RESIDENTIAL DECKS B-4

Development Services
Building Division
1635 Faraday Avenue
760-602-2719
www.carlsbadca.gov

A Building Permit is required for residential decks more than 30 " above grade. This hand out describes what plans are necessary to secure a deck permit. To assist you, there is a sample of a plot plan, span tables for joists, girders, and beams, and there is a footing schedule for foundation requirements. There are also connection details to use for typical connections. If you design the deck yourself, or if your deck is free-standing or outside the table limits in this handout, please provide a foundation plan, framing details, and other details and elevations to show the extent of the proposed work. A complete structural analysis may be required for decks outside the scope of this handout.

If you use the attached tables and plans please submit:

1. **Two Identical Site Plans showing:**
    a. Property lines with dimensions.
    b. Proposed deck and stairway (if applicable).
    c. Distances from posts to property lines.
    d. All existing structures on the property.
    e. Indicate the dimensions of the deck and the total deck square footage.
    f. Any easements on the property.

2. **A Building Permit Application with the following:**
    a. Name of the property owner.
    b. Home Phone Number
    c. Site address, assessor's parcel number, lot number, subdivision name or number.
    d. Contractor's name, State License Number and City Business License Number; or an Owner-Builder Declaration Form (Available at the Building Division Counter).
    e. Signature of Applicant

If you are applying for a building permit in a subdivision with a homeowner's association, you should secure architectural review prior to proceeding with the project. The City does not enforce or specifically review provisions of homeowners' association CC&R's. HOA requirements may be different than City requirements.

If you are applying for a building permit in the Coastal Zone, you may need a Coastal Development Permit or an exemption. Contact the Planning Division for details. A Coastal Zone map is part of this handout. If you are applying for a building permit in a subdivision with a homeowner's association, you should secure architectural review prior to proceeding with the project. The City does not enforce or specifically review provisions of homeowners' association CC&R's. HOA requirements may be different than City requirements. If your home is part of a Planned Unit Development or a condominium, please see text of this handout.

SETBACKS FOR R-1 PARCELS

FRONT YARD - 20' from front property line

INTERIOR SIDE YARD - 10% of lot width up to a maximum of 10'

STREET SIDE YARD - 10'

REAR YARD - 20% of lot width up to maximum of 20 feet

MAX. LOT COVERAGE - 40%

Contact the Planning Department for information on corner lots or lots with unusual configurations and for information on Planned Communities, accessory structures, and building heights.

The telephone number for the Planning Department is 602-4610.

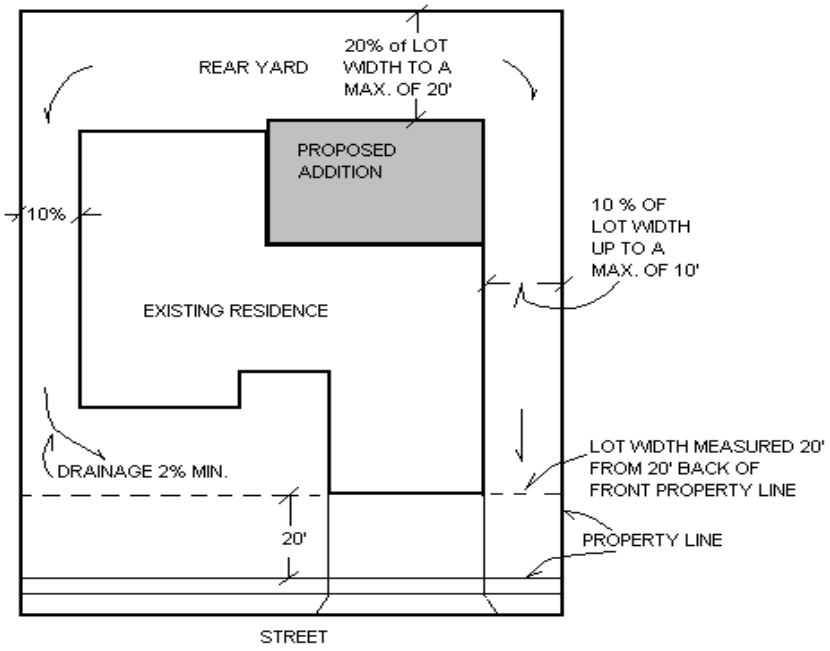

Minimum Square **Footing Sizes** (inches)[1,2]

Post Spacing	Joist Span (in feet)							
	4	6	8	10	12	14	16	18
4	12	14	16	18	20	20	22	24
6	14	16	20	22	24	24	28	30
8	16	20	22	24	26	28	30	32
10	18	22	24	28	30	32	34	36
12	20	24	28	32	32	36	36	38

1. Assumes 1,000 psf soil bearing capacity
2. The minimum depth for all footings is 12 inches into natural grade

Allowable **Joist Sizes**

Joist Span Douglas Fir	Joist Span Redwood	Joist Spacing	Size of Joist
6'3" 5'6" 5'0"	6'3" 5'6" 5'0"	12" 16" 24"	2 x 4
9'9" 8'9" 7'9"	9'9" 8'9" 7'9	12" 16" 24"	2 x 6
12'9" 11'9" 10'2'	12'9" 11'9" 10'2"	12" 16" 24"	2 x 8
16'5" 15'0" 13'0"	16'5" 15'0" 13'0"	12" 16" 24"	2 x 10
20'0" 18'0" 15'10"	20'0" 18'0" 15'10"	12" 16" 24"	2 x 12
22'9" 19'9" 16'0"	22'6" 21'0" 17'0"	12" 16" 24"	2 x 14

1. Assumes a live load of 40 psf and a dead load of 8 psf.
2. If joists are within 18" of grade, use pressure treated Douglas Fir-Larch or Foundation Grade Redwood
3. Assume F(b)=825 psi, F9v)=90 psi, and E=1,200,000 psi for D.F. #2
4. Assume F(b)=925 psi, F9v)=80 psi, and E=1,200,000 psi for Redwood

Allowable **Beam Sizes**

Post Spacing	Joist Span (in feet)						
	4	6	8	10	12	14	16
4	4 x 4	4 x 6	4 x 6	4 x 8	4 x 10	4 x 10	4 x 14
6	4 x 6	4 x 8	4 x 8	4 x 10 6 x 8	4 x 10 6 x 8	4 x 14 6 x 10	4 x 14 6 x 12
8	4 x 10 6 x 8	4 x 10 6 x 8	4 x 12 6 x 10	4 x 14 6 x 10	4 x 14 6 x 10	4 x 14 6 x 12	4 x 16 6 x 12
10	4 x 10 6 x 10	4 x 14 6 x 12	4 x 14 6 x 12	4 x 16 6 x 14	4 x 16 6 x 14	4 x 18 6 x 14	6 x 16
12	4 x 10 6 x 10	4 x 14 6 x 12	4 x 14 6 x 12	4 x 16 6 x14	4 x 16 6 x 14	4 x 18 6 x 14	6 x 16

Figure 4/Typical deck elevation looking parallel to rear of dwelling

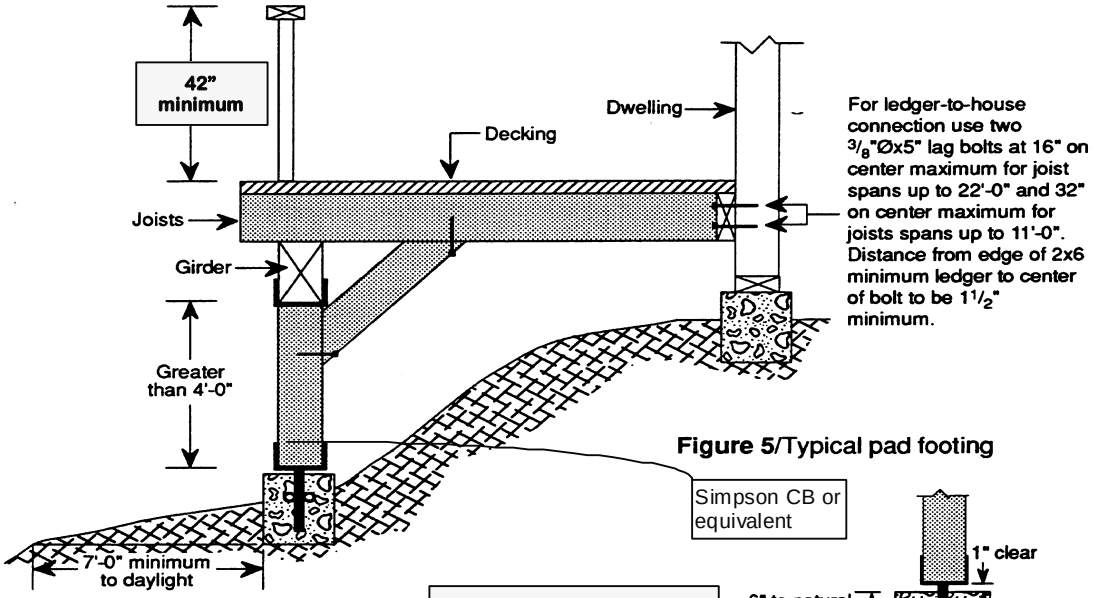

Figure 5/Typical pad footing

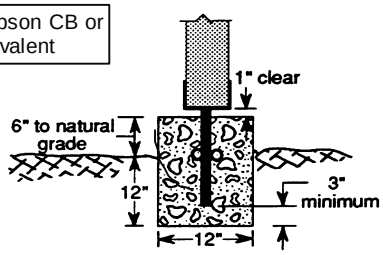

Figure 6/Typical deck elevation facing rear of dwelling

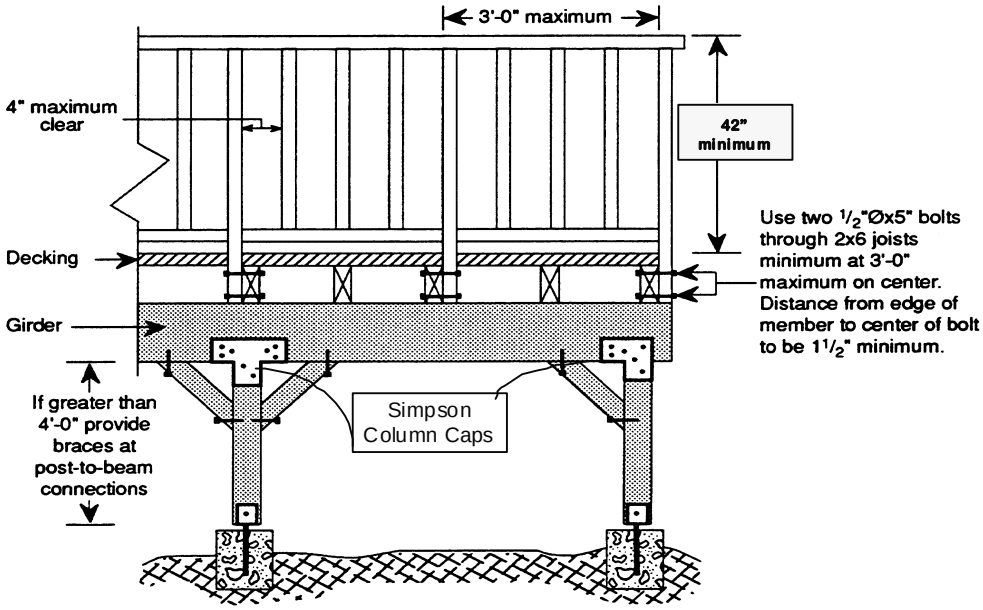

Typical deck

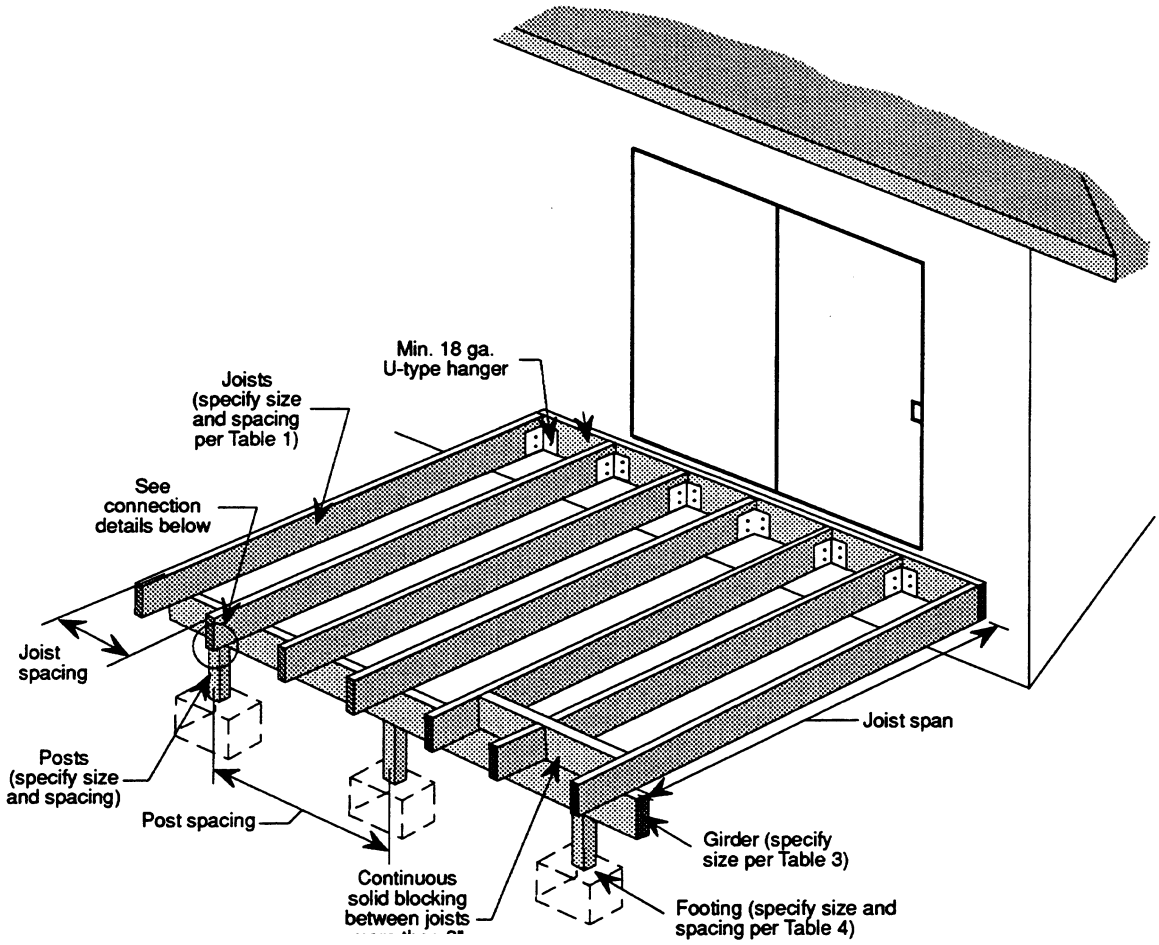

Post-to-girder connection

Case 1/End condition

Case 2/Interior condition

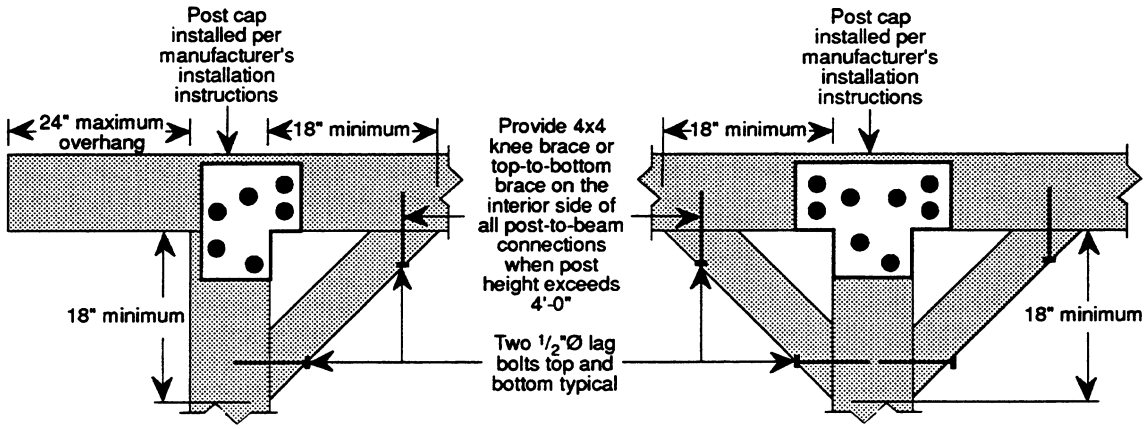

Coastal Zone Boundary

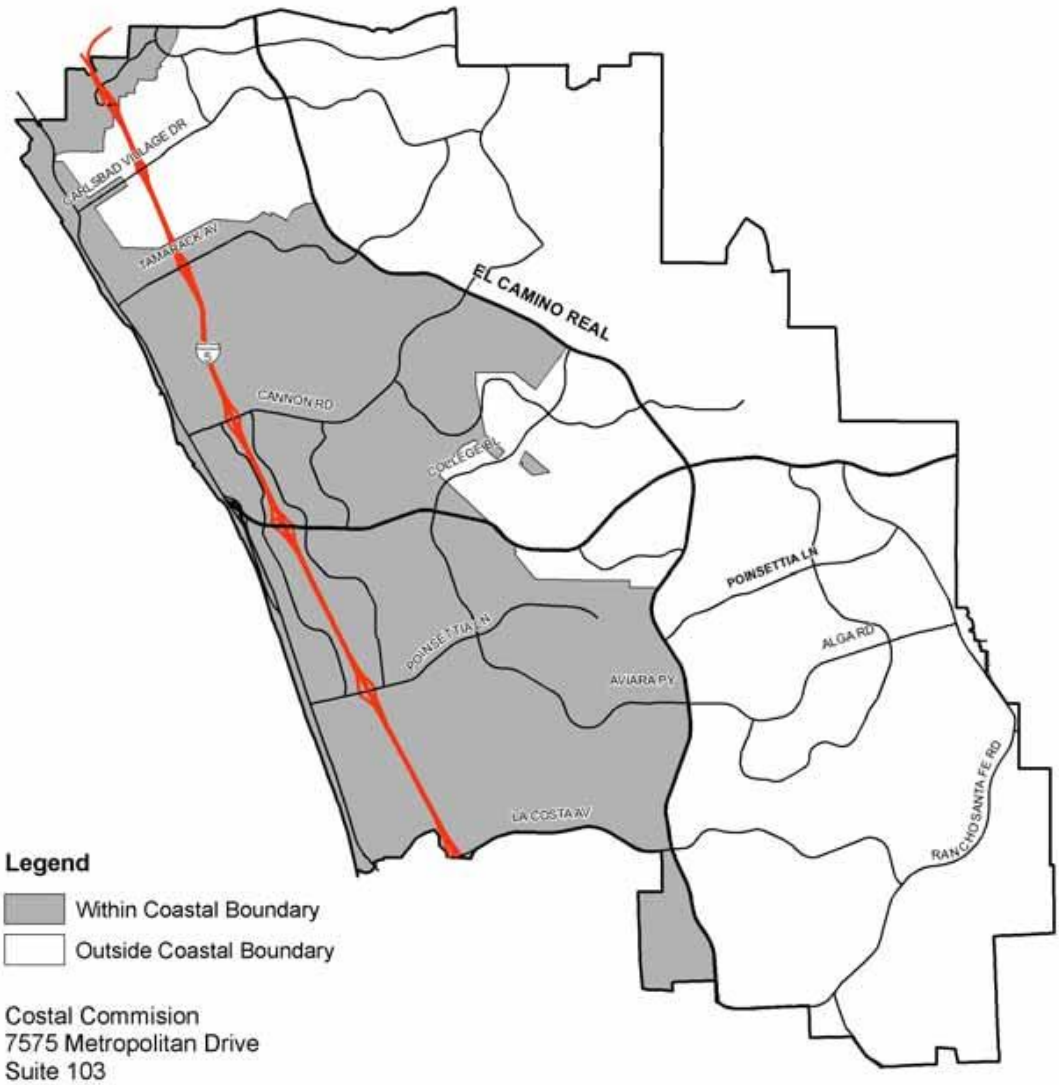

Legend

- Within Coastal Boundary
- Outside Coastal Boundary

Costal Commision
7575 Metropolitan Drive
Suite 103
San Diego, CA 92108-4402
(619) 767-2370

J:\sangis2\productsplanning\167 DB\Coastal Zone Boundary.mxd 1 July 2005