City of Carlsbad

Engineering Standards

Volume 3
Standard Drawings and Specifications

2004 Edition

CITY OF CARLSBAD
ENGINEERING STANDARDS

VOLUME 3 - STANDARD DRAWINGS AND SPECIFICATIONS

TABLE OF CONTENTS

CHAPTER 1 – City of Carlsbad Standard Drawings
CHAPTER 2 – City of Carlsbad Modifications to San Diego Area Regional Standard Drawings
CHAPTER 3 – City of Carlsbad Standard Title Sheets
CHAPTER 4 – Potable and Recycled Water Standard Drawings – Carlsbad Municipal W.D.
CHAPTER 5 – City of Carlsbad Sample Drawings
CHAPTER 6 – City of Carlsbad Construction Specifications

REVISIONS/ADDENDUM		
CHAPTER/ PAGE/DWG.	**ITEM**	**REVISION DATE**
All Chapters	Revised Water & Sewer Standard Drawings & Specifications	6/30/08
Chapter 3	Revised Recycled Water Title Sheet	3/17/09
Chapter 1	Revised GS-1, GS-1A, GS-3, GS-4, added GS-1B	11/30/09
Chapter 6	Revised Section 15064	11/30/09
Chapter 1	Revised GS-25, added GS-26, GS-27, GS-28, GS-29	2/10/10
Chapter 1	Revised DS-1, GS-6, GS-6A, GS-18, GS-19, GS-24, S-1, S-1A	2/21/12
Chapter 4	Revised W-20, W-21, added W-35	2/21/12
Chapter 6	Revised Section 15139	12/20/13

CITY OF CARLSBAD
ENGINEERING STANDARDS

VOLUME 3 - STANDARD DRAWINGS AND SPECIFICATIONS

CHAPTER 1 – CITY OF CARLSBAD STANDARD DRAWINGS

TABLE OF CONTENTS

DWG NO.

Drainage Improvements

DS-1	Local Depression
DS-2	(blank)
DS-3	Temporary Desiltation Basin Outlet and Capacity Table
DS-4	Brow Ditch Debris Rack
DS-5	Concrete Pipe Collar
DS-6	(blank)
DS-7	(blank)
DS-8	(blank)
DS-9	Connection to Curb Inlet

General Surface Improvements

GS-1	Standard Street Width
GS-1A	Hillside Street
GS-1B	Cul-de-Sac Street Width
GS-2	Standard Knuckle
GS-3	Concentric Cul-de-Sac
GS-4	Offset Cul-de-Sac
GS-5	Temporary Turn-Around at Dead-End Street
GS-6	Location of Underground Utilities (continuous sidewalk)
GS-6A	Location of Underground Utilities (non-contiguous sidewalk)
GS-7	(blank)
GS-8	Parkway Tree Planting
GS-9	Special Cross-Gutter (Steep Grades)
GS-10	Graph for Special Cross-Gutter
GS-11	Median Taper and Nose Flare
GS-12	Typical Driveway Addition
GS-13	Typical Building Pad Construction BMP Requirements
GS-14	Grading of Slopes and Required Setbacks
GS-15	Typical Finished Lot Grading
GS-16	Refuse Bin Enclosure
GS-17	Structural Section of Streets and Alleys
GS-18	Median Curb
GS-19	Painted Curb Address
GS-20	Alley Type Driveway
GS-21	Pull-Box for Traffic Signal and Street Lighting
GS-22	(blank)
GS-23	(blank)
GS-24	Narrow Trench Backfill & Asphalt Concrete Resurfacing
GS-25	Trench Resurfacing Asphalt Concrete Pavement For Trench Widths Less Than 25”
GS-26	Trench Resurfacing Asphalt Concrete Pavement For Trench Widths From 26” To 48”

DWG NO.

GS-27	Trench Resurfacing Asphalt Concrete Pavement For Trench Widths Greater Than 48”
GS-28	Notes for Asphalt Concrete Trench Resurfacing
GS-29	Exploratory Utility Pothole Backfill & Resurfacing (Diam ≤ 8 in)
GS-32	General Notes for Pedestrian Ramps

Sewer Improvements

S-1 ..... Standard Sewer Manhole
S-1A..... PVC Lined Manhole
S-2 ..... Drop Manhole
S-3 ..... Shallow Manhole
S-4 ..... Manhole Frame and Cover
S-5 ..... Pipe Bedding and Trench Backfill for Sewers
S-6 ..... Sewer Main Cleanout
S-7 ..... Sewer Lateral
S-8 ..... Sewer Lateral (Deep Cut)
S-9 ..... Manhole Marker Post

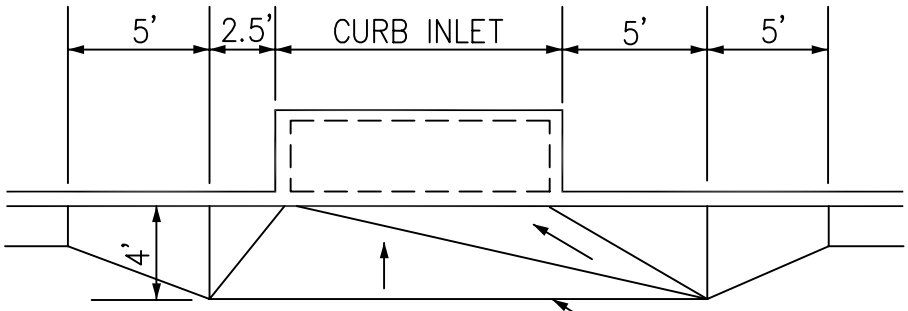

PLAN

MEET EXISTING PAVEMENT OR STREET GRADE

CONTINUOUS GRADE

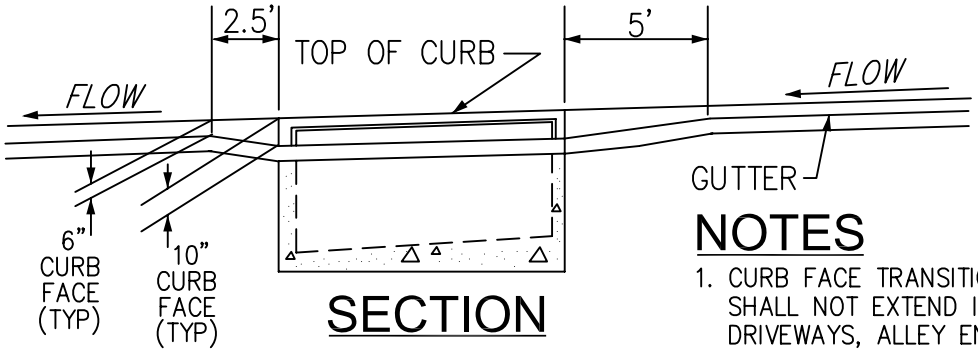

SECTION

NOTES

1. CURB FACE TRANSITIONS AND WARP AREAS SHALL NOT EXTEND INTO CURB RETURNS, DRIVEWAYS, ALLEY ENTRANCES, OR ANY OTHER CURB OPENING. DEPRESSION SHALL BE 4".
2. FOR USE ONLY WITH SPECIFIC CITY ENGINEER APPROVAL.

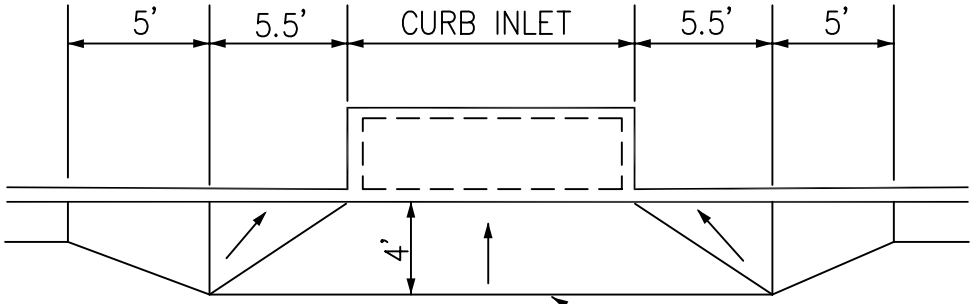

PLAN

MEET EXISTING PAVEMENT OR STREET GRADE

SUMP CONDITION

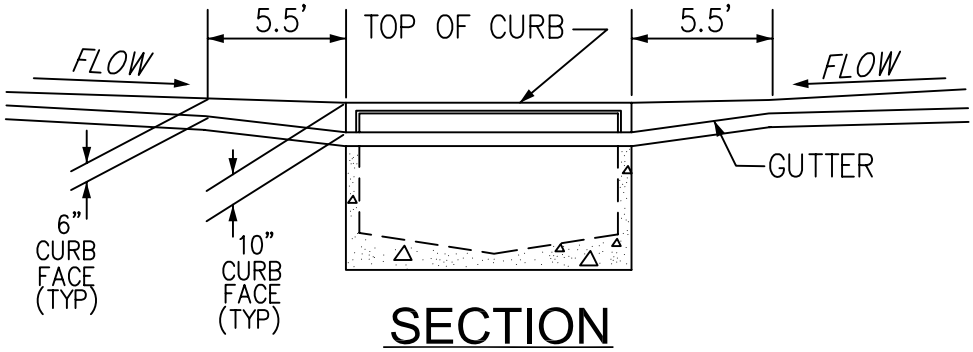

SECTION

REV.	APPROVED	DATE	CITY OF CARLSBAD	
			LOCAL DEPRESSION	Glen R. Van Patti — CITY ENGINEER — 12/11 DATE
				SUPPLEMENTAL STANDARD NO. DS-1

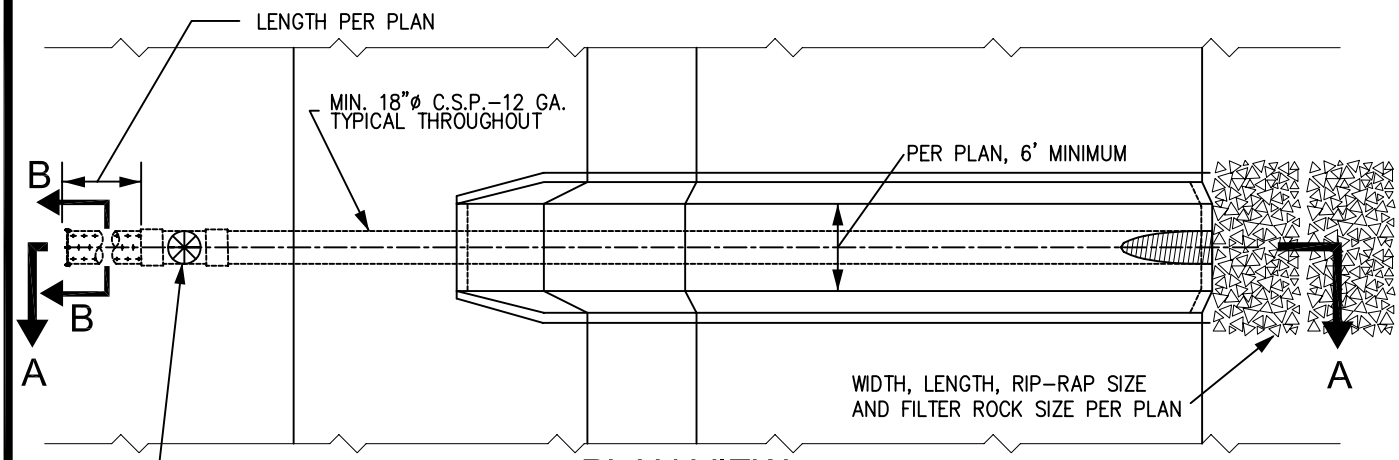

PLAN VIEW
NTS

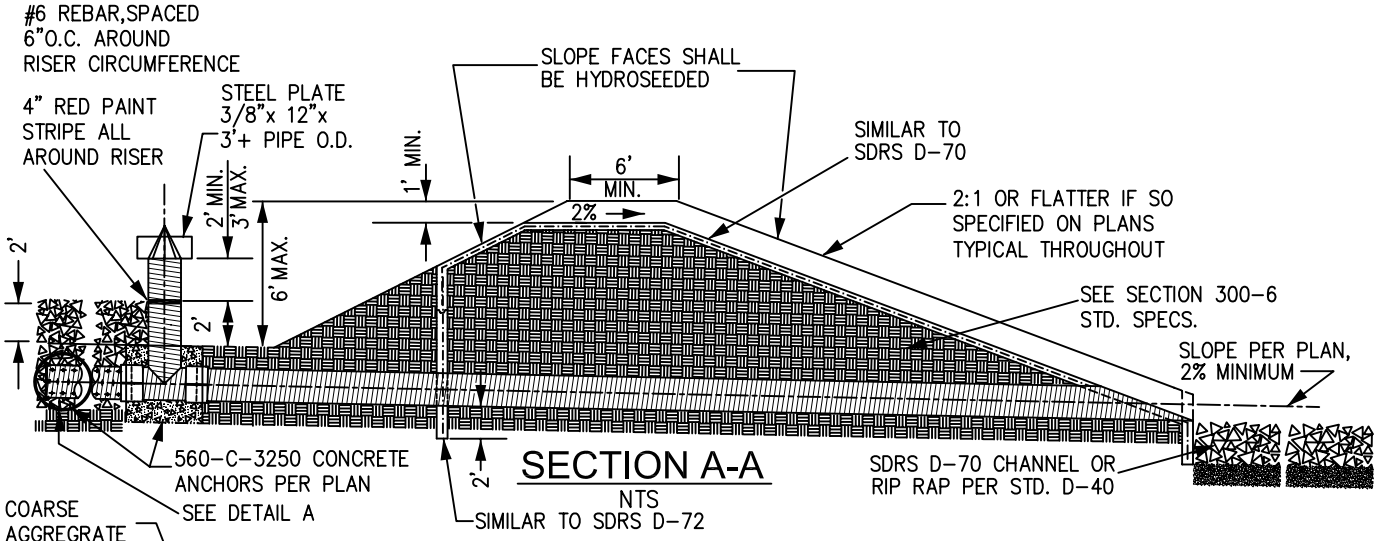

SECTION A-A
NTS

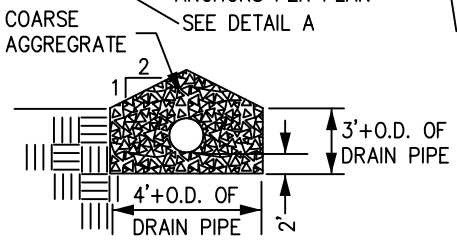

SECTION B-B
NTS

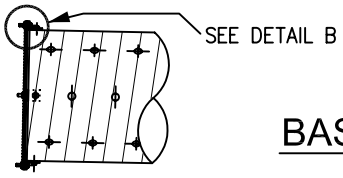

DETAIL A
NTS

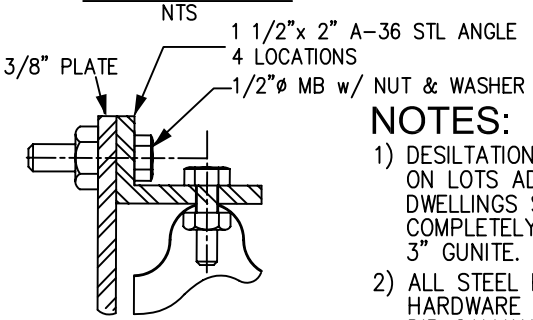

DETAIL B
NTS

NOTES:

1) DESILTATION BASINS BUILT ON LOTS ADJACENT TO DWELLINGS SHALL BE COMPLETELY LINED WITH 3" GUNITE.
2) ALL STEEL PIPE AND HARDWARE TO BE HOT DIP GALVANIZED AFTER FABRICATION.

BASIN CAPACITY TABLE
(IN CUBIC YARDS)

TRACT AREA (ACRES)	AVERAGE SLOPES					
	2%	5%	8%	10%	12%	15%
10	270	350	370	400	450	500
15	400	420	460	600	675	750
20	540	700	740	800	900	1000
40	1080	1400	1480	1600	1800	2000
80	2160	2800	2960	3200	3600	4000
100	2700	3500	3700	4000	4500	5000
150	4000	4200	4600	6000	6750	7500
200	5400	7000	7400	8000	9000	10000

REV.	APPROVED	DATE

CITY OF CARLSBAD

TEMPORARY
DESILTATION BASIN OUTLET
AND CAPACITY TABLE

6-04
CITY ENGINEER DATE

SUPPLEMENTAL STANDARD NO. DS-3

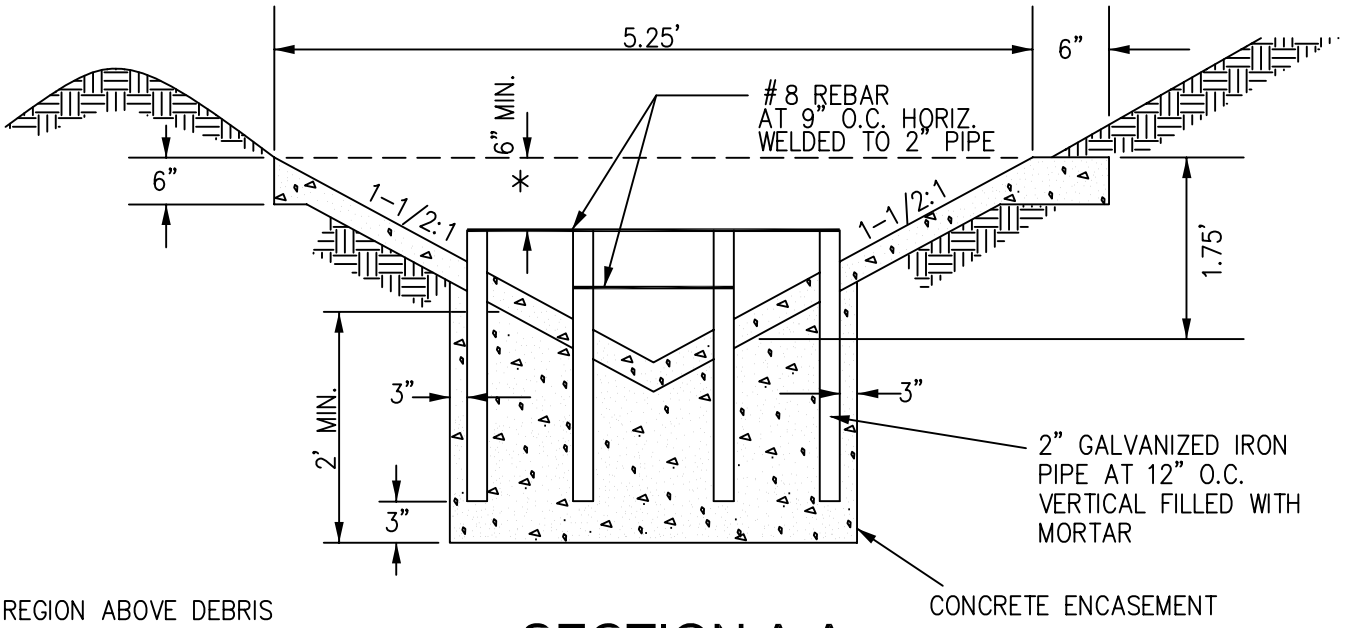

* REGION ABOVE DEBRIS RACK SHALL HAVE AN AREA SUFFICIENT TO PASS THE DESIGN FLOW

SECTION A-A

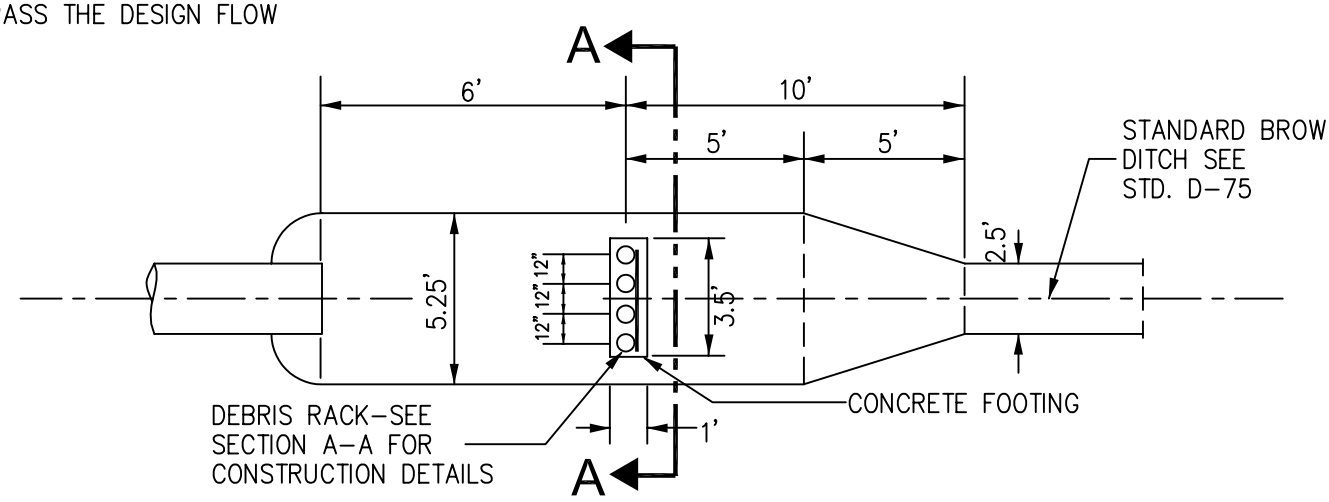

PLAN

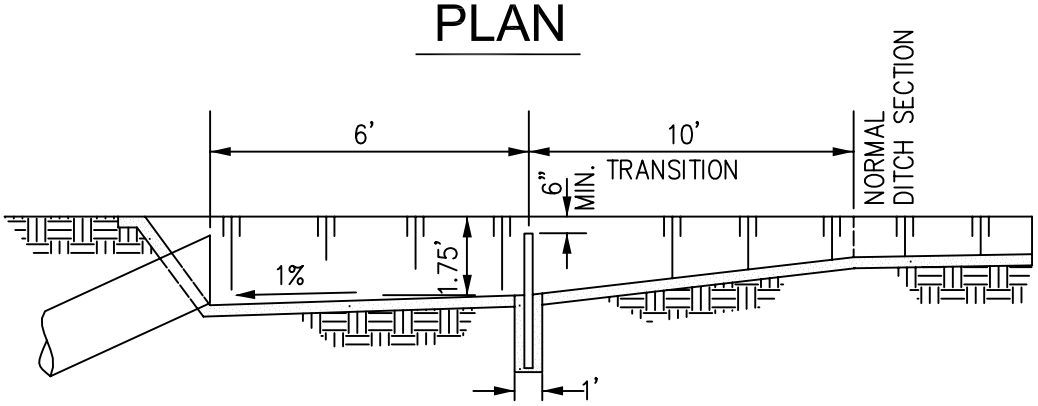

ELEVATION

REV.	APPROVED	DATE	CITY OF CARLSBAD	
			BROW DITCH DEBRIS RACK	CITY ENGINEER 6-04 DATE
				SUPPLEMENTAL STANDARD NO. DS-4

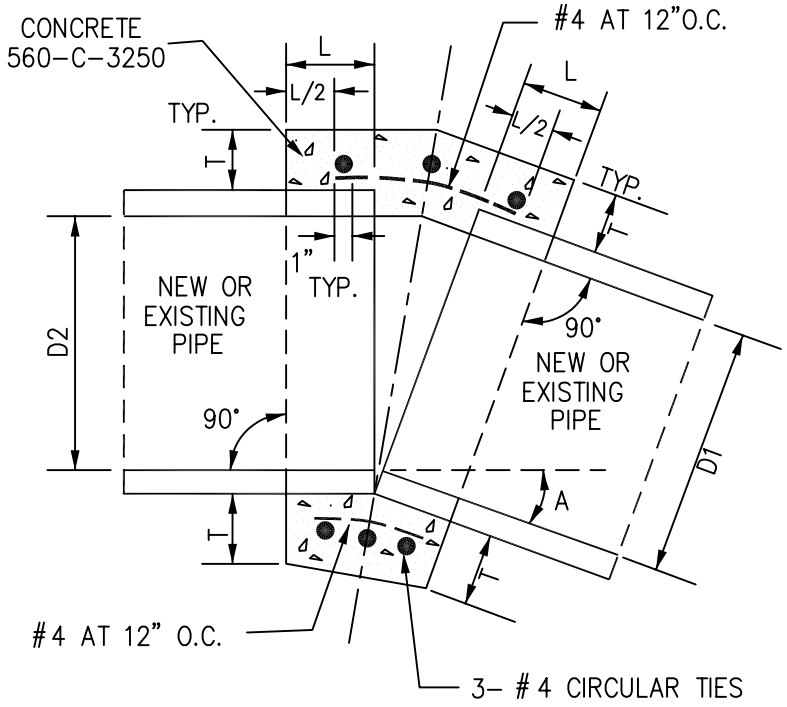

D	L	T
12"	1'-0"	4"
18"	1'-0"	5"
24"	1'-0"	6"
36"	1'-6"	8"
48"	1'-6"	10"
57"	1'-6"	10"
60"	1'-9"	11"
66"	1'-9"	11"

NOTES:

1). A CONCRETE COLLAR IS REQUIRED WHERE THE CHANGE IN GRADE EXCEEDS 0.10 FT. PER FT.

2). WHERE PIPES OF DIFFERENT DIAMETERS ARE JOINED WITH A CONCRETE COLLAR, L AND T SHALL BE THOSE OF THE LARGER PIPE. D=D1 OR D2 WHICHEVER IS GREATER.

3). FOR PIPES LARGER THAN 66" A SPECIAL COLLAR DETAIL IS REQUIRED.

4). FOR PIPE SIZE NOT LISTED USE NEXT SIZE LARGER.

5). OMIT REINFORCING ON PIPES 24" AND LESS IN DIAMETER AND ON ALL PIPES WHERE ANGLE A IS LESS THAN 10°.

6). WHERE REINFORCING IS REQUIRED THE DIAMETER OF THE CIRCULAR TIES SHALL BE D+(2xWALL THICKNESS)+8".

7). WHEN D1 IS EQUAL TO OR LESS THAN D2, JOIN INVERTS AND WHEN D1 IS GREATER THAN D2 JOIN SOFFITS.

8). PIPE MAY BE CORRUGATED METAL PIPE, CONCRETE PIPE OR REINFORCED CONCRETE PIPE.

REV.	APPROVED	DATE

CITY OF CARLSBAD

CONCRETE PIPE COLLAR
FOR PIPES 12" THROUGH 66"

CITY ENGINEER — DATE 6-04

SUPPLEMENTAL STANDARD NO. DS-5

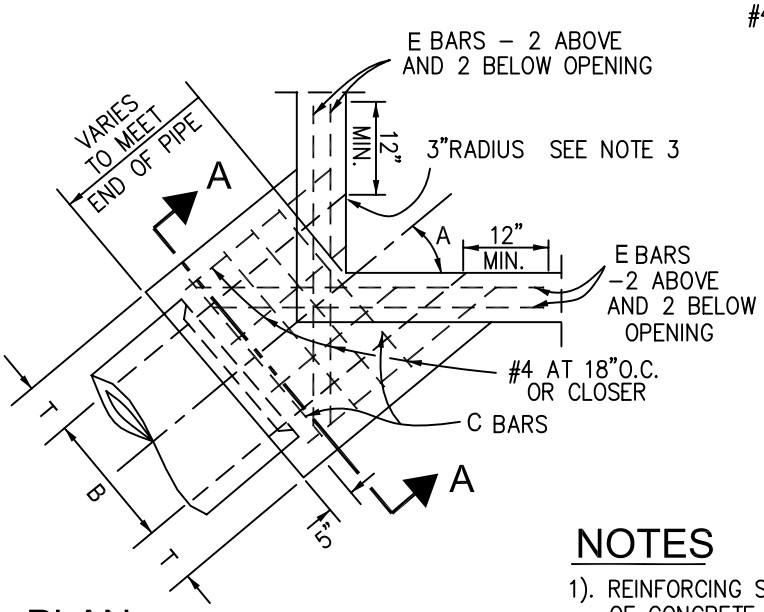

PLAN
CORNER CONNECTION

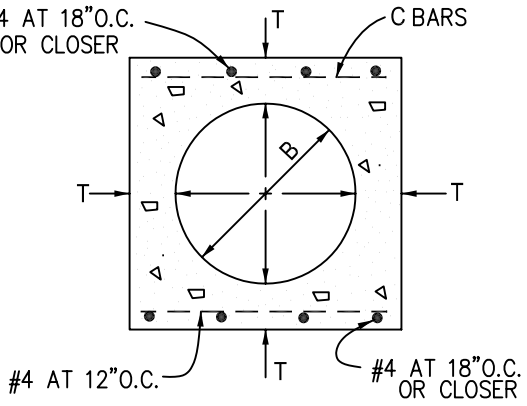

SECTION A-A

NOTES

1). REINFORCING STEEL SHALL BE 1–1/2" CLEAR FROM FACE OF CONCRETE UNLESS OTHERWISE SHOWN.
2). REINFORCING STEEL FOR INSIDE FACE OF CURB INLET BASIN SHALL BE CUT AT CENTER OF OPENING AND BENT INTO WALLS OF MONOLITHIC CONNECTION. REINFORCING STEEL FOR OUTSIDE FACE OF CATCH BASIN WALL SHALL BE CUT 2" CLEAR OF OPENING.
3). CONNECTION SHALL BE POURED MONOLITHIC WITH CURB INLET. THE ROUNDED EDGE OF OUTLET SHALL BE CONSTRUCTED BY POURING CONCRETE AGAINST A CURVED FORM WITH A RADIUS OF 3".
4). FLOOR OF STRUCTURE SHALL BE STEEL–TROWELED TO SPRING LINE.
5). CONNECTIONS SHALL BE CONSTRUCTED WHEN:
   A) PIPES, 12" THROUGH 72" IN DIAMETER, INLET OR OUTLET THROUGH CORNER OF CURB INLET.
   B) ANGLE A, FOR PIPES 24" THROUGH 30" IN DIAMETER, IS 70°OR LESS.
   C) PIPES, 33" THROUGH 72" IN DIAMETER, INLET OR OUTLET THROUGH THE SIDE WALL OF CURB INLET.
6). ALL CONCRETE SHALL BE TYPE 560–C–3250.

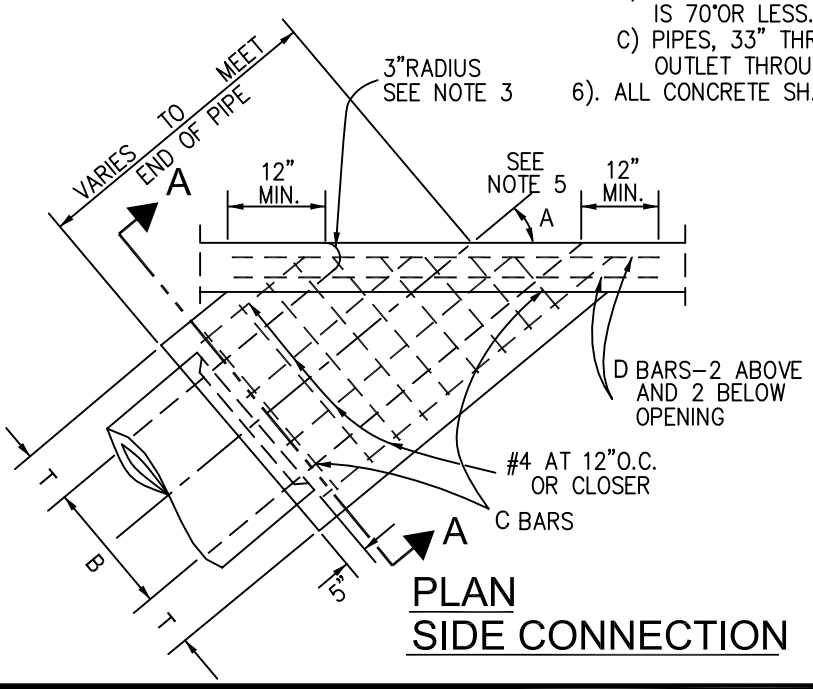

PLAN
SIDE CONNECTION

B	T	C BARS	D AND E BARS
12"	4"	#4 AT 6" O.C.	#5
15"	4–1/4		
18"	4–1/2		
21"	5"		
24"	5–1/4		
27"	5–1/2		
30"	6"		
33"	6–1/4		
36"	6–1/2		
39"	7"		

B	T	C BARS	D AND E BARS
42"	7–1/2	#5 AT 6" O.C.	#6
45"	7–3/4		
48"	8"		
51"	8–1/2		
54"	9"		
57"	9–1/4		
60"	9–1/2		
63"	10"		
66"	10–1/4		
69"	10–3/4		
72"	11"		

REV.	APPROVED	DATE	CITY OF CARLSBAD	
			CONNECTION TO CURB INLET FOR PIPES 12" THROUGH 72"	6–04 CITY ENGINEER DATE
				SUPPLEMENTAL STANDARD NO. DS-9

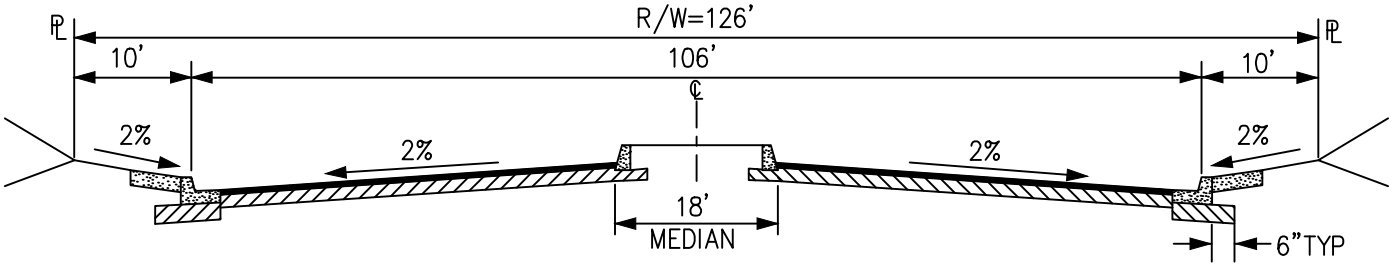

PRIME ARTERIAL STREET

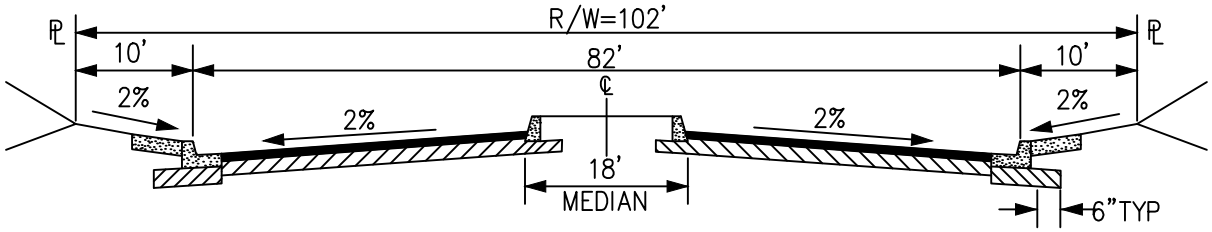

MAJOR ARTERIAL STREET

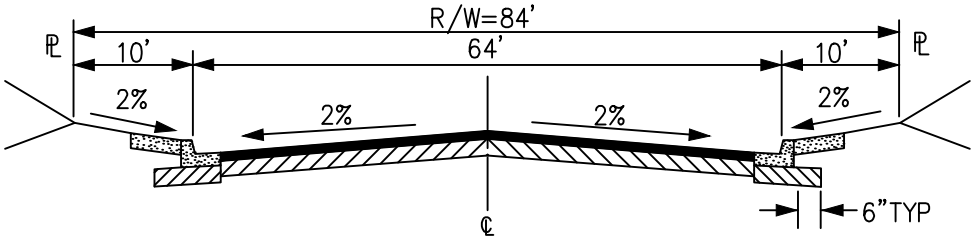

SECONDARY ARTERIAL STREET

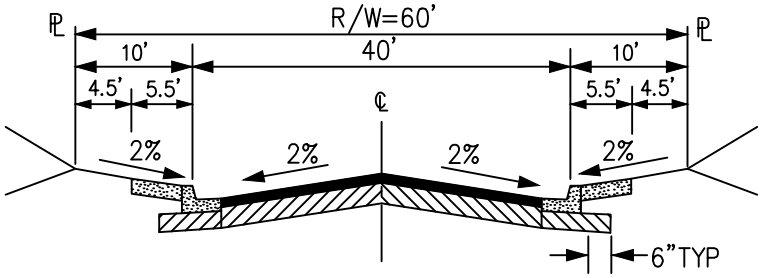

COLLECTOR STREET

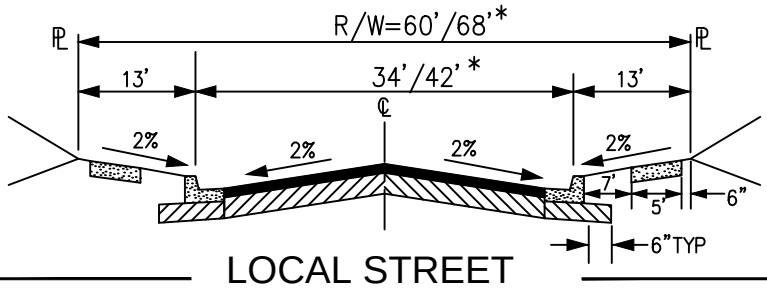

* USE WIDER DIMENSIONS WHERE ANY PORTION OF ADJACENT LOTS CONTAIN A FIRE HAZARD ZONE/FIRE SUPPRESSION ZONE

LOCAL STREET

REV.	APPROVED	DATE	CITY OF CARLSBAD	Robert T. Johnson Jr.	11/09
			STANDARD STREET WIDTHS	CITY ENGINEER	DATE
				SUPPLEMENTAL STANDARD NO.	GS-1

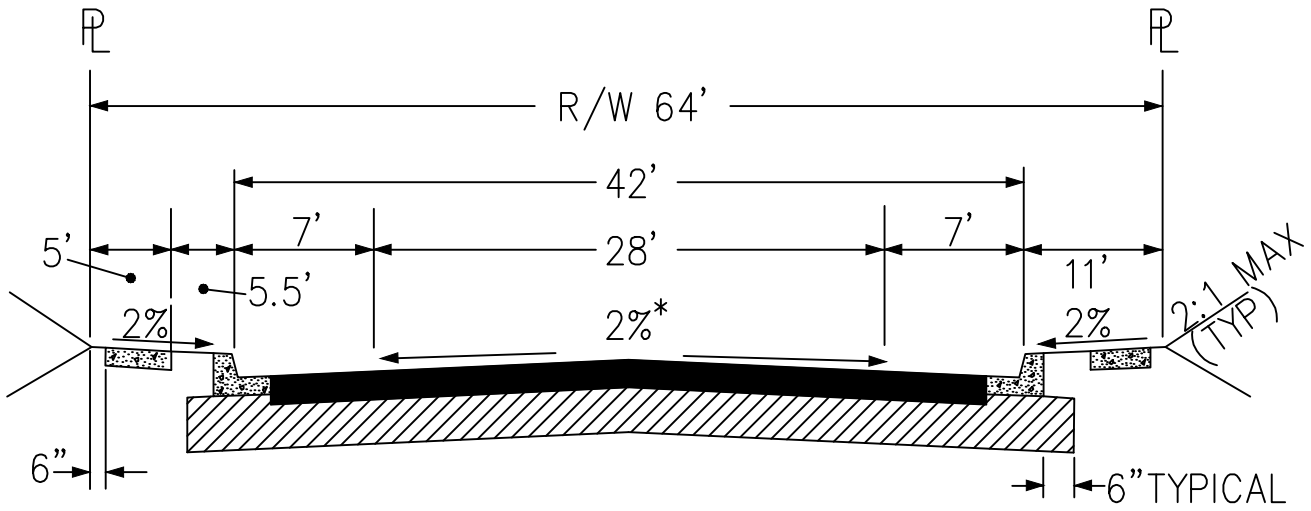

* CROSS SLOPE MAY VARY TO MEET DESIGN PARAMETERS. GRADE DIFFERING FROM TYPICAL 2% SHALL RECEIVE PRIOR APPROVAL FROM THE CITY ENGINEER.

REV.	APPROVED	DATE	CITY OF CARLSBAD	Robert T. Johnson Jr.	11/09
			HILLSIDE STREET	CITY ENGINEER	DATE
				SUPPLEMENTAL STANDARD NO.	GS-1A

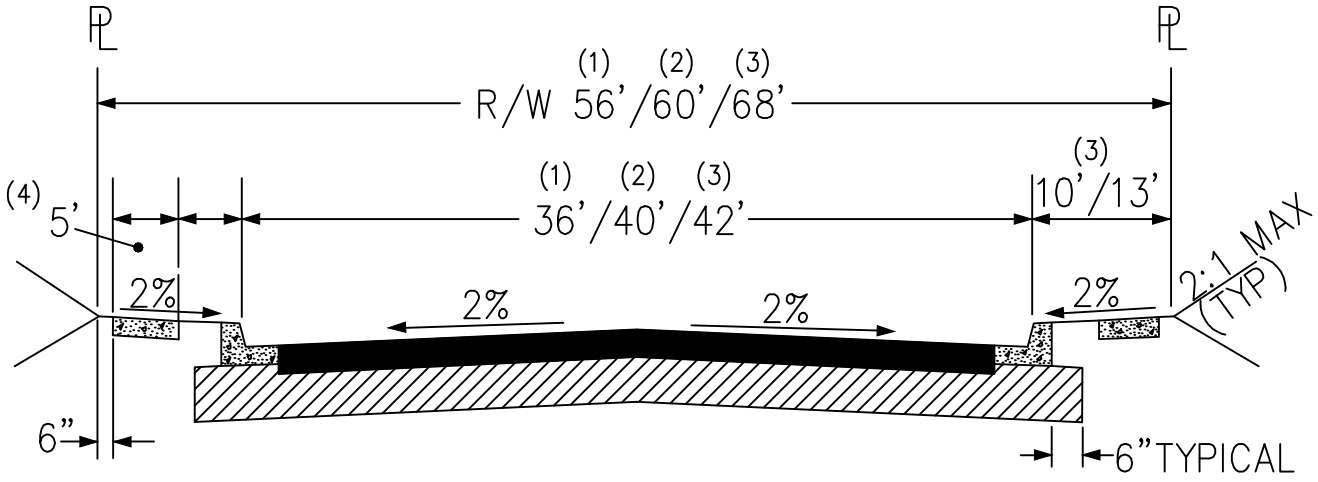

(1) FOR CUL-DE-SACS SERVING 20 LOTS OR LESS.

(2) FOR CUL-DE-SACS SERVING MORE THAN 20 AND UP TO 50 LOTS. AUTOMATIC FIRE SPRINKLERS SYSTEMS REQUIRED.

(3) WHERE ANY OF THE ADJACENT LOTS CONTAIN A PORTION OF A FIRE HAZARD/FIRE SUPPRESSION ZONE, A 28-FOOT CLEAR TRAVEL WAY IS REQUIRED.

(4) SIDEWALK TO BE ADJACENT TO CURB AROUND BULB OF CUL-DE-SAC TO PROVIDE 5-FOOT CLEAR BEHIND CURB FOR FIRE DEPARTMENT EQUIPMENT.

REV.	APPROVED	DATE	CITY OF CARLSBAD	Robert T. Johnson Jr.	11/09
			CUL-DE-SAC STREET WIDTHS	CITY ENGINEER	DATE
				SUPPLEMENTAL STANDARD NO.	GS-1B

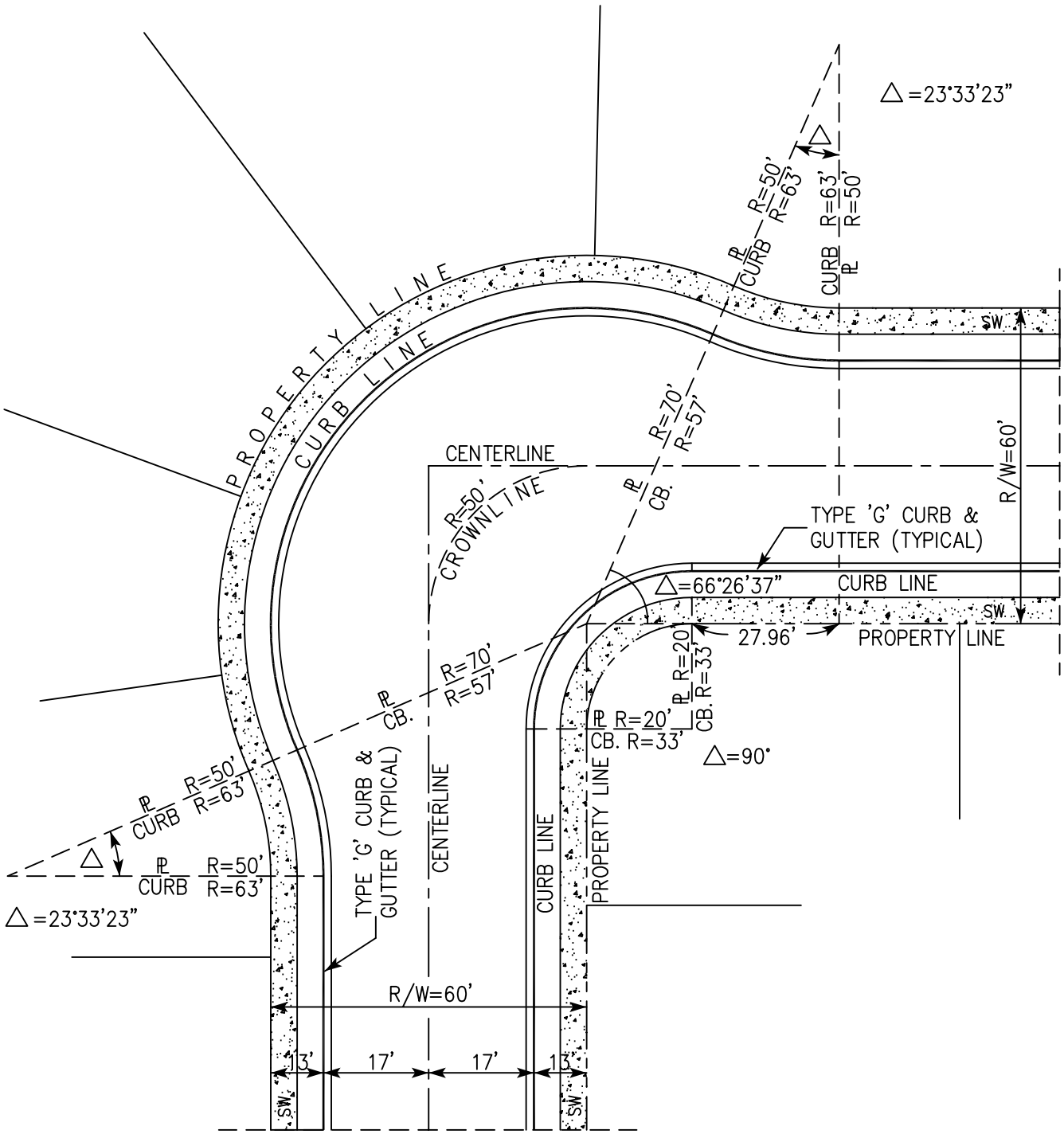

PLAN

NOTE: MINIMUM 1.0% ON ALL HORIZONTAL CURVE GRADES

REV.	APPROVED	DATE	CITY OF CARLSBAD	
			STANDARD KNUCKLE	CITY ENGINEER — DATE 6-04
				SUPPLEMENTAL STANDARD NO. GS-2

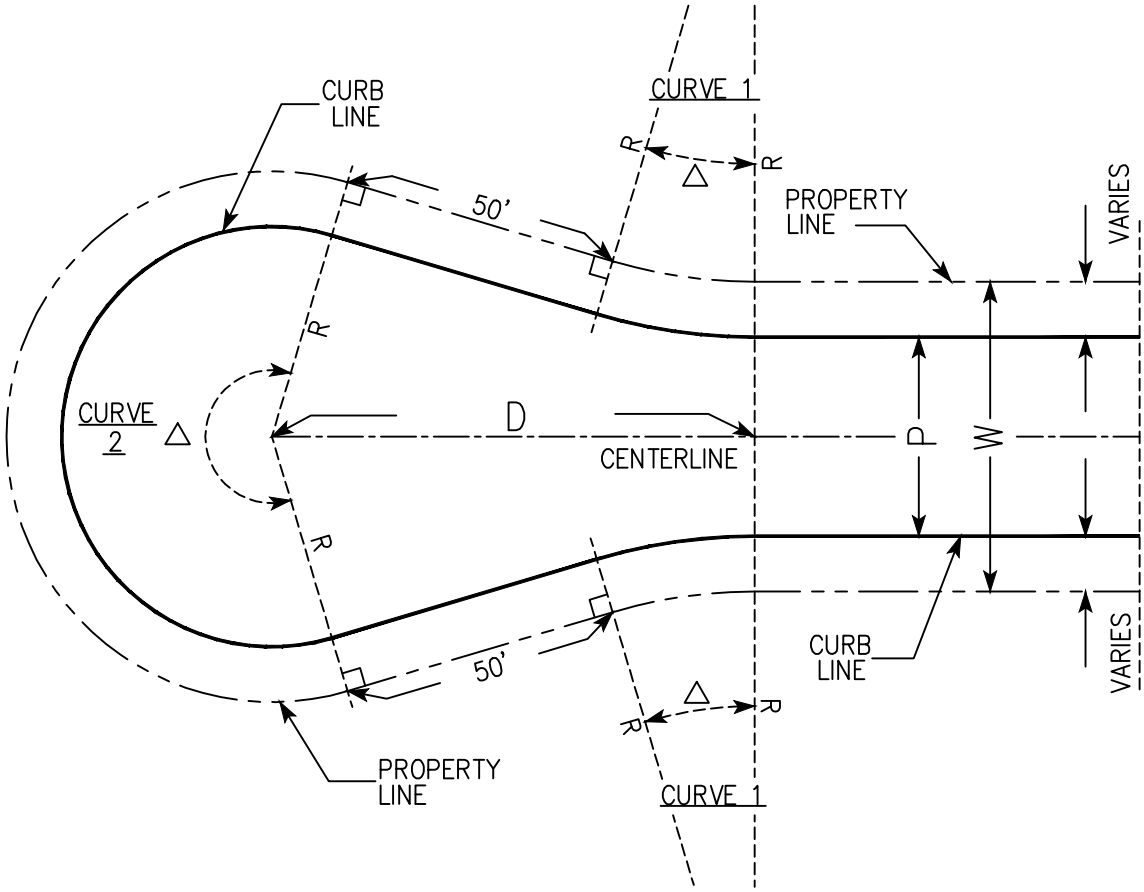

PLAN

CURVE 1				CURB		PROP. LINE	
W	P	D	Δ	R	L	R	L
56'	36'	93.49'	18° 59' 27"	100'	33.15'	90'	29.83'
60'	36'	93.49'	18° 59' 27"	100'	33.15'	88'	29.17'
60'	40'	90.91'	17° 44' 53"	100'	30.98'	90'	27.88'
68'	42'	89.57'	17° 06' 47"	100'	29.87'	87'	25.99'

CURVE 2				CURB		PROP. LINE	
W	P	D	Δ	R	L	R	L
56'	36'	93.49'	217° 58' 54"	42'	159.79'	52'	197.83'
60'	36'	93.49'	217° 58' 54"	42'	159.79'	54'	205.44'
60'	40'	90.91'	215° 29' 46"	42'	157.97'	52'	195.58'
68'	42'	89.57'	214° 13' 34"	42'	157.04'	55'	205.64'

REV.	APPROVED	DATE	CITY OF CARLSBAD	Robert T. Johnson Jr.	11/09
			CONCENTRIC CUL-DE-SAC	CITY ENGINEER	DATE
				SUPPLEMENTAL STANDARD NO.	GS-3

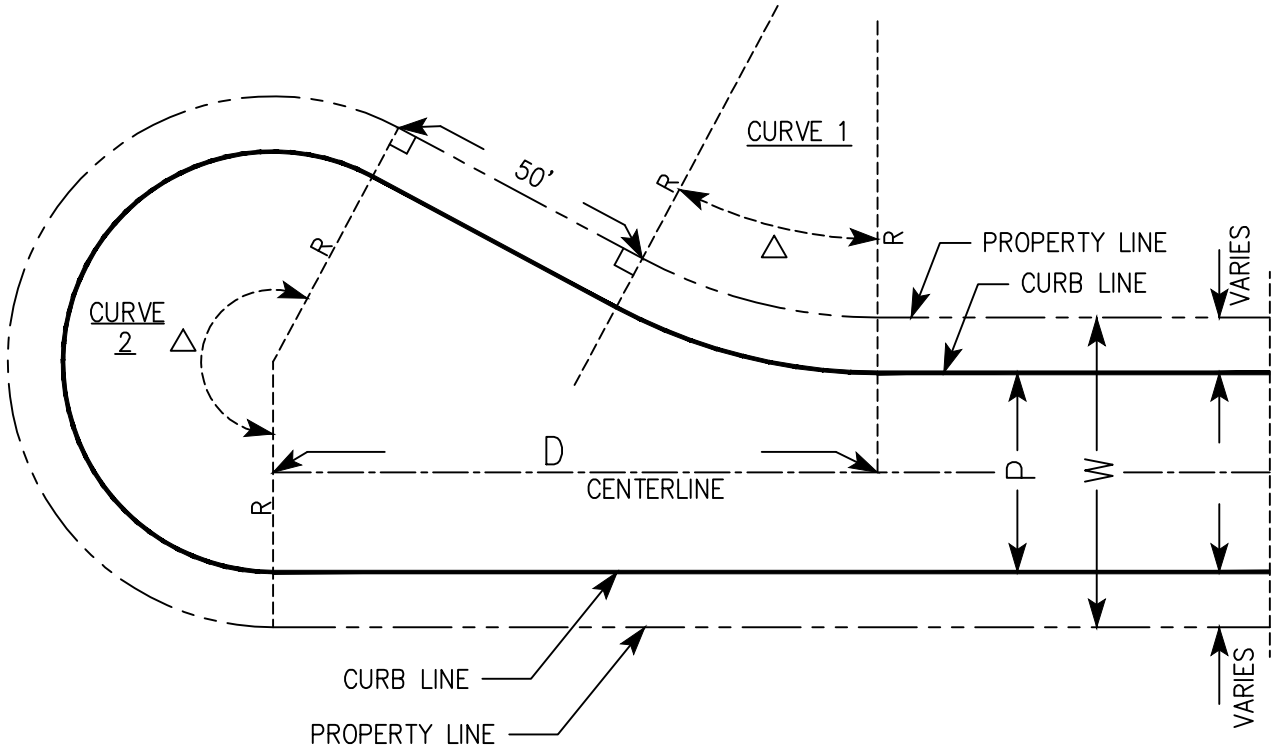

PLAN

CURVE 1			CURB		PROP. LINE	
W	P	△	R	L	R	L
56'	36'	31° 57' 52"	100'	55.79'	90'	50.21'
60'	36'	31° 57' 52"	100'	55.79'	88'	49.09'
60'	40'	29° 59' 16"	100'	52.34'	90'	47.10'
68'	42'	28° 58' 38"	100'	50.57'	87'	44.00'

CURVE 2				CURB		PROP. LINE	
W	P	D	△	R	L	R	L
56'	36'	117.59'	211° 57' 51"	42'	155.38'	52'	192.37'
60'	36'	117.59'	211° 57' 51"	42'	155.38'	54'	199.77'
60'	40'	114.28'	209° 59' 16"	42'	153.93'	52'	190.58'
68'	42'	112.53'	208° 58' 38"	42'	153.19'	55'	200.60'

REV.	APPROVED	DATE	CITY OF CARLSBAD	Robert T. Johnson Jr.	11/09
			OFFSET CUL-DE-SAC	CITY ENGINEER	DATE
				SUPPLEMENTAL STANDARD NO.	GS-4

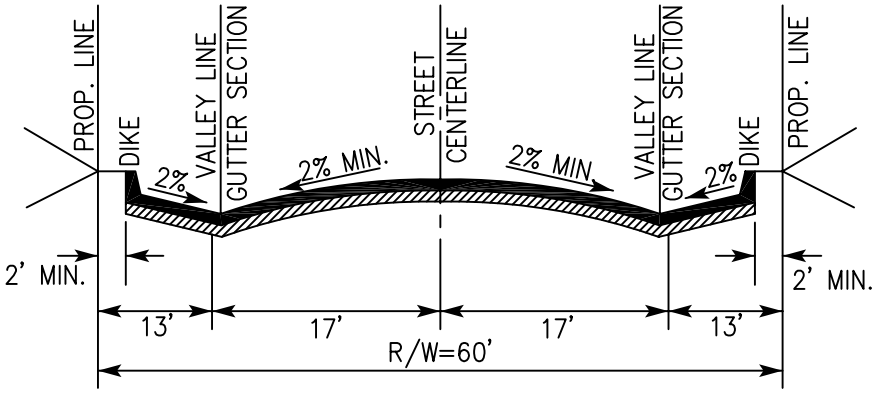

SECTION A-A

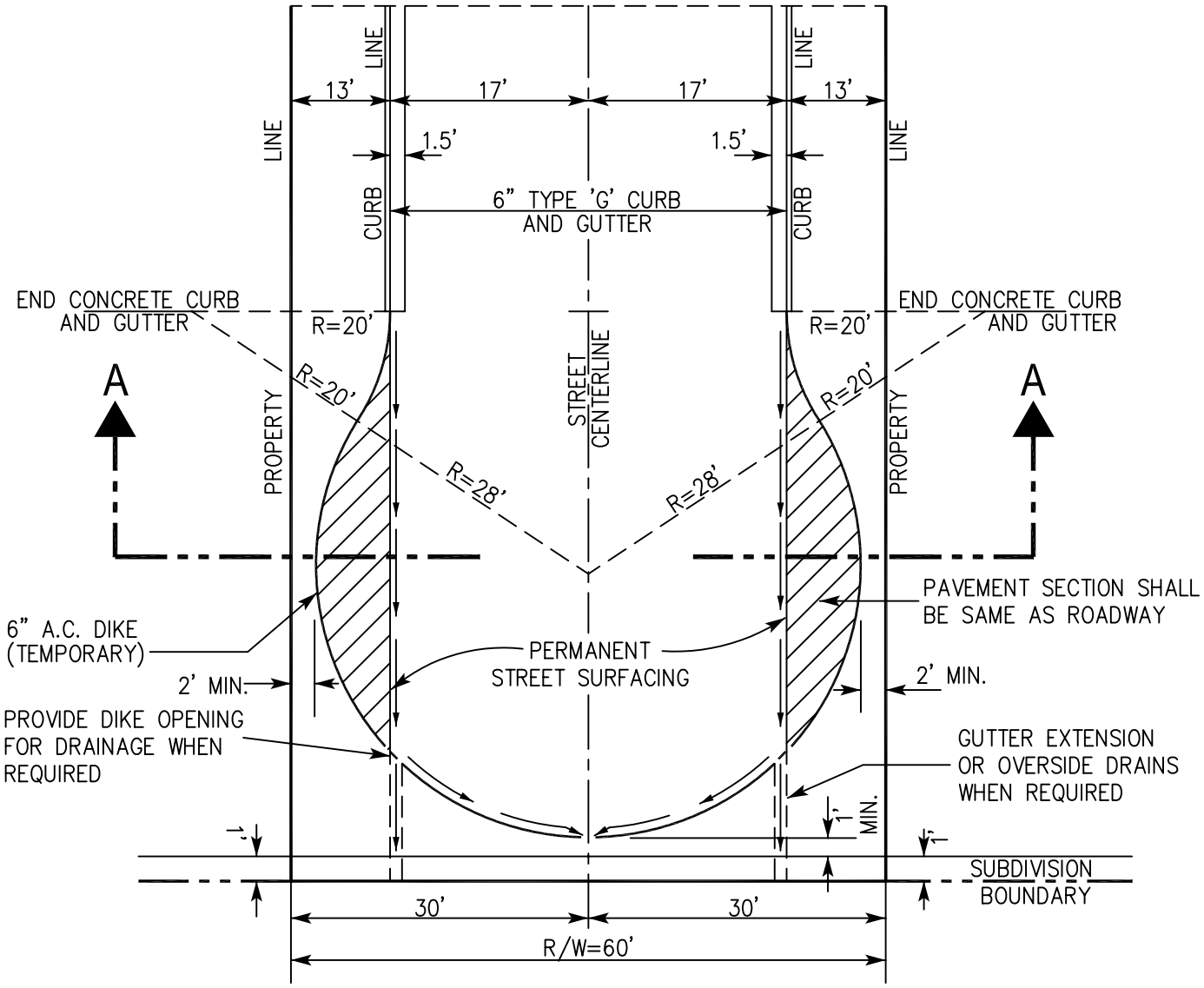

PLAN

REV.	APPROVED	DATE	CITY OF CARLSBAD	
			TEMPORARY TURN-AROUND AT DEAD-END STREET	CITY ENGINEER 6-04 DATE
				SUPPLEMENTAL STANDARD NO. GS-5

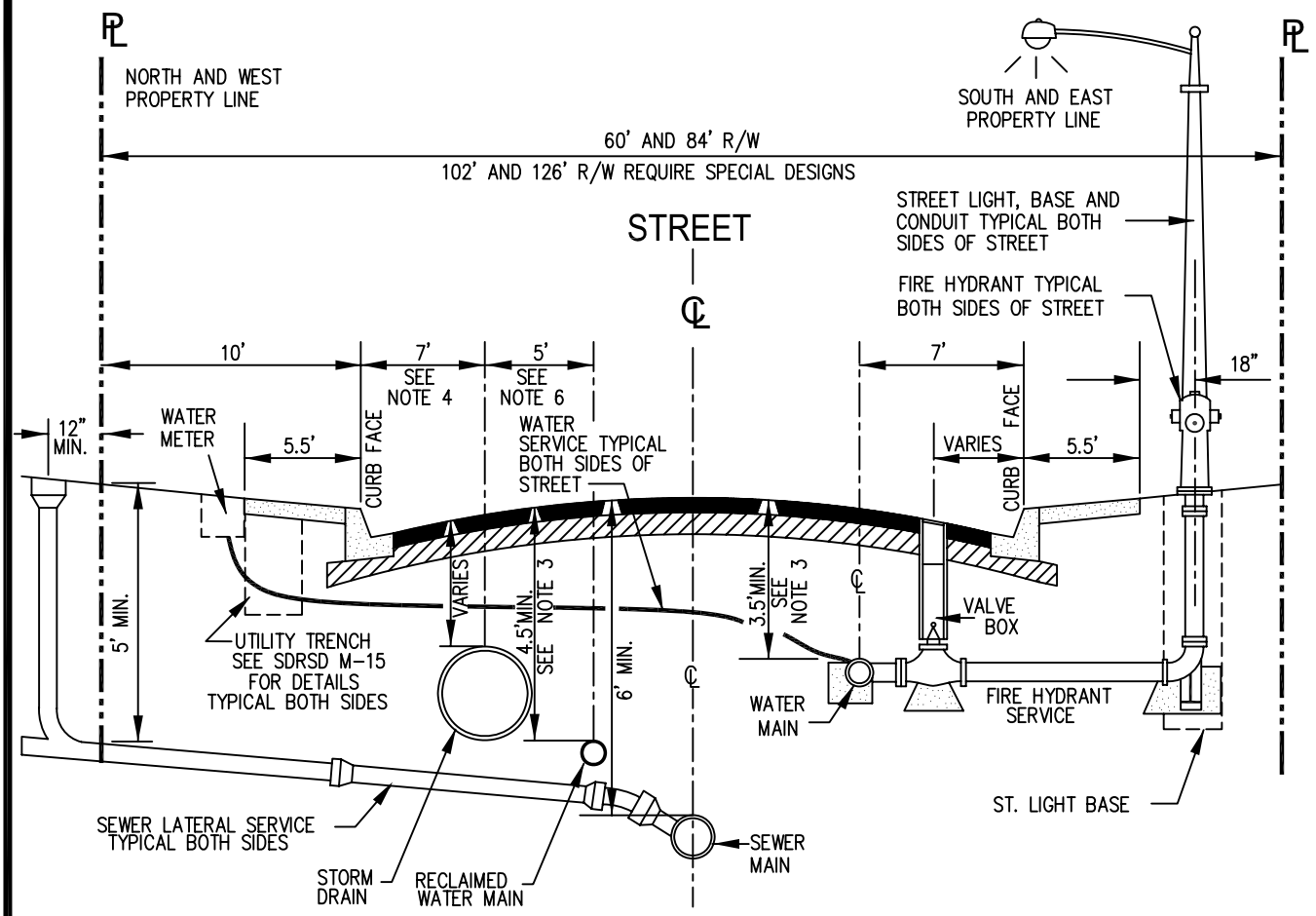

TYPICAL SECTION
(CONTIGUOUS SIDEWALK)

NOTES

1). LOCATION OF WATER MAIN WILL GOVERN LOCATION OF UTILITIES. NORMALLY THE WATER MAIN WILL BE LOCATED ON SOUTH AND EAST SIDE OF STREET EXCEPT ON SINGLE LOADED STREETS WHERE IT MAY BE PLACED ON THE LOADED SIDE OF THE STREET.

2). STREET LIGHTS AND FIRE HYDRANTS WILL BE LOCATED 18" OFF FACE OF CURB WHEN CONTIGUOUS SIDEWALK EXCEEDS 5 FEET IN WIDTH.

3). WATERLINE DEPTH TO BE 3.5' MIN. WITHIN ALL LOCAL AND COLLECTOR STREET CLASSIFICATIONS AND 4.5' MIN. ON ALL ARTERIAL STREETS. RECLAIMED WATERLINE DEPTH TO BE 4.5' MIN. WITHIN ALL LOCAL AND COLLECTOR STREET CLASSIFICATIONS AND 5.5' MIN. ON ALL ARTERIAL STREETS.

4). REDUCE TO 5' FOR 36' WIDE CURB TO CURB STREETS.

5). WHEN SIDEWALK MEANDERS, WATER METER SHALL BE INSTALLED AT BACK OF CURB.

6). INCREASE TO 10' FOR 84' RIGHT-OF-WAY.

7). HORIZONTAL ALIGNMENT OF UTILITIES SHALL FOLLOW THE STREET CURVATURE UNLESS SPECIFICALLY WAIVED BY THE CITY ENGINEER.

REV.	APPROVED	DATE	CITY OF CARLSBAD		
			LOCATIONS OF UNDERGROUND UTILITIES	Glen R. Van Patti CITY ENGINEER	12/11 DATE
				SUPPLEMENTAL STANDARD NO.	GS-6

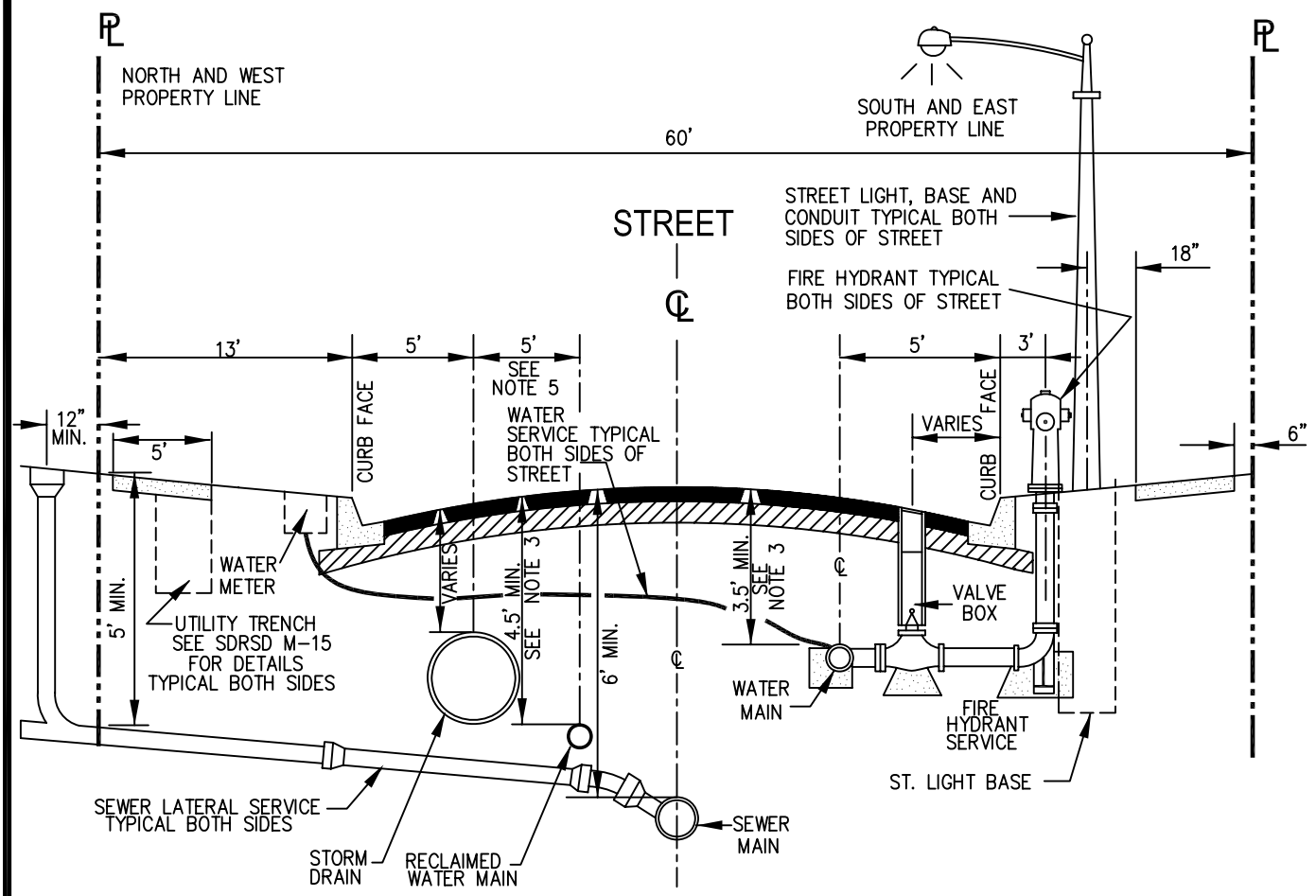

TYPICAL SECTION
LOCAL STREET

NOTES

1). LOCATION OF WATER MAIN WILL GOVERN LOCATION OF UTILITIES. NORMALLY THE WATER MAIN WILL BE LOCATED ON SOUTH AND EAST SIDE OF STREET EXCEPT ON SINGLE LOADED STREETS WHERE IT MAY BE PLACED ON THE LOADED SIDE OF THE STREET.

2). STREET LIGHTS AND FIRE HYDRANTS WILL BE LOCATED 18" OFF OF SIDEWALK.

3). WATERLINE DEPTH TO BE 3.5' MIN. WITHIN ALL LOCAL AND COLLECTOR STREET CLASSIFICATIONS AND 4.5' MIN. ON ALL ARTERIAL STREETS. RECLAIMED WATERLINE DEPTH TO BE 4.5' MIN. WITHIN ALL LOCAL AND COLLECTOR STREET CLASSIFICATIONS AND 5.5' MIN. ON ALL ARTERIAL STREETS.

4). WHEN SIDEWALK MEANDERS, WATER METER SHALL BE INSTALLED AT BACK OF CURB.

5). HORIZONTAL ALIGNMENT OF UTILITIES SHALL FOLLOW THE STREET CURVATURE UNLESS SPECIFICALLY WAIVED BY THE CITY ENGINEER.

REV.	APPROVED	DATE	CITY OF CARLSBAD		
			LOCATIONS OF UNDERGROUND UTILITIES	Glen R. Van Dyke CITY ENGINEER	12/11 DATE
				SUPPLEMENTAL STANDARD NO.	GS-6A

NOTES:

1. A MINIMUM 15 GALLON CONTAINER IS REQUIRED.
2. TYPE OF TREE TO BE PLANTED WILL BE IN ACCORDANCE WITH THE CITY OF CARLSBAD LIST OF APPROVED STREET TREES.

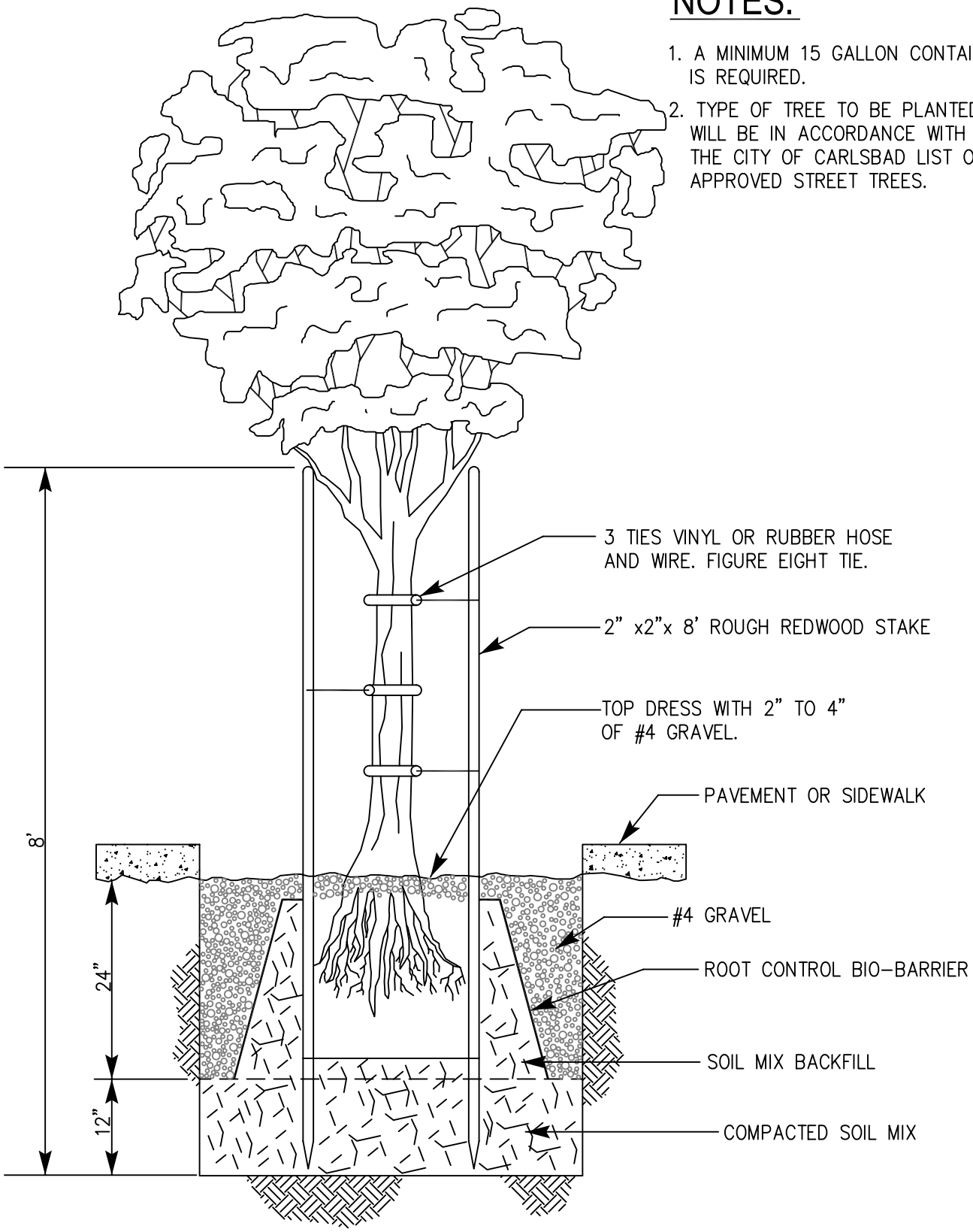

REV.	APPROVED	DATE	CITY OF CARLSBAD		
			PARKWAY TREE PLANTING	CITY ENGINEER	6-04 DATE
				SUPPLEMENTAL STANDARD NO.	GS-8

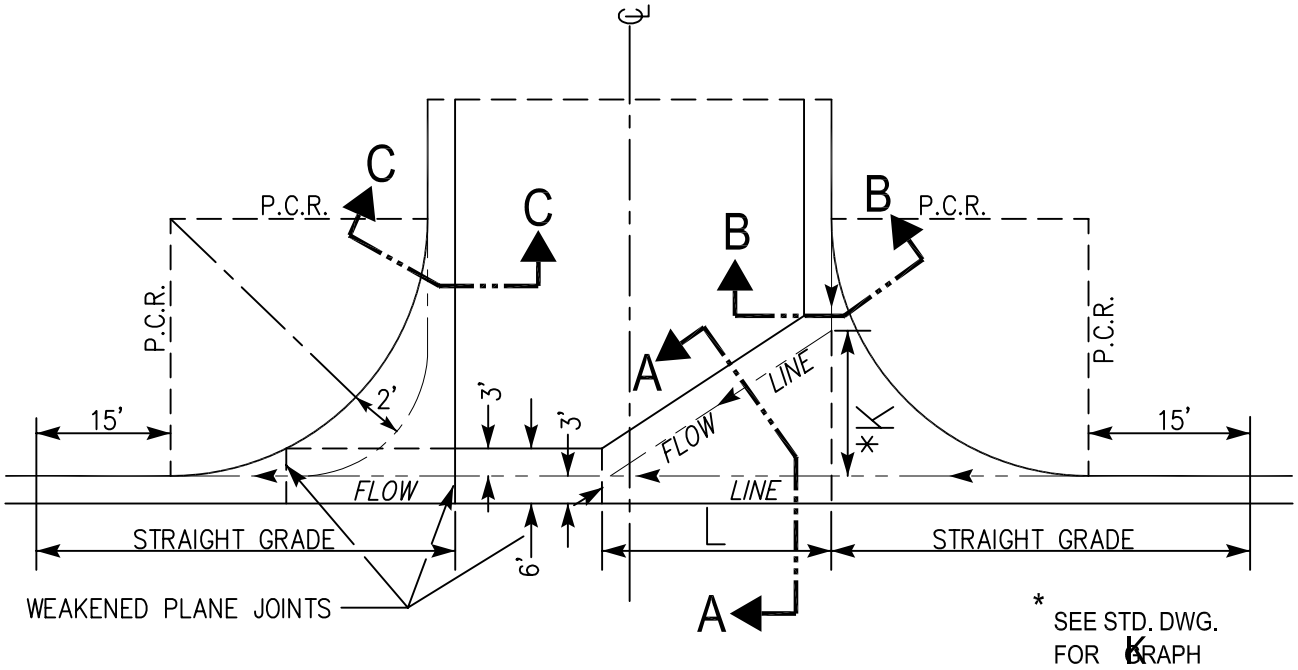

DETAIL PLAN OF CROSS GUTTER

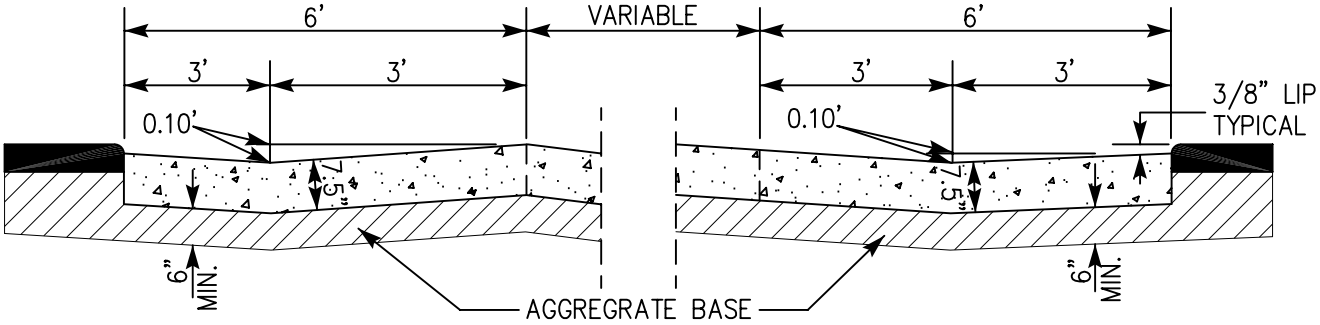

SECTION A-A

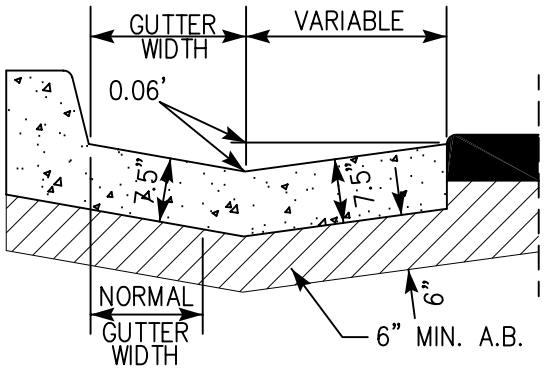

SECTION C-C

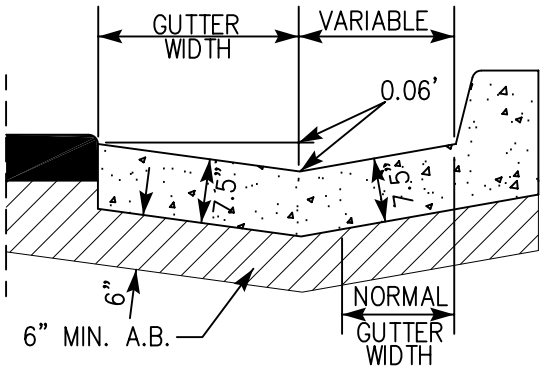

SECTION B-B

REV.	APPROVED	DATE	CITY OF CARLSBAD	
			SPECIAL CROSS GUTTER (STEEP GRADES)	CITY ENGINEER 6-04 DATE
				SUPPLEMENTAL STANDARD NO. GS-9

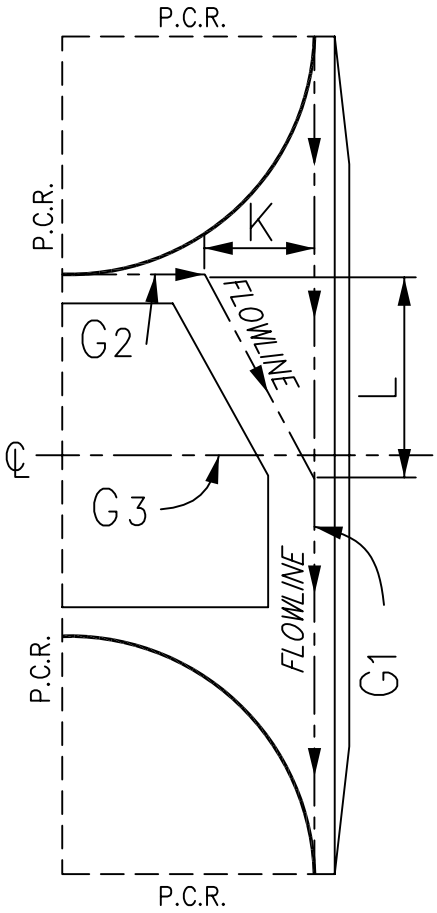

$$L = \frac{KG_1}{G_3}$$

PLAN

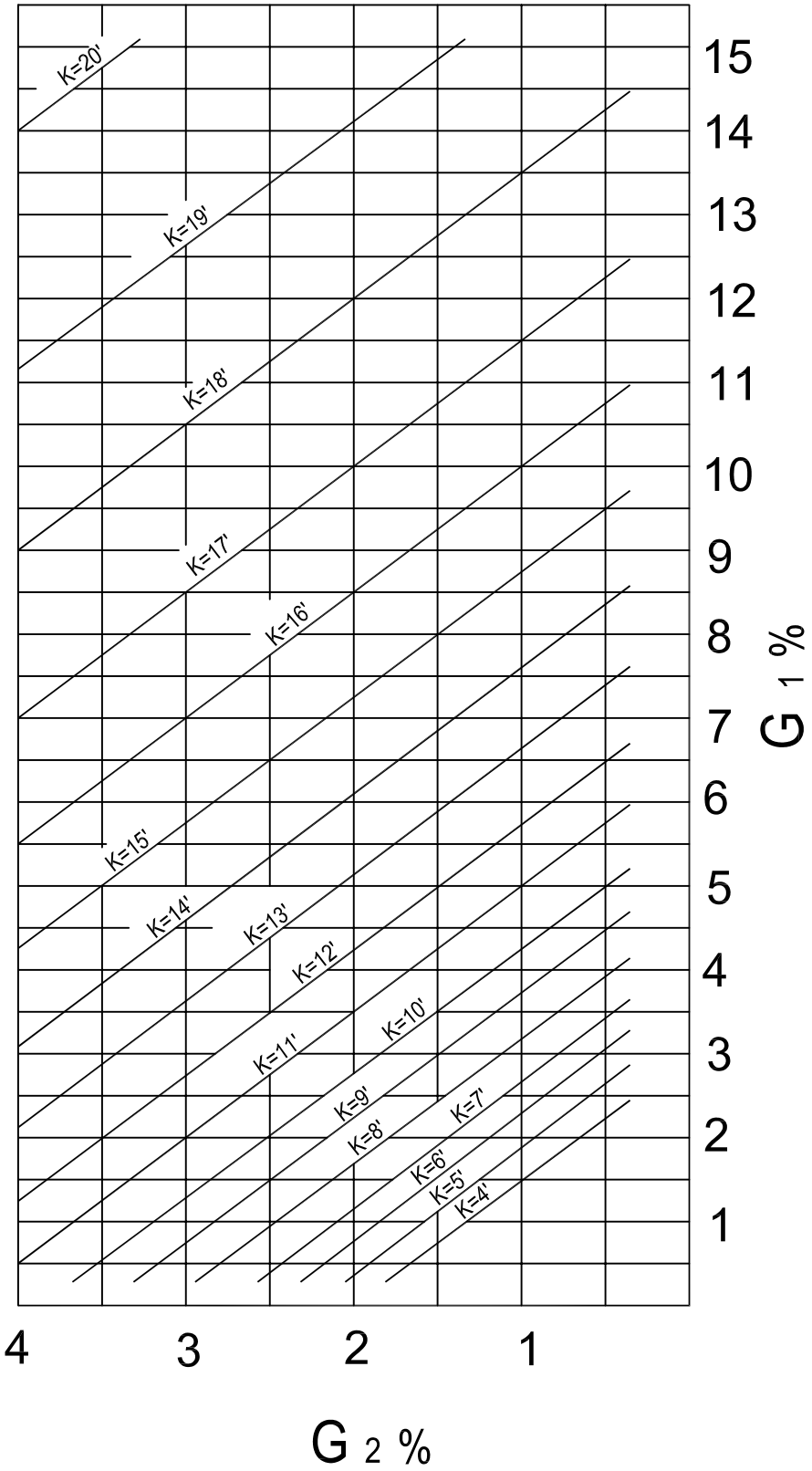

REV.	APPROVED	DATE	CITY OF CARLSBAD	
			GRAPH FOR SPECIAL CROSS GUTTER	6-04 CITY ENGINEER DATE
				SUPPLEMENTAL STANDARD NO. GS-10

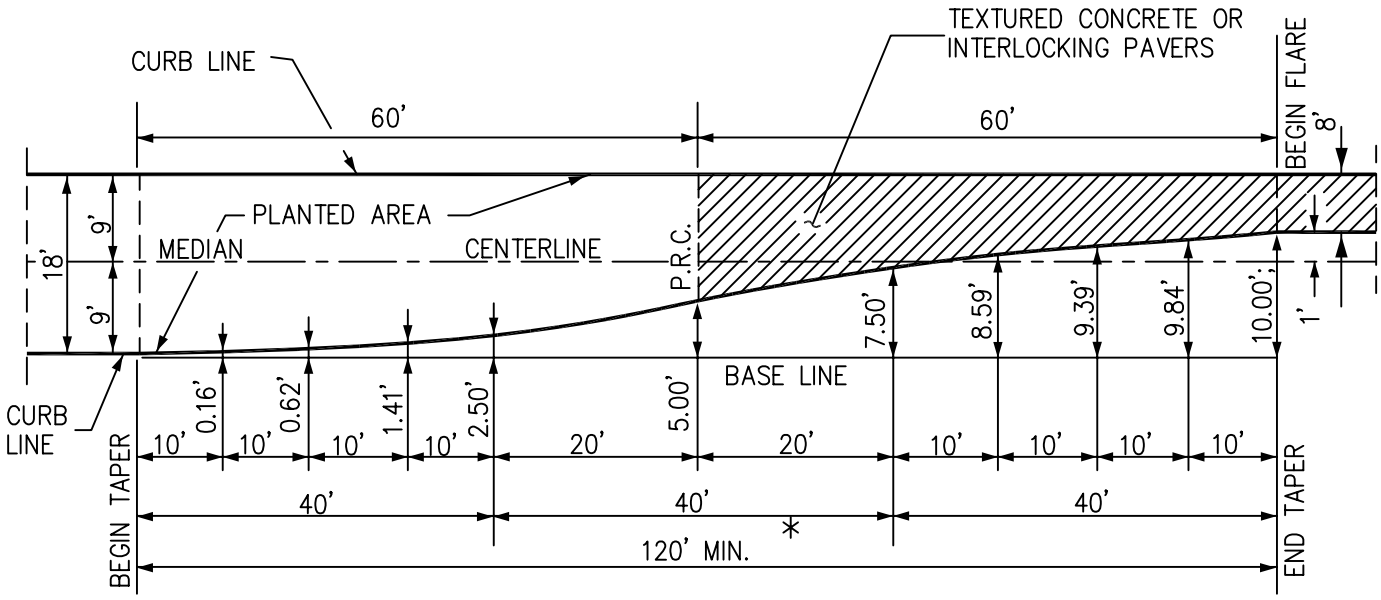

* NOTE:
FOR STREETS REQUIRING LONGER TAPERS THE DIMENSIONS MAY BE EXTENDED IN A PROPORTIONATE MANNER.

DETAIL 120' TAPER

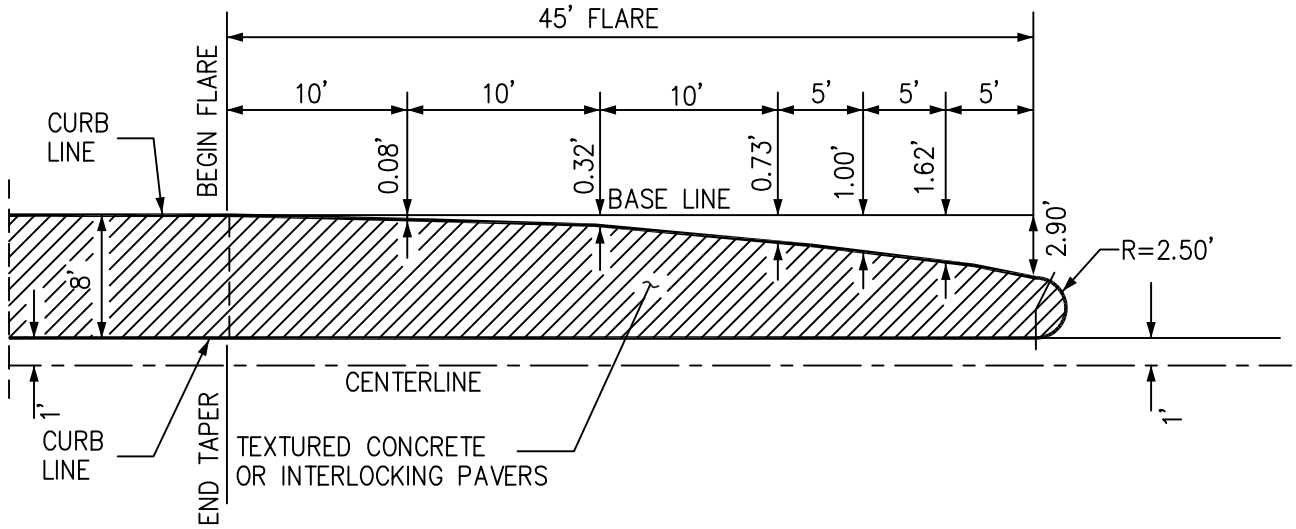

DETAIL NOSE FLARE

REV.	APPROVED	DATE	CITY OF CARLSBAD	
			MEDIAN TAPER AND NOSE FLARE	CITY ENGINEER 6-04 DATE
				SUPPLEMENTAL STANDARD NO. GS-11

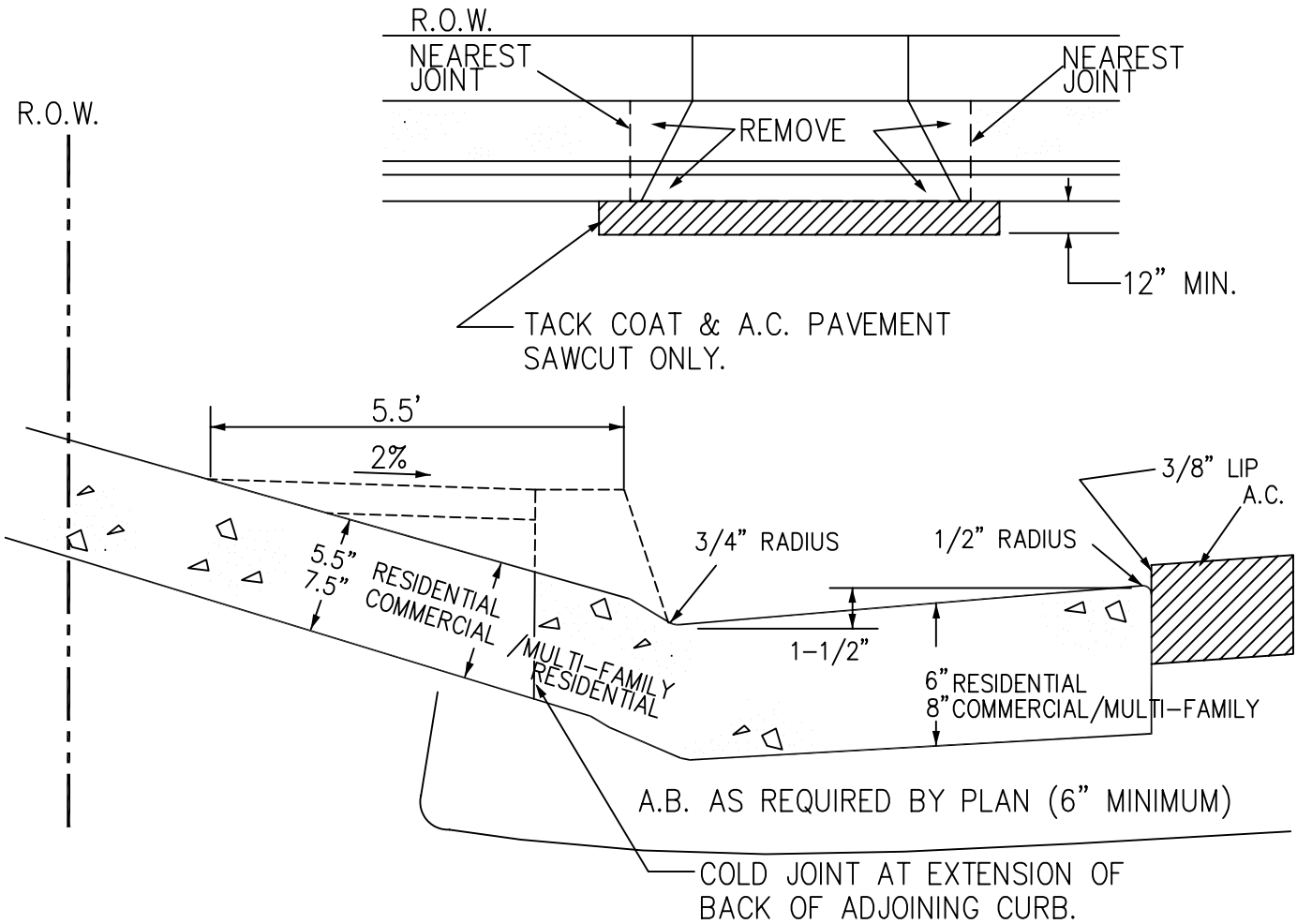

NOTES:

1. PROVIDE WEAKENED PLANE AT 15' MAXIMUM, OR AT TOP OF TRANSITION.
2. REMOVE CURB, GUTTER & SIDEWALK AS SHOWN ABOVE TO NEAREST EXISTING JOINTS. FORM ON A.C. SIDE AND SLOT PAVE WITH D-AR4000 A.C.

REV.	APPROVED	DATE	CITY OF CARLSBAD	
			TYPICAL DRIVEWAY ADDITIONS	CITY ENGINEER 6-04 DATE
				SUPPLEMENTAL STANDARD NO. GS-12

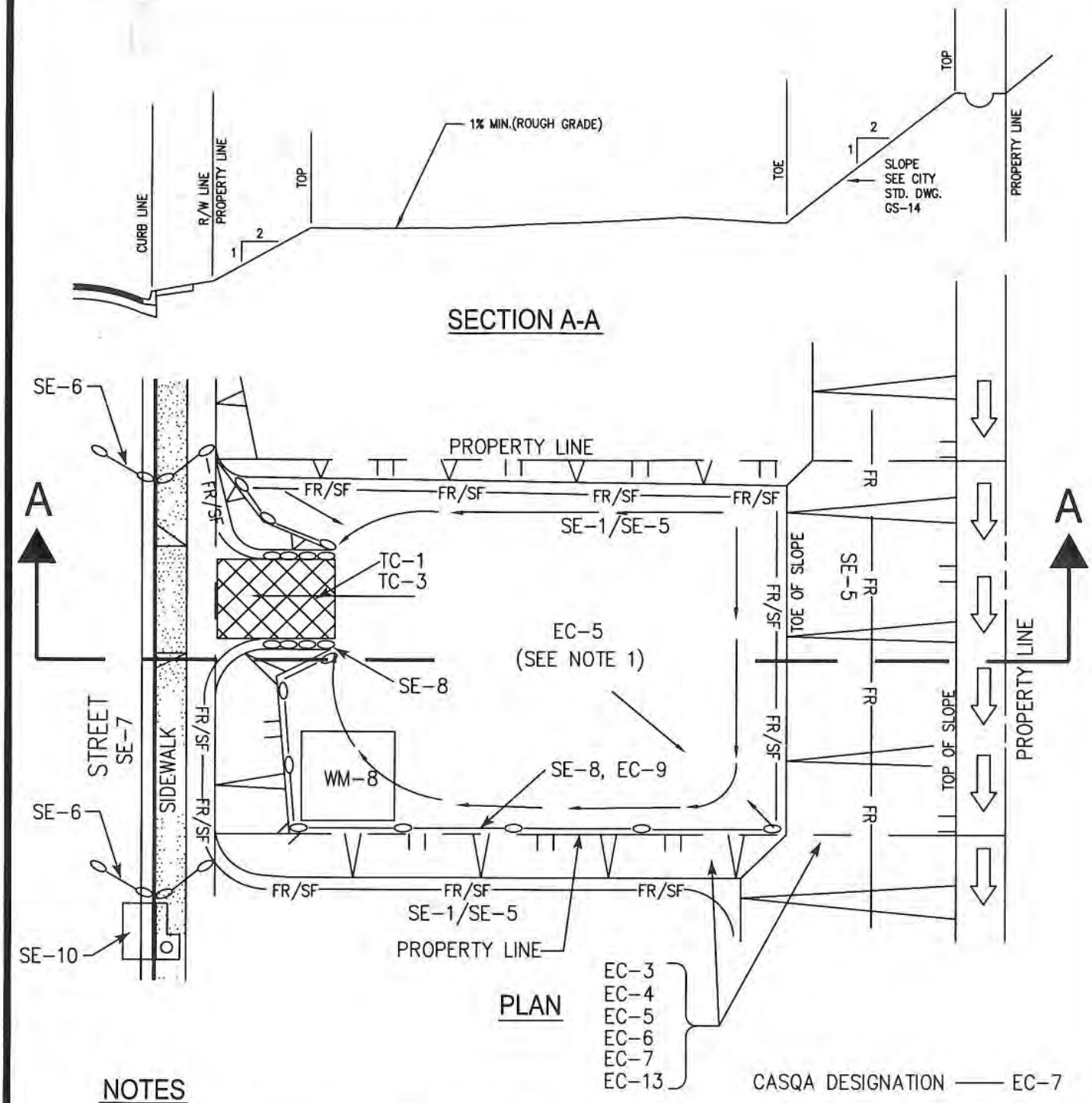

NOTES

1). USE EC-3, EC-4, EC-6, EC-7 OR EC-13 AS APPLICABLE AND APPROVED BY INSPECTOR.

2). BEST MANAGEMENT PRACTICE (BMP) FACT SHEETS AS REFERENCED CAN BE DOWNLOADED FROM THE CALIFORNIA STORMWATER QUALITY ASSOCIATION (CASQA) WEBSITE AT WWW.CABMPHANDBOOKS.COM/CONSTRUCTION.ASP

3). DEPENDING ON SITE CONDITIONS, ADDITIONAL BMP'S MAY BE REQUIRED BY THE INSPECTOR.

REV.	APPROVED	DATE	CITY OF CARLSBAD	Robert T. Johnson Jr. 2/23/07 CITY ENGINEER DATE
			TYPICAL BUILDING PAD CONSTRUCTION BMP REQUIREMENTS	SUPPLEMENTAL STANDARD NO. GS-13

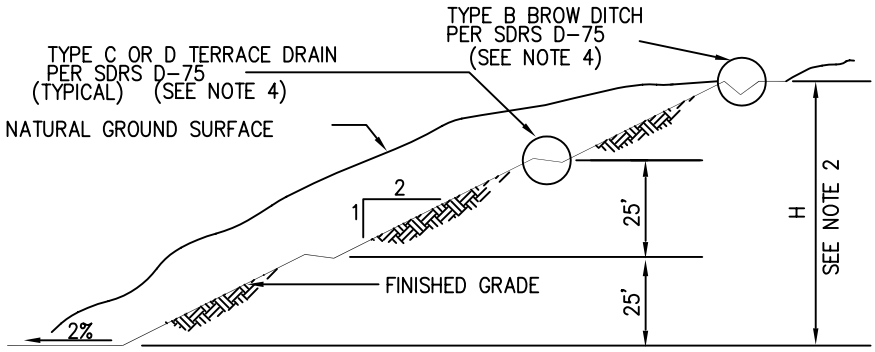

TYPICAL CUT SLOPE

SEE TABLE BELOW FOR L VALUES

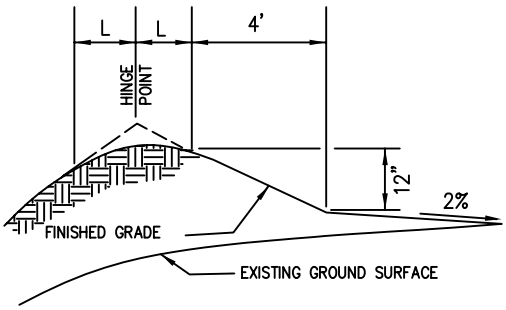

H IN FEET	L IN FEET
0'-5'	—
5'-20'	2.5'
20'-40'	5'
OVER 40'	10'

SLOPE ROUNDING DETAIL
(DOES NOT APPLY TO SIDE SLOPES BETWEEN RESIDENTIAL UNITS)

DETAIL A

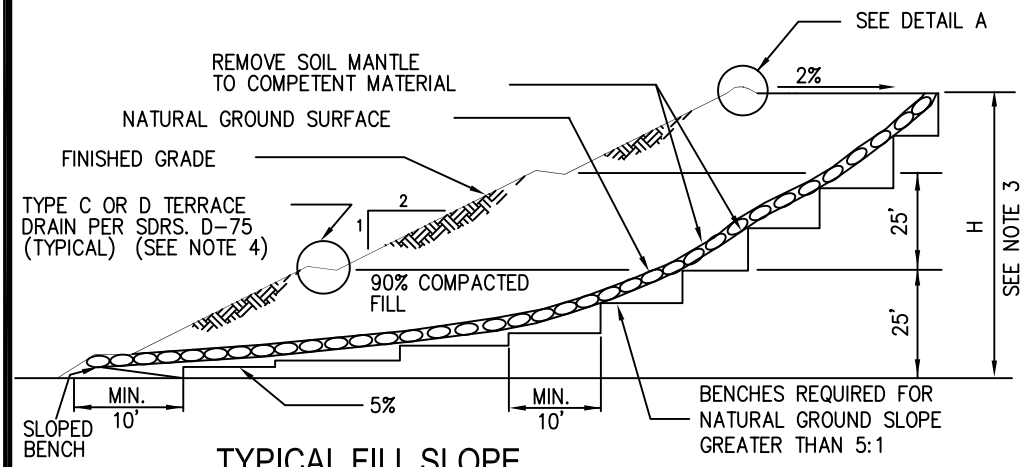

TYPICAL FILL SLOPE

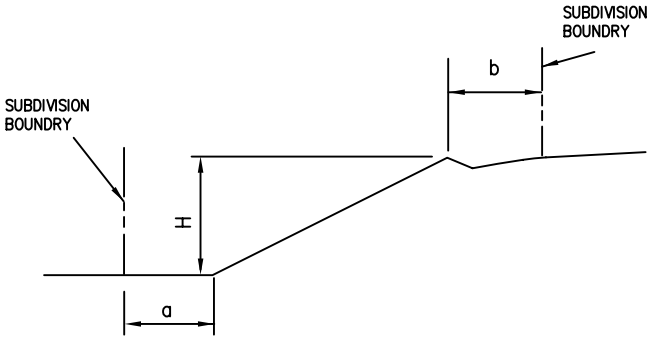

H in feet	a	b
less than 10'	2'	3.5'
10' - 20'	(H/5)'	4'
over 20'	4+H/10' (10' MAX)	H/5'(10'max.)

SETBACKS

NOTES

1). ALL FILL MUST BE COMPACTED TO A MINIMUM OF 90% OF THE MAXIMUM DENSITY WITH THE EXCEPTION OF THE OUTER 8" OF THE SLOPE SURFACE WHICH MAY BE GRID ROLLED TO 85% DENSITY.

2). CUT SLOPES TO 40' REQUIRE NO BENCH. CUT SLOPES OVER 100' REQUIRE ONE MIN. 20' BENCH MIDWAY ON SLOPE.

3). FILL SLOPES TO 30' REQUIRE NO BENCH. FILL SLOPES OVER 100' REQUIRE ONE MIN. 20' BENCH MIDWAY ON SLOPE.

4). AS MODIFIED BY CITY OF CARLSBAD ENGINEERING STANDARDS.

REV.	APPROVED	DATE

CITY OF CARLSBAD

GRADING OF SLOPES AND REQUIRED SETBACKS

CITY ENGINEER — DATE 6-04

SUPPLEMENTAL STANDARD NO. GS-14

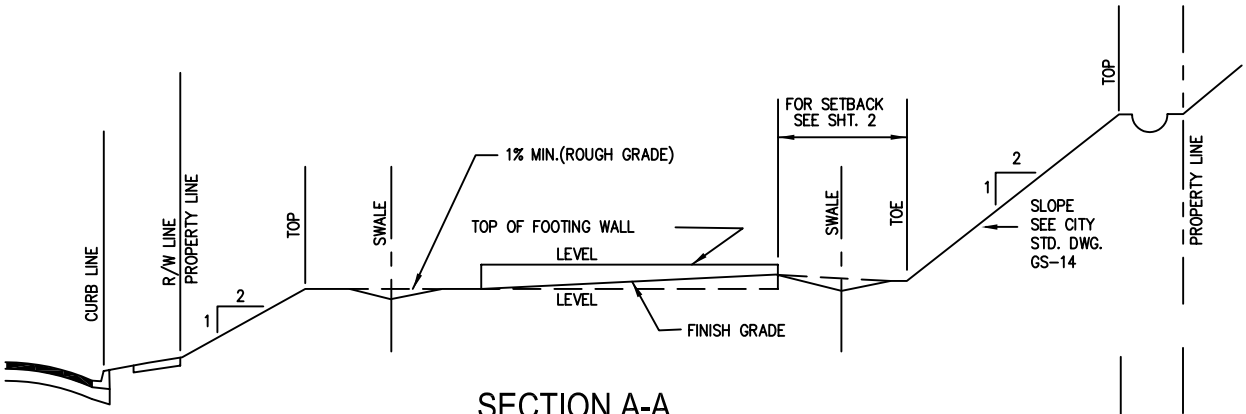

SECTION A-A

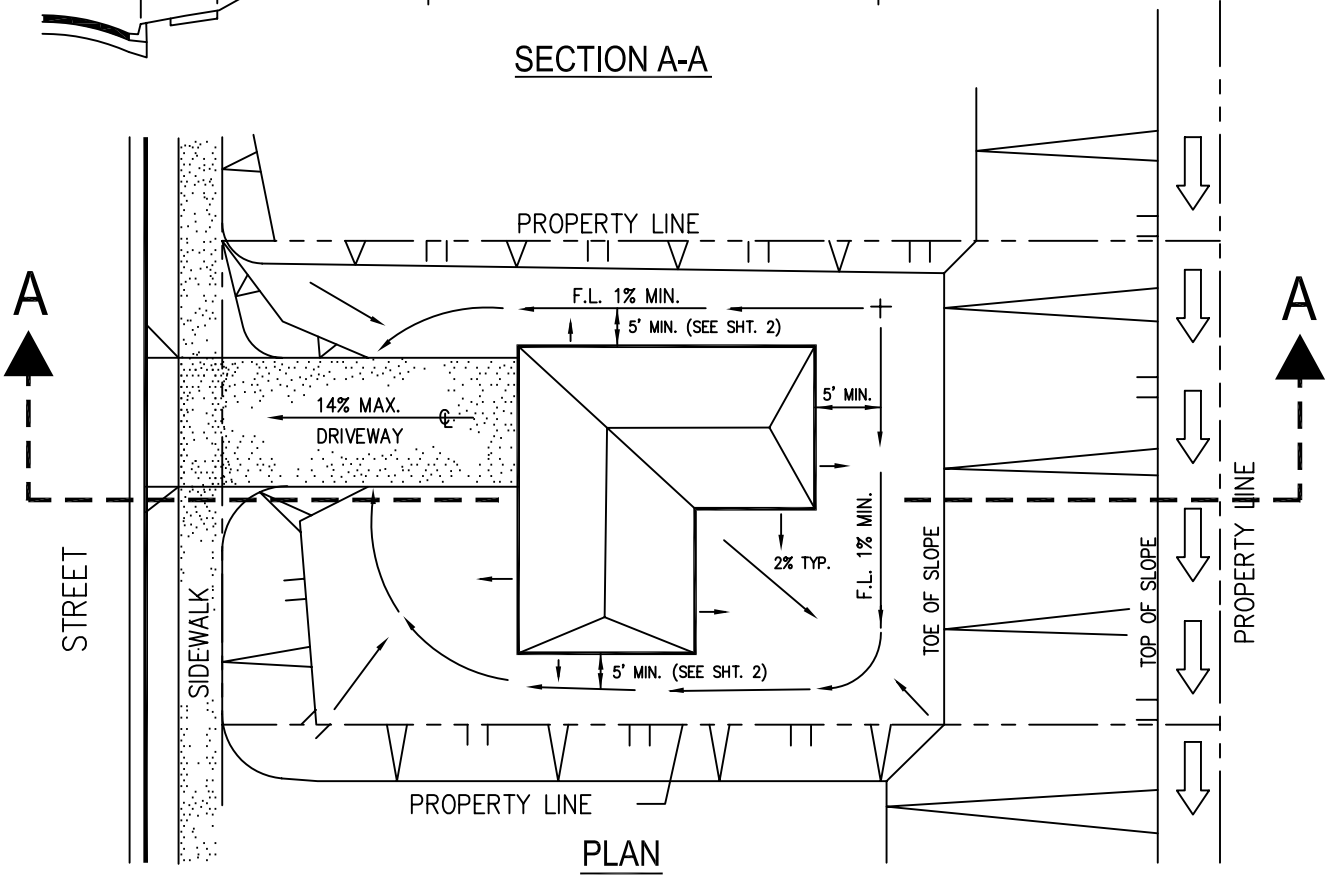

PLAN

NOTES

1). DRAINAGE SHALL BE CONDUCTED TO STREET AS SURFACE FLOW WHENEVER POSSIBLE.

2). NON-EROSIVE DRAINAGE SURFACE REQUIRED WHERE FLOW IS COLLECTED.

3). FINISH GRADING SHALL PROVIDE A MINIMUM POSITIVE DRAINAGE OF 2% TO SWALE 5' AWAY FROM THE BUILDING UNLESS SPECIFICALLY APPROVED OTHERWISE BY THE CITY ENGINEER.(SEE SHEET 2)

4). DRIVEWAYS BETWEEN 14% AND 20% MUST RECEIVE SPECIAL APPROVAL OF THE CITY ENGINEER. SUBMIT ENGINEERED PROFILE AND LETTER OF REQUEST TO THE ENGINEERING DEPARTMENT.

REV.	APPROVED	DATE	CITY OF CARLSBAD	
			TYPICAL FINISHED LOT GRADING	6-04 CITY ENGINEER DATE
				SUPPLEMENTAL STANDARD NO. GS-15

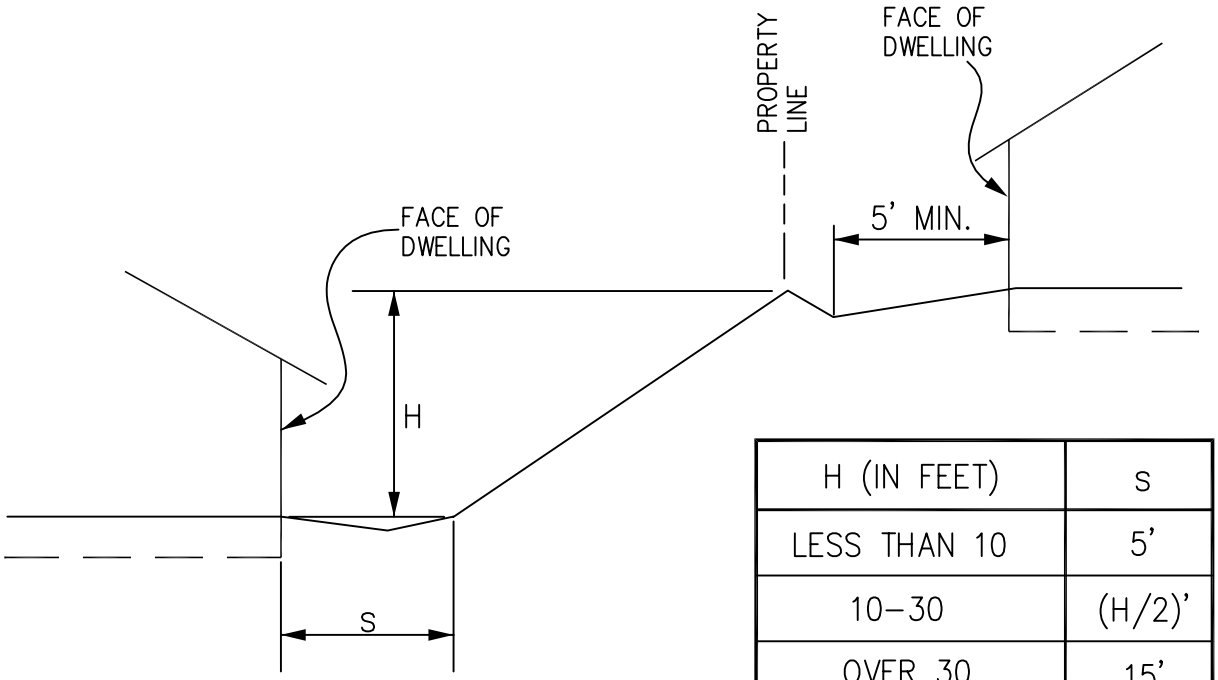

H (IN FEET)	S
LESS THAN 10	5'
10–30	(H/2)'
OVER 30	15'

DWELLING SETBACK FROM SLOPE

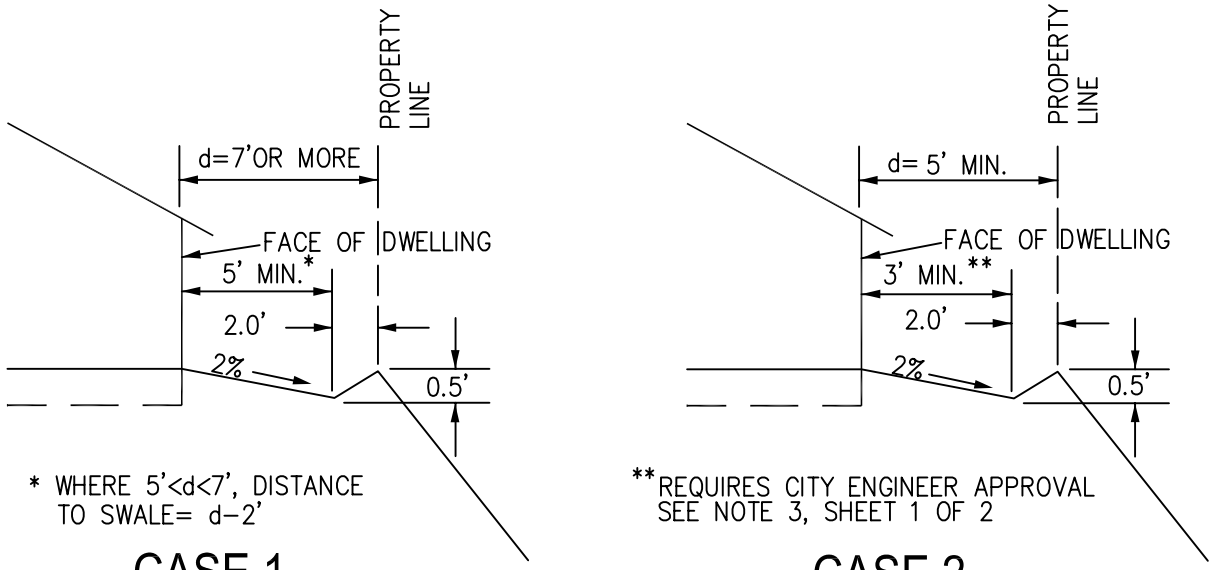

* WHERE 5'<d<7', DISTANCE TO SWALE= d–2'

CASE 1

**REQUIRES CITY ENGINEER APPROVAL SEE NOTE 3, SHEET 1 OF 2

CASE 2

DRAINAGE SWALE DETAIL

SHEET 2 OF 2

REV.	APPROVED	DATE	CITY OF CARLSBAD	6–04
			TYPICAL FINISHED LOT GRADING	CITY ENGINEER / DATE
				SUPPLEMENTAL STANDARD NO. GS-15

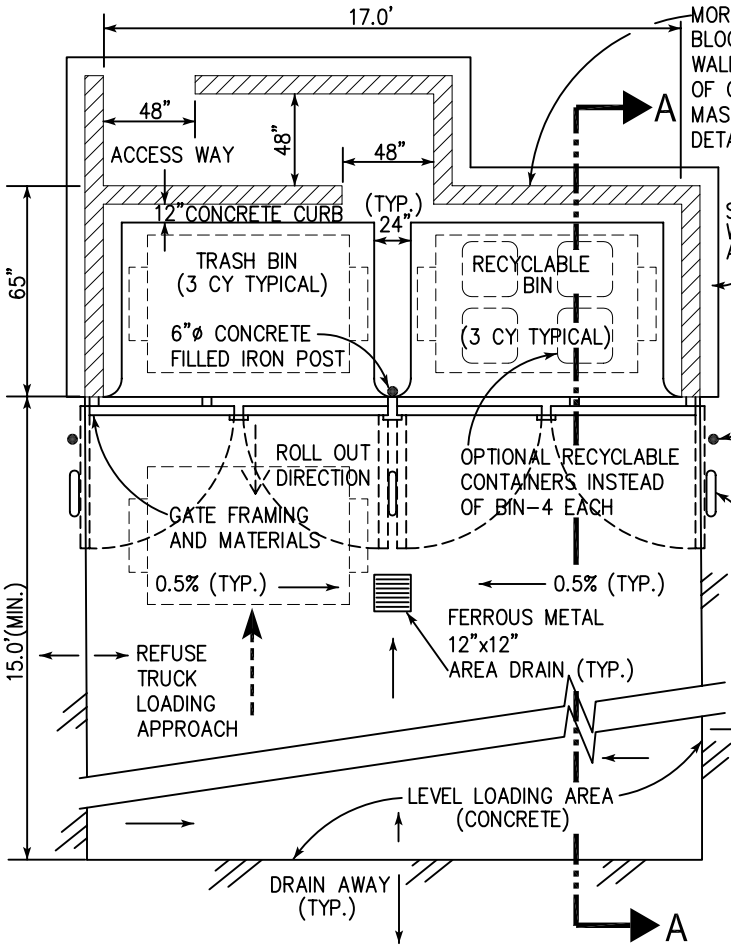

TYPE A - DRIVE AND LOAD FRONT APPROACH

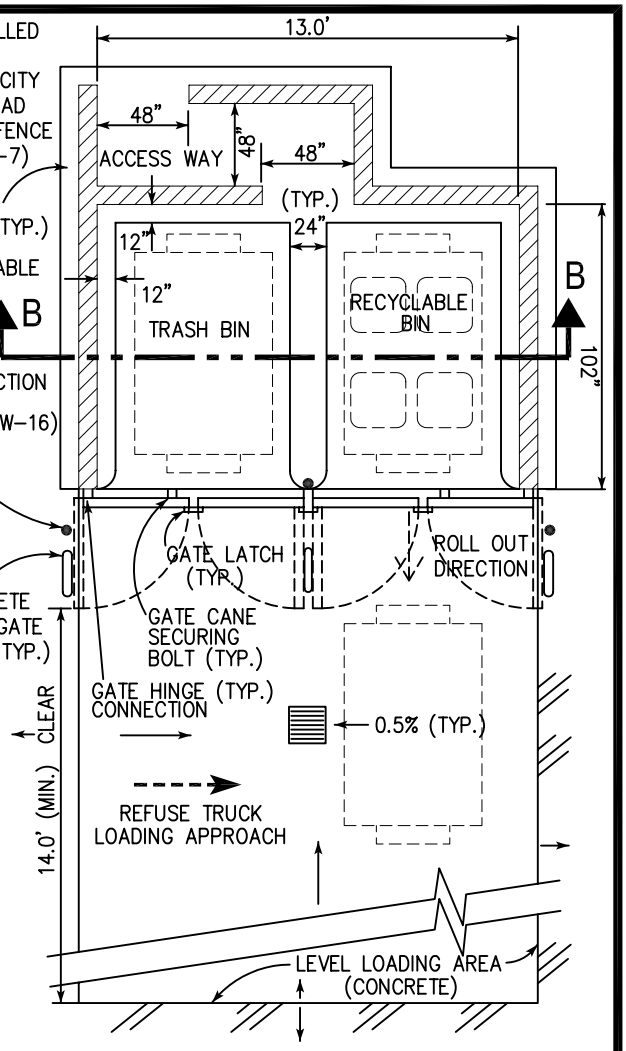

TYPE B - DRIVE AND LOAD SIDE APPROACH

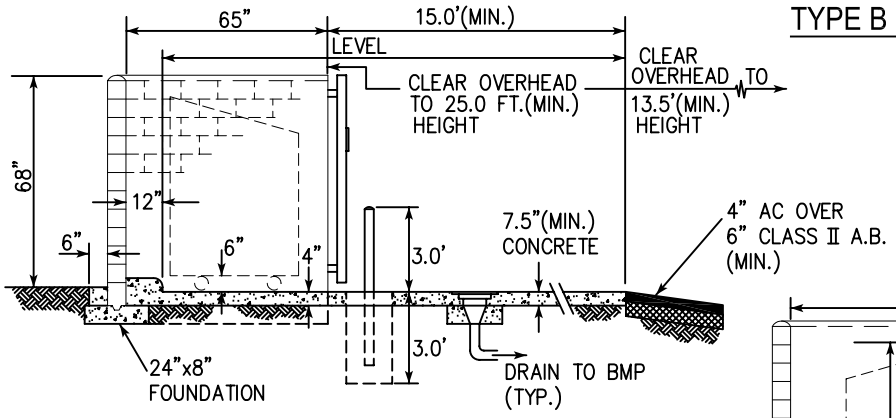

SECTION A-A

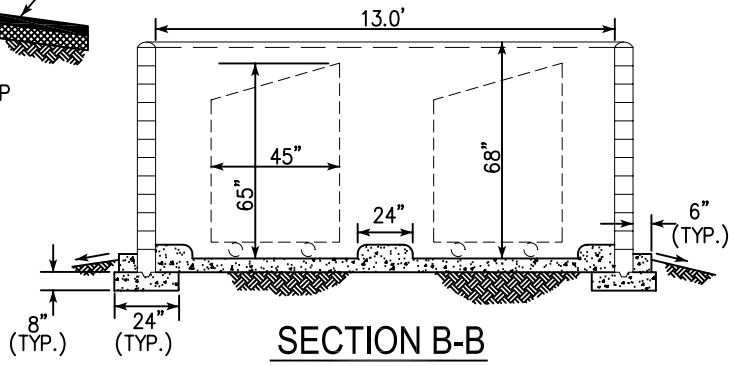

SECTION B-B

SHEET 1 OF 2

REV.	APPROVED	DATE	CITY OF CARLSBAD	
			REFUSE BIN ENCLOSURE FOR 3 CUBIC YARDS BINS	6-04 CITY ENGINEER DATE
				SUPPLEMENTAL STANDARD NO. GS-16

NOTES:

1. LOCATION OF REFUSE BIN ENCLOSURES SHALL BE APPROVED BY THE PLANNING DIRECTOR AND THE CITY ENGINEER. ENCLOSURE SHALL BE OF SIMILAR COLORS AND/OR MATERIALS AS THE PROJECT TO THE SATISFACTION OF THE PLANNING DIRECTOR.
2. THE ENCLOSURE SLAB AND LOADING AREA SHALL BE LEVEL IN ORDER TO FACILITATE THE ROLLING OF BINS FOR LOADING POSITIONING.
3. GATES SHALL BE MOUNTED SO THAT THEY SWING FULLY OPEN WITH NO PROTRUSION INTO THE PATH OF THE BIN. THE GATES SHALL HAVE CHAINS, HOOKS OR PIN STOPS AT THEIR FULL OPEN POSITION TO HOLD THEM OPEN.
4. ALL GATE CONNECTION LATCHES, SECURING BOLTS, FRAMING, AND HINGES SHALL BE HEAVY DUTY TYPE AND PAINTED OR TREATED AGAINST CORROSION.
5. GATE MATERIALS TO BE APPROVED BY PLANNING DIRECTOR.
6. POSITIVE DRAINAGE AWAY FROM THE ENCLOSURE AND LOADING AREAS SHALL BE PROVIDED AND MAINTAINED.
7. ALTERNATIVE CONFIGURATION AND LOCATION OF THE ACCESS WAY MAY BE ACCEPTABLE ON A CASE BY CASE BASIS PROVIDED NO PORTION OF THE TRASH BINS ARE DIRECTLY VISIBLE TO THE PUBLIC.
8. LOADING AND ENCLOSURE AREA DRAINAGE SHALL BE INDEPENDENT AND DRAINED TOWARDS AN APPROVED SITE BMP.
9. DEVELOPMENT PROJECTS SHALL INCORPORATE THE REQUIREMENTS OF THE "MODEL ORDINANCE OF THE CALIFORNIA INTEGRATED WASTE MANAGEMENT BOARD RELATING TO AREAS FOR COLLECTING AND LOADING RECYCLABLE MATERIALS".
10. AREAS FOR RECYCLING SHALL BE ADEQUATE IN CAPACITY, NUMBER AND DISTRIBUTION TO SERVE THE DEVELOPMENT WHERE THE PROJECT OCCURS.
11. RECYCLING AREAS SHALL BE SECURED TO PREVENT THE THEFT OF RECYCLABLE MATERIALS BY UNAUTHORIZED PERSONS WHILE ALLOWING AUTHORIZED PERSONS ACCESS FOR DISPOSAL OF MATERIALS.
12. RECYCLING AREAS OR THE BINS AND CONTAINERS PLACED THEREIN MUST PROVIDE PROTECTION AGAINST SEVERE ENVIRONMENTAL CONDITIONS WHICH MIGHT RENDER THE COLLECTED MATERIALS UNMARKETABLE.
13. A SIGN CLEARLY IDENTIFYING ALL RECYCLING AND SOLID WASTE COLLECTION AND LOADING AREAS AND THE MATERIALS ACCEPTED THEREIN SHALL BE POSTED ADJACENT TO ALL POINTS OF ACCESS TO THE RECYCLING AREAS.
14. EACH RECYCLING AREA WITHIN A MULTI-FAMILY RESIDENTIAL DEVELOPMENT SHALL BE NO GREATER THAN 250 FEET FROM EACH LIVING UNIT.

REV.	APPROVED	DATE	CITY OF CARLSBAD	
			REFUSE BIN ENCLOSURE FOR 3 CUBIC YARDS BINS	6-04 CITY ENGINEER DATE
				SUPPLEMENTAL STANDARD NO. GS-16

MINIMUM STRUCTURAL SECTION IN INCHES TI= 1.35 (EWL)

T.I.	4.5		5.0		6.0		7.0		8.0		8.5		9.0	
TYPE SUBGRADE	CUL-DE-SAC		LOCAL STREET		COLLECTOR		LIGHT INDUSTRIAL		SECONDARY ARTERIAL		MAJOR ARTERIAL		PRIME ARTERIAL	
R-VALUE	AC	AB	AC	AB	AC	AB	AC	AB	AC	AB	AC	AB	AC	AB
8			4	7	4	13	4	15						
10	4	5							4	18	5	18	6	18
12			4	6	4	12	4	14						
14									4	17	5	17	6	17
16	4	4			4	11	4	13			5	16	6	16
18			4	5					4	16				
20					4	10	4	12	4	15	5	15	6	15
22													6	14
24			4	4	4	9	4	11	4	14	5	14		
26											5	13	6	13
28					4	8	4	10	4	13				
30											5	12	6	12
32					4	7	4	9	4	12			6	11
34									4	11	5	11		
36					4	6	4	8					6	10
38									4	10	5	10	6	9
40							4	7			5	9		
42									4	9			6	8
44							4	6			5	8		
46									4	8			6	7
48											5	7	6	6
50									4	7	5	6		
52														
54									4	6				

1. SOILS HAVING AN R VALUE LESS THAN 12 REQUIRE SPECIAL CONSIDERATION. AN ALTERNATIVE TO INCREASING THE STRUCTURAL SECTION IS TO TEST FOR LIME STABILIZATION. THE CORRESPONDING STRUCTURAL SECTION DETERMINED AND % LIME ESTABLISHED.
2. A.B. = ALL AGGREGRATE BASE MATERIALS SHALL BE CLASS II PER CALTRANS SECTION 26-1.02A OR CMB PER SECTION 200-2.4 SSPWC.
3. THE BOTTOM FIGURES LISTED ARE THE MINIMUM PERMITTED.
4. TOP 12" OF SUB-GRADE TO BE 95% COMPACTION.
5. PAVING SHALL BE DONE IN A MINIMUM OF TWO LIFTS WITH THE SURFACE COURSE DONE JUST PRIOR OCCUPANCY. THE BASE COURSE SHALL BE 2.5" MIN.
6. POTABLE, RECLAIMED WATER AND GAS, VALVE BOXES SHALL BE RAISED TO GRADE OR MADE ACCESSIBLE AT EACH PAVING LIFT AS APPROVED BY THE CITY ENGINEER. IF THE SEWER MAIN IS IN SERVICE, THE ACCESSHOLE SHALL BE RAISED TO AT EACH PAVING LIFT. RAISING APPURTENANCES TO FS BEFORE AC CAP WILL NOT BE ALLOWED. RAISING VALVE BOXES, CLEANOUTS OR ACCESSORIES TO FINISH GRADE BEFORE FINISH AC CAP IS PLACED WILL NOT BE ALLOWED.

REV.	APPROVED	DATE	CITY OF CARLSBAD		
			STRUCTURAL SECTION OF STREETS AND ALLEYS	CITY ENGINEER	6-04 DATE
				SUPPLEMENTAL STANDARD NO.	GS-17

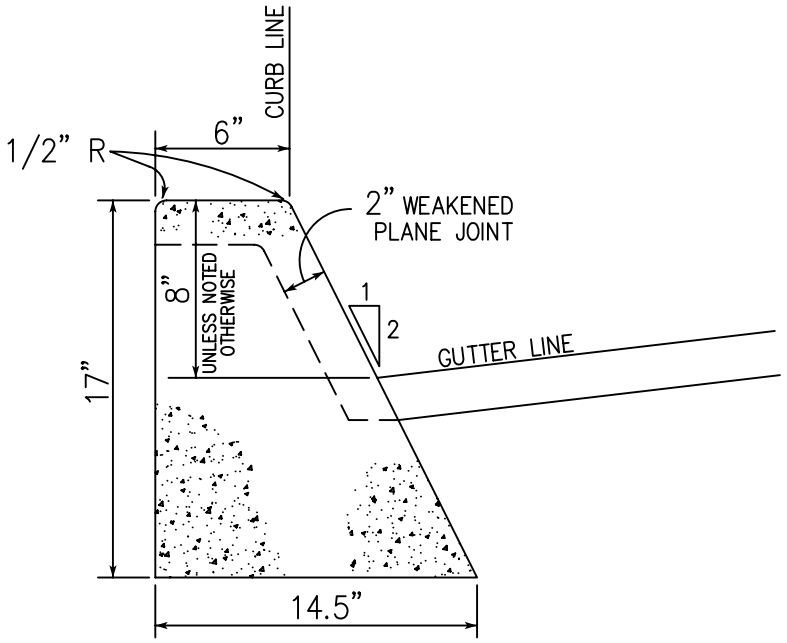

8" CURB
AREA = 1.21 SQ. FT.

LEGEND ON PLANS

8" CURB

REV.	APPROVED	DATE

CITY OF CARLSBAD

MEDIAN CURB

Glen R. Van Peski 12/11
CITY ENGINEER DATE

SUPPLEMENTAL STANDARD NO. GS-18

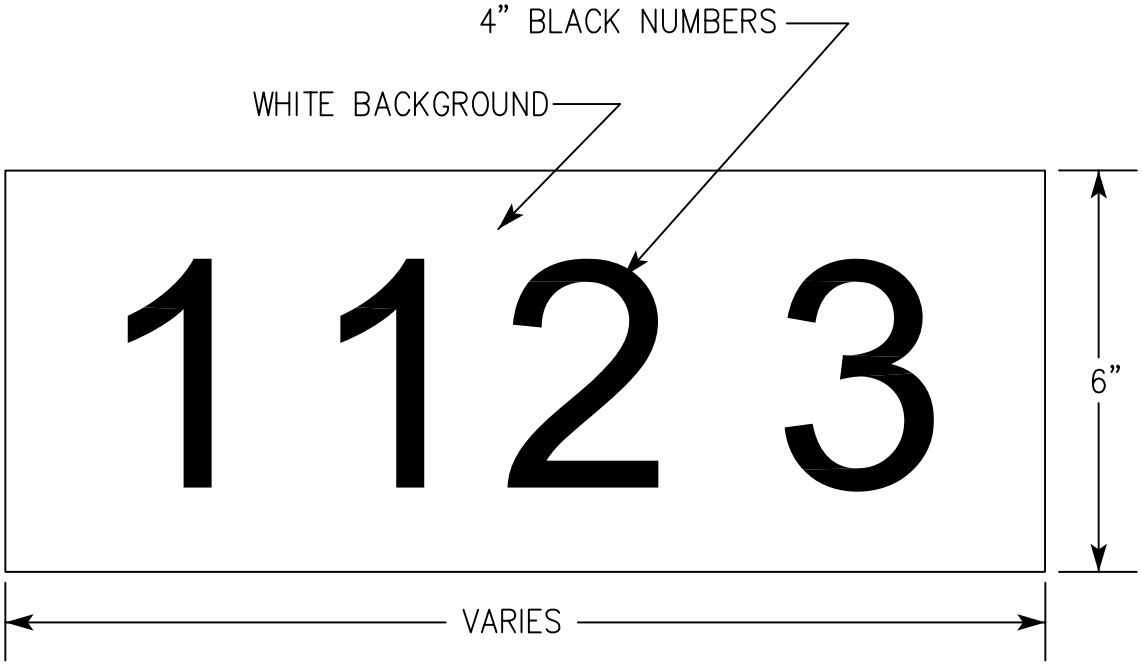

1. NUMBERS TO BE CENTERED ON WHITE BACKGROUND.
2. NUMBERS TO BE PLACED WITHIN 5 FEET OF DRIVEWAY

REV.	APPROVED	DATE	CITY OF CARLSBAD	Glen R. Van Patti	12/11
			PAINTED CURB ADDRESS	CITY ENGINEER	DATE
				SUPPLEMENTAL STANDARD NO.	GS-19

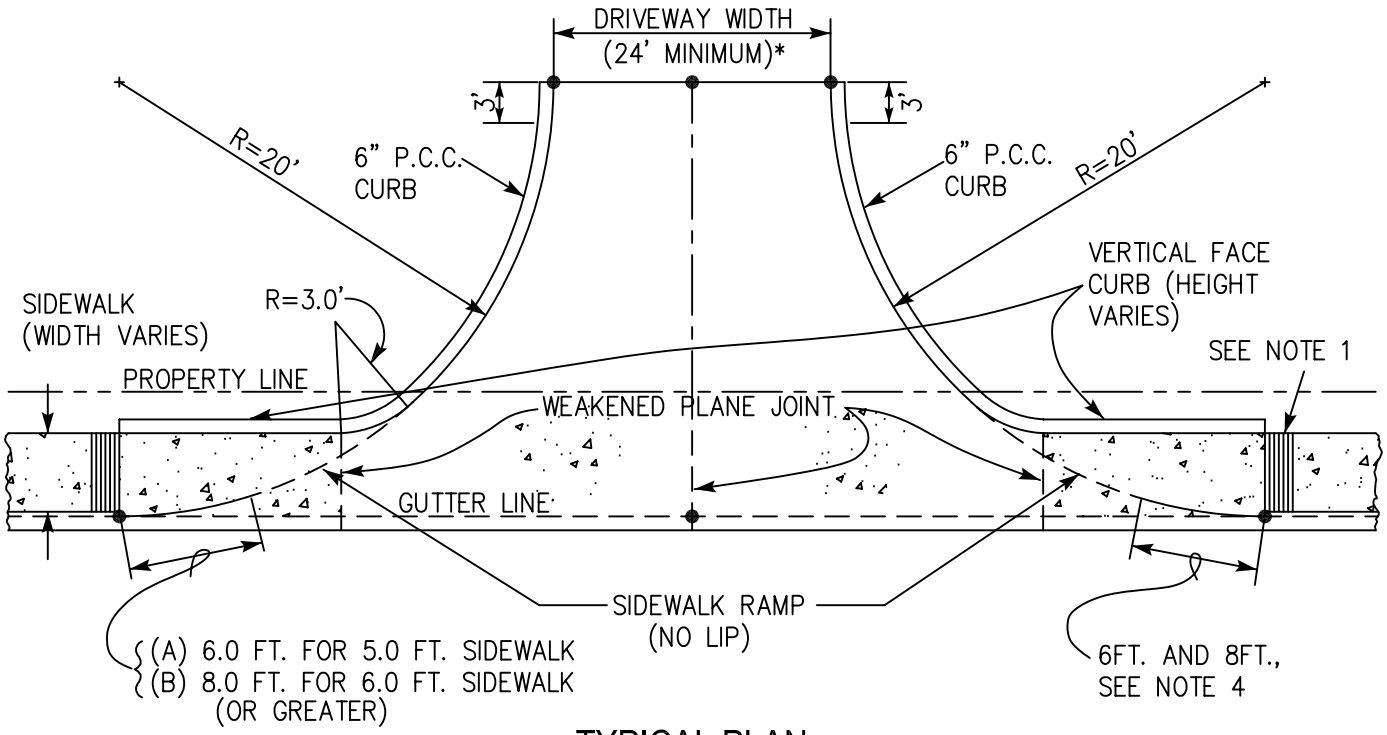

TYPICAL PLAN

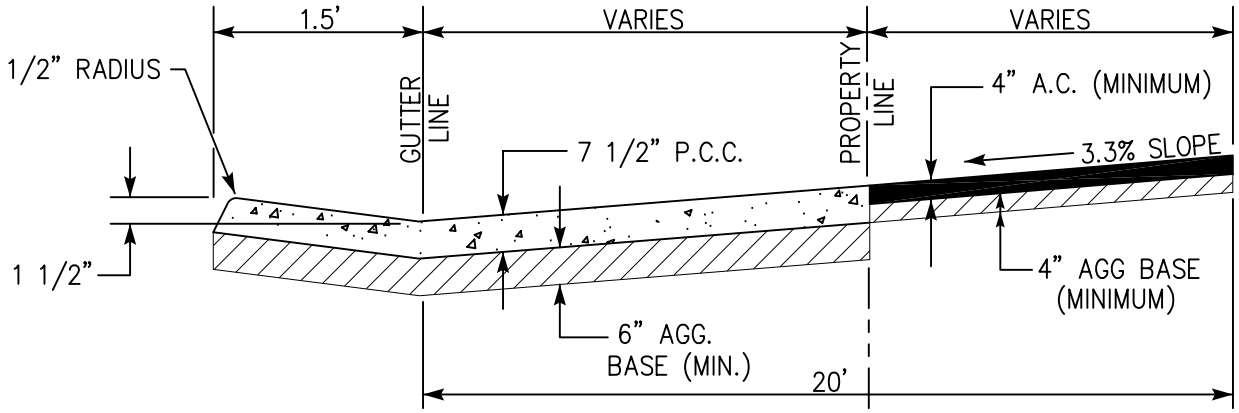

CENTERLINE X-SECTION

1. THE RAMP SHALL HAVE A 12" WIDE BORDER WITH 1/4" DEEP SCORE LINES AND 1/8" RADIUS. THE SPACING SHALL BE APPROXIMATELY 3/4" O.C.
2. ● = ELEVATION SHOWN ON PLANS (TOP OF CURB, AND GUTTER ELEVATION)
3. ALL CONCRETE SHALL BE 560-C-3250
4. TRANSITION FROM FULL HEIGHT CURB TO NO CURB.

* OR AS REQUIRED BY THE CITY ENGINEER

REV.	APPROVED	DATE	CITY OF CARLSBAD		
			ALLEY TYPE DRIVEWAY	CITY ENGINEER	6-04 DATE
				SUPPLEMENTAL STANDARD NO.	GS-20

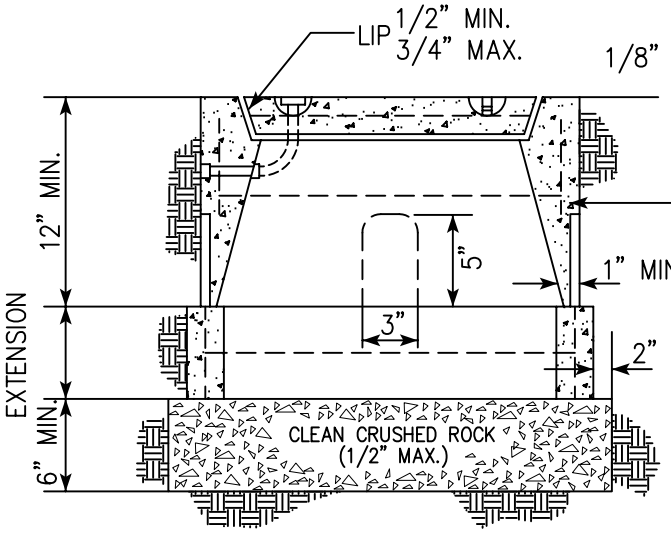

SECTION A-A

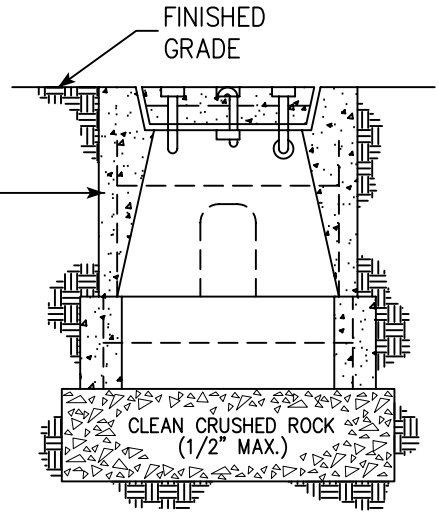

SECTION B-B

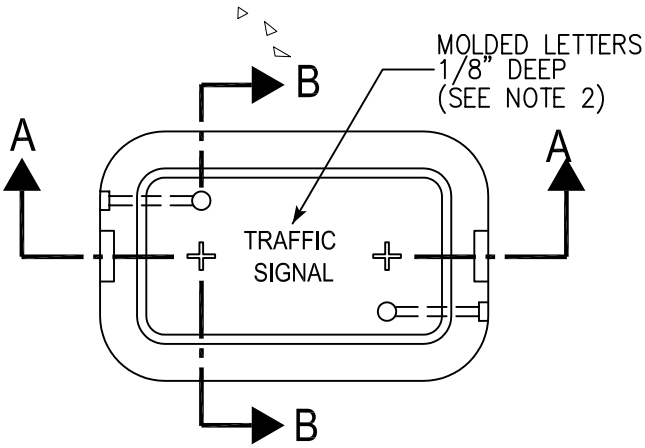

PLAN

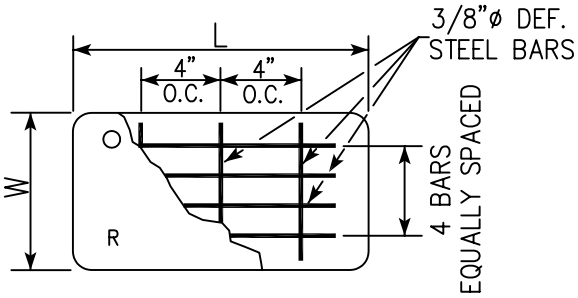

COVER REINFORCING PLAN

TYPE	COVER EDGE THICKNESS	MIN. DEPTH BOX AND EXTENSION	L*	W*	R
31/2	1 3/4"	NO EXTENSION	15 3/8"	10 1/8"	1 1/8"
5	2"	22"	23 1/4"	13 3/4"	1 1/4"

* TOP DIMENSION

NOTES:

1). USE STEEL COVER WHEN SUBJECTED TO TRAFFIC LOADS.

2). PULL BOX COVER SHALL BE MARKED "STREET LIGHTING" WHERE PULL BOX CONTAINS STREET LIGHTING CONDUCTORS ONLY. "HIGH VOLTAGE" SHALL BE ADDED WHERE VOLTAGE IS ABOVE 600 VOLTS.

3). THE L AND W DIMENSIONS OF THE COVER SEAT SHALL BE 1/8" GREATER THAN THE COVER DIMENSIONS.

4). COMPACT EARTH UNDER AND AROUND PULL BOX.

REV.	APPROVED	DATE	CITY OF CARLSBAD	6-04
			PULL BOX FOR TRAFFIC SIGNAL AND STREET LIGHTING	CITY ENGINEER / DATE
				SUPPLEMENTAL STANDARD NO. GS-21

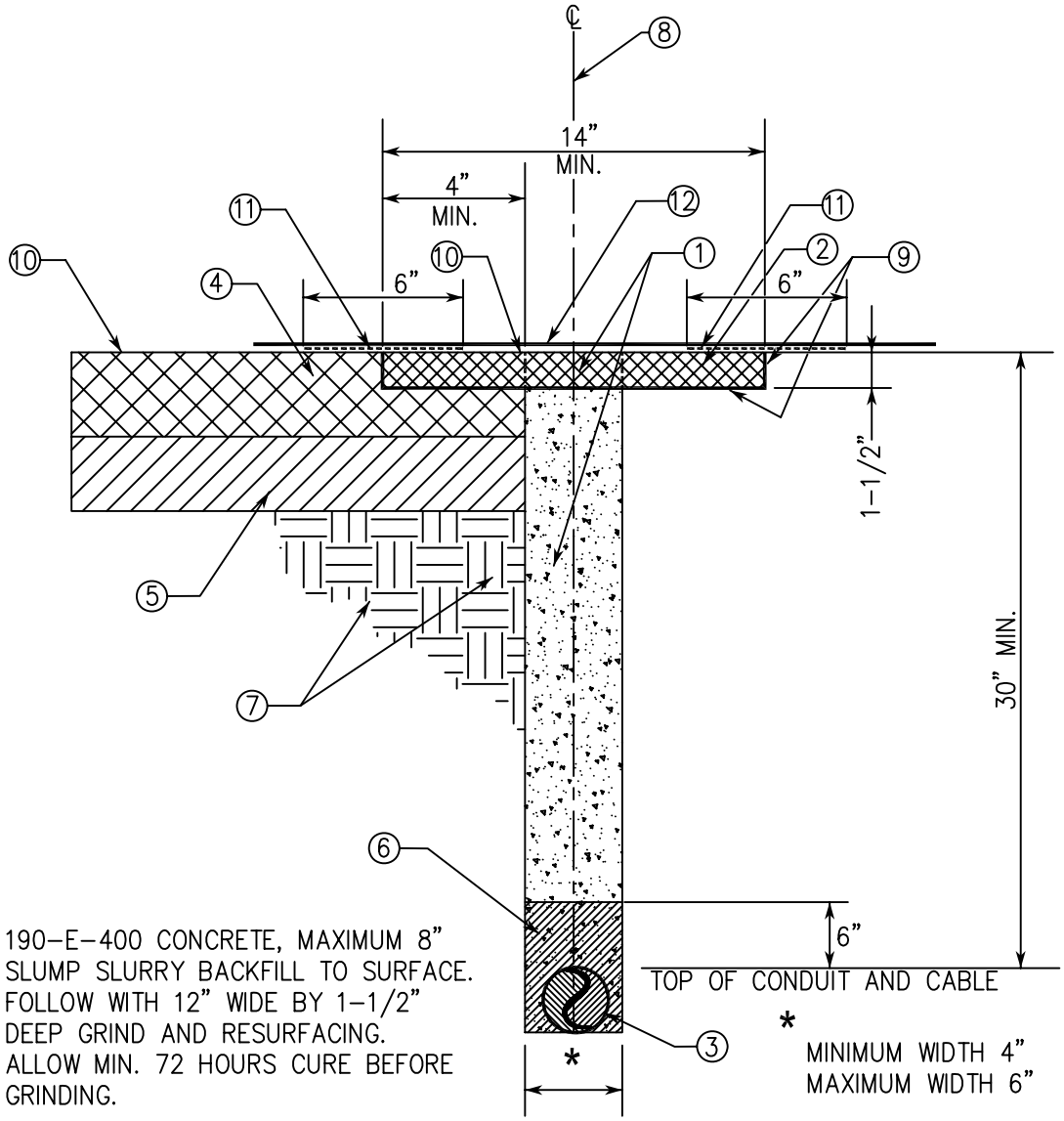

SECTION
N.T.S.

① 190-E-400 CONCRETE, MAXIMUM 8" SLUMP SLURRY BACKFILL TO SURFACE. FOLLOW WITH 12" WIDE BY 1-1/2" DEEP GRIND AND RESURFACING. ALLOW MIN. 72 HOURS CURE BEFORE GRINDING.

② D2-AR-4000 ASPHALT CONCRETE

③ ALL CONDUIT AND CABLE

④ EXISTING A.C. PAVEMENT

⑤ EXISTING BASE MATERIAL

⑥ MORTAR SAND COMPACTED TO 95% RELATIVE DENSITY.

⑦ UNDISTURBED SOIL

⑧ SYMMETRICAL ABOUT CENTERLINE OF TRENCH.

⑨ GRADE SS-1h EMULSIFIED ASPHALT APPLIED AT 0.15 GALLON PER SQUARE YARD.

⑩ EXISTING ASPHALT PAVEMENT FINISHED GRADE, SMOOTHNESS & COMPACTION OF RESURFACING SHALL MEET THE REQUIREMENTS OF SEC 302-5.6.2 SSPWC EXCEPT THAT THE SMOOTHNESS SHALL BE DETERMINED OVER THE LENGTH & WIDTH OF PAVEMENT AREAS DISTURBED BY THE CONTRACTOR'S/ PERMITEE'S OPERATIONS.

⑪ RESPRAY GRADE SS-1h EMULSIFIED ASPHALT AT 0.15 GALLON PER SQUARE YARD 6" WIDE, CENTERED ON EDGE LINE OF GRIND AFTER PLACING A.C. & BEFORE SURFACE TREATMENT.

⑫ SURFACE TREATMENT TO MATCH EXISTING PAVEMENT (E.G. SEAL COAT, CHIP SEAL)

⑬ WHEN THE EDGE OF THE GRIND LINE IS WITHIN 12" OF EDGE OF PAVEMENT, ANY STRUCTURE, AN ADJACENT TRENCH PATCH OR ANY OTHER PAVING JOIN LINE THE 1-1/2" DEEP GRIND SHALL BE EXTENDED TO THE EXISTING STRUCTURE OR JOIN LINE.

REV.	APPROVED	DATE	CITY OF CARLSBAD		
			NARROW TRENCH BACKFILL & ASPHALT CONCRETE RESURFACING	Glen R. Van Peski CITY ENGINEER	12/11 DATE
				SUPPLEMENTAL STANDARD NO.	GS-24

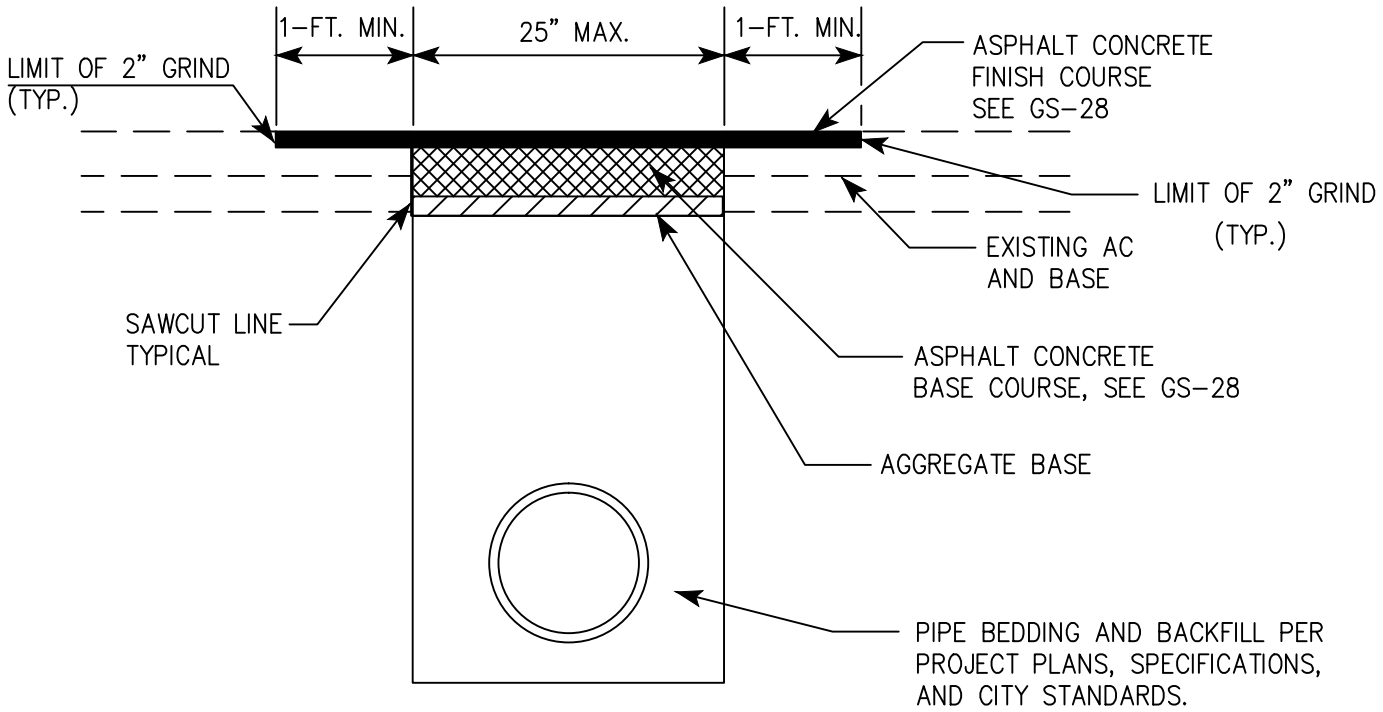

NOTES:

1. THE DETAIL SHOWN ABOVE APPLIES TO TRENCH WIDTHS LESS THAN 25 INCHES.
2. EXISTING A.C. SHALL BE CUT AND REMOVED IN SUCH A MANNER SO AS NOT TO TEAR, BULGE OR DISPLACE ADJACENT PAVEMENT. EDGES SHALL BE CLEAN AND VERTICAL. ALL CUTS SHALL BE PARALLEL OR PERPENDICULAR TO STREET CENTERLINE, WHEN PRACTICAL.
3. BASE MATERIAL SHALL BE REPLACED TO DEPTH OF EXISTING BASE. A.C. MAY BE SUBSTITUTED FOR BASE MATERIAL AT THE CITY ENGINEER'S DISCRETION.
4. WHEN THE EDGE OF THE GRIND AREA IS WITHIN 24 INCHES OF EDGE OF PAVEMENT, ANY STRUCTURE, AN ADJACENT TRENCH PATCH OR OTHER PAVING JOIN LINE, THE GRIND AREA SHALL BE EXTENDED TO THE EXISTING STRUCTURE OR JOIN LINE.
5. WHEN THE EDGE OF THE GRIND LIES WITHIN A WHEEL PATH, THE GRIND AREA SHALL BE EXTENDED TO THE NEAREST LANE LINE OR EDGE OF PAVEMENT.

REV.	APPROVED	DATE	CITY OF CARLSBAD	Robert T. Johnson Jr.	2/10
			TRENCH RESURFACING ASPHALT CONCRETE PAVEMENT FOR TRENCH WIDTHS LESS THAN 25"	CITY ENGINEER	DATE
				SUPPLEMENTAL STANDARD NO.	GS-25

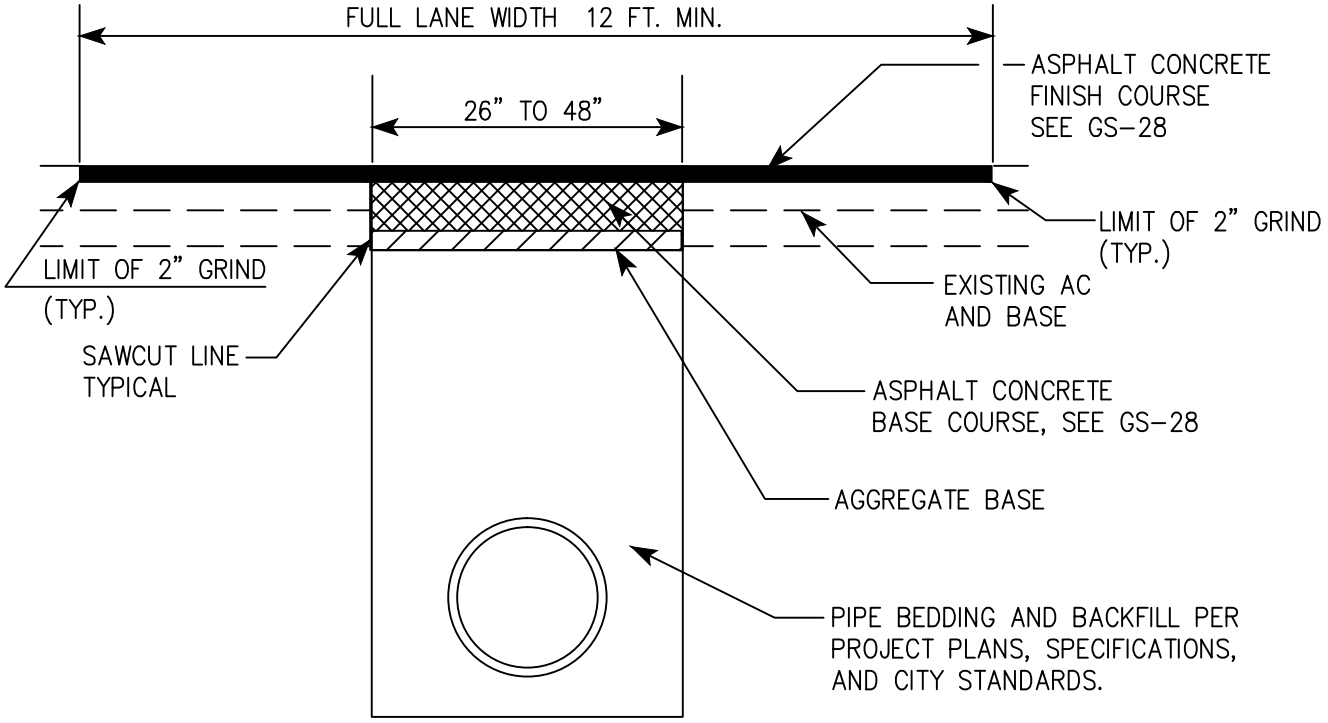

NOTES:

1. THE DETAIL SHOWN ABOVE APPLIES TO TRENCH WIDTHS FROM 26 INCHES TO 48 INCHES.
2. EXISTING A.C. SHALL BE CUT AND REMOVED IN SUCH A MANNER SO AS NOT TO TEAR, BULGE OR DISPLACE ADJACENT PAVEMENT. EDGES SHALL BE CLEAN AND VERTICAL. ALL CUTS SHALL BE PARALLEL OR PERPENDICULAR TO STREET CENTERLINE, WHEN PRACTICAL.
3. BASE MATERIAL SHALL BE REPLACED TO DEPTH OF EXISTING BASE. A.C. MAY BE SUBSTITUTED FOR BASE MATERIAL AT THE CITY ENGINEER'S DISCRETION.
4. WHEN THE EDGE OF THE GRIND AREA IS WITHIN 24 INCHES OF EDGE OF PAVEMENT, ANY STRUCTURE, AN ADJACENT TRENCH PATCH, OR OTHER PAVING JOIN LINE, THE GRIND AREA SHALL BE EXTENDED TO THE EXISTING STRUCTURE OR JOIN LINE.
5. WHEN THE EDGE OF THE GRIND LIES WITHIN A WHEEL PATH, THE GRIND AREA SHALL BE EXTENDED TO THE NEAREST LANE LINE OR EDGE OF PAVEMENT.

REV.	APPROVED	DATE	CITY OF CARLSBAD	Robert T. Johnson Jr. 2/10
			TRENCH RESURFACING ASPHALT CONCRETE PAVEMENT FOR TRENCH WIDTHS FROM 26" TO 48"	CITY ENGINEER DATE
				SUPPLEMENTAL STANDARD NO. GS-26

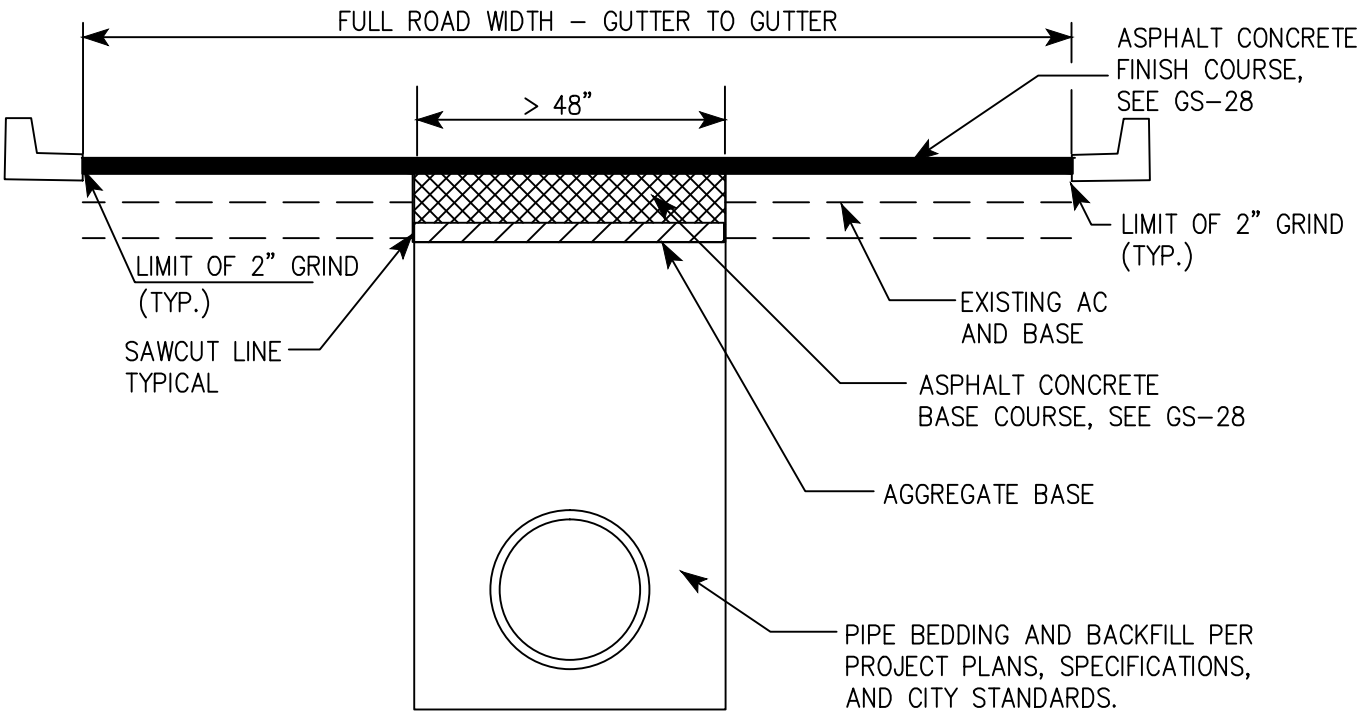

NOTES:

1. THE DETAIL SHOWN ABOVE APPLIES TO TRENCH WIDTHS GREATER THAN 48 INCHES.
2. EXISTING A.C. SHALL BE CUT AND REMOVED IN SUCH A MANNER SO AS NOT TO TEAR, BULGE OR DISPLACE ADJACENT PAVEMENT. EDGES SHALL BE CLEAN AND VERTICAL. ALL CUTS SHALL BE PARALLEL OR PERPENDICULAR TO STREET CENTERLINE, WHEN PRACTICAL.
3. BASE MATERIAL SHALL BE REPLACED TO DEPTH OF EXISTING BASE. A.C. MAY BE SUBSTITUTED FOR BASE MATERIAL AT THE CITY ENGINEER'S DISCRETION.

REV.	APPROVED	DATE	CITY OF CARLSBAD	Robert T. Johnson Jr. 2/10
			TRENCH RESURFACING ASPHALT CONCRETE PAVEMENT FOR TRENCH WIDTHS GREATER THAN 48"	CITY ENGINEER DATE SUPPLEMENTAL STANDARD NO. GS-27

NOTES:

1. A TACK COAT OF ASPHALTIC EMULSION OR PAVING ASPHALT SHALL BE APPLIED TO EXISTING A.C. OR P.C.C. CONTACT SURFACES PRIOR TO RESURFACING PER SSPWC SECTION 302-5.
2. ASPHALT CONCRETE RESURFACING - BASE COURSE:
   a. MINIMUM TOTAL A.C. THICKNESS SHALL BE ONE INCH GREATER THAN EXISTING A.C.
   b. A.C. SHALL BE B-PG64-10 FOR BASE COURSE, PER SECTION 203-6 OF SSPWC.
   c. BASE COURSE SHALL BE LAID DOWN WITH SELF PROPELLED PAVING MACHINE AND AND COMPACTED PER SSPWC SECTION 302-5.
3. ASPHALT CONCRETE RESURFACING (FINISH COURSE):
   a. PROVIDE 2 INCH DEEP GRIND AND A.C. FINISH COURSE C2-PG64-10 PER SECTION 203-6 OF SSPWC.
   b. FINISH COURSE FOR RESURFACING SHALL BE LAID DOWN USING A SELF-PROPELLED PAVING MACHINE AND COMPACTED.
   c. SMOOTHNESS AND COMPACTION OF RESURFACING SHALL MEET THE REQUIREMENTS OF SEC 302-5 SSPWC EXCEPT THAT THE SMOOTHNESS SHALL BE DETERMINED OVER THE LENGTH AND WIDTH OF PAVED AREAS DISTURBED BY THE CONTRACTOR'S OPERATIONS.
4. SURFACE TREATMENT TO MATCH EXISTING PAVEMENT SURFACE (SLURRY, CHIP SEAL, ETC.)
5. SLOUGHING OF TRENCH UNDER PAVEMENT SHALL BE CAUSE FOR REQUIRING ADDITIONAL PAVEMENT AND BASE.

REV.	APPROVED	DATE	CITY OF CARLSBAD	Robert T. Johnson Jr. 2/10
			NOTES FOR ASPHALT CONCRETE TRENCH RESURFACING	CITY ENGINEER DATE
				SUPPLEMENTAL STANDARD NO. GS-28

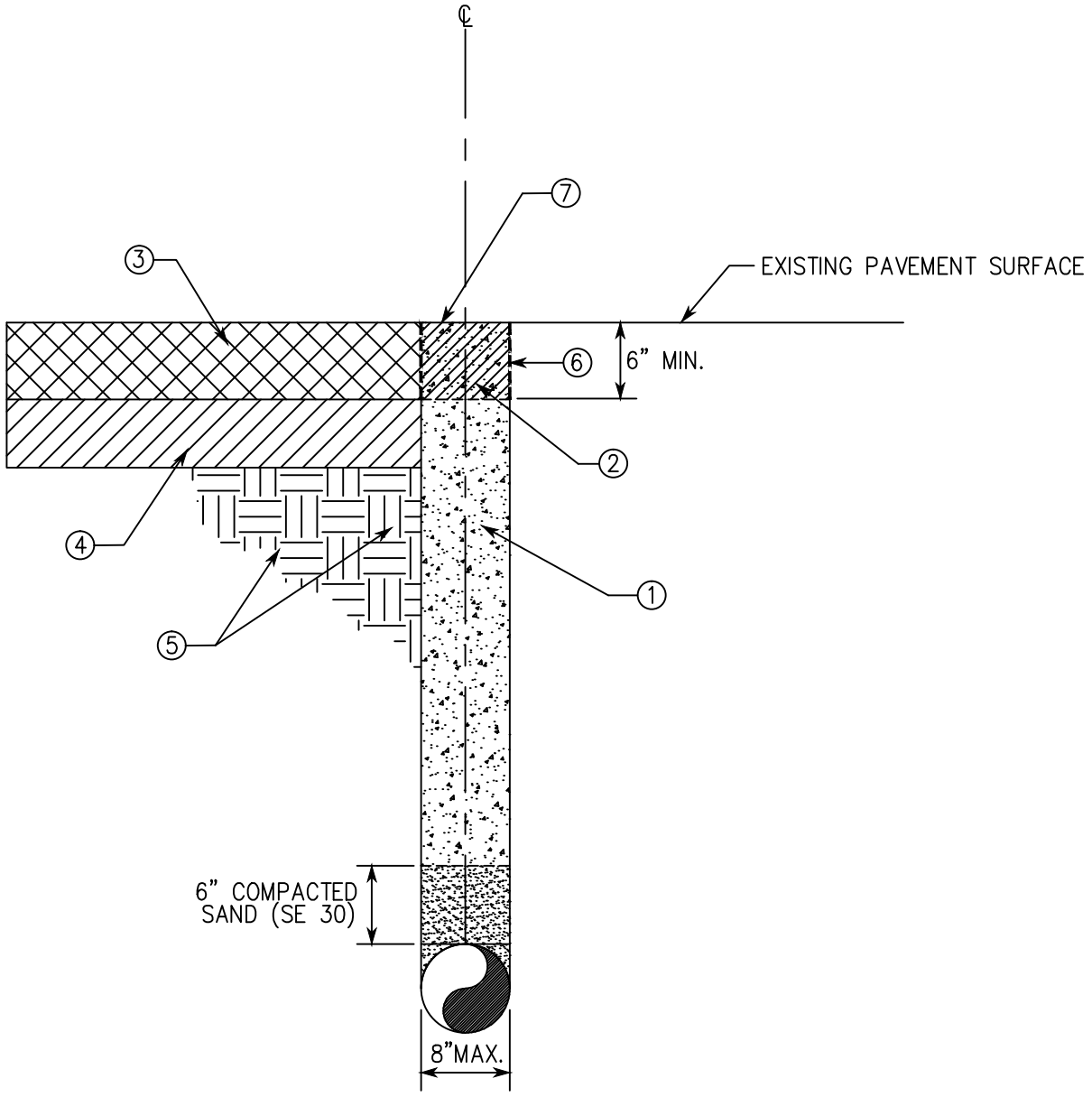

SECTION
N.T.S.

1. 190-E-400 CONCRETE, 6"-8" SLUMP SLURRY BACKFILL. ALLOW MINIMUM 72 HOURS TO CURE.
2. D2-PG64-10 ASPHALT CONCRETE TO MATCH EXISTING PAVEMENT ELEVATION AND THICKNESS AFTER COMPACTION (6" MIN. DEPTH).ASPHALT CONCRETE SHALL MEET THE REQUIREMENTS OF SEC 203-6 AND SEC 302-5 SSPWC.
3. EXISTING A.C. PAVEMENT
4. EXISTING BASE MATERIAL
5. UNDISTURBED SOIL
6. TACK COAT SHALL BE APPLIED TO ALL CONTACT SURFACES PER SEC 302-5.4 OF SSPWC (TYP.).
7. SURFACE TREATMENT TO MATCH EXISTING PAVEMENT (E.G. SEAL COAT, CHIP SEAL, SLURRY SEAL).

REV.	APPROVED	DATE	CITY OF CARLSBAD	Robert T. Johnson Jr. 2/10
			EXPLORATORY UTILITY POTHOLE BACKFILL & RESURFACING (DIAM. ≤ 8 IN.)	CITY ENGINEER DATE
				SUPPLEMENTAL STANDARD NO. GS-29

1. THE REMOVAL OF EXISTING CONCRETE CURB, GUTTER, SIDEWLK AND PAVEMENT FOR PEDESTRIAN RAMP INSTALLATION SHALL COMPLY WITH SDRSD G-11.
2. AREAS SHOWN THUS: SHALL HAVE A HEAVY BROOM "RIPPLE" TEXTURE FINISH, TRANSVERSE TO AXIS OF RAMP CONTRASTING VISUALLY WITH ADJOINING SURFACES.
3. AREAS SHOWN THUS: ARE THE MINIMUM REQUIRED FOR A COMPLETE RAMP INSTALLATION AND SHALL BE CONCRETE CLASS 520-C-2500.
4. IF OBSTRUCTIONS SUCH AS INLETS, UTILITY POLES, FIRE HYDRANTS, ETC. ARE ENCOUNTERED, THE RAMP LOCATIONS MAY BE ADJUSTED UPON THE APPROVAL OF THE RESIDENT ENGINEER.
5. RAMP SLOPE SHALL BE A MINIMUM GRADE OF 15:1.
6. THE RAMP SLOPES WILL BE MEASURED RELATIVE TO THE SIDEWALK SLOPE, SEE DETAIL A BELOW. ADJOINING SLOPE BEYOND RAMP SHALL NOT EXCEED 20:1 (5%).

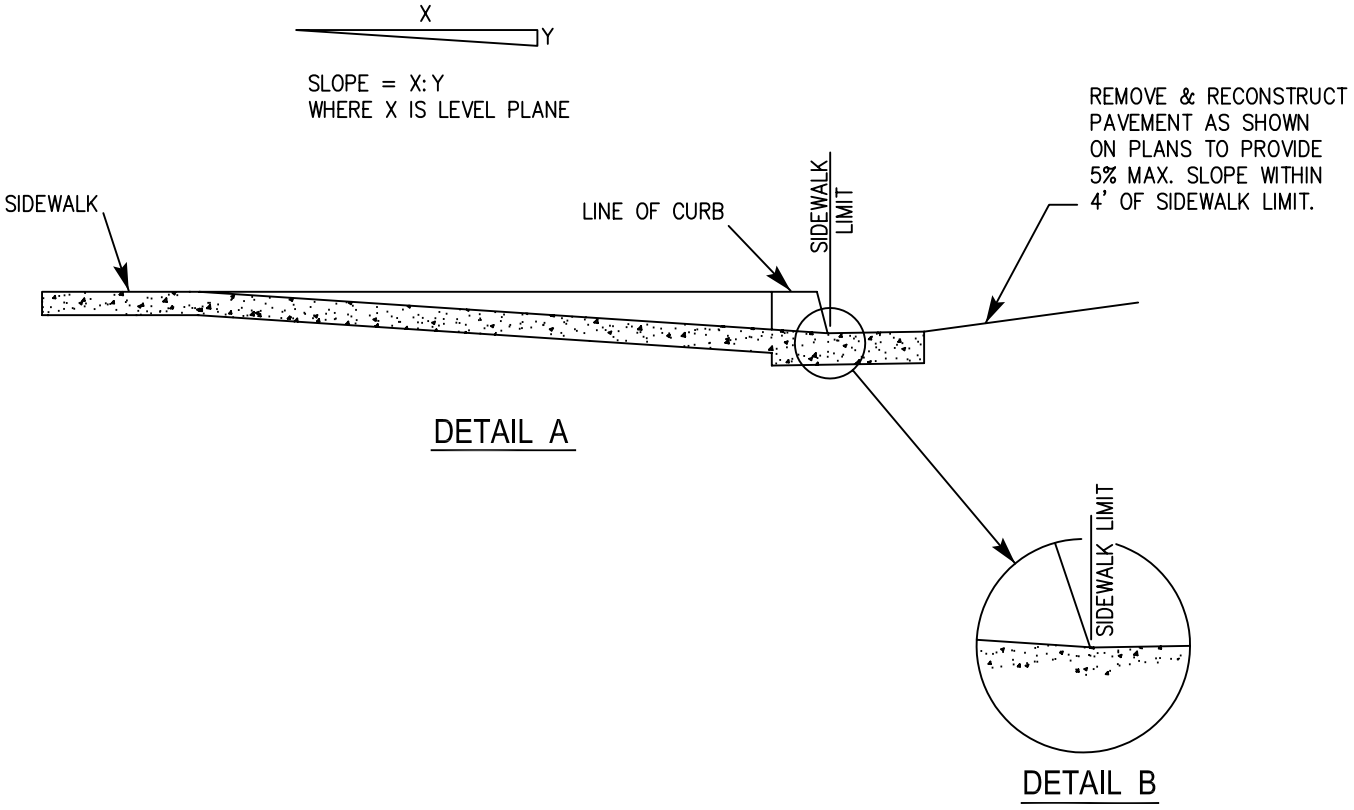

REV.	APPROVED	DATE	CITY OF CARLSBAD	
			GENERAL NOTES FOR PEDESTRIAN RAMPS	CITY ENGINEER 6-04 DATE
				SUPPLEMENTAL STANDARD NO. GS-32

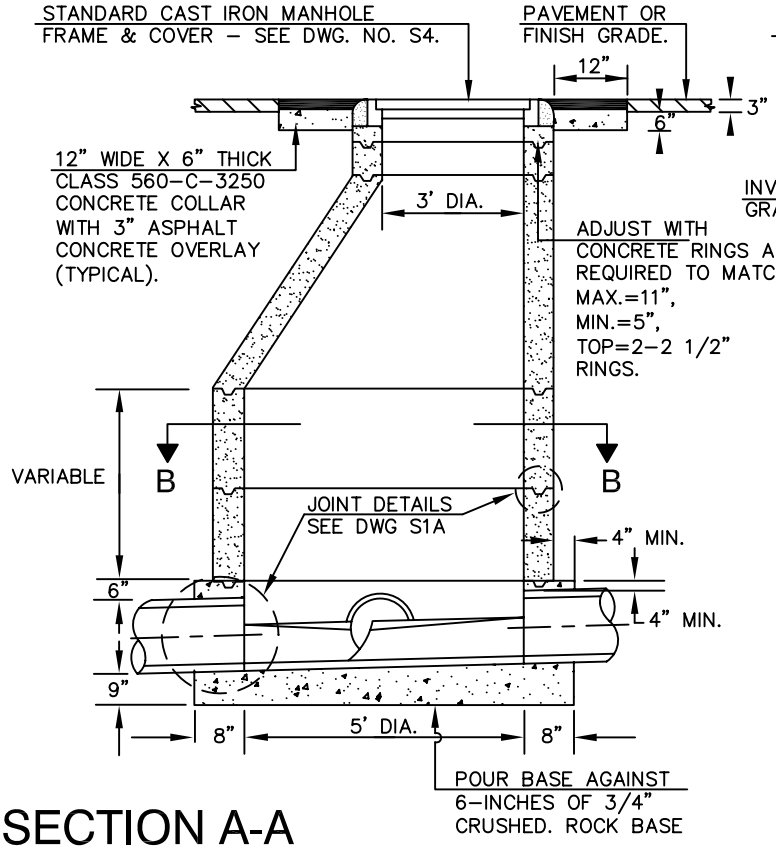

SECTION A-A

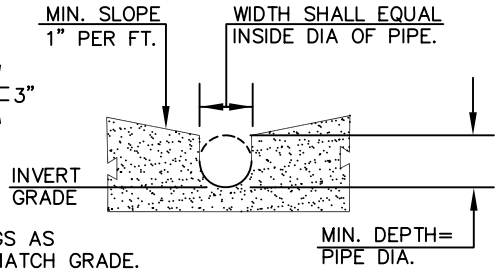

SECTION C-C

NOTES:

CAST IN PLACE CONCRETE FOR BASE SHALL BE TYPE 560–B–3250.

ALL PIPE IN MANHOLE SHALL BE PVC AND SHALL BE INCLUDED AS PART OF MANHOLE.

MANHOLE SHALL BE CONSTRUCTED IN ACCORDANCE WITH ASTM C–478.

STUB OUTS SHALL HAVE A MINIMUM LENGTH OF 3 FEET BEYOND MANHOLE.

SDR 35 PVC PIPE MAY BE INSTALLED IN STRAIGHT–THROUGH MANHOLES WITH NO JUNCTIONS. THE TOP SECTION OF PIPE SHALL BE REMOVED FLUSH WITH TOP OF SHELF. CUTS SHALL BE NEAT AND DRESSED MINIMIZING BURRS AND ROUGH EDGES.

EACH SHAFT AND RISER JOINT SHALL BE SEALED PER JOINT DETAIL ON DWG S–1A WITH BUTYL RUBBER SEALANT ROPE.

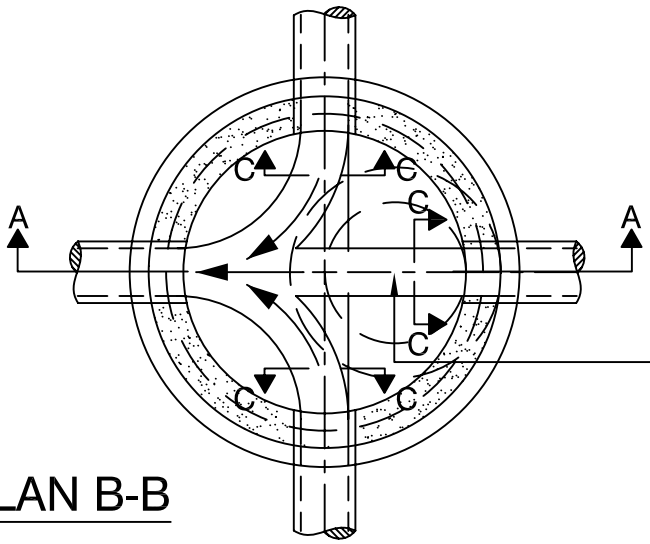

PLAN B-B

WHEN MANHOLE FORMS THE JUNCTION OF SEWERS AND/OR AN ANGLE IN MAIN ALIGNMENT, SPECIAL CARE SHALL BE USED IN FORMING THE CHANNELS TO FACILITATE THE FLOW OF SEWAGE. INVERTS SHALL BE TRUE TO GRADE AND ALIGNMENT, FINISHED WITH SMOOTH SURFACE, AND MAINTAIN 0.2' DROP.

NOT TO SCALE

REV.	APPROVED	DATE	CITY OF CARLSBAD	Glen K. Van Pelt 12/11
			STANDARD SEWER MANHOLE	CITY ENGINEER DATE
				SUPPLEMENTAL STANDARD NO. S-1

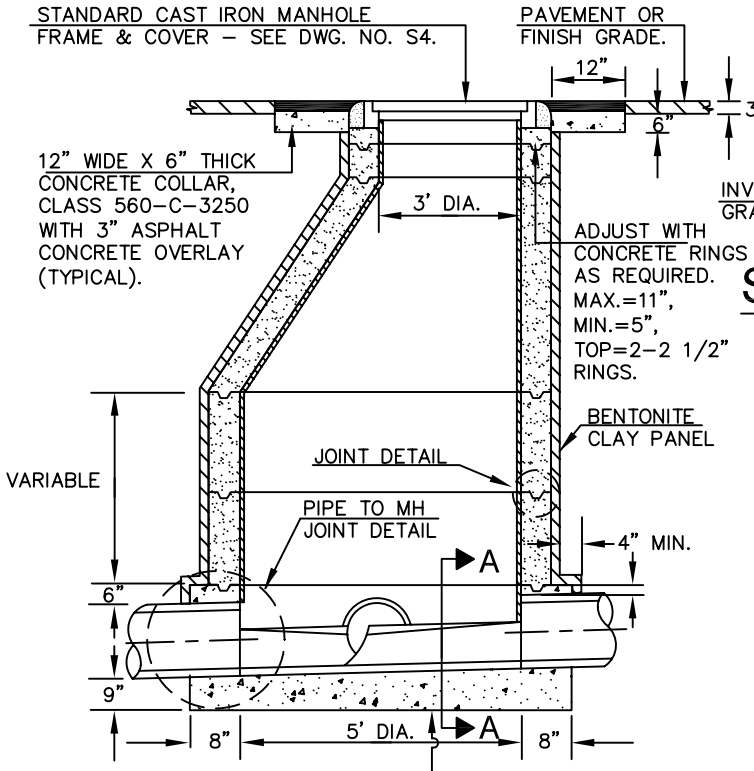

MANHOLE PROFILE

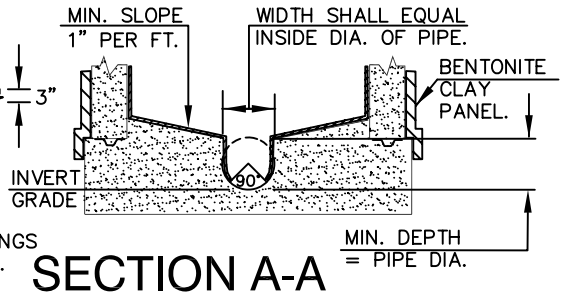

SECTION A-A

NOTES:

MANHOLE TO BE CONSTRUCTED IN ACCORDANCE WITH S-1 AND THE FOLLOWING NOTES.

INSTALL 1" WELD STRIPS WHERE T-LOCK IS WELDED; I.E., TOP OF CHANNEL, SHAFT TO SHELF, TURN BACK TO PIPE FACE, CORNERS, ETC.

PVC TURN BACK ON PVC PIPING SHALL BE A MINIMUM OF 6".

PVC TURN BACK SHALL BE HELD TIGHT TO PVC PIPING BY 1/2" STEEL BAND WITH CONTACT CEMENT ADHESIVE APPLIED TO BOTH SURFACES.

NO FLAT SHEET PVC SHALL BE USED. FORM IN T-LOCK OR ARROWLOCK ON SHELF AND CHANNEL. OVERLAP PVC ONTO MANHOLE SHAFT AND CHANNEL LINER; WELD TO BOTH AND COMPLETE WITH 1" WELD STRIPS.

INSTALL NONSKID SURFACE ON MANHOLE SHELF.

INSTALL PRE FORMED AMER-PLATE 95Y PVC SLEEVE UNDER FRAME AT TOP OPENING.

WELD 4" JOINT STRIPS AND FINISH BOTH EDGES WITH 1" WELD STRIPS.

COMPLETE CONCRETE CHANNEL SHALL BE CONSTRUCTED WITH FORMS AND ALL BUT THE LOWER 90° SHALL BE T-LOCK LINED. THE "T'S" SHALL RUN VERTICAL AS IN THE MANHOLE SHAFT AND SHALL BE TACKED AT THE TERMINUS OF THE T-LOCK.

SIDES AND ENDS OF THE BASE TO BE EITHER FORMED, SANDBAGGED OR POURED AGAINST UNDISTURBED EARTH.

MANHOLE SHELVES TO BE SLOPED 1" PER FOOT TO CHANNEL.

WRAP MANHOLE JOINTS BELOW WATER TABLE WITH BENTONITE GEOTEXTILE WATERPROOFING SYSTEM, VOLCLAY VOLTEX OR APPROVED EQUAL.

ALL LINER JOINTS SHALL BE HEAT WELDED BY WELDERS CERTIFIED BY THE PVC MANUFACTURER. LINER WILL BE SPARK TESTED AT 20,000 VOLTS MIN.

EPOXY COATING SYSTEM MAY BE USED IN LIEU OF PVC LINING FOR THE SHELF AND CHANNEL OF THE MANHOLE. COATING SYSTEM SHALL BE APPROVED BY CITY ENGINEER AND SUBJECT TO SPECIAL INSPECTION.

ANGLES OR JUNCTIONS SHALL HAVE 0.2' MIN. DROP THROUGH MANHOLE

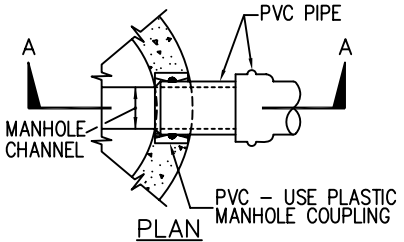

PLAN

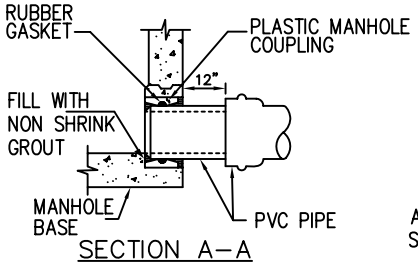

SECTION A-A

PIPE TO MANHOLE CONNECTION DETAIL

NOT TO SCALE

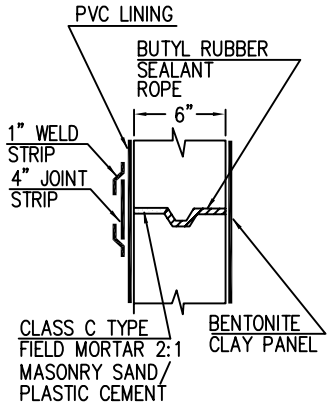

JOINT DETAIL

ALL CONCRETE TO CONCRETE JOINTS SHALL BE NOTCHED

REV.	APPROVED	DATE	CITY OF CARLSBAD		
			PVC LINED MANHOLE	Glen R. Van Peski CITY ENGINEER	12/11 DATE
				SUPPLEMENTAL STANDARD NO.	S-1A

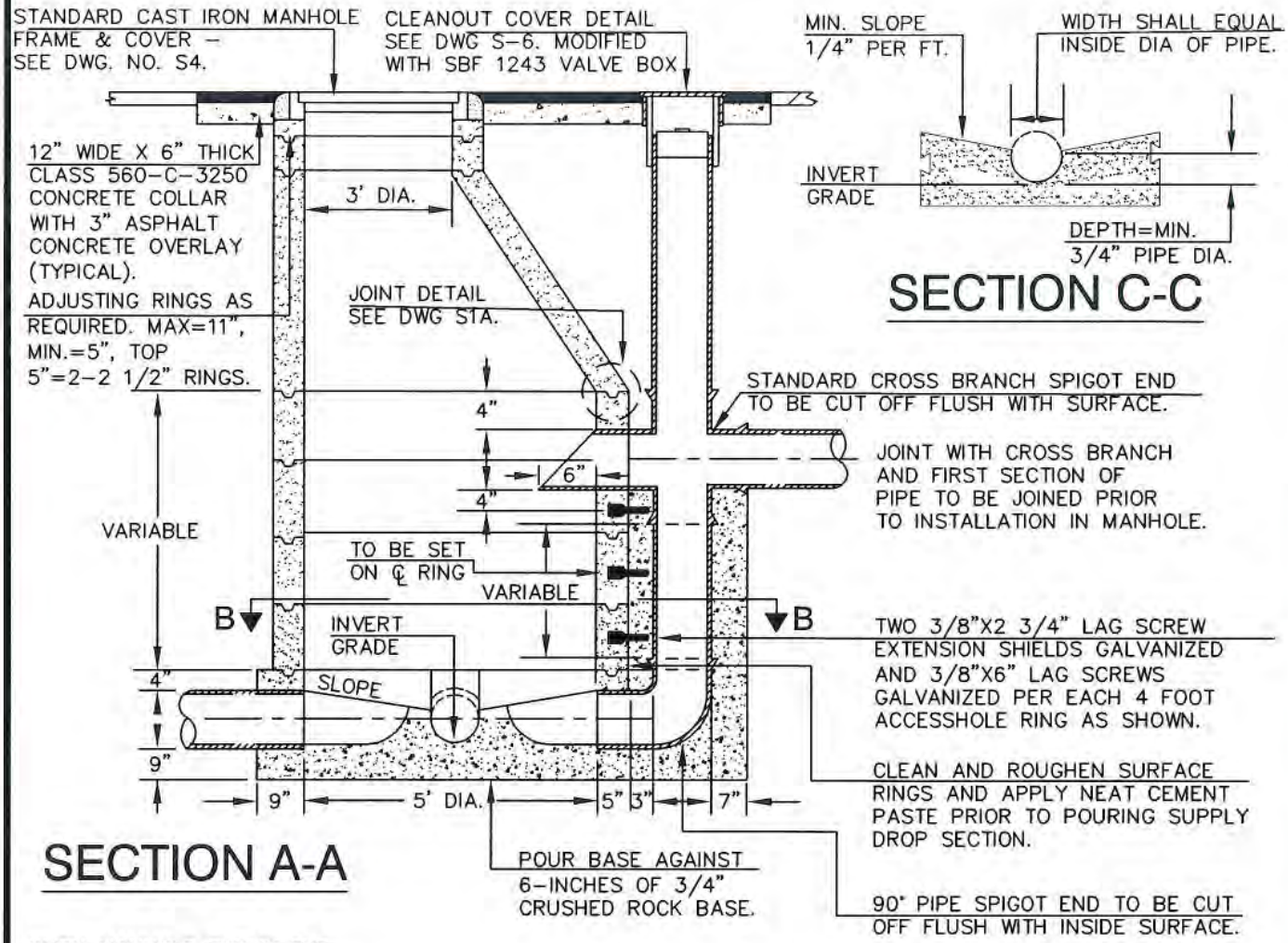

SECTION C-C

SECTION A-A

WHEN MANHOLE FORMS THE JUNCTION OF SEWERS AND/OR AN ANGLE IN MAIN ALIGNMENT, SPECIAL CARE SHALL BE USED IN FORMING THE CHANNELS TO FACILITATE THE FLOW OF SEWAGE. INVERTS SHALL BE TRUE TO GRADE AND ALIGNMENT AND FINISHED WITH SMOOTH SURFACE.

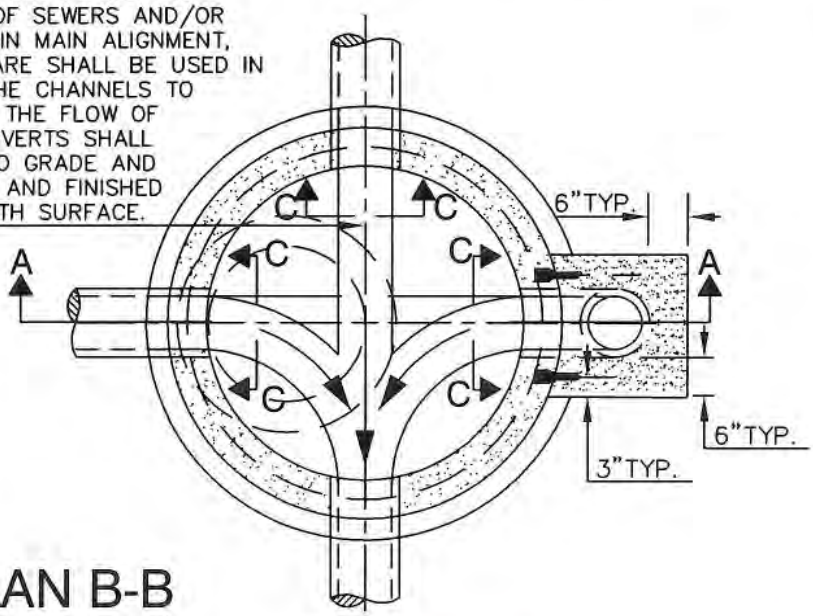

PLAN B-B

NOTES:

ALL CAST IN PLACE CONCRETE SHALL BE TYPE 560-B-3250.

ALL PIPE IN MANHOLE SHALL BE PVC OR VITRIFIED CLAY PIPE AND SHALL BE INCLUDED AS PART OF MANHOLE.

DOUBLE DROP MANHOLE IS CONSTRUCTED THE SAME AS DROP MANHOLE EXCEPT THAT IT HAS TWO DROP SECTIONS.

REV.	APPROVED	DATE	CITY OF CARLSBAD	Robert T. Johnson Jr. 7/10/08 CITY ENGINEER DATE
			DROP MANHOLE	SUPPLEMENTAL STANDARD NO. S-2

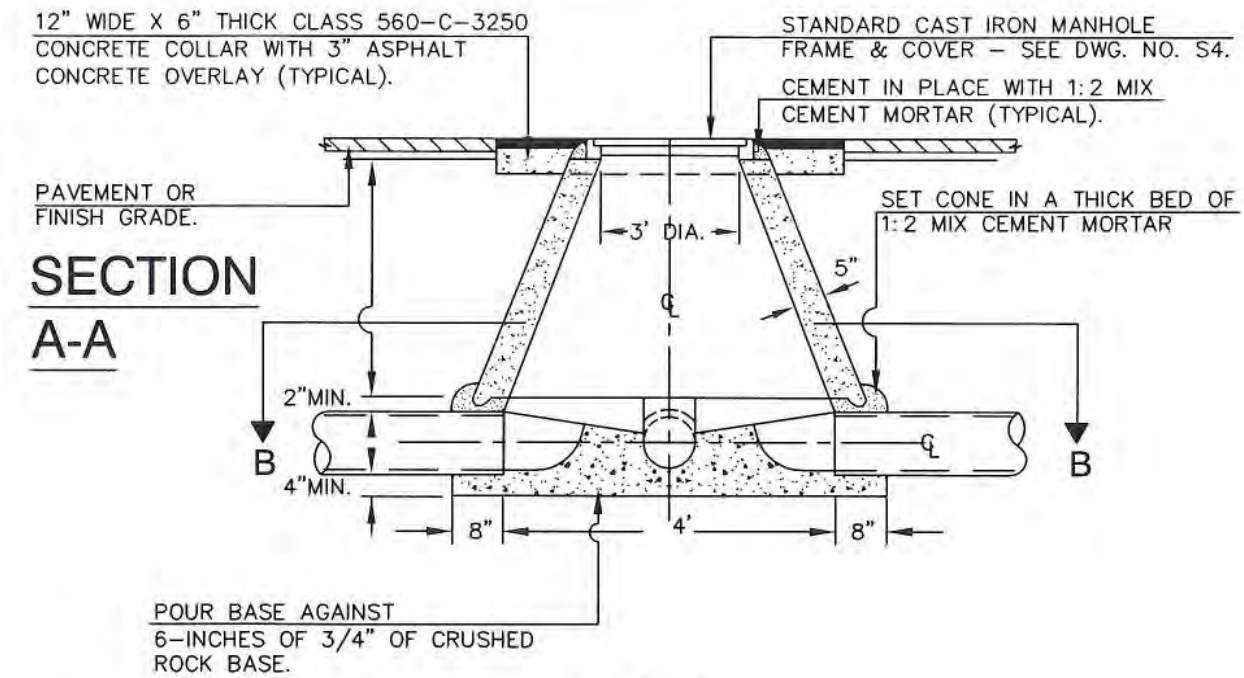

SECTION A-A

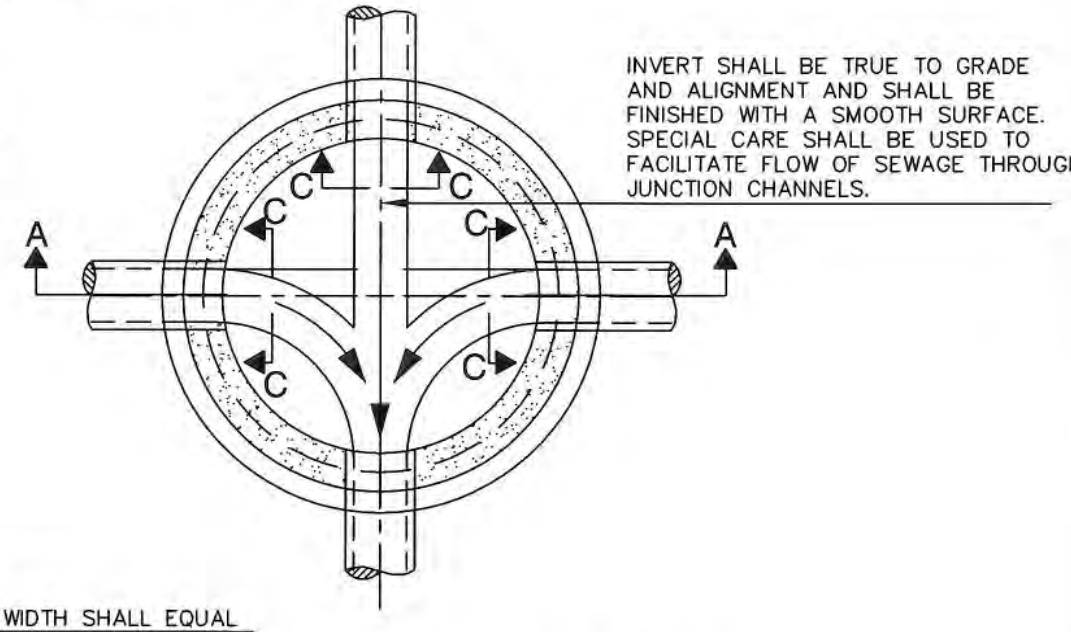

PLAN B-B

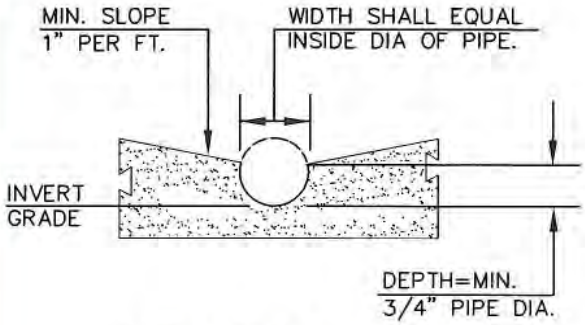

SECTION C-C

NOTES:

ALL CAST IN PLACE CONCRETE SHALL BE TYPE 560-B-3250.

MANHOLE SHALL BE CONSTRUCTED IN ACCORDANCE WITH ASTM C-478.

STUB OUTS SHALL HAVE A MINIMUM LENGTH OF 3 FEET.

REV.	APPROVED	DATE	CITY OF CARLSBAD	Robert T. Johnson Jr. 7/10/08
			SHALLOW MANHOLE	CITY ENGINEER / DATE
				SUPPLEMENTAL STANDARD NO. S-3

HALF PLAN FRAME & COVER

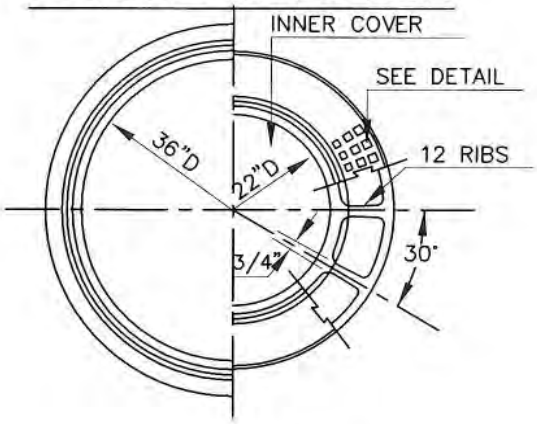

INNER COVER TOP SIDE

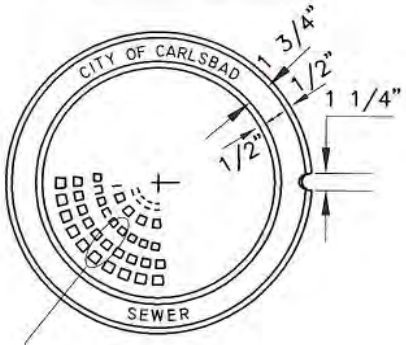

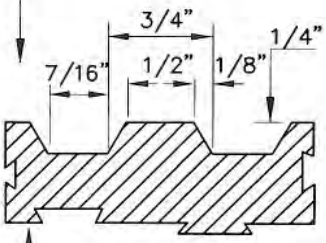

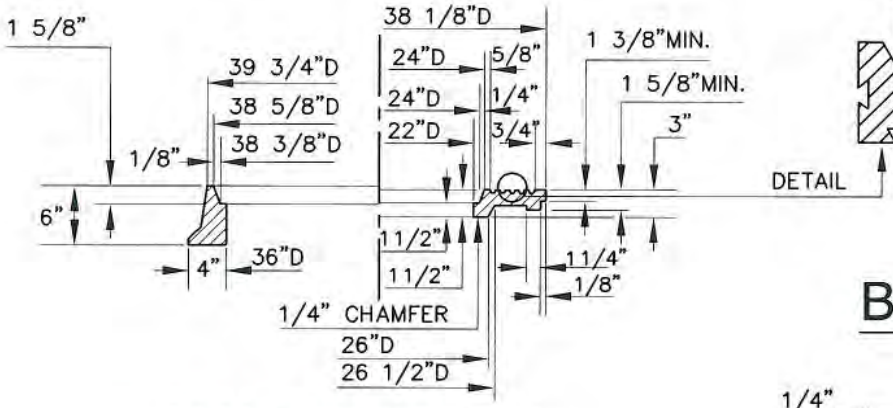

HALF SECTION FRAME & COVER

BOTTOM SIDE

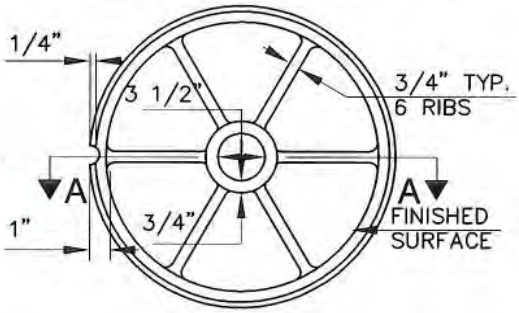

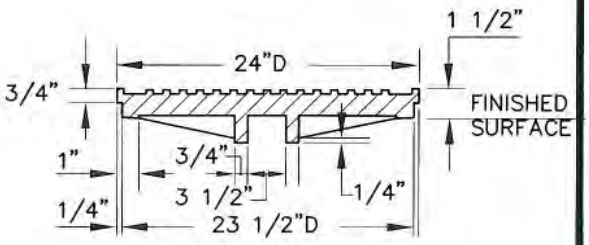

SECTION A-A

NOTES:

1. WEIGHTS:
   - INNER COVER =155 LBS.
   - OUTER COVER =300 LBS.
   - FRAME =330 LBS.
2. MATERIAL: CAST IRON.
3. MACHINE SEATS TO PREVENT NOISE.
4. FILLET RADII TO BE 12".
5. IMPORTED COVERS AND FRAMES SHALL HAVE CONTRY OF ORIGIN MARKING IN COMPIANCE WITH FEDERAL REGULATIONS.

REV.	APPROVED	DATE	CITY OF CARLSBAD	
			MANHOLE FRAME & COVER	Robert T. Johnson Jr. 7/10/08 CITY ENGINEER DATE
				SUPPLEMENTAL STANDARD NO. S-4

TYPICAL TRENCH SECTION

WITH DIMENSIONS AND COMPACTION ZONES

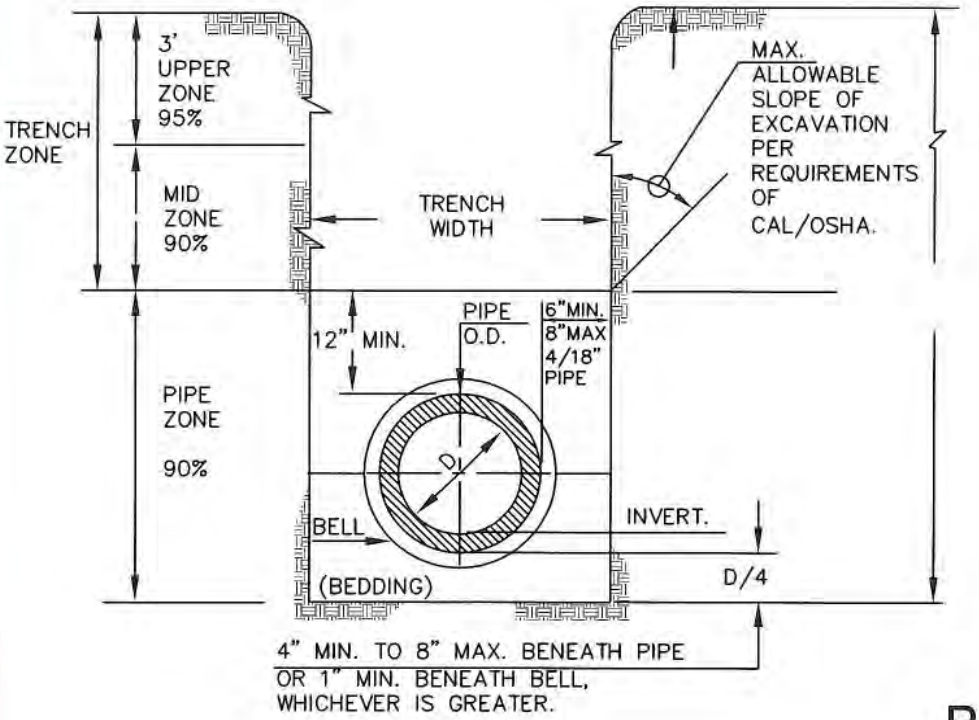

P.V.C. PIPE

PIPE ZONE

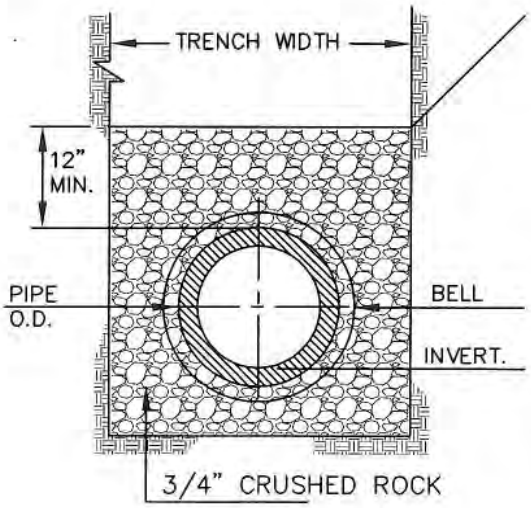

NOTES:

1. PERCENTAGES SHOWN EQUAL MINIMUM RELATIVE COMPACTION.
2. MINIMUM DEPTH OF COVER FROM TOP OF PIPE TO FINISH GRADE FOR ALL SANITARY SEWER INSTALLATIONS SHALL BE 3 FEET. FOR COVER LESS THAN 3', SPECIAL DESIGN AND APPROVAL REQUIRED.
3. TRENCH ZONE BACKFILL SHALL BE PER SECTION 02223. NO ROCKS LARGER THAN 4" IN ANY DIMENSION WILL BE ALLOWED IN BACKFILL. ASPHALT OR CONCRETE CHUNKS WILL NOT BE ALLOWED.

REV.	APPROVED	DATE	CITY OF CARLSBAD	
			PIPE BEDDING AND TRENCH BACKFILL FOR SEWERS	Robert T. Johnson Jr. 7/10/08 CITY ENGINEER DATE
				SUPPLEMENTAL STANDARD NO. S-5

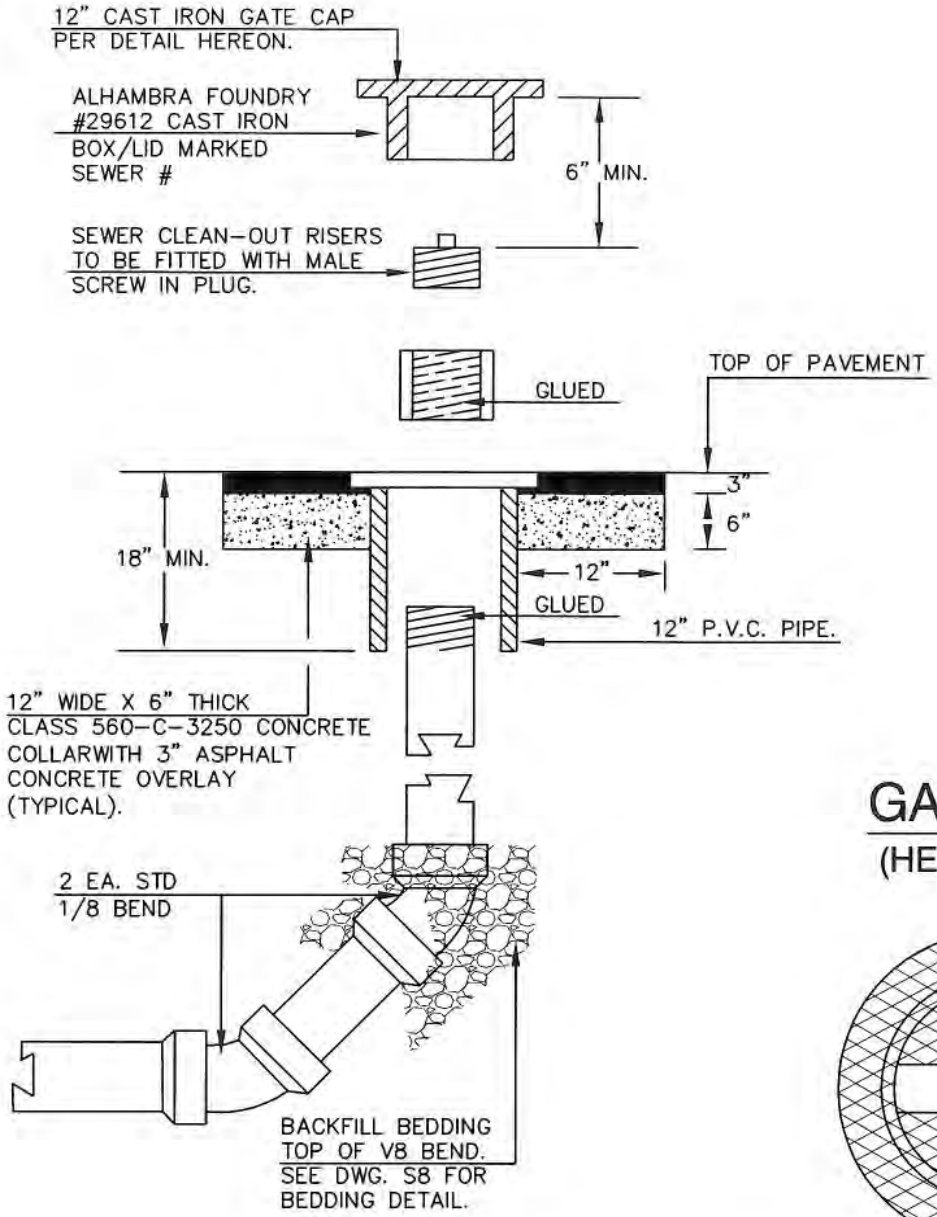

GATE CAP
(HEAVY DUTY)

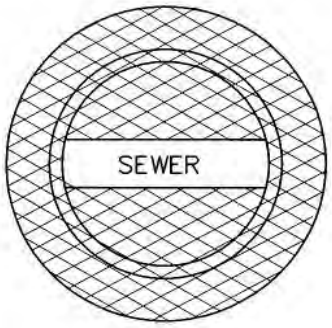

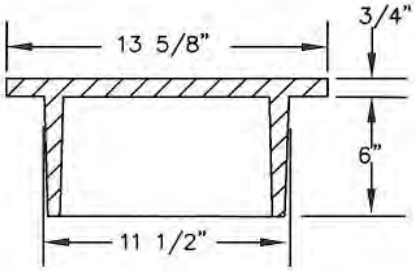

NOTES:

1. GATE CAP SHALL BE LABELED SEWER.
2. CLEANOUTS MAY BE USED WITH P.V.C. SEWER MAIN.
3. RISER SHALL BE SAME DIAMETER AS SEWER MAIN.

REV.	APPROVED	DATE	CITY OF CARLSBAD	
			SEWER MAIN CLEANOUT	Robert T. Johnson Jr. 7/10/08 CITY ENGINEER DATE
				SUPPLEMENTAL STANDARD NO. S-6

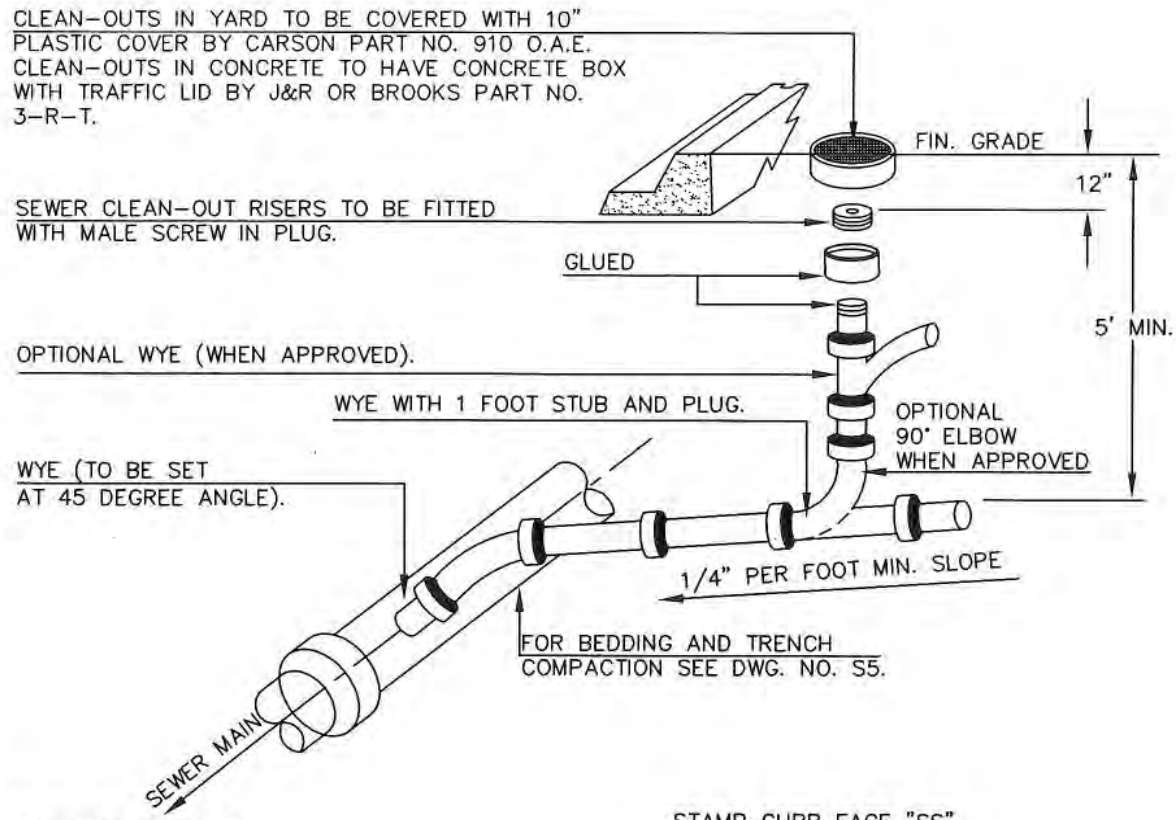

SECTION

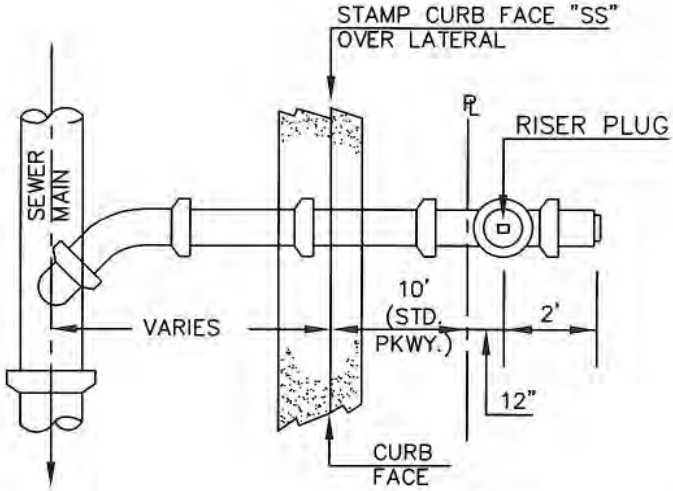

PLAN VIEW

NOTES:

1. THE LATERAL SHALL BE BEDDED THE SAME AS THE MAIN LINE SEWER.
2. IN NO CASE SHALL A LATERAL CONNECT TO THE SEWER MAIN DIRECTLY ON TOP OF THE PIPE.
3. SEWER LATERALS SHALL HAVE A 2% MINIMUM SLOPE.
4. ALL JOINTS ON SEWER LATERAL PIPE SHALL BE COMPRESSION TYPE OR APPROVED SOLVENT WELD.
5. AS-BUILT SEWER LATERAL LOCATIONS SHALL BE FURNISHED TO THE CITY INSPECTOR ON FORMS PROVIDED PRIOR TO FINAL APPROVAL OF WORK.
6. ALL LATERAL TRENCHES TO PROPERTY LINE AND SEWER MAIN TRENCHES TO BE COMPACTED PER S5.
7. CLEAN-OUT TO BE ADJUSTED TO GRADE AFTER FINAL FINISH GRADING.
8. FOR BACKFILL AROUND CLEANOUT RISER SEE DWG. S-5, NOTE 3.
9. MAINTENANCE OF THE SEWER LATERAL FROM THE SEWER MAIN TO THE BUILDING IS THE RESPONSIBILTY OF THE PROERTY OWNER.

REV.	APPROVED	DATE	CITY OF CARLSBAD	Robert T. Johnson Jr. 7/10/08
			SEWER LATERAL (WITH OPTIONAL WYE)	CITY ENGINEER — DATE
				SUPPLEMENTAL STANDARD NO. S-7

ELEVATION

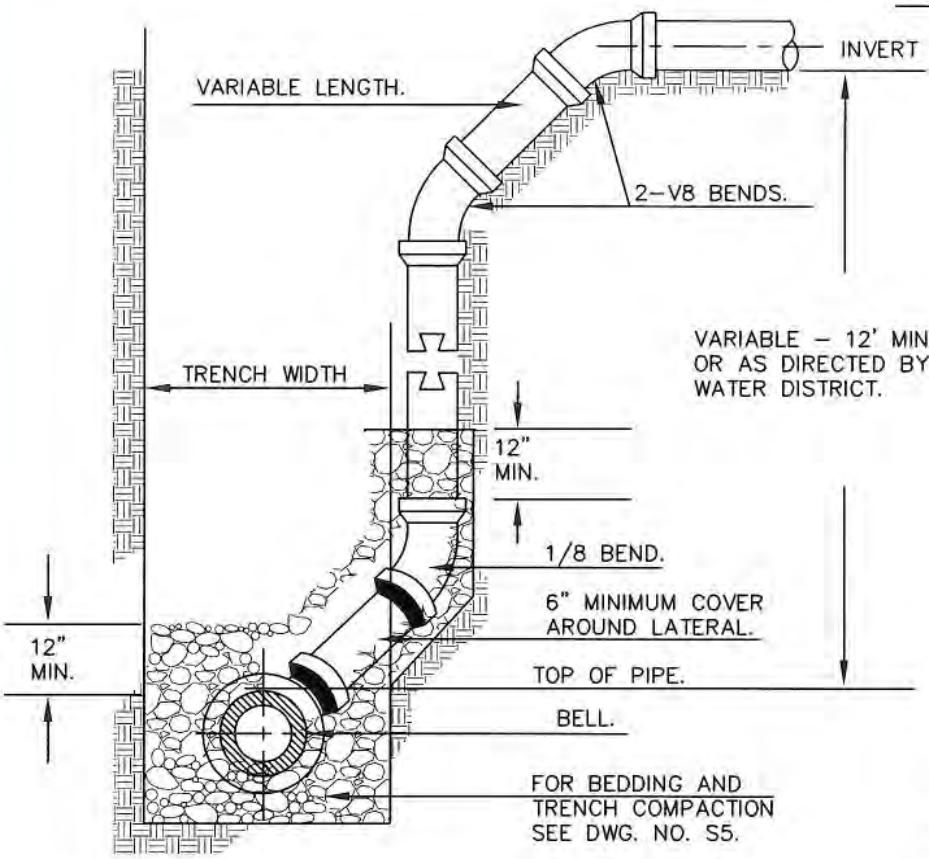

NOTES:

THE VERTICAL PIPE SHALL BE BRACED WHILE TRENCH IS BEING BACKFILLED.

ALL JOINTS ON SEWER LATERAL PIPE SHALL BE COMPRESSION TYPE OR APPROVED SOLVENT WELD.

MAINTENANCE OF SEWER LATERAL FROM MAIN TO BUILDING IS THE RESPONSIBILITY OF THE OWNER.

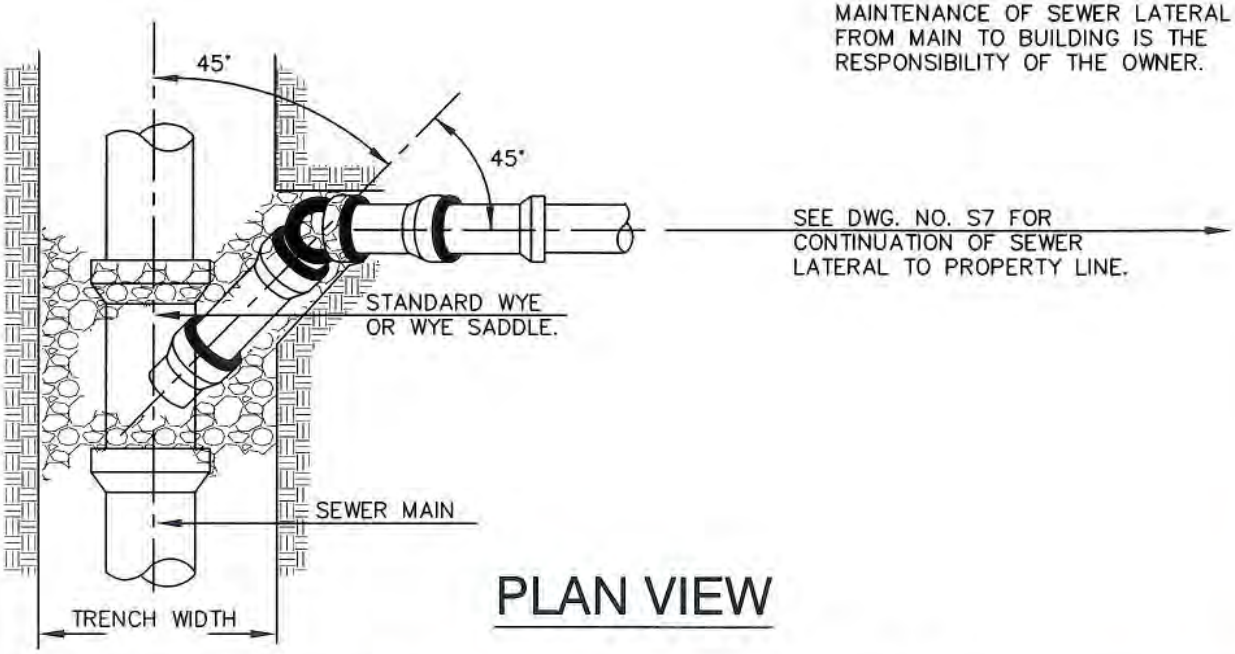

PLAN VIEW

REV.	APPROVED	DATE	CITY OF CARLSBAD	Robert T. Johnson Jr. 7/10/08
			SEWER LATERAL (DEEP CUT HOUSE CONNECTION)	CITY ENGINEER / DATE
				SUPPLEMENTAL STANDARD NO. S-8

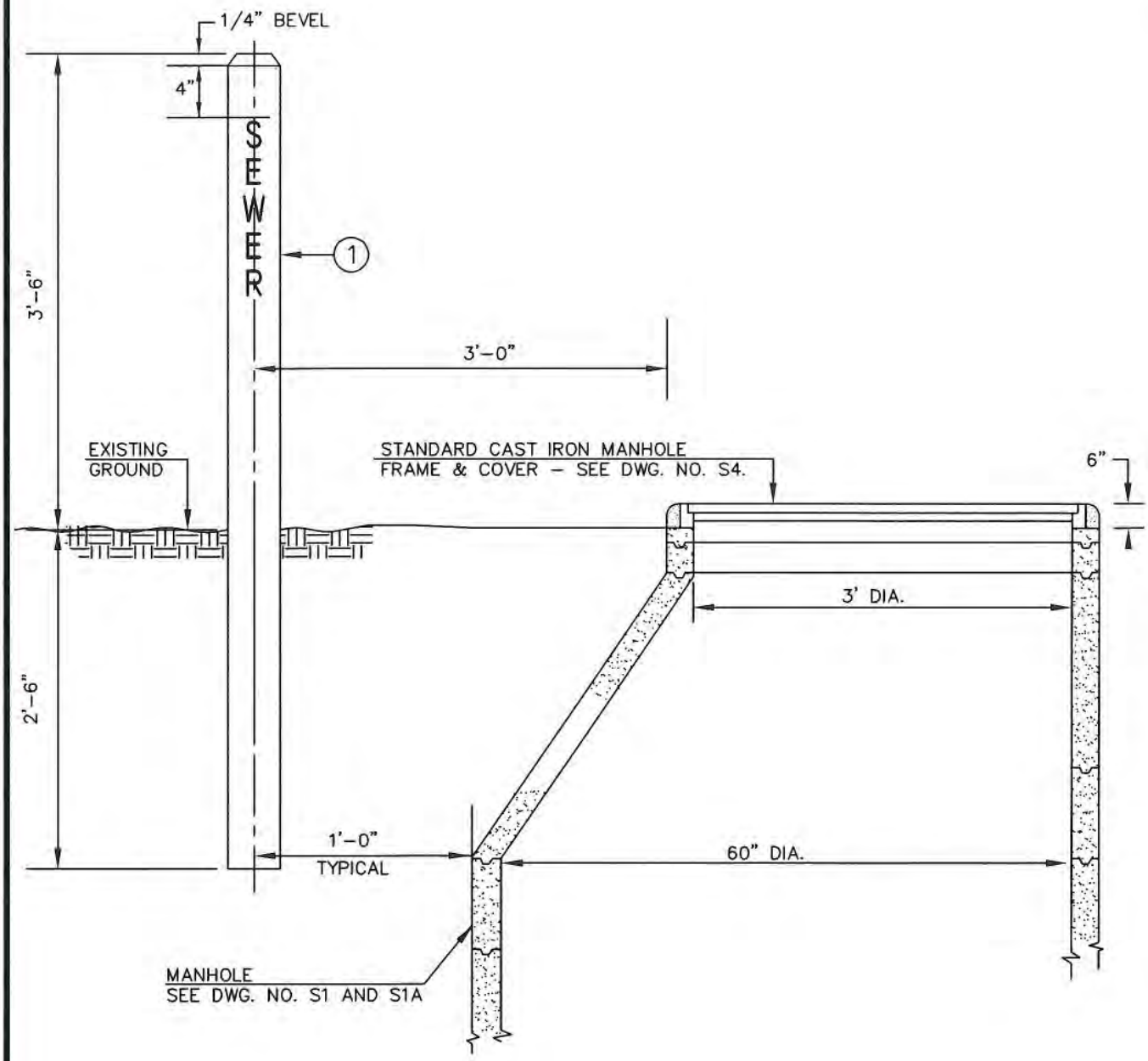

NOT TO SCALE

ITEM	DESCRIPTION	SPEC/DWG
1	4X4" REDWOOD OR PRESSURE TREATED DOUGLAS FIR (S4S).	

REV.	APPROVED	DATE	CITY OF CARLSBAD	
			MANHOLE MARKER POST	Robert T. Johnson Jr. 7/10/08 CITY ENGINEER DATE
				SUPPLEMENTAL STANDARD NO. S-9

VOLUME 3 – STANDARD DRAWINGS & SPECIFICATIONS

CHAPTER 2 - CITY OF CARLSBAD MODIFICATIONS TO THE SAN DIEGO REGIONAL STANDARD DRAWINGS

Note: The minimum allowable concrete mix design for all concrete placed within public right-of-way shall be 560-C-3250 as specified in the Standard Specifications for Public Works Construction.

DWG.	MODIFICATION
D-2	Enlarge curb inlet top to width of sidewalk (not to exceed 5'6") by length of inlet including wings. Existing reinforcing steel shall be extended across enlarged top to clear distances shown.
D-20	Delete.
D-27	Add: A maximum of three (3) combined outlets in lieu of Std. D-25.
D-40	Add: "T" dimension shall be a minimum of three (3) times size of rip rap.
D-70	Minimum bottom width shall be 6' to facilitate cleaning.
D-71	Minimum bottom width shall be 6' to facilitate cleaning.
D-75	Delete "Type-A" Add: 6" x 6" x #10 x #10 welded wire mesh, instead of stucco netting.
E-1	Delete direct burial foundation. Add: The light standard shall be pre-stressed concrete round pole.
E-2	Grounding per note 2. Attachment of the grounding wire to the anchor bolt shall be below the light standard base plate with an approved connection.
G-3	Delete.
G-5	Add: Note 4. Tack coat shall be applied between dike and existing asphalt concrete surface as specified in Section 302-5.4 SSPWC.
G-6	Type B-1 not used. When specified, Type B-2 shall have a curb height of8”, width of 6”, with a 3:1 batter. When specifically approved by the City Engineer, Type B-3 shall have a curb height of 8”, width of 6”, a 3:1 batter with the hinge point eliminated.
G-11	Add: Remove curb/gutter and sidewalk from score-mark to score-mark or from joint-to-joint or approved combination.

CITY OF CARLSBAD MODIFICATIONS
TO THE SAN DIEGO REGIONALSTANDARD DRAWINGS
(CONTINUED)

DWG.	MODIFICATION
G-12	Add: smooth trowel flow line (typical) 7-1/2" thick with a minimum of 6” of aggregate base per City of Carlsbad Standard GS-17.
G-13	Add: smooth trowel flow line (typical), 7-1/2” thick, with a minimum 6” of aggregate base per City of Carlsbad Standard GS-17.
G-14	Change: Residential Thickness = 5-1/2" Commercial/Multi-Family Residential Thickness = 7-1/2"
G-15	Delete requirement 3
G-24	Replaced with Carlsbad Standard Drawing GS-25
G-25	"Type-C" only (delete "Type D")
G-26	Change thickness from 5-1/2" to 7-1/2" and add minimum 4" Class II base under curb/gutter (to 6" past back of curb).
G-33	Delete
G-34	"Type-C" only (delete "Type D")
G-35	"Type-F" only (delete "Type E")
M	General: Agency shall be "City of Carlsbad"
M-2	Add: To be used only with specific approval of the City Engineer.

VOLUME 3 – STANDARD DRAWINGS & SPECIFICATIONS

CHAPTER 3 – STANDARD TITLE SHEETS

GRADING NOTES

(IN ADDITION TO THE REQUIREMENTS OF CHAPTER 15.16 OF THE CARLSBAD MUNICIPAL CODE.)

1. THIS PLAN SUPERSEDES ALL OTHER PLANS PREVIOUSLY APPROVED BY THE CITY OF CARLSBAD REGARDING GRADING SHOWN ON THIS SET OF PLANS.
2. APPROVAL OF THIS PLAN DOES NOT LESSEN OR WAIVE ANY PORTION OF THE CARLSBAD MUNICIPAL CODE, RESOLUTION OF CONDITIONAL APPROVAL, CITY STANDARDS OR OTHER ADDITIONAL DOCUMENTS LISTED HEREON AS THEY MAY PERTAIN TO THIS PROJECT. THE ENGINEER IN RESPONSIBLE CHARGE SHALL REVISE THESE PLANS WHEN NON-CONFORMANCE IS DISCOVERED.
3. CITY APPROVAL OF PLANS DOES NOT RELIEVE THE DEVELOPER OR ENGINEER-OF-WORK FROM RESPONSIBILITY FOR THE CORRECTION OF ERRORS AND OMISSIONS DISCOVERED DURING CONSTRUCTION. ALL PLAN REVISIONS SHALL BE PROMPTLY SUBMITTED TO THE CITY ENGINEER FOR APPROVAL.
4. A RIGHT-OF-WAY PERMIT FROM THE CITY ENGINEER WILL BE REQUIRED FOR ANY WORK IN THE PUBLIC RIGHT OF WAY. PRIOR TO PERMIT ISSUANCE, A CERTIFICATE OF INSURANCE AS WELL AS ADDITIONAL INSURED ENDORSEMENT MUST BE FILED NAMING THE CITY OF CARLSBAD AS AN ADDITIONAL INSURED ON THE PERMITTEE'S POLICY IN THE MINIMUM AMOUNT OF $1,000,000.00 FOR EACH OCCURRANCE OF LIABILITY. THE INSURANCE COMPANY WRITING THE POLICY MUST HAVE A RATING OF "A-" OR BETTER AND A SIZE CATEGORY OF CLASS V OR BETTER AS ESTABLISHED BY "BESTS" KEY RATING GUIDE.
5. UNLESS EXEMPTED BY SECTION 301.(b)5 OF THE UNIFORM BUILDING CODE, RETAINING WALLS OUTSIDE OF PUBLIC RIGHT OF WAY REQUIRE SEPARATE PERMITS FROM THE BUILDING DEPARTMENT.
6. NO WORK SHALL BE COMMENCED UNTIL ALL PERMITS HAVE BEEN OBTAINED FROM THE CITY AND OTHER APPROPRIATE AGENCIES.
7. APPROVAL OF THESE PLANS BY THE CITY ENGINEER DOES NOT AUTHORIZE ANY WORK OR GRADING TO BE PERFORMED UNTIL THE PROPERTY OWNER'S PERMISSION HAS BEEN OBTAINED AND A VALID GRADING PERMIT HAS BEEN ISSUED.
8. NO REVISIONS WILL BE MADE TO THESE PLANS WITHOUT THE WRITTEN APPROVAL OF THE CITY ENGINEER, NOTED WITHIN THE REVISION BLOCK, ON THE APPROPRIATE SHEET OF THE PLANS AND THE TITLE SHEET.
9. ORIGINAL DRAWINGS SHALL BECOME THE PROPERTY OF THE CITY UPON BEING SIGNED BY THE CITY ENGINEER.
10. THE ORIGINAL DRAWING SHALL BE REVISED TO REFLECT AS-BUILT CONDITIONS BY THE ENGINEER-OF-WORK PRIOR TO FINAL ACCEPTANCE OF THE WORK BY THE CITY.
11. ACCESS FOR FIRE AND OTHER EMERGENCY VEHICLES SHALL BE MAINTAINED TO THE PROJECT SITE AT ALL TIMES DURING CONSTRUCTION.
12. WHERE TRENCHES ARE WITHIN CITY EASEMENTS, A SOILS REPORT COMPRISED OF: (A) SUMMARY SHEET, (B) LABORATORY WORK SHEETS AND (C) COMPACTION CURVES, SHALL BE SUBMITTED BY A PROFESSIONAL ENGINEER OF THE STATE OF CALIFORNIA, PRINCIPALLY DOING BUSINESS IN THE FIELD OF APPLIED SOILS MECHANICS. THE SOILS REPORT WILL BE SUBMITTED TO THE CITY ENGINEERING INSPECTOR WITHIN TWO WORKING DAYS OF THE COMPLETION OF FIELD TESTS.
13. A SOILS COMPACTION REPORT AND COMPLIANCE VERIFICATION REGARDING ADHERENCE TO RECOMMENDATIONS OUTLINED IN THE SOILS REPORT IS REQUIRED PRIOR TO THE ISSUANCE OF A BUILDING PERMIT. ALL CONTROLLED GRADING SHALL BE DONE UNDER THE DIRECTION OF A PROFESSIONAL ENGINEER OF THE STATE OF CALIFORNIA PRINCIPALLY DOING BUSINESS IN THE FIELD OF APPLIED SOILS MECHANICS. ALL FILL OR FUTURE FILL AREAS SHALL BE CONSTRUCTED IN ACCORDANCE WITH THE CITY OF CARLSBAD STANDARD SPECIFICATIONS AND THE " EARTHWORK SPECIFICATIONS " ATTACHED TO THE PRELIMINARY SOILS INVESTIGATION. DAILY FIELD COMPACTION REPORTS WILL BE SUBMITTED TO THE PROJECT INSPECTOR.
14. A PRECONSTRUCTION MEETING SHALL BE HELD AT THE SITE PRIOR TO THE BEGINNING OF WORK AND SHALL BE ATTENDED BY ALL REPRESENTATIVES RESPONSIBLE FOR CONSTRUCTION, INSPECTION, SUPERVISION, TESTING AND ALL OTHER ASPECTS OF THE WORK. THE CONTRACTOR SHALL REQUEST A PRECONSTRUCTION MEETING BY CALLING THE INSPECTION LINE AT (760) 438-3891 AT LEAST FIVE(5) WORKING DAYS PRIOR TO STARTING CONSTRUCTION. THE CONTRACTOR WILL THEN BE CONTACTED BY THE PROJECT INSPECTOR TO COORDINATE A DATE AND TIME FOR THE PRECONSTRUCTION MEETING. APPROVED DRAWINGS MUST BE AVAILABLE PRIOR TO SCHEDULING. THE GRADING PERMIT WILL BE PROVIDED BY THE PROJECT INSPECTOR AT THE MEETING.
15. ALL INSPECTION REQUESTS OTHER THAN FOR PRECONSTRUCTION MEETING WILL BE MADE BY CALLING THE ENGINEERING 24-HOUR INSPECTION REQUEST LINE AT (760) 438-3891. INSPECTION REQUEST MUST BE RECEIVED PRIOR TO 2:00 P.M. ON THE DAY BEFORE THE INSPECTION IS NEEDED. INSPECTIONS WILL BE MADE THE NEXT WORK DAY UNLESS YOU REQUEST OTHERWISE. REQUESTS MADE AFTER 2:00 P.M. WILL BE SCHEDULED FOR TWO FULL WORK DAYS LATER.
16. THE OWNER AND/OR APPLICANT THROUGH THE DEVELOPER AND/OR CONTRACTOR SHALL DESIGN, CONSTRUCT AND MAINTAIN ALL SAFETY DEVICES, INCLUDING SHORING, AND SHALL BE SOLELY RESPONSIBLE FOR CONFORMING TO ALL LOCAL, STATE AND FEDERAL SAFETY AND HEALTH STANDARDS, LAWS AND REGULATIONS.
17. THE CONTRACTOR SHALL CONFORM TO LABOR CODE SECTION 6705 BY SUBMITTING A DETAIL PLAN TO THE CITY ENGINEER AND/OR CONCERNED AGENCY SHOWING THE DESIGN OF SHORING, BRACING SLOPING OR OTHER PROVISIONS TO BE MADE OF WORKER PROTECTION FROM THE HAZARD OF CAVING GROUND DURING THE EXCAVATION OF SUCH TRENCH OR TRENCHES OR DURING THE PIPE INSTALLATION THEREIN. THIS PLAN MUST BE PREPARED FOR ALL TRENCHES FIVE FEET (5') OR MORE IN DEPTH AND APPROVED BY THE CITY ENGINEER AND/OR CONCERNED AGENCY PRIOR TO EXCAVATION. IF THE PLAN VARIES FROM THE SHORING SYSTEM STANDARDS ESTABLISHED BY THE CONSTRUCTION SAFETY ORDERS, TITLE 8 CALIFORNIA ADMINISTRATIVE CODE, THE PLAN SHALL BE PREPARED BY A REGISTERED ENGINEER AT THE CONTRACTORS EXPENSE. A COPY OF THE OSHA EXCAVATION PERMIT MUST BE SUBMITTED TO THE INSPECTOR PRIOR TO EXCAVATION.
18. NO BLASTING SHALL BE PERFORMED UNTIL A VALID BLASTING PERMIT HAS BEEN OBTAINED FROM THE CITY OF CARLSBAD. SUBMIT APPLICATION FOR BLASTING PERMIT WELL IN ADVANCE OF THE SCHEDULING OF BLASTING OPERATIONS.
19. IF ANY ARCHAEOLOGICAL RESOURCES ARE DISCOVERED WITHIN ANY WORK AREA DURING CONSTRUCTION, OPERATIONS WILL CEASE IMMEDIATELY, AND THE PERMITTEE WILL NOTIFY THE CITY ENGINEER. OPERATIONS WILL NOT RESTART UNTIL THE PERMITTEE HAS RECEIVED WRITTEN AUTHORITY FROM THE CITY ENGINEER TO DO SO.
20. ALL OPERATIONS CONDUCTED ON THE SITE OR ADJACENT THERETO, INCLUDING WARMING UP, REPAIR, ARRIVAL, DEPARTURE OR OPERATION OF TRUCKS, EARTHMOVING EQUIPMENT, CONSTRUCTION EQUIPMENT AND ANY OTHER ASSOCIATED GRADING EQUIPMENT SHALL BE LIMITED TO THE PERIOD BETWEEN 7:00 A.M. AND SUNSET EACH DAY, MONDAY THRU FRIDAY AND NO EARTHMOVING OR GRADING OPERATIONS SHALL BE CONDUCTED ON WEEKENDS OR HOLIDAYS. (A LIST OF CITY HOLIDAYS IS AVAILABLE AT THE ENGINEERING DEPARTMENT COUNTER.)
21. ALL OFF-SITE HAUL ROUTES SHALL BE SUBMITTED BY THE CONTRACTOR TO THE CITY ENGINEER FOR APPROVAL TWO FULL WORKING DAYS PRIOR TO BEGINNING OF WORK.
22. IMPORT MATERIAL SHALL BE OBTAINED FROM, AND WASTE MATERIAL SHALL BE DEPOSITED AT, A SITE APPROVED BY THE CITY ENGINEER. THE CONTRACTOR SHALL BE RESPONSIBLE FOR ANY DEBRIS OR DAMAGE OCCURRING ALONG THE HAUL ROUTES OR ADJACENT STREETS AS A RESULT OF THE GRADING OPERATION.
23. BRUSH SHALL BE REMOVED ONLY WITHIN THE AREA TO BE GRADED. NO TREES ARE TO BE REMOVED UNLESS SPECIFICALLY NOTED ON THE PLAN.
24. ALL AREAS SHALL BE GRADED TO DRAIN. GRADING RESULTING IN THE PONDING OF WATER IS NOT PERMITTED. ALL EARTHEN SWALES AND DITCHES SHALL HAVE A MINIMUM ONE PERCENT SLOPE.
25. THESE PLANS ARE SUBJECT TO A SIGNED AND APPROVED SET OF EROSION CONTROL PLANS. EROSION CONTROL SHALL BE AS SHOWN AND AS APPROVED BY THE CITY ENGINEER OR AS DIRECTED BY THE PROJECT INSPECTOR.
26. ALL SLOPES SHALL BE TRIMMED TO A FINISH GRADE TO PRODUCE A UNIFORM SURFACE AND CROSS SECTION. THE SITE SHALL BE LEFT IN A NEAT AND ORDERLY CONDITION. ALL STONES, ROOTS OR OTHER DEBRIS SHALL BE REMOVED AND DISPOSED OF AT A SITE APPROVED OF BY THE CITY ENGINEER.
27. ALL SLOPES SHALL BE IRRIGATED, STABILIZED, PLANTED AND/OR HYDROSEEDED WITHIN TEN (10) DAYS OF THE TIME WHEN EACH SLOPE IS BROUGHT TO GRADE AS SHOWN ON THE APPROVED GRADING PLANS.
28. LANDSCAPING SHALL BE ACCOMPLISHED ON ALL SLOPES AND PADS AS REQUIRED BY THE CITY OF CARLSBAD LANDSCAPE MANUAL, THE LANDSCAPING PLANS FOR THIS PROJECT, DRAWING NO._____, AND/OR AS DIRECTED BY THE CITY ENGINEER OR PLANNING DIRECTOR.
29. THE OWNER/APPLICANT SHALL INSURE THAT ALL CONTRACTORS SHALL COORDINATE THE WORK OF THESE GRADING PLANS WITH THAT SHOWN ON BOTH THE LANDSCAPE AND IRRIGATION PLANS AND THE IMPROVEMENT PLANS AS REQUIRED FOR THIS WORK IN ACCORDANCE WITH THE LANDSCAPE MANUAL TIME REQUIREMENTS.
30. WHERE AN EXISTING PIPE LINE IS TO BE ABANDONED AS A RESULT OF THE GRADING OPERATION, IT SHALL BE REMOVED WITHIN TWENTY FEET OF BUILDING OR STREET AREAS AND REPLACED WITH PROPERLY COMPACTED SOILS. IN OTHER AREAS THE PIPE WILL BE PLUGGED WITH CONCRETE OR REMOVED AS APPROVED BY THE CITY ENGINEER.
31. THE CONTRACTOR SHALL VERIFY THE LOCATION OF ALL EXISTING FACILITIES (ABOVE GROUND AND UNDER GROUND) WITHIN THE PROJECT SITE SUFFICIENTLY AHEAD OF GRADING TO PERMIT THE REVISION OF THE GRADING PLANS IF IT IS FOUND THAT THE ACTUAL LOCATIONS ARE IN CONFLICT WITH THE PROPOSED WORK.
32. THE CONTRACTOR SHALL NOTIFY AFFECTED UTILITY COMPANIES (SEE BELOW) AT LEAST 2 FULL WORKING DAYS PRIOR TO STARTING GRADING NEAR THEIR FACILITIES AND SHALL COORDINATE THE WORK WITH A COMPANY REPRESENTATIVE.

UNDERGROUND SERVICE ALERT	(800)422-4133
SDG&E	(800)660-7343
PACIFIC BELL	(800)892-0123
TIME WARNER CABLE	(760)438-7741
COX COMMUNICATIONS	(760)806-9809
CITY OF CARLSBAD(STREETS & STORM DRAIN)	(760)434-2980
*CITY OF CARLSBAD(SEWER,WATER & RECLAIMED WATER)	(760)438-2722
*SAN DIEGUITO WATER DISTRICT	(760)633-2650
*LEUCADIA WASTEWATER DISTRICT	(760)753-0155
*VALLECITOS WATER DISTRICT	(760)744-0460
*OLIVENHAIN WATER DISTRICT	(760)753-6466
*BUENA SANITATION DISTRICT	(760)726-1340

*AS APPROPRIATE

33. PERMIT COMPLIANCE REQUIREMENTS:
    A. FOR CONTROLLED GRADING - THE APPLICANT HIRES A CIVIL ENGINEER, SOILS ENGINEER, AND/OR GEOLOGIST TO GIVE TECHNICAL ADVICE, OBSERVE AND CONTROL THE WORK IN PROGRESS {15.16.120 A.8} CARLSBAD MUNICIPAL CODE.
    B. PRIOR TO FINAL APPROVAL OF A GRADING PERMIT - THE FOLLOWING REPORTS MUST BE SUBMITTED TO THE CITY ENGINEER VIA THE PROJECT INSPECTOR {15.16.120 A.10} CARLSBAD MUNICIPAL CODE:
        (1) FINAL REPORT BY SUPERVISING GRADING ENGINEER STATING ALL GRADING IS COMPLETE. ALL EROSION CONTROL, SLOPE PLANTING AND IRRIGATION ARE INSTALLED IN CONFORMANCE WITH CITY CODE AND THE APPROVED PLANS (OBTAIN SAMPLE OF COMPLIANCE LETTER FROM CITY ENGINEERING DEPARTMENT).
        (2) AS-BUILT GRADING PLAN.
        (3) REPORT FROM THE SOILS ENGINEER, WHICH INCLUDES RECOMMENDED SOIL BEARING CAPACITIES, A STATEMENT AS TO THE EXPANSIVE QUALITY OF THE SOIL, AND SUMMARIES OF FIELD AND LABORATORY TESTS. THE REPORT SHALL ALSO INCLUDE A STATEMENT BY THE SOILS ENGINEER THAT THE GRADING WAS DONE IN ACCORDANCE WITH THE REQUIREMENTS AND RECOMMENDATIONS OUTLINED IN THE PRELIMINARY SOILS REPORT AND ANY SUPPLEMENTS THERETO.
        (4) REPORT WITH AS-BUILT GEOLOGIC PLAN, IF REQUIRED BY THE CITY.
34. UNLESS A GRADING PERMIT FOR THIS PROJECT IS ISSUED WITHIN ONE (1) YEAR AFTER THE CITY ENGINEER'S APPROVAL, THESE PLANS MAY BE REQUIRED TO BE RESUBMITTED FOR PLANCHECK. PLANCHECK FEES WILL BE REQUIRED FOR ANY SUCH RECHECK.
35. THE SOILS REPORT TITLED_____, PREPARED BY_____, DATED _____,20____, SHALL BE CONSIDERED AS A PART OF THIS GRADING PLAN. ALL GRADING SHALL BE DONE IN ACCORDANCE WITH THE RECOMMENDATIONS AND SPECIFICATIONS CONTAINED IN SAID SOILS REPORT.

"DECLARATION OF RESPONSIBLE CHARGE"

I HEREBY DECLARE THAT I AM THE ENGINEER OF WORK FOR THIS PROJECT, THAT I HAVE EXERCISED RESPONSIBLE CHARGE OVER THE DESIGN OF THE PROJECT AS DEFINED IN SECTION 6703 OF THE BUSINESS AND PROFESSIONS CODE, AND THAT THE DESIGN IS CONSISTENT WITH CURRENT STANDARDS.

I UNDERSTAND THAT THE CHECK OF PROJECT DRAWINGS AND SPECIFICATIONS BY THE CITY OF CARLSBAD DOES NOT RELIEVE ME, AS ENGINEER OF WORK, OF MY RESPONSIBILITIES FOR PROJECT DESIGN.

FIRM: _____

ADDRESS: _____

CITY, STATE: _____

TELEPHONE: _____

BY: _____ DATE: _____
(NAME OF ENGINEER)

R.C.E. NO.: _____

REGISTRATION EXPIRATION DATE: _____

SOILS ENGINEER'S CERTIFICATE

I, _____, A REGISTERED (CIVIL/GEOTECHNICAL) ENGINEER OF THE STATE OF CALIFORNIA, PRINCIPALLY DOING BUSINESS IN THE FIELD OF APPLIED SOILS MECHANICS, HEREBY CERTIFY THAT A SAMPLING AND STUDY OF THE SOIL CONDITIONS PREVALENT WITHIN THIS SITE WAS MADE BY ME OR UNDER MY DIRECTION BETWEEN THE DATES OF _____, 20_____AND _____, 20____. TWO COPIES OF THE SOILS REPORT COMPILED FROM THIS STUDY, WITH MY RECOMMENDATIONS, HAS BEEN SUBMITTED TO THE OFFICE OF THE CITY ENGINEER.

SIGNED: _____

G.E./P.E. NO.: _____

DATE: _____

LICENSE EXPIRATION DATE: _____

OWNER'S CERTIFICATE

I (WE) HEREBY CERTIFY THAT A REGISTERED SOILS ENGINEER OR GEOLOGIST HAS BEEN OR WILL BE RETAINED TO SUPERVISE OVER-ALL GRADING ACTIVITY AND ADVISE ON THE COMPACTION AND STABILITY OF THIS SITE.

_____
(PRINT NAME BELOW LINE) DATE

SOURCE OF TOPOGRAPHY

TOPOGRAPHY SHOWN ON THESE PLANS WAS GENERATED BY_____ _____ METHODS FROM INFORMATION GATHERED ON_____, 20____ BY_____. TOPOGRAPHY SHOWN HEREON CONFORMS TO NATIONAL MAP ACCURACY STANDARDS.

PROJECT LOCATION

THIS PROJECT IS LOCATED WITHIN ASSESSORS PARCEL NUMBER(S)

_____

THE CALIFORNIA COORDINATE INDEX OF THIS PROJECT IS:
N_____ E_____.

EROSION CONTROL NOTES

1. IN CASE EMERGENCY WORK IS REQUIRED, CONTACT _____AT _____ (PHONE NUMBER)
2. EQUIPMENT AND WORKERS FOR EMERGENCY WORK SHALL BE MADE AVAILABLE AT ALL TIMES DURING THE RAINY SEASON. ALL NECESSARY MATERIALS SHALL BE STOCKPILED ON SITE AT CONVENIENT LOCATIONS TO FACILITATE RAPID CONSTRUCTION OF TEMPORARY DEVICES WHEN RAIN IS EMINENT.
3. DEVICES SHOWN ON PLANS SHALL NOT BE MOVED OR MODIFIED WITHOUT THE APPROVAL OF THE ENGINEERING INSPECTOR.
4. THE CONTRACTOR SHALL RESTORE ALL EROSION CONTROL DEVICES TO WORKING ORDER TO THE SATISFACTION OF THE CITY ENGINEER AFTER EACH RUN-OFF PRODUCING RAINFALL.
5. THE CONTRACTOR SHALL INSTALL ADDITIONAL EROSION CONTROL MEASURES AS MAY BE REQUIRED BY THE CITY ENGINEER DUE TO UNCOMPLETED GRADING OPERATIONS OR UNFORESEEN CIRCUMSTANCES WHICH MAY ARISE.
6. THE CONTRACTOR SHALL BE RESPONSIBLE AND SHALL TAKE NECESSARY PRECAUTIONS TO PREVENT PUBLIC TRESPASS ONTO AREAS WHERE IMPOUNDED WATERS CREATE A HAZARDOUS CONDITION.
7. ALL EROSION CONTROL MEASURES PROVIDED PER THE APPROVED GRADING PLAN SHALL BE INCORPORATED HEREON.
8. GRADED AREAS AROUND THE PROJECT PERIMETER MUST DRAIN AWAY FROM THE FACE OF SLOPE AT THE CONCLUSION OF EACH WORKING DAY.
9. ALL REMOVABLE PROTECTIVE DEVICES SHOWN SHALL BE IN PLACE AT THE END OF EACH WORKING DAY WHEN THE FIVE (5) DAY RAIN PROBABILITY FORECAST EXCEEDS FORTY PERCENT (40%). SILT AND OTHER DEBRIS SHALL BE REMOVED AFTER EACH RAINFALL.
10. ALL GRAVEL BAGS SHALL BE BURLAP TYPE WITH 3/4 INCH MINIMUM AGGREGRATE.
11. SHOULD GERMINATION OF HYDROSEEDED SLOPES FAIL TO PROVIDE EFFECTIVE COVERAGE OF GRADED SLOPES (90% COVERAGE) PRIOR TO NOVEMBER 15, THE SLOPES SHALL BE STABILIZED BY PUNCH STRAW INSTALLED IN ACCORDANCE WITH SECTION 35.023 OF THE EROSION AND SEDIMENT CONTROL HANDBOOK OF THE DEPARTMENT OF CONSERVATION, STATE OF CALIFORNIA.

TEMPORARY EROSION CONTROL PLANTING AND IRRIGATION

ALL PERMANENT AND TEMPORARY EROSION CONTROL PLANTING AND IRRIGATION SHALL BE INSTALLED AND MAINTAINED AS REQUIRED IN SECTION 212 OF THE STANDARD SPECIFICATIONS AND THE FOLLOWING:

A. HYDROSEEDING SHALL BE APPLIED TO:
   1. ALL SLOPES THAT ARE GRADED 6:1 (HORIZONTAL TO VERTICAL) OR STEEPER WHEN THEY ARE:
      a. THREE FEET OR MORE IN HEIGHT AND ADJACENT TO A PUBLIC WALL OR STREET.
      b. ALL SLOPES 4 FEET OR MORE IN HEIGHT.
   2. AREAS GRADED FLATTER THAN 6:1 WHEN ANY OF THE FOLLOWING CONDITIONS EXIST:
      a. NOT SCHEDULED FOR IMPROVEMENTS(CONSTRUCTION OR GENERAL LANDSCAPING) WITHIN 60 DAYS OF ROUGH GRADING.
      b. IDENTIFIED BY THE PARKS AND RECREATION DIRECTOR AS HIGHLY VISIBLE TO THE PUBLIC.
      c. HAVE ANY SPECIAL CONDITION IDENTIFIED BY THE CITY ENGINEER THAT WARRANTS IMMEDIATE TREATMENT.

B. HYDROSEEDED AREAS SHALL BE IRRIGATED IN ACCORDANCE WITH THE FOLLOWING CRITERIA:
   1. ALL SLOPES THAT ARE GRADED 6:1 OR STEEPER AND THAT ARE:
      a. THREE TO EIGHT FEET IN HEIGHT SHALL BE IRRIGATED BY HAND WATERING FROM QUICK COUPLERS/HOSE BIBS OR A CONVENTIONAL SYSTEM OF LOW PRECIPITATION SPRINKLER HEADS PROVIDING 100% COVERAGE.
      b. GREATER THAN 8 FEET IN HEIGHT SHALL BE WATERED BY A CONVENTIONAL SYSTEM OF LOW PRECIPITATION SPRINKLER HEADS PROVIDING 100% COVERAGE.
   2. AREAS SLOPED LESS THAN 6:1 SHALL BE IRRIGATED AS APPROVED BY THE CITY ENGINEER, PRIOR TO HYDROSEEDING. THE DEVELOPER SHALL SUBMIT A PROPOSED SCHEME TO PROVIDE IRRIGATION TO THE CITY ENGINEER. THE PROPOSAL SHALL BE SPECIFIC REGARDING THE NUMBERS, TYPES AND COSTS OF THE ELEMENTS OF THE THE PROPOSED SYSTEM.
   3. IRRIGATION SHALL MAINTAIN THE MOISTURE LEVEL OF THE SOIL AT THE OPTIMUM LEVEL FOR THE GROWTH OF THE HYDROSEEDED GROWTH.

C. HYDROSEEDING MIX SHALL CONSIST OF ALL OF THE FOLLOWING:
   1. SEED MIX SHALL CONSIST OF NO LESS THAN:
      a. 20 lbs. PER ACRE OF ROSE CLOVER
      b. 20 lbs. PER ACRE OF ZORRO FESCUE
      c. 3 lbs. PER ACRE OF E SCHOOL CIA CALIFORNICA
      d. 4 lbs. PER ACRE OF ACHILLEA MILLEFOLIA
      e. 3 lbs. PER ACRE OF ALYSSUM (CARPET OF SNOW)
      f. 1/2 lb. PER ACRE OF DIMORPHOLECA
      g. ITEMS c,d,e, AND f OF THIS SUBSECTION MAY BE OMITTED ON LOCATIONS WHERE THE AREA BEING HYDROSEEDED IS NOT VISIBLE FROM EITHER A PUBLIC STREET OR RESIDENTIAL STRUCTURES.
      h. ITEM a OF THIS SUBSECTION MUST BE INOCULATED WITH A NITROGEN FIXING BACTERIA AND APPLIED DRY EITHER BY DRILLING OR BROADCASTING BEFORE HYDROSEEDING.
      i. ALL SEED MATERIALS SHALL BE TRANSPORTED TO THE JOBSITE IN UNOPENED CONTAINERS WITH THE CALIFORNIA DEPARTMENT OF FOOD AND AGRICULTURE CERTIFICATION TAG ATTACHED TO, OR PRINTED ON SAID CONTAINERS.
      j. NON-PHYTO-TOXIC WETTING AGENTS MAY BE ADDED TO THE HYDROSEED SLURRY AT THE DISCRETION OF THE CONTRACTOR.
   2. TYPE 1 MULCH APPLIED AT THE RATE OF NO LESS THAN 2000 lbs PER ACRE. TYPE 6 MULCH (STRAW) MAY BE SUBSTITUTED, ALL OR PART, FOR HYDRAULICALLY APPLIED FIBER MATERIAL. WHEN STRAW IS USED IT MUST BE ANCHORED TO THE SLOPE BY MECHANICALLY PUNCHING NO LESS THAN 50% OF THE STRAW INTO THE SOIL.
   3. FERTILIZER CONSISTING OF AMMONIUM PHOSPHATE SULFATE, 16-20-0, WITH 15% SULPHUR APPLIED AT THE RATE OF 500 lbs. PER ACRE.

D. AREAS TO BE HYDROSEEDED SHALL BE PREPARED PRIOR TO HYDROSEEDING BY:
   1. ROUGHENING THE SURFACE TO BE PLANTED BY ANY OR A COMBINATION OF:
      a. TRACK WALKING SLOPES STEEPER THAN 6:1
      b. HARROWING AREAS 6:1 OR FLATTER THAT ARE SUFFICIENTLY FRIABLE.
      c. RIPPING AREAS THAT WILL NOT BREAK UP USING ITEMS a OR b ABOVE.
   2. CONDITIONING THE SOILS SO THAT IT IS SUITABLE FOR PLANTING BY:
      a. ADJUSTING THE SURFACE SOIL MOISTURE TO PROVIDE A DAMP BUT NOT SATURATED SEED BED.
      b. THE ADDITION OF SOIL AMENDMENTS, PH ADJUSTMENT, LEACHING COVERING SALINE SOILS TO PROVIDED VIABLE CONDITIONS FOR GROWTH.

E. HYDROSEEDED AREAS SHALL BE MAINTAINED TO PROVIDE A VIGOROUS GROWTH UNTIL THE THE PROJECT IS PERMANENTLY LANDSCAPED OR, FOR AREAS WHERE HYDROSEEDING IS THE THE PERMANENT LANDSCAPING, UNTIL THE PROJECT IS COMPLETED AND ALL BONDS RELEASED.

VICINITY MAP

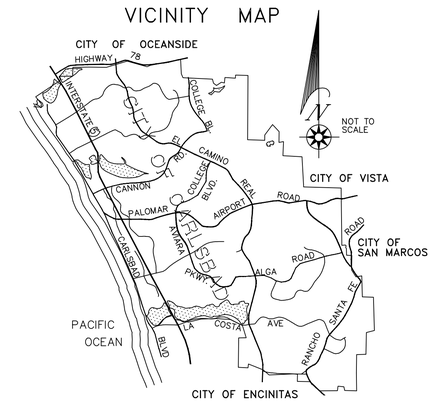

WORK TO BE DONE

THE GRADING WORK SHALL CONSIST OF THE CONSTRUCTION OF ALL CUTS AND FILLS, REMEDIAL GRADING, DRAINAGE FACILITIES, EROSION CONTROL FACILITIES, AND PLANTING OF PERMANENT LANDSCAPING AND PREPARATION OF AS-BUILT GRADING PLANS, AS-BUILT GEOLOGIC MAPS AND REPORTS, ALL AS SHOWN OR REQUIRED ON THIS SET OF PLANS AND THE CITY STANDARDS, SPECIFICATIONS, REQUIREMENTS, RESOLUTIONS AND ORDINANCES CITED ON THESE PLANS.

THE GRADING WORK SHALL BE PERFORMED IN ACCORDANCE WITH THE FOLLOWING DOCUMENTS, CURRENT AT THE TIME OF CONSTRUCTION, AS DIRECTED BY THE CITY ENGINEER.

1. CARLSBAD MUNICIPAL CODE
2. CITY OF CARLSBAD ENGINEERING STANDARDS
3. THIS SET OF PLANS
4. RESOLUTION NO._____ DATED_____
5. THE STANDARD SPECIFICATIONS FOR PUBLIC WORKS CONSTRUCTION (GREEN BOOK).
6. SOILS REPORT AND RECOMMENDATIONS BY_____ _____ DATED _____
7. THE SAN DIEGO REGIONAL STANDARD DRAWINGS AND AS MAY BE MODIFIED BY THE CITY OF CARLSBAD STANDARDS.
8. CALIFORNIA COASTAL COMMISSION DEVELOPMENT PERMIT CONDITIONS DATED _____
9. ENVIRONMENTAL APPROVAL DOCUMENTS DATED _____
10. STORM WATER POLLUTION PREVENTION PLAN PREPARED BY _____ DATED _____ WDID NO. 9 375 _____
11. STORM WATER MANAGEMENT PLAN PREPARED BY_____ DATED _____
12. CALIFORNIA STORM WATER QUALITY ASSOCIATION BMP CONSTRUCTION HANDBOOK AND CALTRANS CONSTRUCTION SITE BMP MANUAL.

LEGEND

DESCRIPTION	DWG.NO.	SYMBOL	QUANTITY

BENCH MARK

DESCRIPTION: _____
LOCATION: _____

RECORDED: _____
ELEVATION: _____ DATUM: _____

REFERENCE DRAWINGS

REQUIRED TREATMENT CONTROL BMP TABLE

TYPE	DESCRIPTION	OWNERSHIP	MAINTENANCE AGREEMENT	SHEET NO.	MAINTENANCE FREQUENCY

SUSMP PROJECT PRIORITY _____

EARTHWORK QUANTITIES

CUT: _____CY
FILL: _____CY
IMPORT: _____CY
EXPORT: _____CY
REMEDIAL: _____CY

PLANNING DEPARTMENT APPROVAL

_____ DATE: / /
(SIGNED) PLANNING DIRECTOR

_____ DATE: / /
(SIGNED)
RECOMMENDED BY: _____
(PRINT NAME)

"AS BUILT"

_____ _____
RCE _____ EXP._____ DATE

REVIEWED BY:

_____ _____
INSPECTOR DATE

CARLSBAD MUNICIPAL WATER DISTRICT

_____ _____
DAVID A. HAUSER DATE
DEPUTY CITY ENGINEER R.C.E. 33081 EXP. 6/30/08

DATE	INITIAL	REVISION DESCRIPTION	DATE	INITIAL	DATE	INITIAL
ENGINEER OF WORK			OTHER APPROVAL		CITY APPROVAL	

SHEET | CITY OF CARLSBAD ENGINEERING DEPARTMENT | SHEETS

GRADING AND EROSION CONTROL PLANS FOR:

TITLE SHEET

APPROVED: GLEN K. VAN PESKI

_____ _____
SENIOR CIVIL ENGINEER PE 41204 EXPIRES 3/31/11 DATE

DWN BY: _____
CHKD BY: _____
RVWD BY: _____

PROJECT NO. | DRAWING NO.

C:\DRAWING FILES\TITLE SHEETS\CLSB-GP.DWG REVISED: 08/09/07

GENERAL NOTES

1. THIS PLAN SUPERSEDES ALL OTHER PLANS PREVIOUSLY APPROVED BY THE CITY OF CARLSBAD REGARDING IMPROVEMENTS SHOWN ON THIS SET OF PLANS.
2. APPROVAL OF THIS PLAN DOES NOT LESSEN OR WAIVE ANY PORTION OF THE CARLSBAD MUNICIPAL CODE, RESOLUTION OF CONDITIONAL APPROVAL, CITY STANDARDS OR OTHER ADDITIONAL DOCUMENTS LISTED HEREON AS THEY MAY PERTAIN TO THIS PROJECT. THE ENGINEER IN RESPONSIBLE CHARGE SHALL REVISE THESE PLANS WHEN NON-CONFORMANCE IS DISCOVERED.
3. CITY APPROVAL OF PLANS DOES NOT RELIEVE THE DEVELOPER OR ENGINEER-OF-WORK FROM RESPONSIBILITY FOR THE CORRECTION OF ERRORS AND OMISSIONS DISCOVERED DURING CONSTRUCTION. ALL PLAN REVISIONS SHALL BE PROMPTLY SUBMITTED TO THE CITY ENGINEER FOR APPROVAL.
4. A RIGHT-OF-WAY PERMIT FROM THE CITY ENGINEER WILL BE REQUIRED FOR ANY WORK IN THE PUBLIC RIGHT OF WAY. PRIOR TO PERMIT ISSUANCE, A CERTIFICATE OF INSURANCE MUST BE FILED NAMING THE CITY OF CARLSBAD AS AN ADDITIONAL INSURED ON THE PERMITTEE'S POLICY IN THE MINIMUM AMOUNT OF $1,000,000.00 FOR EACH OCCURRENCE OF LIABILITY. THE INSURANCE COMPANY WRITING THE POLICY MUST HAVE A RATING OF "A-" OR BETTER AND A SIZE CATEGORY OF CLASS V OR BETTER AS ESTABLISHED BY "BESTS" KEY RATING GUIDE.
5. NO WORK SHALL BE COMMENCED UNTIL ALL PERMITS HAVE BEEN OBTAINED FROM THE CITY AND OTHER APPROPRIATE AGENCIES.
6. REVISION OF THESE PLANS MAY BE REQUIRED IF THE PROPOSED IMPROVEMENTS ARE NOT CONSTRUCTED PRIOR TO THE DEADLINE DATE OF THE IMPROVEMENT AGREEMENT.
7. NO REVISIONS WILL BE MADE TO THESE PLANS WITHOUT THE WRITTEN APPROVAL OF THE CITY ENGINEER, NOTED WITHIN THE REVISION BLOCK, ON THE APPROPRIATE SHEET OF THE PLANS AND TITLE SHEET.
8. ORIGINAL DRAWINGS SHALL BECOME THE PROPERTY OF THE CITY UPON BEING SIGNED BY THE CITY ENGINEER.
9. THE ORIGINAL DRAWING SHALL BE REVISED TO REFLECT AS-BUILT CONDITIONS BY THE ENGINEER-OF-WORK PRIOR TO FINAL ACCEPTANCE OF THE WORK BY THE CITY.
10. ACCESS FOR FIRE AND OTHER EMERGENCY VEHICLES SHALL BE MAINTAINED TO THE PROJECT SITE AT ALL TIMES DURING CONSTRUCTION.
11. WHERE TRENCHES ARE WITHIN CITY EASEMENTS, A SOILS REPORT COMPRISED OF: (A) SUMMARY SHEET, (B) LABORATORY WORK SHEETS AND (C) COMPACTION CURVES, SHALL BE SUBMITTED BY A PROFESSIONAL ENGINEER OF THE STATE OF CALIFORNIA, PRINCIPALLY DOING BUSINESS IN THE FIELD OF APPLIED SOILS MECHANICS. THE SOILS REPORT WILL BE SUBMITTED TO THE CITY ENGINEERING INSPECTOR WITHIN TWO WORKING DAYS OF COMPLETION OF FIELD TESTS. THE WRITTEN FIELD COMPACTION REPORT(S) SHALL BE IMMEDIATELY SUBMITTED TO THE CITY ENGINEERING INSPECTOR UPON COMPLETION OF THE FIELD TESTS.
12. A PRECONSTRUCTION MEETING SHALL BE HELD AT THE SITE PRIOR TO THE BEGINNING OF WORK AND SHALL BE ATTENDED BY ALL REPRESENTATIVES RESPONSIBLE FOR CONSTRUCTION, INSPECTION, SUPERVISION, TESTING AND ALL OTHER ASPECTS OF THE WORK. THE CONTRACTOR SHALL SCHEDULE THE MEETING BY CALLING THE INSPECTION LINE AT (760) 438-3891 AT LEAST FIVE (5) WORKING DAYS PRIOR TO STARTING CONSTRUCTION. APPROVED DRAWINGS MUST BE AVAILABLE PRIOR TO SCHEDULING.
13. ALL INSPECTION REQUESTS OTHER THAN FOR PRECONSTRUCTION MEETING WILL BE MADE BY CALLING THE ENGINEERING 24-HOUR INSPECTION REQUEST LINE AT (760) 438-3891. INSPECTION REQUESTS MUST BE RECEIVED PRIOR TO 2:00 P.M. ON THE DAY BEFORE THE INSPECTION IS NEEDED. INSPECTIONS WILL BE MADE THE NEXT WORK DAY UNLESS YOU REQUEST OTHERWISE. REQUESTS MADE AFTER 2:00 P.M. WILL BE SCHEDULED FOR TWO FULL WORK DAYS LATER.
14. THE OWNER AND/OR APPLICANT THROUGH THE DEVELOPER AND/OR CONTRACTOR SHALL DESIGN, CONSTRUCT AND MAINTAIN ALL SAFETY DEVICES, INCLUDING SHORING, AND SHALL BE SOLELY RESPONSIBLE FOR CONFORMING TO ALL LOCAL, STATE AND FEDERAL SAFETY AND HEALTH STANDARDS, LAWS AND REGULATIONS.
15. THE CONTRACTOR SHALL CONFORM TO LABOR CODE SECTION 6705 BY SUBMITTING A DETAIL PLAN TO THE CITY ENGINEER AND/OR CONCERNED AGENCY SHOWING THE DESIGN OF SHORING, BRACING SLOPE OR OTHER PROVISIONS TO BE MADE OF WORKER PROTECTION FROM THE HAZARD OF CAVING GROUND DURING THE EXCAVATION OF SUCH TRENCH OR TRENCHES OR DURING THE PIPE INSTALLATION THEREIN. THIS PLAN MUST BE PREPARED FOR ALL TRENCHES FIVE FEET (5') OR MORE IN DEPTH AND APPROVED BY THE CITY ENGINEER AND/OR CONCERNED AGENCY PRIOR TO EXCAVATION. IF THE PLAN VARIES FROM THE SHORING SYSTEM STANDARDS ESTABLISHED BY THE CONSTRUCTION SAFETY ORDERS, TITLE 8 CALIFORNIA ADMINISTRATIVE CODE, THE PLAN SHALL BE PREPARED BY A REGISTERED ENGINEER AT THE CONTRACTORS EXPENSE. A COPY OF THE OSHA EXCAVATION PERMIT MUST BE SUBMITTED TO THE INSPECTOR PRIOR TO EXCAVATION.
16. IF ANY ARCHAEOLOGICAL RESOURCES ARE DISCOVERED WITHIN ANY WORK ZONE DURING CONSTRUCTION, OPERATIONS WILL CEASE IMMEDIATELY, AND THE PERMITTEE WILL NOTIFY THE CITY ENGINEER. OPERATIONS WILL NOT RESTART UNTIL THE PERMITTEE HAS RECEIVED WRITTEN AUTHORITY FROM THE CITY ENGINEER TO DO SO.
17. ALL OPERATIONS CONDUCTED ON THE SITE OR ADJACENT THERETO, INCLUDING WARMING UP, REPAIR, ARRIVAL, DEPARTURE OR OPERATION OF TRUCKS, EARTHMOVING EQUIPMENT, CONSTRUCTION EQUIPMENT AND ANY OTHER ASSOCIATED GRADING EQUIPMENT SHALL BE LIMITED TO THE PERIOD BETWEEN 7:00 A.M. AND SUNSET EACH DAY, MONDAY THRU FRIDAY AND NO EARTHMOVING OR GRADING OPERATIONS SHALL BE CONDUCTED ON WEEKENDS OR HOLIDAYS. (A LIST OF CITY HOLIDAYS IS AVAILABLE AT THE ENGINEERING DEPARTMENT COUNTER.)
18. ALL OFF-SITE HAUL ROUTES SHALL BE SUBMITTED BY THE CONTRACTOR TO THE CITY ENGINEER FOR APPROVAL TWO FULL WORKING DAYS PRIOR TO BEGINNING OF WORK. THE CONTRACTOR SHALL BE RESPONSIBLE FOR ANY DEBRIS OR DAMAGE OCCURRING ALONG THE HAUL ROUTE OR ADJACENT STREETS AS A RESULT OF THE GRADING OPERATION.
19. NO BLASTING SHALL BE COMMENCED WITHOUT A CITY ENGINEER APPROVED BLASTING PROGRAM AND BLASTING PERMIT.
20. THE EXISTENCE AND LOCATION OF UTILITY STRUCTURES AND FACILITIES SHOWN ON THE CONSTRUCTION PLANS WERE OBTAINED BY A SEARCH OF THE AVAILABLE RECORDS. ATTENTION IS CALLED TO THE POSSIBLE EXISTENCE OF OTHER UTILITY FACILITIES OR STRUCTURES NOT SHOWN OR IN A LOCATION DIFFERENT FROM THAT SHOWN ON THE PLANS. THE CONTRACTOR IS REQUIRED TO TAKE DUE PRECAUTIONARY MEASURES TO PROTECT THE UTILITIES SHOWN ON THE PLANS AND ANY OTHER EXISTING FACILITIES OR STRUCTURES NOT SHOWN.
21. THE CONTRACTOR SHALL VERIFY THE LOCATION OF ALL EXISTING FACILITIES (ABOVEGROUND AND UNDERGROUND) WITHIN THE PROJECT SITE SUFFICIENTLY AHEAD OF THE CONSTRUCTION TO PERMIT THE REVISIONS OF THE CONSTRUCTION PLANS IF IT IS FOUND THAT THE ACTUAL LOCATIONS ARE IN CONFLICT WITH THE PROPOSED WORK.
22. THE CONTRACTOR SHALL NOTIFY AFFECTED UTILITY COMPANIES (SEE BELOW) AT LEAST TWO FULL WORKING DAYS PRIOR TO STARTING CONSTRUCTION NEAR THEIR FACILITIES AND SHALL COORDINATE WORK WITH A COMPANY REPRESENTATIVE.

UNDERGROUND SERVICE ALERT	(800)422-4133
SDG&E	(800)660-7343
PACIFIC BELL	(800)892-0123
TIME WARNER CABLE	(760)438-7741
COX COMMUNICATIONS	(760)806-9809
CITY OF CARLSBAD(STREETS AND STORM DRAIN)	(760)434-2980
*CITY OF CARLSBAD(SEWER,WATER & RECLAIMED WATER)	(760)438-2722
*SAN DIEGUITO WATER DISTRICT	(760)633-2650
*LEUCADIA WASTEWATER DISTRICT	(760)753-0155
*VALLECITOS WATER DISTRICT	(760)744-0460
*OLIVENHAIN WATER DISTRICT	(760)753-6466
*BUENA SANITATION DISTRICT	(760)726-1340

* AS APPROPRIATE

STREET NOTES

1. ACTUAL STRUCTURAL SECTIONS WILL BE DETERMINED AFTER "R" VALUE TESTS HAVE BEEN CONDUCTED BY A PROFESSIONAL ENGINEER OF THE STATE OF CALIFORNIA, PRINCIPALLY DOING BUSINESS IN THE FIELD OF APPLIED SOIL MECHANICS, ON THE PREPARED BASEMENT SOIL. THE "R" VALUE TESTS AND THE ENGINEERED STRUCTURAL SECTION MUST BE SUBMITTED TO THE ENGINEERING INSPECTOR FOR REVIEW AND APPROVAL A MINIMUM OF TWO (2) CITY WORKING DAYS BEFORE THE WORK BEGINS.
2. STREET LIGHTS SHALL BE INSTALLED AS SHOWN ON THESE PLANS, UNDERGROUND CONDUIT RUNS, SERVICE POINTS AND HAND-HOLES SHALL BE SHOWN ON THE "AS-BUILT" PLANS. NO DIRECT BURIAL STREET LIGHT FOUNDATIONS WILL BE ALLOWED. ALL LUMINAIRES SHALL BE "CUT OFF" TYPE.
3. ALL UNDERGROUND UTILITIES AND LATERALS SHALL BE INSTALLED PRIOR TO CONSTRUCTION OF CURBS, CROSS GUTTERS OR SURFACING OF STREETS.
4. WHERE AN EXISTING PIPE LINE IS TO BE ABANDONED IT SHALL BE REMOVED WITHIN TWENTY FEET OF BUILDING OR STREET AREAS AND REPLACED WITH PROPERLY COMPACTED SOILS. IN OTHER AREAS THE PIPE WILL BE PLUGGED WITH CONCRETE OR REMOVED AS APPROVED BY THE CITY ENGINEER.
5. WHEELCHAIR RAMPS SHALL BE INSTALLED PER REQUIREMENTS OF TITLE 24, CALIFORNIA ADMINISTRATIVE CODE.
6. STREET TREES SHALL BE INSTALLED PER SECTION IV D.3 OF THE CITY OF CARLSBAD LANDSCAPE MANUAL.
7. FIRE HYDRANT MARKERS SHALL BE PLACED IN THE STREET WITHIN THE LIMITS OF WORK OF THIS PLAN PER SDRS DWG M19.
8. ALL SURVEY MONUMENTS AND POINTS THAT ARE DISTURBED BY THIS WORK SHALL BE REESTABLISHED, PERPETUATED, AND DOCUMENTED PER THE PROFESSIONAL LAND SURVEYORS ACT.
9. TWO (2) SETS OF SURVEY (CUT) SHEETS SHALL BE PROVIDED TO THE CITY ENGINEERING INSPECTOR.

SEWER NOTES

1. SEWER MAIN AND APPURTENANCES SHALL BE CONSTRUCTED IN ACCORDANCE WITH THE "CITY OF CARLSBAD ENGINEERING STANDARDS (LATEST EDITION), VOLUME 1- GENERAL DESIGN STANDARDS, CHAPTER 6-DESIGN CRITERIA FOR GRAVITY SEWER LINES AND APPURTENANCES, AND VOLUME 3 - STANDARD DRAWINGS AND NOTES AND THE STANDARD SPECIFICATIONS FOR PUBLIC WORKS CONSTRUCTION, LATEST EDITION (GREEN BOOK).
2. THE CONTRACTOR SHALL OBTAIN AN EXCAVATION PERMIT FROM THE DIVISION OF INDUSTRIAL SAFETY BEFORE ANY EXCAVATION AND SHALL ADHERE TO ALL PROVISIONS OF THE STATE CONSTRUCTION SAFETY ORDERS.
3. BEFORE ANY CONNECTION TO THE DISTRICT'S EXISTING SYSTEM, A PERMIT SHALL BE OBTAINED FROM THE DISTRICT. IT MUST BE SIGNED AND APPROVED BY THE DISTRICT'S ENGINEER AND SUPERINTENDENT.
4. BEFORE CONSTRUCTION BEGINS IN ANY PUBLIC RIGHT OF WAY, A CITY RIGHT OF WAY PERMIT SHALL BE REQUIRED.
5. THE CONTRACTOR SHALL NOTIFY THE CITY OF CARLSBAD ENGINEERING INSPECTION 48 HOURS PRIOR TO THE BEGINNING OF CONSTRUCTION. (TELEPHONE NO. [760] 438-3891)

WATER NOTES

1. WATER & RECYCLED WATER MAIN AND APPURTENANCES SHALL BE CONSTRUCTED IN ACCORDANCE WITH THE "CITY OF CARLSBAD ENGINEERING STANDARDS" (LATEST EDITION) VOLUMES 2 & 3.
2. THE CONTRACTOR SHALL OBTAIN AN EXCAVATION PERMIT FROM THE DIVISION OF INDUSTRIAL SAFETY BEFORE ANY EXCAVATION AND SHALL PROVIDE PROOF OF OSHA NOTIFICATION AND SHALL ADHERE TO ALL PROVISIONS OF THE STATE CONSTRUCTION SAFETY ORDERS.
3. BEFORE ANY CONNECTION OR SHUT DOWN OF VALVES ON EXISTING C.M.W.D. LINES, A PERMIT SHALL BE OBTAINED FROM THE C.M.W.D. OFFICE AND MUST BE SIGNED AND APPROVED BY THE CITY OF CARLSBAD'S DEPUTY CITY ENGINEER AND THE UTILITY OPERATIONS' PUBLIC WORKS MANAGER.
4. A PRECONSTRUCTION CONFERENCE MEETING SHALL BE HELD A MINIMUM OF 7 DAYS BEFORE CONSTRUCTION BEGINS. THE CONTRACTOR SHALL NOTIFY THE CITY OF CARLSBAD ENGINEERING INSPECTION 48 HOURS PRIOR TO BEGINNING OF CONSTRUCTION, TELEPHONE NO.(760) 438-3891 FOR SCHEDULING.
5. THE CONTRACTOR SHALL NOTIFY THE CITY OF CARLSBAD ENGINEERING INSPECTION DEPARTMENT 48 HOURS PRIOR TO STARTING WORK SO THAT INSPECTION MAY BE PROVIDED - TELEPHONE NO. (760)438-3891.
6. NO TREES OR STRUCTURES SHALL BE ALLOWED IN THE WATER LINE EASEMENT, ALL EXISTING TREES AND STRUCTURES SHALL BE REMOVED PRIOR TO COMMENCEMENT OF WORK - ANY EXCEPTIONS SHALL REQUIRE WRITTEN PERMISSION FROM THE DISTRICT ENGINEER.
7. ALL BURIED COPPER PIPING AND APPURTENANCES SHALL BE PROTECTED BY MEANS OF CATHODIC PROTECTION. IF DEVELOPER/OWNER CONDUCTS A SOILS TEST REPORT AND DEMONSTRATES THAT PROTECTION CAN BE PERFORMED IN ANOTHER MANNER, THE DISTRICT ENGINEER WILL CONSIDER AN ALTERNATIVE FORM OF PROTECTION.
8. THE EXACT HORIZONTAL AND VERTICAL ALIGNMENT AND TYPE OF MATERIALS OF THE FIRE LINE LOCATED BETWEEN THE DETECTOR CHECK VALVE AND BUILDING SHALL BE DETERMINED BY THE CITY OF CARLSBAD FIRE MARSHAL.
9. ALL POTABLE WATER AND RECYCLED WATER SERVICES SHALL BE 1" AND ALL METERS SHALL BE 5/8" (UNLESS OTHERWISE NOTED ON PLANS).
10. ALL WATER METER BOXES SHALL BE 17" X 30" X 12" POLYMER CONCRETE AS MANUFACTURED BY ARMORCAST OR EQUAL.
11. MINIMUM SPACING BETWEEN POTABLE WATER LATERALS AND SEWER SERVICES SHALL BE 10 FEET.
12. THE TOP OF WATER METER BOXES SHALL BE FLUSH WITH THE FINISHED SURFACE GRADE.
13. CONSTRUCTION OF WATER MAINS AND RECYCLED WATER MAINS SHALL ADHERE TO THE "CRITERIA FOR THE SEPARATION OF WATER MAINS AND SANITARY SEWERS" PUBLISHED BY THE STATE OF CALIFORNIA'S DEPARTMENT OF HEALTH SERVICES.
14. AXIAL DEFLECTION AT THE PIPE JOINTS ARE NOT ALLOWED. THE USE OF A HIGH-DEFLECTION COUPLING AT A PIPE JOINT MAY BE PERMITTED BY THE INSPECTOR ON A CASE BY CASE BASIS NOT TO EXCEED 4 DEGREES TOTAL DEFLECTION PER COUPLING (2 DEGREES/EACH GASKET). USE CERTAINTEED "VINYL-IRON" H.D. FOR C900.

"DECLARATION OF RESPONSIBLE CHARGE"

I HEREBY DECLARE THAT I AM THE ENGINEER OF WORK FOR THIS PROJECT, THAT I HAVE EXERCISED RESPONSIBLE CHARGE OVER THE DESIGN OF THE PROJECT AS DEFINED IN SECTION 6703 OF THE BUSINESS AND PROFESSIONS CODE, AND THAT THE DESIGN IS CONSISTENT WITH CURRENT STANDARDS.

I UNDERSTAND THAT THE CHECK OF PROJECT DRAWINGS AND SPECIFICATIONS BY THE CITY OF CARLSBAD DOES NOT RELIEVE ME AS ENGINEER OF WORK, OF MY RESPONSIBILITIES FOR PROJECT DESIGN.

FIRM: _____

ADDRESS: _____

CITY, ST.: _____

TELEPHONE: _____

BY: _____ DATE: _____
(NAME OF ENGINEER)

R.C.E. NO.: _____

REGISTRATION EXPIRATION DATE: _____

SIGNING AND STRIPING NOTES

1. THE CONTRACTOR IS RESPONSIBLE FOR INSTALLING ALL SIGNING AND STRIPING.
2. SIGNING, STRIPING AND PAVEMENT MARKINGS SHALL CONFORM TO THE CALIFORNIA MANUAL ON UNIFORM TRAFFIC CONTROL DEVICES (FHWA'S MUTCD 2003 REVISION 1, AS AMENDED FOR USE IN CALIFORNIA), CALTRANS STANDARD SPECIFICATIONS (JULY 2006 OR LATEST VERSION THEREOF), THESE PLANS AND THE SPECIAL PROVISIONS.
3. ALL SIGNING AND STRIPING IS SUBJECT TO THE APPROVAL OF THE PUBLIC WORKS DIRECTOR OR HIS REPRESENTATIVE, PRIOR TO INSTALLATION.
4. ANY DEVIATION FROM THESE SIGNING AND STRIPING PLANS SHALL BE APPROVED BY THE ENGINEER OF WORK AND PUBLIC WORKS DIRECTOR PRIOR TO ANY CHANGE IN THE FIELD.
5. ALL SIGNING AND STRIPING SHALL BE REFLECTIVE PER CALTRANS SPECIFICATIONS. STRIPING SHALL BE REPAINTED TWO WEEKS AFTER INITIAL PAINTING. SIGNING SHALL USE ENCAPSULATED LENS REFLECTIVE SHEETING (HIGH INTENSITY OR EQUAL.).
6. PRIOR TO FINAL ACCEPTANCE OF STREET IMPROVEMENTS, ALL STREET STRIPING AND AND MARKINGS WITHIN A 500' PERIMETER OF THE CONSTRUCTION PROJECT WILL BE RESTORED TO A "LIKE NEW" CONDITION, IN A MANNER MEETING THE APPROVAL OF THE CITY INSPECTOR.
7. EXACT LOCATION OF STRIPING AND STOP LIMIT LINES SHALL BE APPROVED BY THE PUBLIC WORKS DIRECTOR OR HIS REPRESENTATIVE PRIOR TO INSTALLATION.
8. CONTRACTOR SHALL REMOVE ALL CONFLICTING PAINTED LINES, MARKINGS AND PAVEMENT LEGENDS BY GRINDING. DEBRIS SHALL BE PROMPTLY REMOVED BY THE CONTRACTOR.
9. ALL PAVEMENT LEGENDS SHALL BE THE LATEST VERSION OFTHE CALTRANS METRIC STENCILS.
10. LIMIT LINES AND CROSSWALKS SHALL BE FIELD LOCATED. CROSSWALKS SHALL HAVE 10' INSIDE DIMENSION UNLESS OTHERWISE SPECIFIED.
11. ALL CROSSWALKS, LIMIT LINES, STOP BARS, PAVEMENT ARROWS AND PAVEMENT LEGENDS SHALL BE THERMOPLASTIC UNLESS OTHERWISE SPECIFIED.
12. FIRE HYDRANT PAVEMENT MARKERS SHALL CONFORM TO THE CALIFORNIA MANUAL ON UNIFORM TRAFFIC CONTROL DEVICES (FHWA'S MUTCD 2003 REVISION 1, AS AMENDED FOR USE IN CALIFORNIA) AND SAN DIEGO REGIONAL STANDARD DRAWING M-19.
13. ALL MEDIAN NOSES AND FLARES SHALL BE PAINTED YELLOW.
14. ALL SIGNS SHALL BE STANDARD SIZE AS SHOWN IN THE CALIFORNIA MANUAL ON UNIFORM TRAFFIC CONTROL DEVICES (FHWA'S MUTCD 2003 REVISION1, AS AMENDED FOR USE IN CALIFORNIA) UNLESS OTHERWISE SPECIFIED.
15. SIGN POSTS SHALL BE SQUARE PERFORATED STEEL TUBING WITH BREAKAWAY BASE PER SAN DIEGO REGIONAL STANDARD DRAWING M-45.
16. WHEN A SIGN IS ATTACHED TO A POLE, IT SHALL BE MOUNTED USING A STANDARD CITY OF CARLSBAD MOUNTING BRACKET WITH STRAPS.
17. EXISTING SIGNS REMOVED BY THE CONTRACTOR SHALL BE DELIVERED BY THE CONTRACTOR TO THE CITY OF CARLSBAD PUBLIC WORKS YARD AT 405 OAK AVENUE.
18. ALL SIGNS SHOWN ON THESE PLANS SHALL BE NEW SIGNS PROVIDED AND INSTALLED BY THE CONTRACTOR EXCEPT THOSE SIGNS SPECIFICALLY SHOWN AS EXISTING TO BE RELOCATED OR TO REMAIN.
19. (IF NECESSARY) WHERE R4-7 SIGN AND OM1-3 OBJECT MARKER ARE TO BE INSTALLED IN A 2-FOOT WIDE MEDIAN NOSE, THE R4-7 SIGN SHALL BE 18"X24" AND THE OM1-3 OBJECT MARKER SHALL BE 12"X12"

INDEX OF SHEETS

REFERENCE DRAWINGS

BASIS OF BEARINGS

SOURCE OF TOPOGRAPHY

TOPOGRAPHY SHOWN ON THESE PLANS WAS GENERATED BY_____ _____ METHODS FROM INFORMATION GATHERED ON _____, 20____ BY_____.
TOPOGRAPHY SHOWN HEREON CONFORMS TO NATIONAL MAP ACCURACY STANDARDS.

PROJECT LOCATION

THIS PROJECT IS LOCATED WITHIN ASSESSORS PARCEL NUMBER(S) _____,
THE CALIFORNIA COORDINATE INDEX OF THIS PROJECT IS N_____ E_____.

BENCH MARK

DESCRIPTION: _____
LOCATION: _____
_____
RECORDED: _____
ELEVATION: _____ DATUM: _____

VICINITY MAP

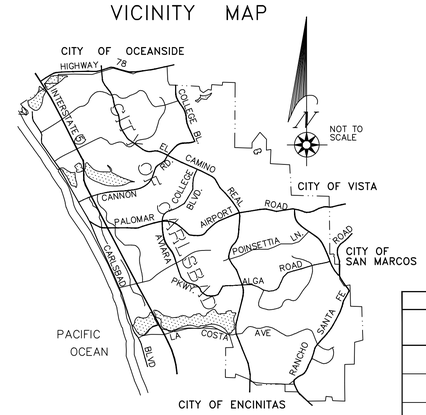

WORK TO BE DONE

THE IMPROVEMENT WORK SHALL BE PERFORMED IN ACCORDANCE WITH THE FOLLOWING DOCUMENTS, CURRENT AT THE TIME OF CONSTRUCTION, AS DIRECTED BY THE CITY ENGINEER.

1. CARLSBAD MUNICIPAL CODE
2. CITY OF CARLSBAD ENGINEERING STANDARDS
3. THIS SET OF PLANS
4. RESOLUTION NO._____ DATED_____
5. THE STANDARD SPECIFICATIONS FOR PUBLIC WORKS CONSTRUCTION (GREEN BOOK).
6. SOILS REPORT AND RECOMMENDATIONS BY _____ _____ DATED_____
7. THE SAN DIEGO AREA REGIONAL STANDARD DRAWINGS AND AS MAY BE MODIFIED BY THE CITY OF CARLSBAD STANDARDS.
8. CALIFORNIA COASTAL COMMISSION DEVELOPMENT PERMIT CONDITIONS DATED _____
9. STORM WATER POLLUTION PREVENTION PLAN PREPARED BY _____ DATED _____ WDID NO. 9 37S _____.
10. STORM WATER MANAGEMENT PLAN PREPARED BY _____ DATED _____.
11. CALIFORNIA STORM WATER QUALITY ASSOCIATION BMP CONSTRUCTION HANDBOOK AND CALTRANS CONSTRUCTION SITE BMP MANUAL.

LEGEND

DESCRIPTION	DWG. NO.	SYMBOL	QUANTITY

REQUIRED TREATMENT CONTROL BMP TABLE

TYPE	DESCRIPTION	OWNERSHIP	MAINTENANCE AGREEMENT	SHEET NO.	MAINTENANCE FREQUENCY

SUSMP PROJECT PRIORITY _____

CARLSBAD MUNICIPAL WATER DISTRICT

DAVID A. HAUSER DATE
DEPUTY CITY ENGINEER R.C.E. 33081 EXP. 6/30/10

CITY OF CARLSBAD FIRE DEPARTMENT
REQUIREMENTS
NO. OF F.H.(S)____F.FLOW_____G.P.M. OUT OF____F.H.(S).
BLDG. SPRINKLED YES/NO. . . F.FLOW_____G.P.M.

FIRE MARSHAL DATE

"AS BUILT"

P.E. _____ EXP. _____ DATE

REVIEWED BY:

INSPECTOR DATE

DATE	INITIAL	REVISION DESCRIPTION	DATE	INITIAL	DATE	INITIAL
ENGINEER OF WORK			OTHER APPROVAL		CITY APPROVAL	

SHEET | CITY OF CARLSBAD ENGINEERING DEPARTMENT | SHEETS

IMPROVEMENT PLANS FOR:

TITLE SHEET

APPROVED: GLEN K. VAN PESKI

SENIOR CIVIL ENGINEER PE 41204 EXPIRES 3/31/11 DATE

DWN BY: _____
CHKD BY: _____
RVWD BY: _____

PROJECT NO. | DRAWING NO.

RECYCLED WATER SYSTEM (PRIVATE)

PROJECT NAME

(PROJECT ADDRESS)

RW XXXX

SHEET TITLE	SHEET NUMBER
TITLE SHEET	
IRRIG. LEGEND & NOTES	
IRRIGATION PLANS	
IRRIGATION DETAILS	

GENERAL NOTES

RECYCLED WATER NOTES

1. ALL WORK SHALL BE DONE IN ACCORDANCE WITH THE CARLSBAD MUNICIPAL WATER DISTRICT'S RULES AND REGULATIONS.
2. DRINKING WATER FOUNTAINS AND DESIGNATED OUTDOOR EATING AREAS SHALL BE PROTECTED AGAINST CONTACT WITH RECYCLED WATER SPRAY, MIST OR MISTING.
3. BEST MANAGEMENT PRACTICES SHALL BE USED TO ELIMINATE OR CONTROL TO THE BEST EXTENT POSSIBLE PONDING, RUN–OFF, OVER–SPRAY, AND MISTING.
4. HOSE BIBS ARE STRICTLY PROHIBITED.
5. CROSS–CONNECTIONS BETWEEN RECYCLED WATER LINES AND POTABLE WATER LINES ARE STRICTLY PROHIBITED.
6. NO SUBSTITUTION OF PIPE MATERIALS WILL BE ALLOWED WITHOUT PRIOR APPROVAL OF THE CITY OF CARLSBAD MUNICIPAL WATER DISTRICT.
7. ALL MAINLINE PIPES SHALL HAVE WARNING TAPE PER CARLSBAD MUNICIPAL WATER DISTRICT'S RULES AND REGULATIONS.
8. HOURS FOR IRRIGATION WITH RECYCLED WATER ARE FROM 9:00 P.M. TO 6:00 A.M. THE HOURS FOR IRRIGATION WITH DISINFECTED TERTIARY RECYCLED WATER MAY BE MODIFIED BY THE LOCAL AUTHORITY. IRRIGATION DURING PUBLIC USE PERIODS WITH DISINFECTED TERTIARY RECYCLED WATER SHALL BE UNDER THE SUPERVISION OF THE DESIGNATED USER SUPERVISOR. IRRIGATION WITH WATER OF A LESSER QUALITY THAN DISINFECTED TERTIARY RECYCLED WATER SHALL BE BETWEEN THE HOURS OF 9:00 P.M. TO 6:00 A.M.
9. BURIAL OF ALL WIRING AND PIPING SHALL MEET CARLSBAD MUNICIPAL WATER DISTRICT'S RULES AND REGULATIONS.
10. NON–DESIGNATED USE AREAS SHALL BE PROTECTED FROM CONTACT WITH RECYCLED WATER, WHETHER BY WIND BLOWN SPRAY OR BY DIRECT APPLICATION THROUGH IRRIGATION OR OTHER USE. LACK OF PROTECTION, WHETHER BY DESIGN, CONSTRUCTION PRACTICE OR SYSTEM OPERATION IS STRICTLY PROHIBITED.
11. IRRIGATION HEADS SHALL BE RELOCATED OR ADJUSTED TO MINIMIZE OR ELIMINATE OVER–SPRAYING ON SIDEWALKS, STREETS AND NON–DESIGNATED USE AREAS.
12. RECYCLED WATER QUICK COUPLING VALVES SHALL BE OF A TYPE DESIGNED FOR THE USE ON RECYCLED WATER DISTRIBUTION SYSTEMS PER CARLSBAD MUNICIPAL WATER DISTRICT'S RULES AND REGULATIONS.
13. ON RECYCLED WATER SYSTEMS, ALL APPURTENANCES (SPRINKLER HEADS, VALVE BOXES, ETC.) SHALL BE COLOR–CODED PURPLE PER AWWA GUIDELINES AND SECTION 116815 OF THE CALIFORNIA HEALTH AND SAFETY CODE.
14. ALL IRRIGATION PIPE SHALL BE STENCILED WITH WARNING, "NON–POTABLE OR RECYCLED WATER", COLOR–CODED (PURPLE) AND LAID WITH WARNING TAPE AND STENCILING ORIENTED TOWARD THE TOP OF THE TRENCH PER THE CARLSBAD MUNICIPAL WATER DISTRICT'S RULES AND REGULATIONS.
15. ON NEW ON–SITE SYSTEMS (POST–METER), POTABLE WATER, CONSTANT PRESSURE RECYCLED WATER AND SEWER LINES SHOULD BE PLACED A MINIMUM OF FOUR FEET APART OR AS DIRECTED BY THE PROJECT ENGINEER AND/OR REGULATORY AGENCY. MEASUREMENTS SHALL BE BETWEEN FACING SURFACES, NOT PIPE CENTERLINES.
16. CONSTANT PRESSURE RECYCLED WATER LINES SHALL CROSS AT LEAST TWELVE INCHES BELOW POTABLE WATER LINES AND MAINTAIN AT LEAST TWELVE INCHES CROSSING SEPARATION BETWEEN OTHER UTILITIES.
17. IF A CONSTANT PRESSURE RECYCLED WATER LINE MUST BE INSTALLED ABOVE A POTABLE WATER LINE OR LESS THAN TWELVE INCHES BELOW A POTABLE WATER LINE, THEN THE RECYCLED WATER LINE SHALL BE INSTALLED WITHIN AN APPROVED PROTECTIVE SLEEVE AS PER THE CARLSBAD MUNICIPAL WATER DISTRICT'S RULES AND REGULATIONS.
18. THE REQUIRED CROSS–CONNECTION SHUTDOWN TEST SHALL BE DONE BY THE CARLSBAD MUNICIPAL WATER DISTRICT AND THE SAN DIEGO COUNTY DEPARTMENT OF ENVIRONMENTAL HEALTH.
19. THE REQUIRED CROSS–CONNECTION INSPECTION SHALL BE DONE BY EITHER THE CARLSBAD MUNICIPAL WATER DISTRICT AND/OR THE SAN DIEGO COUNTY DEPARTMENT OF ENVIRONMENTAL HEALTH. COPIES OF INSPECTION REPORTS WILL BE FORWARDED TO THE NON–INSPECTING PARTY.
20. THE DESIGN AND LOCATIONS PROPOSED FOR RECYCLED WATER "DO NOT DRINK" SIGN SHALL BE CALLED OUT ON THE PLANS.
21. WHEN RECYCLED WATER BECOMES AVAILABLE, AN ON–SITE USER SUPERVISOR SHALL BE DESIGNATED IN WRITING. THIS INDIVIDUAL SHALL BE FAMILIAR WITH PLUMBING SYSTEM WITHIN THE PROPERTY, WITH THE BASIC CONCEPTS OF BACKFLOW/CROSS–CONNECTION PROTECTION, THE RECYCLED PUREYOR'S RULES AND REGULATIONS AND THE SPECIFIC REQUIREMENTS OF A RECYCLED WATER SYSTEM. COPIES OF THE DESIGNATION, WITH CONTACT PHONE NUMBERS SHALL BE PROVIDED TO THE CARLSBAD MUNICIPAL WATER DISTRICT.

    IN CASE OF EMERGENCY CONTACT AT

    OR AFTER HOURS CONTACT AT

22. ALL PUBLIC AND PRIVATE POTABLE WATER MAINS INCLUDING FIRE MAINS AND ANY WATER WELLS AND WATER COURSES WITHIN THE RECYCLED WATER PROJECT SHALL BE SHOWN ON THE PLANS.
23. CALL OUT ON THE PLANS IF THERE ARE OR ARE NOT DRINKING FOUNTAINS AND/OR DESIGNATED OUTDOOR EATING AREAS ON THE SITE.
24. A PHYSICAL SEPARATION SHALL BE PROVIDED BETWEEN ADJACENT AREAS IRRIGATED WITH RECYCLED WATER AND POTABLE WATER. SEPARATION SHALL BE PROVIDED BY DISTANCE, CONCRETE MOW STRIPS OR OTHER APPROVED METHODS.
25. ALL IRRIGATION BACKFLOW PREVENTERS SHALL BE TESTED BY A CERTIFIED TESTER AND RESULTS MUST BE GIVEN TO THE CITY AND THE CARLSBAD MUNICIPAL WATER DISTRICT. PIPE BETWEEN THE METER AND BACKFLOW PREVENTER SHALL BE "SCHEDULE K HARD COPPER". APPROVED CONTRACT BACKFLOW TESTERS CAN BE FOUND ON THE CITY WEB SITE AT WWW.CI.CARLSBAD.CA.US/PDFDOC.HTML?PID=340.

SIGNAGE NOTES

THE FOLLOWING GUIDELINES FOR THE USE OF RECYCLED WATER ARE TO BE PERMANENTLY POSTED INSIDE THE DOOR OF EACH CONTROLLER WHERE THEY ARE EASILY VISIBLE. PLACE ON 8–1/2" X 11" SIZED SIGN.

COLOR: PURPLE BACKGROUND WITH BLACK LETTERING.

1. GUIDELINES FOR RECYCLED WATER USE

   A. IRRIGATE BETWEEN THE HOURS OF 10:00 P.M. AND 6:00 A.M. ONLY. WATERING OUTSIDE THIS TIME FRAME MUST BE DONE MANUALLY WITH QUALIFIED SUPERVISORY PERSONNEL ON–SITE. NO SYSTEM SHALL AT ANY TIME BE LEFT UNATTENDED DURING USE OUTSIDE THE NORMAL SCHEDULE.

   B. IRRIGATE IN A MANNER THAT WILL MINIMIZE RUN–OFF, POOLING, AND PONDING. THE APPLICATION RATE SHALL NOT EXCEED THE INFILTRATION RATE OF THE SOIL. TIMERS MUST BE ADJUSTED SO AS TO BE COMPATIBLE WITH THE LOWEST SOIL INFILTRATION RATE PRESENT. THIS PROCEDURE MAY BE FACILITATED BY THE EFFICIENT SCHEDULING OF THE AUTOMATIC CONTROL CLOCKS, (I.E., EMPLOYING THE REPEAT FUNCTION TO BREAK UP THE TOTAL IRRIGATION TIME INTO CYCLES THAT WILL PROMOTE MAXIMUM SOIL ABSORPTION).

   C. ADJUST SPRAY HEADS TO ELIMINATE OVERSPRAY ONTO AREAS NOT UNDER THE CONTROL OF THE CUSTOMER. FOR EXAMPLE, POOL DECKS, PRIVATE PATIOS AND LOTS, AND STREETS AND SIDEWALKS.

   D. MONITOR AND MAINTAIN THE SYSTEM TO MINIMIZE EQUIPMENT AND MATERIAL FAILURE. BROKEN SPRINKLER HEADS, LEAKS, UNRELIABLE VALVES, ETC., SHOULD BE REPAIRED AS SOON AS THEY BECOME APPARENT.

   E. THE LANDSCAPE CONTRACTOR IS RESPONSIBLE FOR EDUCATING EACH EMPLOYEE AND ALL MAINTENANCE PERSONNEL ON A CONTINUOUS BASIS, REGARDING THE PRESENCE OF RECYCLED WATER. MAINTENANCE PERSONNEL MUST BE INFORMED THAT WATER IS FOR IRRIGATION PURPOSES ONLY AND IS NOT APPROVED FOR DRINKING OR FOR HAND AND TOOL WASHING, ETC.

   F. OBTAIN PRIOR APPROVAL OF ALL PROPOSED CHANGES AND MODIFICATIONS TO ANY PRIVATE ON–SITE FACILITIES. SUCH CHANGES MUST BE SUBMITTED TO, AND APPROVED BY, THE DISTRICT ENGINEERING OFFICE AND DESIGNED IN ACCORDANCE WITH DISTRICT STANDARDS.

      1. ALL RECYCLED WATER SPRINKLER CONTROL VALVES SHALL BE TAGGED WITH IDENTIFICATION TAGS.

         A. TAGS SHALL BE WEATHERPROOF PLASTIC, 3"x 4", PURPLE IN COLOR, WITH THE WORDS "WARNING RECYCLED WATER – DO NOT DRINK" IMPRINTED ON ONE SIDE, AND "AVISO – AGUA IMPURA– NO TOMAR" IMPRINTED ON THE OTHER SIDE. IMPRINTING SHALL BE PERMANENT AND BLACK IN COLOR. USE TAGS AS MANUFACTURED BY T. CHRISTY ENTERPRISES OR APPROVED EQUAL.

         B. ONE TAG SHALL BE ATTACHED TO EACH VALVE AS FOLLOWS:

            1. ATTACH TO VALVE STEM DIRECTLY OR WITH PLASTIC TIE–WRAP OR
            2. ATTACH TO SOLENOID WIRE DIRECTLY OR WITH PLASTIC TIE–WRAP OR
            3. ATTACH TO VALVE COVER WITH EXISTING VALVE COVER BOLT.

      2. ALL SPRINKLER HEADS SHALL BE IDENTIFIED AS RECYCLED WATER SPRINKLER HEADS.

   G. EACH AUTOMATIC CONTROLLER AND ITS ASSOCIATED EQUIPMENT SHALL BE IDENTIFIED WITH A SIGN BEARING THE WORDS "RECYCLED WATER USED FOR IRRIGATION" IN ENGLISH AND SPANISH, WITH BLACK LETTERS 1" HIGH ON A PURPLE BACKROUND. THE SIGN SHALL BE PLACED SO THAT IT CAN BE READILY SEEN BY ANY OPERATIONS PERSONNEL UTILIZING THE EQUIPMENT.

DECLARATION OF RESPONSIBLE CHARGE:

I HEREBY DECLARE THAT I AM _____ OF WORK FOR THIS PROJECT, THAT I HAVE EXERCISED RESPONSIBLE CHARGE OVER THE DESIGN OF THIS PROJECT AS DEFINED IN SECTION 6703 OF THE BUSINESS AND PROFESSIONS CODE AND THAT THE DESIGN IS CONSISTENT WITH CURRENT STANDARDS.

I UNDERSTAND THAT THE CHECK OF PROJECT DRAWINGS AND SPECIFICATIONS BY THE CITY OF CARLSBAD AND SAN DIEGO COUNTY DEPARTMENT OF HEALTH SERVICES IS CONFINED TO A REVIEW ONLY AND DOES NOT RELIEVE ME, AS _____ OF WORK, OF MY RESPONSIBILITIES FOR PROJECT DESIGN.

FIRM NAME & ADDRESS:

_____

_____

_____

PHONE NO: (____) _____

REGISTRATION NO: _____ EXPIRATION DATE: _____

PROJECT MAP

SHOW ON MAP:

STREETS & STREET NAMES, SHEET & SHEET NUMBERS, DWELLING UNITS, DRINKING FOUNTAINS, LIMIT LINE OF RECYCLED WATER USE, MAIN LINE GATE VALVES, METERS, LAKES & RECREATIONAL AREAS, OPEN SPACE AREAS, NORTH ARROW, SCALE OF MAP, BOUNDARY LIMITS, MATCH LINES, SCALE, ASSESSORS PARCEL NUMBER, INDEX OF SHEETS, RESERVOIRS, SHOW POINTS OF CONNECTION AND LOCATION OF "DO NOT DRINK" SIGNS.

REGARDING THE FOLLOWING SHEETS:

THE NEXT ONE OR MORE SHEETS SHOULD BE THE IRRIGATION & LANDSCAPE NOTES, SYMBOLS, LEGENDS, ETC. AFTER THESE SHEETS WILL BE YOUR ACTUAL CONSTRUCTION (IRRIGATION) PLANS. LAST SHEET/S WILL BE YOUR DETAIL SHEETS.

KEEP IN MIND THE OBJECTIVE IS TO HAVE A PLAN THAT IS UNDERSTANDABLE TO OPERATION AND MAINTENANCE PEOPLE. THE INDEX–KEY MAP SHOULD ENABLE A PERSON TO EASILY LOCATE THE CONTROL VALVES AND QUICKLY GAIN AN UNDERSTANDING OF THE ENTIRE RECYCLED SYSTEM AND IT'S LIMITS.

IMPROVEMENT PLANS INCLUDE:

A DESCRIPTION & LOCATION OF WATER SERVICES INCLUDING TYPE (DOMESTIC OR RECYCLED). DESIGN P.S.I. AND INSTALLATION REQUIREMENTS, MINIMUM VERTICAL DEPTH, HORIZONTAL SEPARATION, IDENTIFICATION, AND CROSS CONNECTION CONTROL. LOCATE ALL PUBLIC FACILITIES INCLUDING DRINKING FOUNTAINS, FOOD SERVICE AND PICNIC AREAS, SWIMMING POOLS, SIDEWALK AREAS, EATING TABLES AND AREAS, WALLS, TOPOGRAPHY OF SITE, DIRECTION OF DRAINAGE, LOCATION OF WELLS, STREAMS, LIMIT LINE OF 100 YEAR FLOOD PLAIN, EXISTING/PROPOSED SEWER, EXISTING & PROPOSED RECYCLED AND POTABLE WATER SYSTEMS.

LEGEND

(W)	POTABLE WATER METER
(R)	RECYCLED WATER METER
	BACKFLOW PREVENTION DEVICE INSTALL PER CMWD
—W—	POTABLE WATER LINE
—RW—	RECYCLED WATER LINE
—RC—	RECYCLED WATER PRESSURE SUPPLY LINE
—FS—	FIRE SERVICE LINE
	RECYCLED WATER USE AREA
△	DO NOT DRINK SIGN
	OUTDOOR EATING AREA (PROTECTED AGAINST CON–TACT WITH RECYCLED WATER)

INSPECTION PROCEDURES

1. CITY CONSTRUCTION INSPECTION SHALL INCLUDE:

   A. LOCATION OF PIPE LINES.
   B. TRENCH DEPTH.
   C. REQUIRED SEPARATION (HORIZONTALLY AND VERTICALLY).
   D. PIPE IDENTIFICATION.
   E. POINTS–OF–CONNECTION (POC'S).
   F. LOCATION AND IDENTIFICATION OF SPRINKLER HEADS.
   G. WARNING SIGNS AT THE SITE AND ON THE TRUCKS HAULING RECYCLED WATER (IF RECYCLED WATER IS USED FOR CONSTRUCTION).

   AN APPROVAL LETTER REGARDING THE INSPECTION OF THE PROJECT SHALL BE OBTAINED FROM THE CITY AND THE DISTRICT, AND BE FORWARDED TO THE COUNTY HEALTH DEPARTMENT PRIOR TO FINAL INSPECTION APPROVAL.

2. DISTRICT FINAL INSPECTION SHALL INCLUDE:

   A. COVERAGE TEST, AFTER COMPLETION OF THE SPRINKLER SYSTEM, TO DETERMINE THE ADEQUACY OF COVERAGE ON THE APPROVED USE AREA AND PROTECTION OF AREAS NOT APPROVED FOR RECEIVING RECYCLED WATER.
   B. WARNING SIGNS AND LABELS.
   C. QUICK COUPLING VALVES.
   D. ALL ASPECTS OF THE IRRIGATION CONDITIONS INCLUDING WINDBLOWN SPRAY, RUNOFF, AND PONDING.
   E. REQUIRED PROTECTION OF ALL RESIDENTIAL AREAS.
   F. REQUIRED PROTECTION OF WELL, STREAMS, RESERVOIRS, ETC.
   G. CROSS–CONNECTION.

3. ANNUAL INSPECTION SHALL INCLUDE:

   A COMPLETE INSPECTION WHICH SHOULD COVER PART A, PART B AND PART G OF THE DISTRICT FINAL INSPECTION.

   REVISIONS MUST BE APPROVED BY PUBLIC HEALTH ENGINEER, CITY ENGINEER & DISTRICT ENGINEER PRIOR TO IMPLEMENTATION IN FIELD.

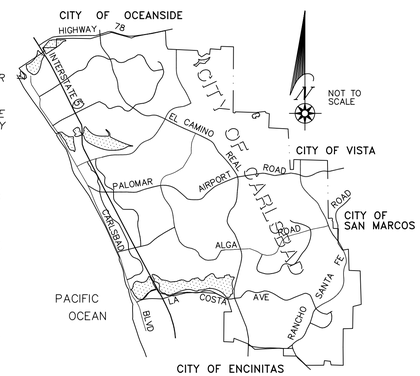

VICINITY MAP

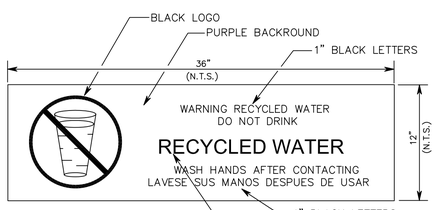

12" X 36" SIZE
.032 ALUMINUM, .060 ABS PLASTIC
OR STICK–ON VINYL SIGNS

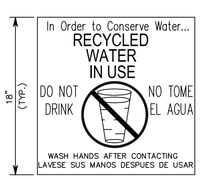

18" X 18" SIZE
.032 ALUMINUM, .060 ABS PLASTIC
OR STICK–ON VINYL SIGNS

TYPICAL SIGNS

DIGALERT
DIAL TOLL FREE
1 - 800 - 422 - 4133
AT LEAST TWO DAYS BEFORE YOU DIG
UNDERGROUND SERVICE ALERT OF SOUTHERN CALIFORNIA

ARCHITECT/ ENGINEERS STAMP SEAL
Expiration Date: _____

CARLSBAD MUNICIPAL WATER DISTRICT
WILLIAM E. PLUMMER DATE
DEPUTY CITY ENGINEER R.C.E.28176 EXP.3/31/10

SAN DIEGO COUNTY HEALTH DEPARTMENT
APPROVED BY: DATE

DEVELOPERS NAME: _____
ADDRESS: _____
TELEPHONE: _____
DATE PLAN PREPARED: _____
BY: _____

DATE	INITIAL	REVISION DESCRIPTION	DATE	INITIAL	DATE	INITIAL
ENGINEER OF WORK			OTHER APPROVAL		CITY APPROVAL	

COUNTY OF SAN DIEGO
DEPARTMENT OF ENVIRONMENTAL HEALTH
LAND AND WATER QUALITY DIVISION
GLENN LEEKS DATE
ENVIRONMENTAL HEALTH SPECIALIST

APPROVED
ENGINEERING PLANCHECKER DATE

"AS BUILT"
TITLE DATE

REVIEWED BY:
INSPECTOR DATE

CARLSBAD MUNICIPAL WATER DISTRICT
SHEET | CITY OF CARLSBAD PLANNING DEPARTMENT | SHEETS

PRIVATE (ONSITE) RECYCLED WATER SYSTEM FOR:

APPROVED
ASSISTANT PLANNING DIRECTOR DATE

DRWN BY: | PROJECT NO. | DRAWING NO.
CHCKD BY:

TYPICAL LANE AND SHOULDER CLOSURE

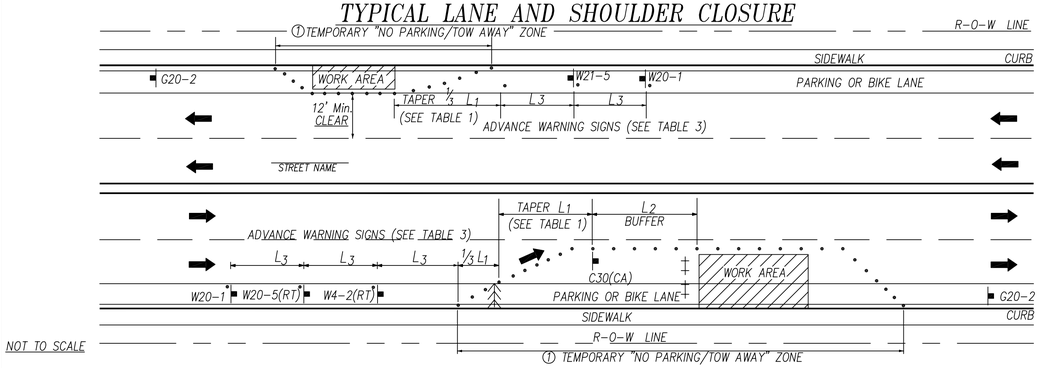

① IF OUTSIDE LANE IS A PARKING LANE THEN TEMPORARY "NO PARKING/TOW AWAY" SIGNS ARE TO BE POSTED PER TRAFFIC CONTROL NOTE 4.

TYPICAL CLOSING OF HALF ROADWAY

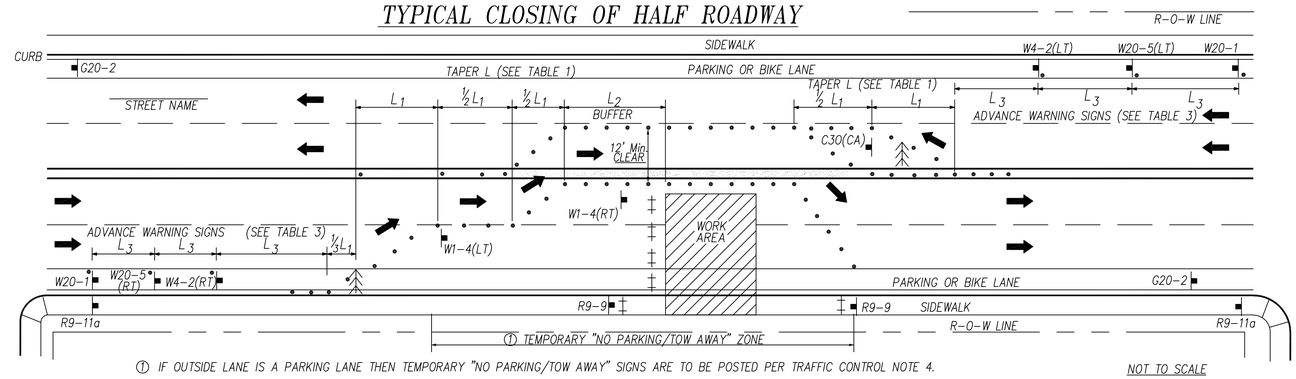

① IF OUTSIDE LANE IS A PARKING LANE THEN TEMPORARY "NO PARKING/TOW AWAY" SIGNS ARE TO BE POSTED PER TRAFFIC CONTROL NOTE 4.

TYPICAL LANE CLOSURE ON TWO-LANE ROAD USING FLAGGERS

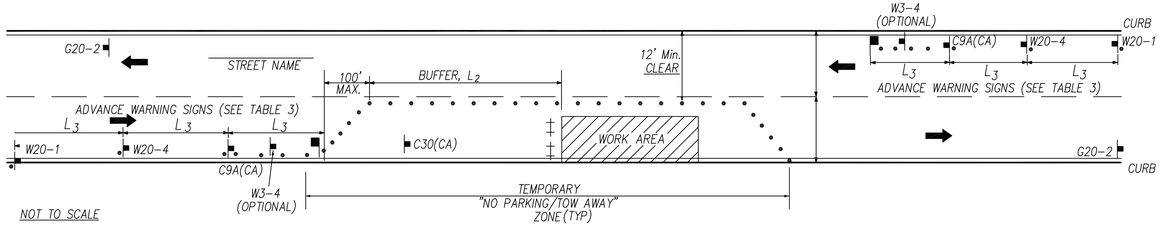

TYPICAL SIDEWALK CLOSURE

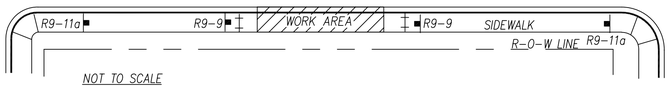

TRAFFIC CONTROL NOTES

1. WORK HOURS TO BE RESTRICTED TO_____ TO _____ UNLESS APPROVED OTHERWISE.
2. PEDESTRIAN CONTROLS WILL BE PROVIDED AS SHOWN.
3. PEDESTRIANS SHALL BE PROTECTED FROM ENTERING THE EXCAVATION BY PHYSICAL BARRIERS DESIGNED, INSTALLED, AND MAINTAINED TO THE SATISFACTION OF THE CITY ENGINEER.
4. TEMPORARY "NO PARKING/TOW AWAY" SIGNS STATING THE DATE AND TIME OF PROHIBITION WILL BE POSTED 72 HOURS PRIOR TO COMMENCING WORK. CALL CARLSBAD POLICE DISPATCH AT (760)931-2197 TO VALIDATE POSTING.
5. ACCESS WILL BE MAINTAINED TO ALL DRIVEWAYS UNLESS OTHER ARRANGEMENTS ARE MADE.
6. TRENCHES MUST BE BACKFILLED OR PLATED DURING NON-WORKING HOURS UNLESS K-RAIL BARRIERS ARE PROVIDED. K-RAIL IS APPROVED ONLY WHEN SPECIFICALLY SHOWN ON THE APPROVED TRAFFIC CONTROL PLAN. PLATES SHALL HAVE CLEATS AND COLD MIX AT THE EDGES AS APPROVED BY THE CITY INSPECTOR.
7. EXISTING STRIPING, CROSSWALKS, LEGENDS AND/OR PAVEMENT MARKERS SHALL BE REPLACED BY THE CONTRACTOR WITHIN 24 HOURS, IF REMOVED OR DAMAGED.
8. WORK THAT DISTURBS NORMAL TRAFFIC SIGNAL TIMING OPERATIONS SHALL BE COORDINATED WITH THE CITY OF CARLSBAD. CONTACT STREETS DIVISION AT (760) 434-2937 72 HOURS PRIOR TO COMMENCING WORK.
9. TRAFFIC SIGNALS SHALL REMAIN FULLY ACTUATED AT ALL TIMES, UNLESS OTHERWISE APPROVED BY THE CITY ENGINEER OR HIS REPRESENTATIVE. IF TRAFFIC SIGNAL LOOP DETECTORS ARE RENDERED INOPERATIVE BY THE PROPOSED WORK, VIDEO DETECTION SHALL BE USED TO PROVIDE ACTUATION.
10. FLAGGERS SHALL BE EQUIPPED WITH A WHITE HARD HAT, AN ORANGE VEST, AND A "STOP/SLOW" PADDLE ON A 5 FOOT STAFF.
11. ALL TRAFFIC CONTROL DEVICES MUST BE MAINTAINED 24 HOURS A DAY, 7 DAYS PER WEEK, BY THE CONTRACTOR.
12. ALL TRAFFIC CONTROL SHALL BE IN ACCORDANCE WITH THE CALIFORNIA MANUAL ON UNIFORM TRAFFIC CONTROL DEVICES (FHWA'S MUTCD 2003 REVISION1, AS AMENDED FOR USE IN CALIFORNIA).
13. TRAFFIC CONTROL PLAN SUBMITTALS ARE REQUIRED FOR EACH PHASE OF THE WORK IN THE DETAIL, FORMAT, AND QUALITY ILLUSTRATED ON THIS SHEET.
14. ALL TRAFFIC CONTROL DEVICES SHALL BE REMOVED FROM VIEW OR COVERED WHEN NOT IN USE.
15. THE CITY ENGINEER OR HIS REPRESENTATIVE HAS THE AUTHORITY TO INITIATE FIELD CHANGES TO INSURE PUBLIC SAFETY.
16. ALL WORK AFFECTING BUS STOPS SHALL BE COORDINATED WITH NORTH COUNTY TRANSIT DISTRICT. CONTRACTOR SHALL CALL NCTD AT (760) 967-2828 AT LEAST 72 HOURS IN ADVANCE OF STARTING WORK.
17. CHANGEABLE MESSAGE SIGNS SHALL BE USED IN ADVANCE OF TRAFFIC CONTROL ON MAJOR AND PRIME ARTERIALS, UNLESS OTHERWISE APPROVED. THESE SIGNS SHALL BE SHOWN ON THE TRAFFIC CONTROL PLAN.

SIGNAGE NOTES

1. AT LEAST ONE PERSON SHALL BE ASSIGNED TO FULL TIME MAINTENANCE OF TRAFFIC CONTROL DEVICES ON ALL NIGHT LANE CLOSURES.
2. ALL WARNING SIGNS FOR NIGHT LANE CLOSURES SHALL BE ILLUMINATED OR REFLECTORIZED AS SPECIFIED IN THE SPECIFICATIONS.
3. ALL ADVANCE WARNING SIGN INSTALLATIONS SHALL BE EQUIPPED WITH FLAGS FOR DAYTIME CLOSURES OF ALL MAJOR AND PRIME ARTERIALS. FLASHING BEACONS SHALL BE USED DURING NIGHT LANE CLOSURES.
4. A G20-2 "END ROAD WORK" SIGN SHALL BE PLACED AT THE END OF THE LANE CLOSURE UNLESS THE END OF THE WORK AREA IS OBVIOUS, OR ENDS WITHIN A LARGER PROJECT LIMITS.
5. ALL CONES USED FOR NIGHT LANE CLOSURES SHALL BE ILLUMINATED TRAFFIC CONES OR FITTED WITH 13" REFLECTIVE SLEEVES.
6. FLASHING ARROW SIGNS SHALL BE USED PER THE CALIFORNIA MANUAL ON UNIFORM TRAFFIC CONTROL DEVICES (FHWA'S MUTCD 2003 REVISION1, AS AMENDED FOR USE IN CALIFORNIA). SILENT TYPE SHALL BE USED IN RESIDENTIAL AREAS.
7. THE MAXIMUM SPACING BETWEEN CONES IN A TAPER OR A TANGENT SHALL BE APPROXIMATELY AS SHOWN IN TABLE 1.
8. ADDITIONAL ADVANCE FLAGGERS SHALL BE REQUIRED WHEN TRAFFIC QUEUES DEVELOP. FLAGGER STATIONS FOR WORK AT NIGHT SHALL BE ILLUMINATED AS NOTED IN SECTION 6G.20 OF THE MUTCD.
9. PLACE C30 (CA) "LANE CLOSED" SIGN AT 500'-1000' INTERVALS THROUGHOUT EXTENDED WORK AREAS.
10. ALL REQUIRED SIGNS THAT ARE TO BE LEFT IN PLACE OVER A WEEKEND OR HOLIDAY SHALL BE POST MOUNTED USING SQUARE PERFORATED STEEL TUBING WITH BREAKAWAY BASE PER SDRSD M-45.
11. CONSTRUCTION AREA TRAFFIC CONTROL DEVICES SHALL MEET THE PROVISIONS OF SECTION 12 OF THE MOST RECENT EDITION OF THE CALTRANS STANDARD SPECIFICATIONS.

SIGNS

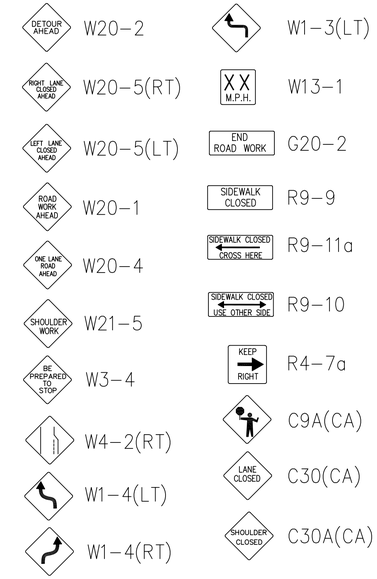

TABLE 3: SIGN SPACING, L_3

APPROACH SPEED (M.P.H.)	MINIMUM DISTANCE IN FEET L_3	
	BETWEEN SIGNS *	FROM LAST * SIGN TO TAPER
LESS THAN 25	100'	100'
25 TO 40	350'	350'
GREATER THAN 40	500'	500'

* EXACT SPACING MAY VARY DUE TO FIELD CONDITIONS

TABLE 1: TAPER LENGTHS, L_1

APPROACH SPEED (M.P.H.)	MINIMUM TAPER LENGTH L_1 *	MINIMUM NUMBER OF CONES FOR TAPER *	MAXIMUM SPACING OF CONES ALONG TAPER (FEET) ±	MAXIMUM SPACING OF CONES ALONG TANGENT (FEET) ±
25	125	6	25	50
30	180	7	30	60
35	245	8	35	70
40	320	9	40	80
45	540	13	45	90
50	600	13	50	100
55	660	13	55	110
60	720	13	60	120

* BASED ON 12 FOOT WIDE LANE. THIS COLUMN IS ALSO APPROPRIATE FOR LANE WIDTHS LESS THAN 12 FEET.

TABLE 2: BUFFER SPACE, L_2

APPROACH SPEED (M.P.H.)	LONGITUDINAL BUFFER SPACE L_2 (FEET)±*
25	155
30	200
35	250
40	305
45	360
50	425
55	495
60	570

* SEE CA MUTCD TABLE 6E-101(CA) FOR SUSTAINED DOWNGRADES STEEPER THAN 3% AND LONGER THAN 1 MILE.

LEGEND

- DIRECTION OF TRAVEL
- PORTABLE SIGN
- TRAFFIC CONE/DELINEATOR
- TYPE II BARRICADE
- FLAGGER
- FLAG TREE
- FLASHING ARROW SIGN
- PORTABLE FLASHING BEACON (SEE SIGNAGE NOTE #3)
- K-RAIL (TYPE 50 CONCRETE BARRIER)
- CMS — CHANGEABLE MESSAGE SIGN

DETAIL

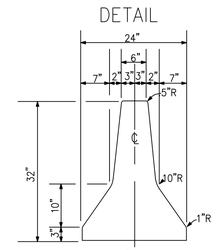

K-RAIL
(CONCRETE BARRIER TYPE 50)

ENGINEERS SEAL

DRAWN BY: _____
DATE: _____
RCE. _____ EXP. _____

SHEET | CITY OF CARLSBAD ENGINEERING DEPARTMENT | SHEETS

TRAFFIC CONTROL PLAN FOR:

NOTES AND DETAILS

APPROVED: DAVID A. HAUSER

DEPUTY CITY ENGINEER PE 33081 EXPIRES 6/30/08 DATE

DWN BY: _____
CHKD BY: _____
RVWD BY: _____

PROJECT NO. | DRAWING NO.

CITY OF CARLSBAD
APPROVED

for TRAFFIC ENGINEER DATE

CITY OF CARLSBAD
ENGINEERING STANDARDS

VOLUME 3 – STANDARD DRAWINGS AND SPECIFICATIONS

CHAPTER 4 – POTABLE & RECYCLED WATER STANDARD DRAWINGS

TABLE OF CONTENTS

DWG NO.

W-1 ..... Standard Symbols for improvement Plans

W-2 ..... Typical Trench Section

W-3 ..... 1” Water Service Connection for 5/8”,3/4” & 1” Meters

W-3A ..... 1” Water Service Connection for Domestic Service With Fire Sprinkler

W-4 ..... 2” Water Service Connection for 1 1/2” & 2” Meters

W-5 ..... 1” Manual Air Release Assembly

W-6 ..... 2” Blow-Off / Manual Air Release Assemblies

W-7 ..... Above Surface 2” Air Vacuum Valve Assembly & Appurtenance

W-8 ..... Outlets on A.C. or P.V.C. Main for 1” thru 2” Assemblies

W-9 ..... Outlets on D.I. or Steel main for 1” thru 2” Assemblies

W-10 ..... Dielectric Connection to Steel Main

W-11 ..... 6” Blow-Off Assembly (Ductile Iron)

W-11A ..... 6” Blow-Off Assembly (Steel)

W-12 ..... Fire Hydrant Assembly

W-13 ..... Valve Box Assembly

W-14 ..... Tapped Connection to Steel Main

W-15 ..... Concrete Thrust Blocks for Non-Restrained Joints

W-16 ..... Gate Valve Installation P.V.C., D.I.P., A.C.P. & STEEL PIPE

W-17 ..... Butterfly & Plug Valve Installation for P.V.C.

W-18 ..... Thrust Anchor for Water Main Reducer – 4” thru 16”

W-19 ..... Thrust Block Bearing Areas – 4” thru 16”

W-20 ..... 2” and Under Backflow Installation

W-21 ..... 3” and Above Backflow Installation

W-22 ..... Above Ground Double Check Valve Detector Assembly

W-23 ..... Extension Stem and Marker Post

POTABLE AND RECYCLED WATER STANDARD DRAWINGS

TABLE OF CONTENTS (CON'T)

W-24 ..... Protection Post
W-25 ..... Zinc Anode and Connectors for 1" & 2" Water Service
W-26 ..... At Grade 2-Wire Test Station with Anodes
W-27 ..... Exothermic Weld Process
W-28 ..... 2-Wire Test Station with Anodes Wiring Diagram
W-29 ..... Magnesium Anode
W-30 ..... Concrete Test Box
W-31 ..... Buried Insulating Flange
W-32 ..... Mechanical Joint Bond
W-33 ..... 4" Air Vacuum Valve Assembly & Appurtenance
W-34 ..... Welded Steel Pipe Section with Thrust Walls for Slopes and Dips
W-35 ..... Bypass Tee for Recycled Water Testing **(NEW 2/21/12)**

DESCRIPTION	ABREVIATION	C.M.W.D. DWG. NO.	SYMBOL
WATER PIPELINE (Size Per Plan)	W	None	W
RECYCLED WATER PIPELINE (Size Per Plan)	RW	None	RW
WATER GATE VALVE & WATER BUTTERFLY VALVE	GV BFV	W-16 W-17	
BLOW-OFF ASSEMBLY	BO	W-6	
MANUAL AIR RELEASE ASSEMBLY	MAR	W-6	
AIR VACUUM ASSEMBLY	AVA	W-7	
DETECTOR CHECK VALVE ASSEMBLY	DDCV	W-22	
IRRIGATION SERVICE (2" unless shown otherwise)	IR	W-4	IR
WATER SERVICE (1" unless shown otherwise)	W	W-3	W
WATER SERVICE WITH FIRE SPRINKLER (1" unless shown otherwise)	W/F	W-3A	WF
FIRE HYDRANT	FH	W-12	
END CAP ASSEMBLY WITH TRHUST BLOCK		W-15	
CATHODIC TEST STATION	CT	W-26 through W-32	CT

REV.	APPROVED	DATE	CARLSBAD MUNICIPAL WATER DISTRICT	
			STANDARD SYMBOLS FOR IMPROVEMENT PLANS	Robert T. Johnson Jr. 7/10/08 CITY ENGINEER DATE
				STANDARD DWG. NO. W-1

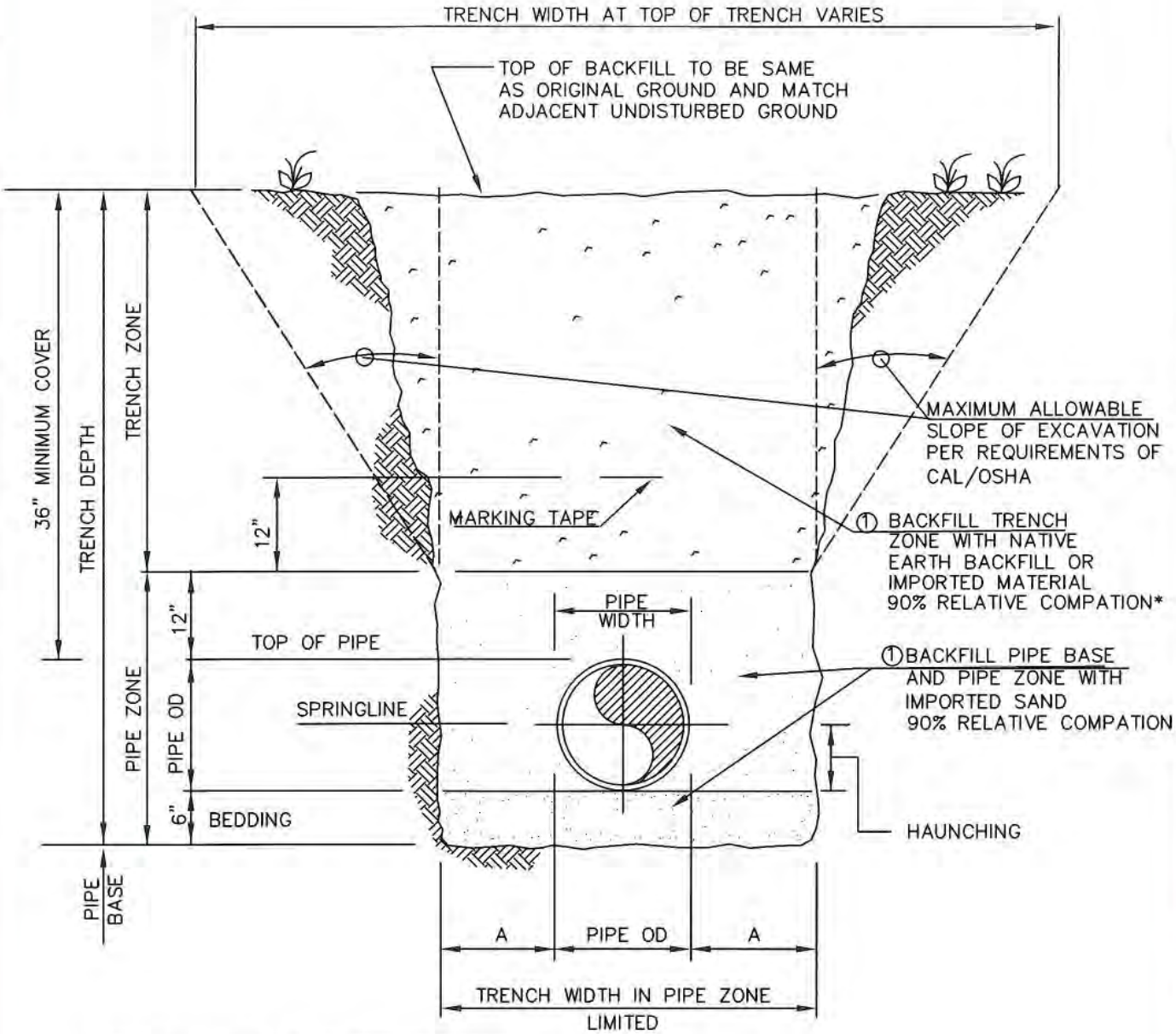

	PIPE DIAMETER	MIN.	MAX.
A	1" THROUGH 8"	6"	9"
	10" THROUGH 16"	8"	12"
	18" THROUGH 24"	10"	18"
	27" THROUGH 36"	12"	24"

*IN PAVED AREA, TRENCH ZONE SHALL BE COMPACTED TO 95% MIN.

NO SCALE

ITEM	DESCRIPTION	SPEC/DWG
1	BEDDING AND BACKFILL MATERIAL	SECT 02223

REV.	APPROVED	DATE	CARLSBAD MUNICIPAL WATER DISTRICT	Robert T. Johnson Jr. 7/10/08
			TYPICAL TRENCH SECTION	CITY ENGINEER DATE
				STANDARD DWG. NO. W-2

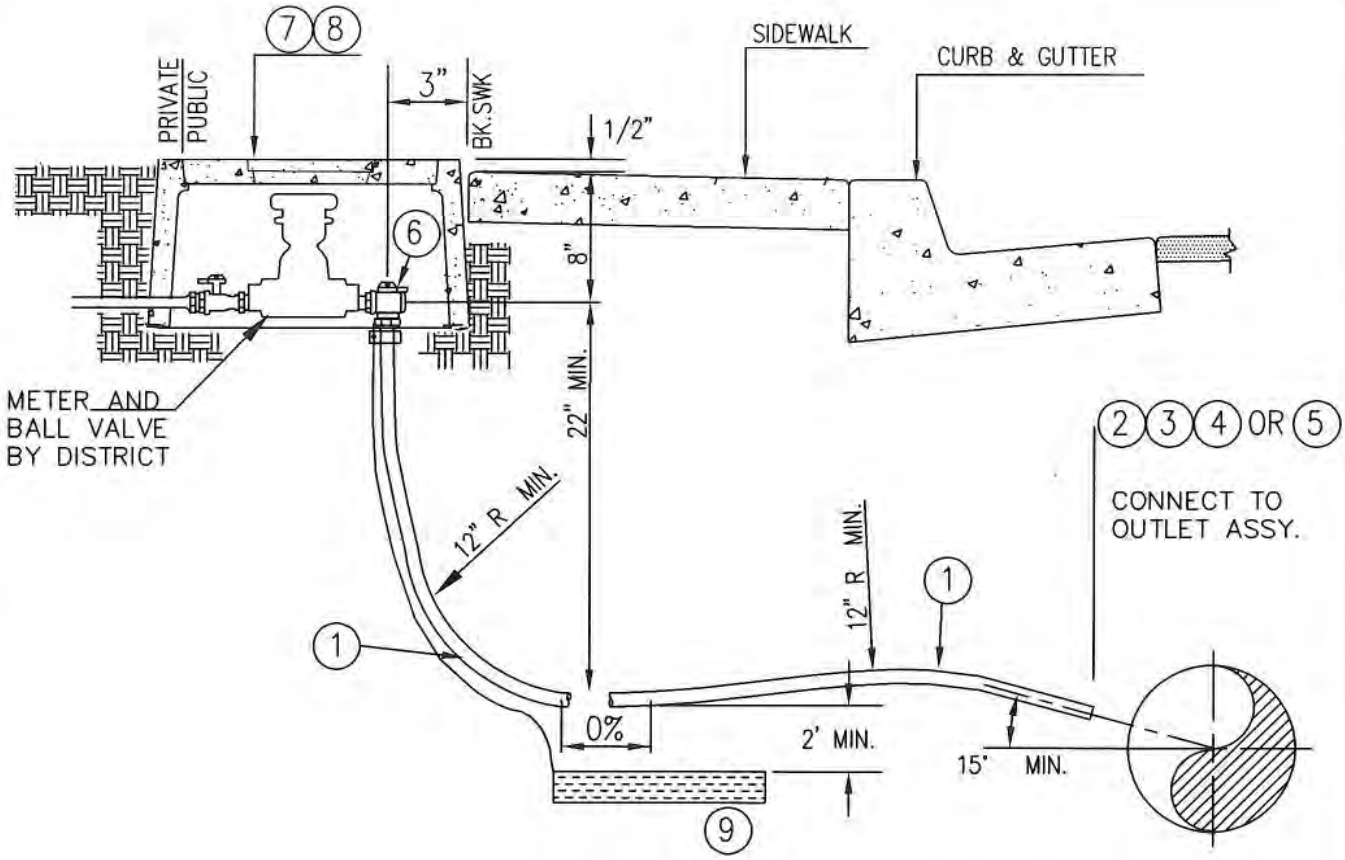

NOTES:

1. CONTRACTOR SHALL ADJUST ANGLE VALVE & METER BOX TO F.G. AFTER SIDEWALK IS INSTALLED & APPROVED
2. DISTRICT WILL SET METER AND BALL VALVE
3. ALL COPPER JIONTS SHALL BE SILVER SOLDERED IN CONFORMANCE WITH SPECIFICATIONS.
4. TAP TO MAIN TO BE MINIMUM OF 24" FROM NEAREST COUPLING, FITTING, VALVE, BELL OR OTHER TAPS.
5. POSITON ANODE MIDWAY BETWEEN PIPELINE AND METER BOX.
6. INTERIOR OF METER BOX SHALL BE CLEAR OF DEBRIS TO DEPTH OF 12" AND CORP STOP FULLY EXPOSED

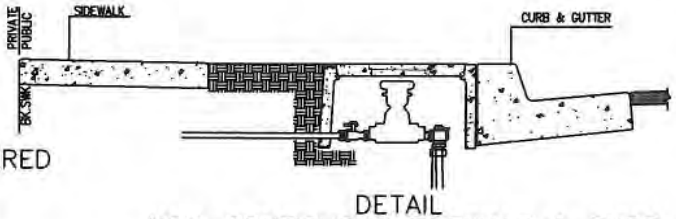

DETAIL
NON-CONTIGUOUS SIDEWALK & CURB

ITEM	DESCRIPTION	SPEC/DWG
1	COPPER, (TYPE 'K' , SOFT)	
2	OUTLET ON PVC PRESSURE PIPE	
3	OUTLET ON AC PIPE	W-8
4	OUTLET ON CML&C STEEL PIPE	W-9
5	OUTLET ON DUCTILE IRON PIPE	W-9
6	1" ANGLE METER STOP	
7	METER BOX AND COVER (TRAFFIC AREA)	
8	METER BOX AND COVER (NON-TRAFFIC AREA)	
9	30 LB. ZINC ANODE WITH ANODE LEAD WIRE	W-25

REV.	APPROVED	DATE	CARLSBAD MUNICIPAL WATER DISTRICT	Robert T. Johnson Jr. 7/10/08
			1" WATER SERVICE CONNECTION FOR 5/8", 3/4" & 1" METERS	CITY ENGINEER DATE
				STANDARD DWG. NO. W-3

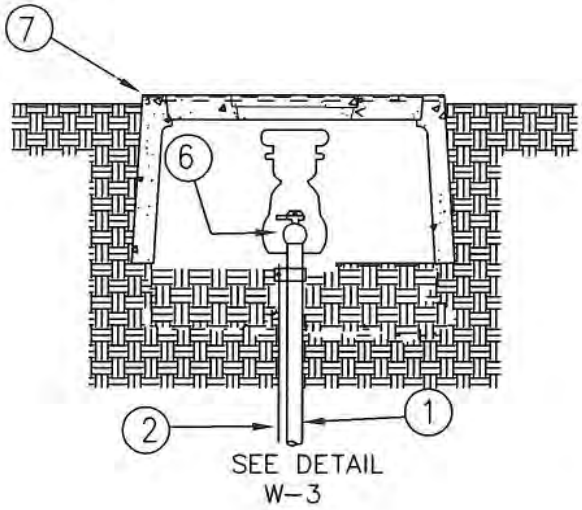

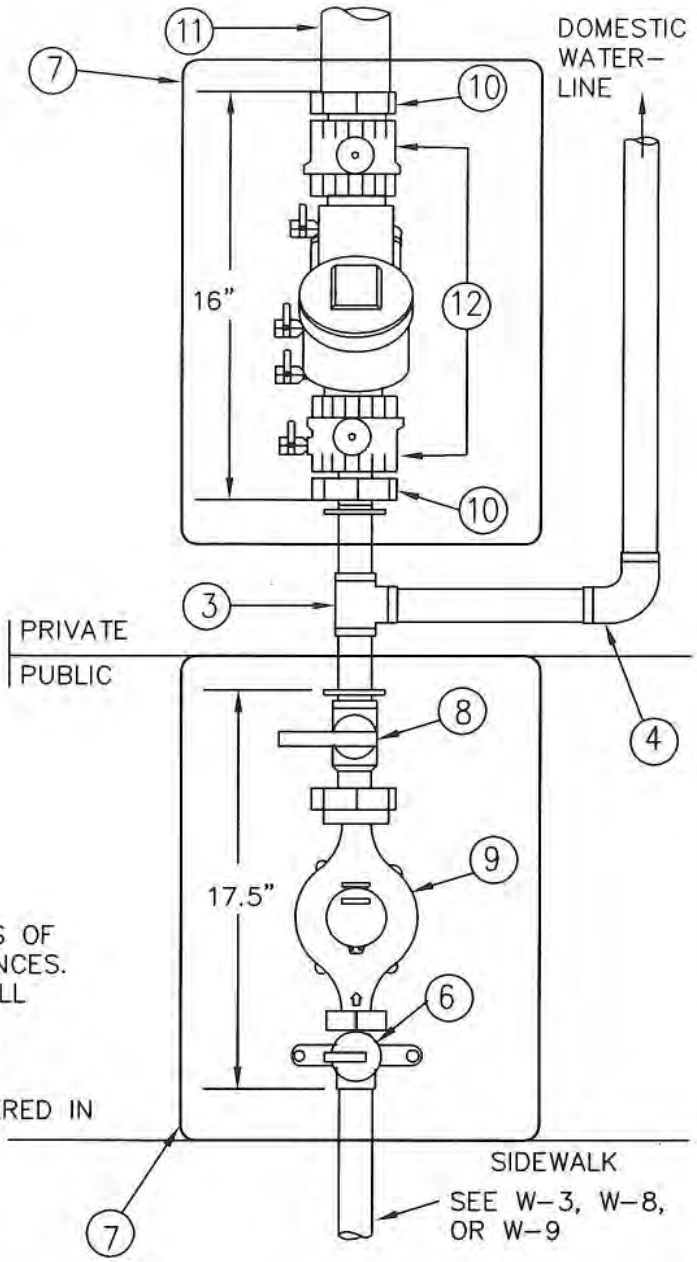

NOTES:
1. REFER TO DRAWING W-3 FOR SPECIFICATIONS OF INSTALLATION OF SERVICE LINE AND APPURTENANCES.
2. DISTRICT TO SET METER AND BALL VALVE, ALL OTHERS TO BE INSTALLED BY CONTRACTOR.
3. DOMESTIC WATER LINE MATERIAL WILL BE IN CONFORMANCE TO CODE.
4. ALL COPPER JOINTS SHALL BE SILVER SOLDERED IN CONFORMANCE WITH SPECIFICATIONS.

ITEM	DESCRIPTION	SPEC/DWG
1	COPPER, [TYPE 'K' , SOFT]	
2	30 LB. ZINC ANODE LEAD WIRE	
3	1" COPPER TEE (SILVER SOLDER)	
4	1" 90° COPPER BEND (SILVER SOLDER)	
5	NOT USED	
6	1" ANGLE METER STOP	
7	#37 ARMORCAST METER BOX (OR EQUIVALENT)	
8	1" BALL VALVE	
9	1" WATER METER BY DISTRICT	
10	BRASS UNION	
11	2" FIRE SYSTEM WATER LINE(SIZE TO BE APPROVED BY FIRE MARSHAL)	
12	1" DOUBLE CHECK VALVE WITH SHUT OFF VALVES	

REV.	APPROVED	DATE	CARLSBAD MUNICIPAL WATER DISTRICT	
			1" DOMESTIC WATER SERVICE CONNECTION WITH FIRE SPRINKLER SYSTEM	Robert T. Johnson Jr. 7/10/08 CITY ENGINEER DATE
				STANDARD DWG. NO. W-3A

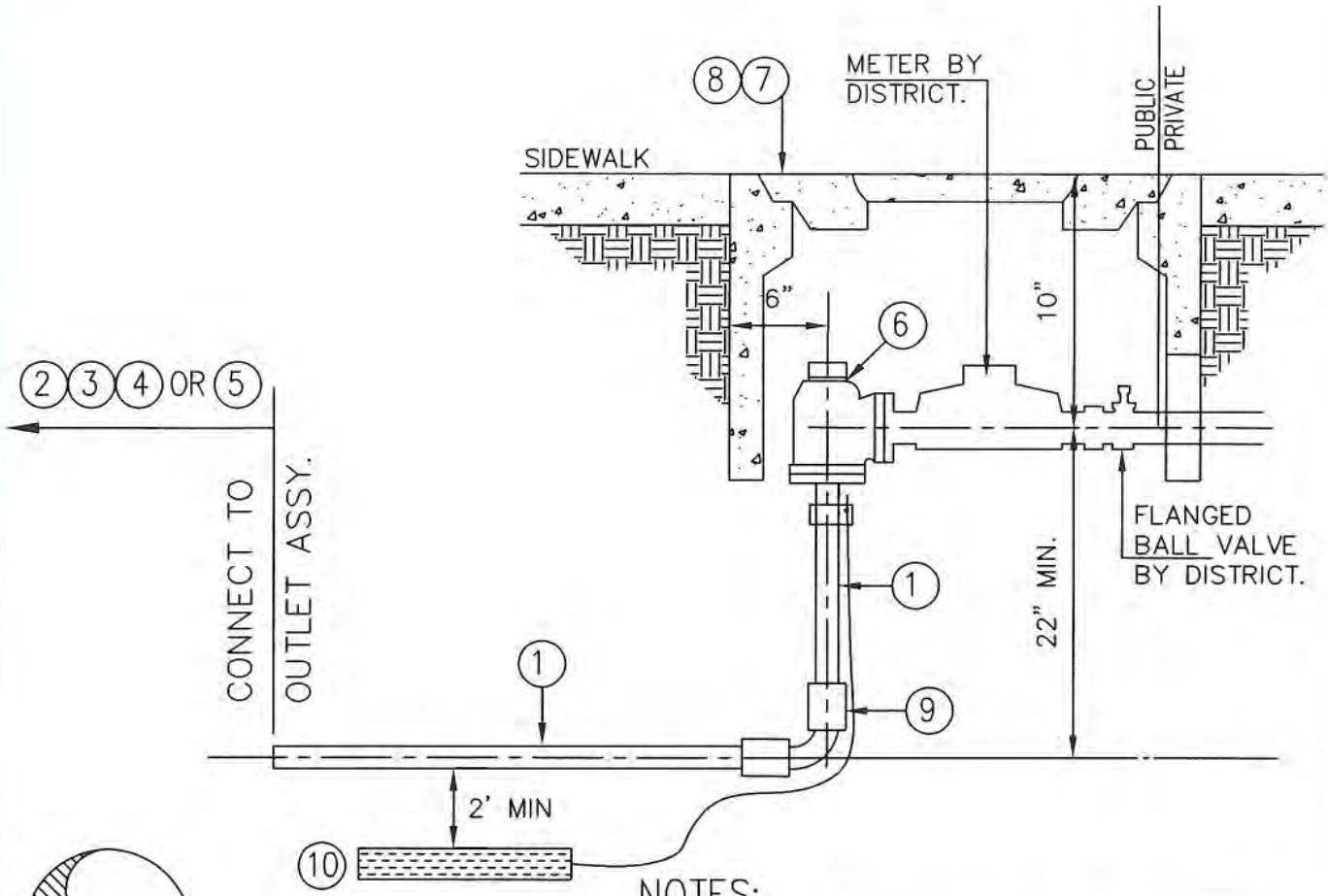

NOTES:

1. DISTRICT WILL SET METER AND BALL VALVE
2. ALL COPPER JIONTS SHALL BE SILVER SOLDERED IN CONFORMANCE WITH SPECIFICATIONS.
3. TAP TO MAIN TO BE MINIMUM OF 18" FROM NEAREST COUPLING OF TAP.
4. POSITION ANODE MIDWAY BETWEEN PIPELINE AND METER BOX.
5. FOR NON-CONTIGUOUS SIDEWALK SEE DETAIL DRAWING W3.

ITEM	DESCRIPTION	SPEC/DWG
1	2" COPPER SERVICE PIPE	
2	OUTLET ON PVC PRESSURE PIPE	W-8
3	OUTLET ON ACP PIPE	W-8
4	OUTLET ON CML&C STEEL PIPE	W-9
5	OUTLET ON DUCTILE IRON PIPE	W-9
6	2" ANGLE METER STOP	
7	METER BOX AND COVER (TRAFFIC AREA)	
8	METER BOX AND COVER (NON-TRAFFIC AREA)	
9	2" C X C 90° ELL (SILVER SOLDERED).	
10	30 LB. ZINC ANODE WITH ANODE LEAD WIRE	W-25

REV.	APPROVED	DATE	CARLSBAD MUNICIPAL WATER DISTRICT	
			2" WATER SERVICE CONNECTION FOR 1 1/2" & 2" METERS	Robert T. Johnson Jr. 7/10/08 CITY ENGINEER DATE
				STANDARD DWG. NO. W-4

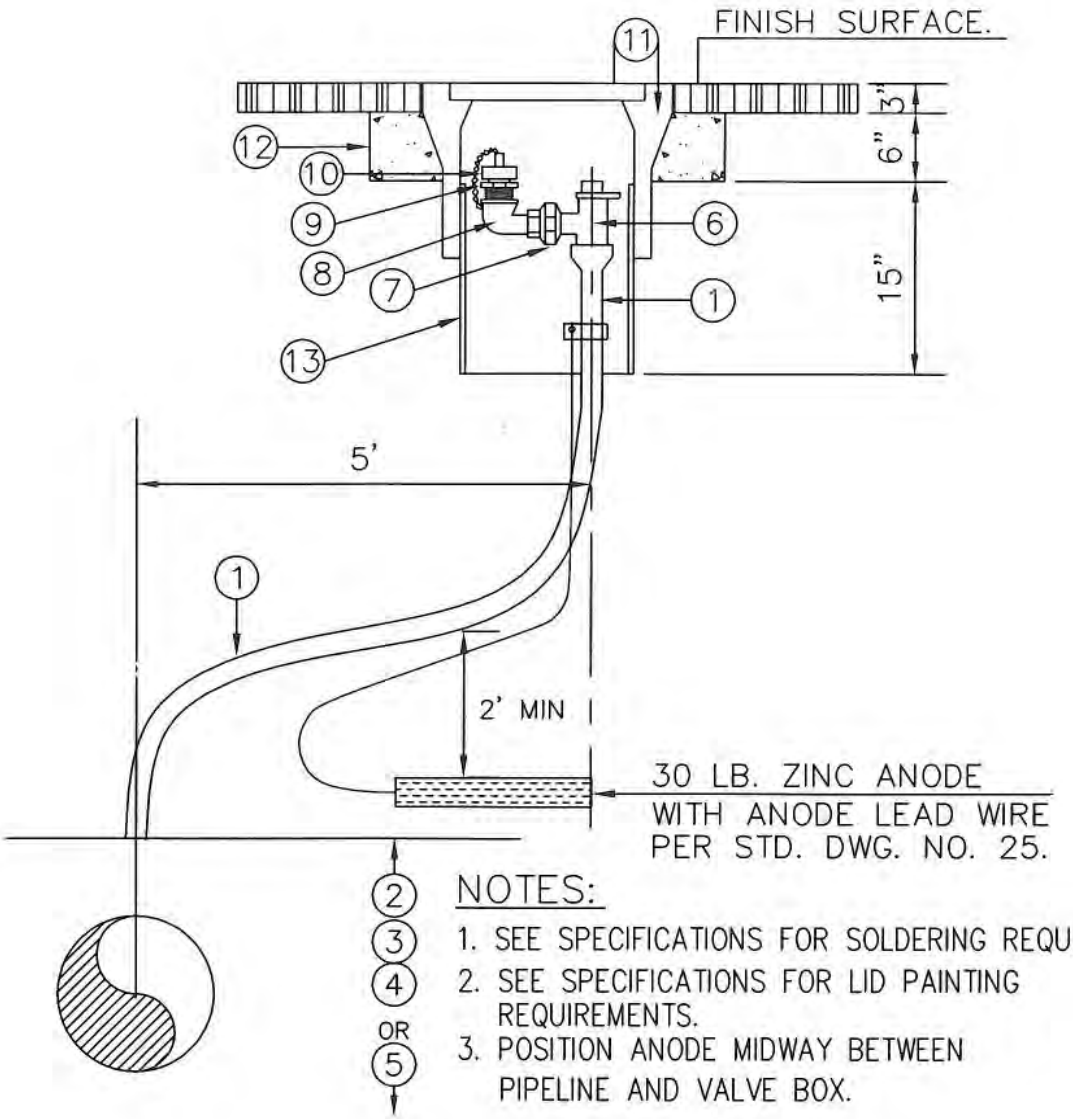

NOTES:

1. SEE SPECIFICATIONS FOR SOLDERING REQUIREMENTS
2. SEE SPECIFICATIONS FOR LID PAINTING REQUIREMENTS.
3. POSITION ANODE MIDWAY BETWEEN PIPELINE AND VALVE BOX.

ITEM	DESCRIPTION	SPEC/DWG
1	1" TYPE "K" SOFT COPPER	
2	OUTLET ON PVC PRESSURE PIPE.	W-8
3	OUTLET ON AC PIPE.	W-8
4	OUTLET ON CML&C STEEL PIPE.	W-9
5	OUTLET ON DUCTILE IRON PIPE.	W-9
6	1" ANGLE METER STOP	
7	1 1/4" X 1" BRASS BUSHING.	
8	1" BRASS STREET ELL.	
9	1" ADAPTER M.I.P. X N.S.HT	
10	HOSE THREAD CAP	
11	VALVE BOX/LID	W-13
12	CONCRETE COLLAR	
13	8" PVC, C900	

REV.	APPROVED	DATE	CARLSBAD MUNICIPAL WATER DISTRICT	Robert T. Johnson Jr. 7/10/08
			1" MANUAL AIR RELEASE ASSEMBLY	CITY ENGINEER DATE
				STANDARD DWG. NO. W-5

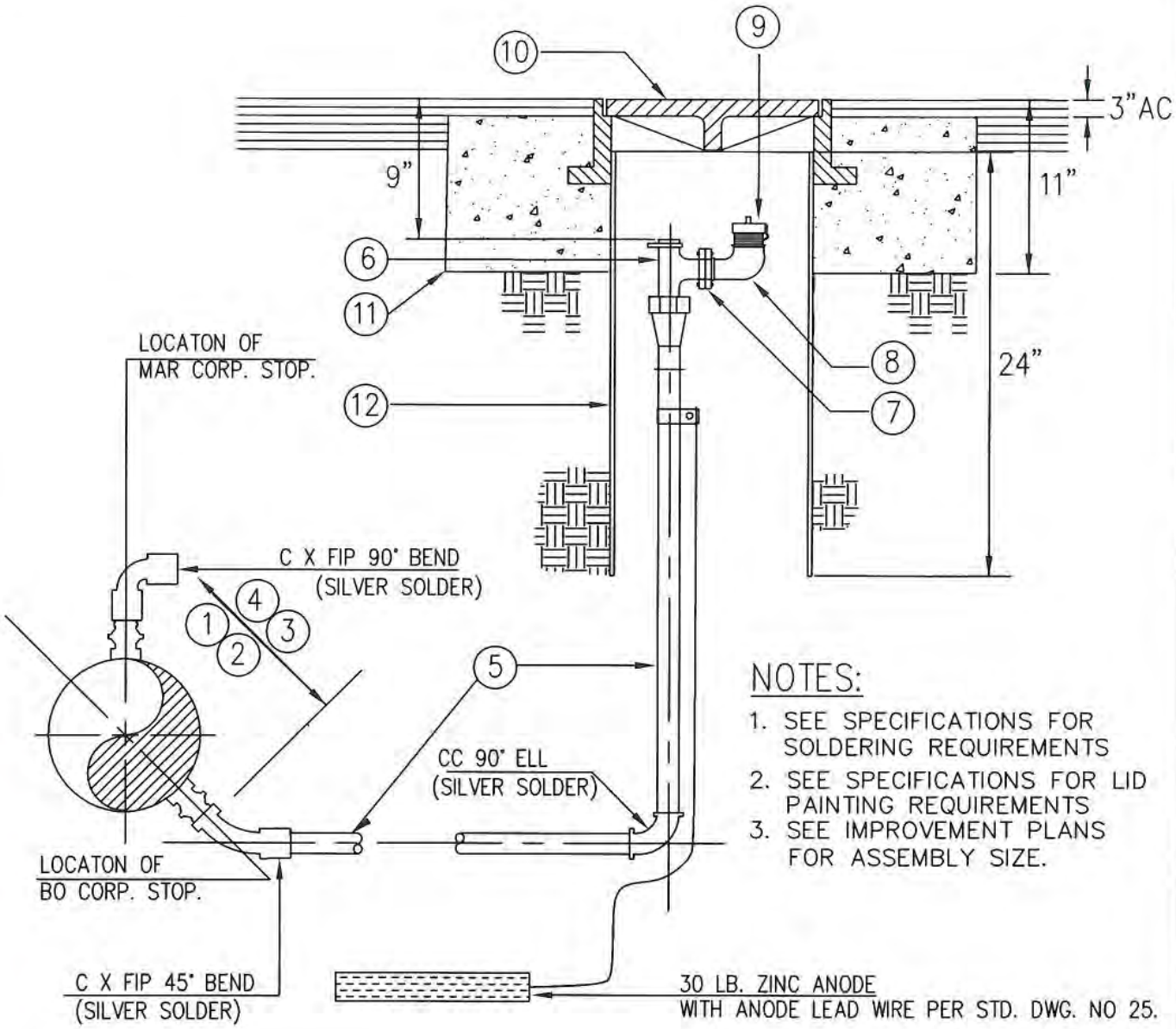

NOTES:

1. SEE SPECIFICATIONS FOR SOLDERING REQUIREMENTS
2. SEE SPECIFICATIONS FOR LID PAINTING REQUIREMENTS
3. SEE IMPROVEMENT PLANS FOR ASSEMBLY SIZE.

ITEM	DESCRIPTION	SPEC/DWG
1	OUTLET ON PVC PRESURE PIPE	W-8
2	OUTLET ON AC PIPE	W-8
3	OUTLET ON CML&C STEEL PIPE	W-9
4	OUTLET ON DUCTILE IRON PIPE	W-9
5	2" COPPER SERVICE PIPE. (TYPE 'K' SOFT).	
6	2" ANGLE METER STOP	
7	2" METER COMPANION FLANGE. (BRASS NUTS AND BOLTS).	
8	2" BRASS STREET ELL	
9	ADAPTER-2" M.I.P. X 2 1/2" NSHT W/ 2 1/2" CAP	
10	12" DIA. C.I. VALVE BOX COVER MARKED WATER OR RECYCLED WATER	
11	30" DIAMETER X 8" THICK CONCRETE RING	
12	12" GRAVITY SEWER PIPE SDR 35	

REV.	APPROVED	DATE	CARLSBAD MUNICIPAL WATER DISTRICT	
			2" BLOW-OFF / MANUAL AIR RELEASE ASSEMBLIES	Robert T. Johnson Jr. 7/10/08 CITY ENGINEER DATE
				STANDARD DWG. NO. W-6

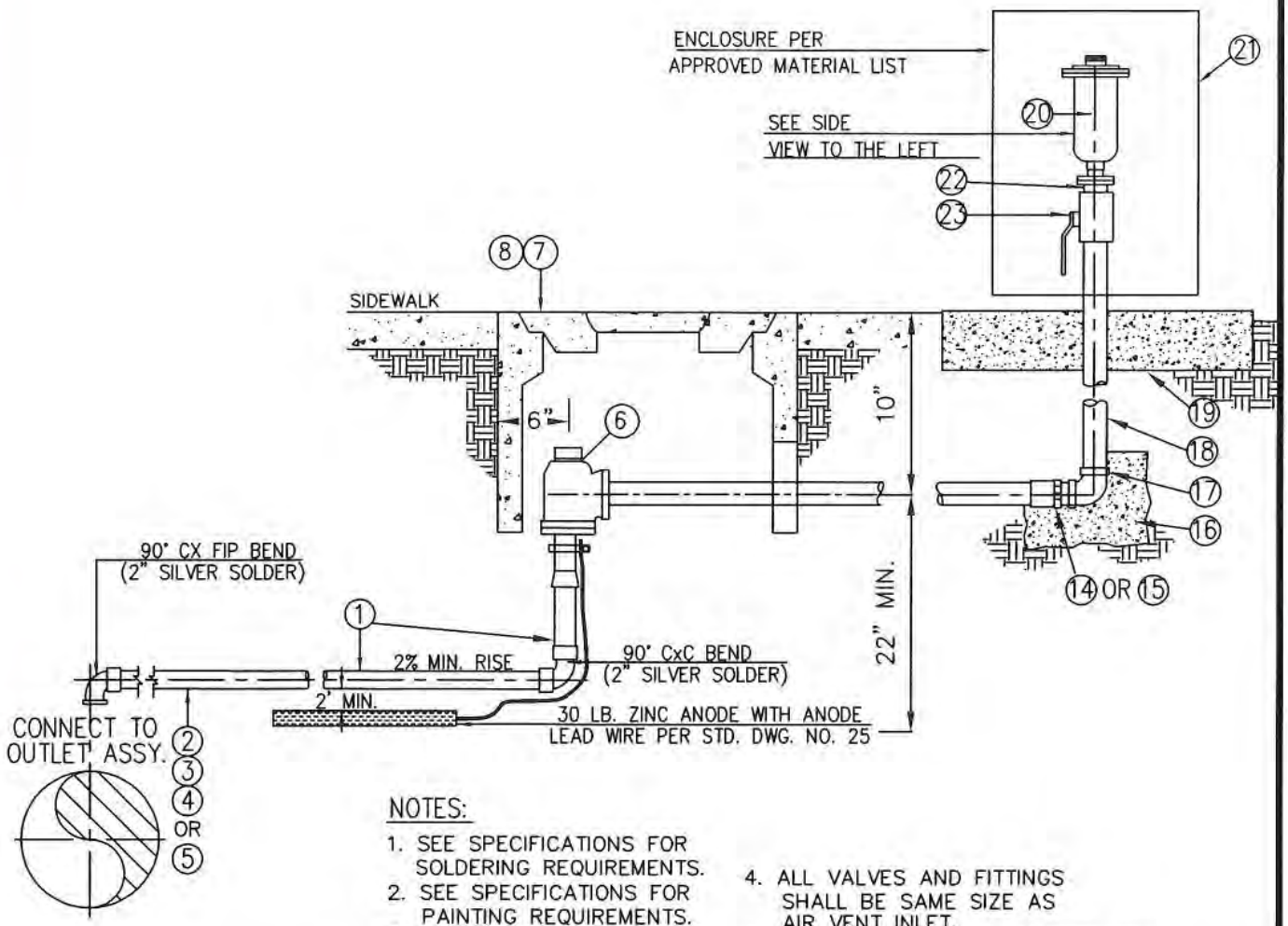

NOTES:

1. SEE SPECIFICATIONS FOR SOLDERING REQUIREMENTS.
2. SEE SPECIFICATIONS FOR PAINTING REQUIREMENTS.
3. SEE IMPROVEMENT PLANS FOR ASSEMBLY SIZE.
4. ALL VALVES AND FITTINGS SHALL BE SAME SIZE AS AIR VENT INLET.
5. POSITON ANODE MIDWAY BETWEEN PIPELINE AND VALVE BOX.

ITEM	DESCRIPTION	SPEC/DWG	ITEM	DESCRIPTION	SPEC/DWG
1	1" COPPER, (TYPE 'K' , SOFT), 2" COPPER SER. PIPE. (TYPE "K" SOFT)		14	2" COPPER ADATER, COPPER SOLDER JOINT x MALE IPT, 0–300 PSI	
2	OUTLET ON PVC PRESSURE PIPE	W–8			
3	OUTLET ON AC PIPE	W–8	15	2" FLARED TUBE STR CPLG, COPPER x MALE IPT, 0–150 PSI	
4	OUTLET ON CML&C STEEL PIPE	W–9			
5	OUTLET ON DUCTILE IRON PIPE	W–9	16	CONCRETE ANCHOR BLOCK WITH 2 CUBIC FEET	
6	1" OR 2" ANGLE METER STOP				
7	METER BOX & COVER (TRAFFIC AREA)		17	2" CL 125 CAST BRONZE 90° ELBOW WITH FEMALE IPT	
8	METER BOX & COVER (NONTRAFFIC AREA)		18	2" BRASS PIPE, REGULAR WALL WITH MALE IPT	
9	1" OR 2" HEAVY DUTY		19	30"x30"x6" CONCRETE PAD	
10	COMBINATION AIR RELEASE. 1" OR 2" BRASS STREET "L"		20	2" COMB. AIR RELEASE AND VACUUM VALVE, FEMALE IPT	
11	1" OR 2" X 6" BRASS NIPPLE		21	AVE ASSEMBLY ENCLOSURE	
12	1" OR 2" SCHEDULE 40 PVC				
13	BRASS METER COMPANION FLANGE. (BRASS NUTS AND BOLTS ON 2")		22	1" OR 2" METER STOP	
			23	2" BRONZE BALL VALVE	

REV.	APPROVED	DATE	CARLSBAD MUNICIPAL WATER DISTRICT	
			ABOVE SURFACE 1 & 2" AIR-VACUUM VALVE ASSEMBLY & APPURTENANCE	Robert T. Johnson 7/10/08 CITY ENGINEER DATE
				STANDARD DWG. NO. W-7

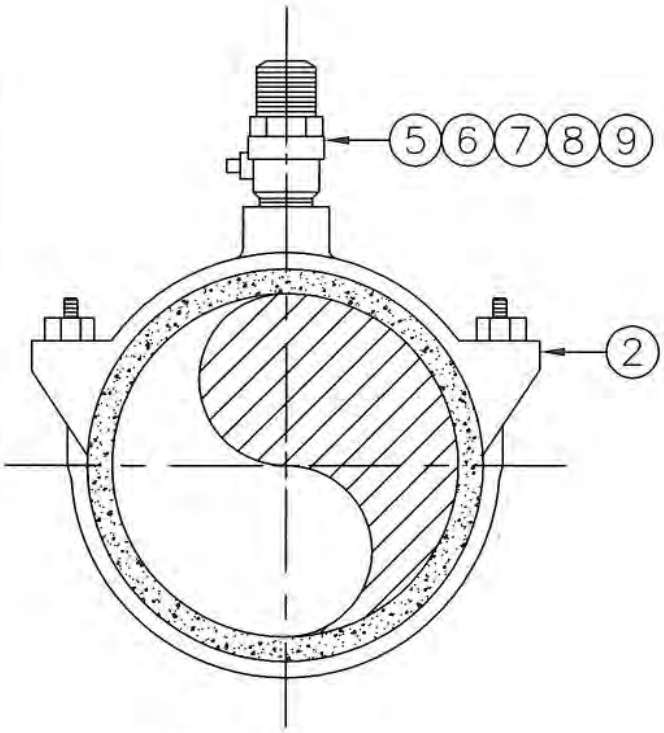

A.C. MAIN

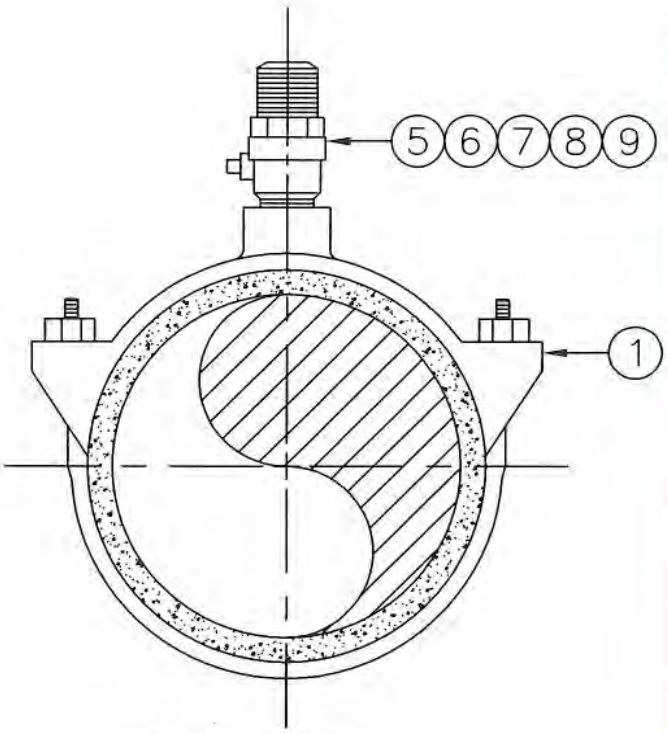

P.V.C. MAIN

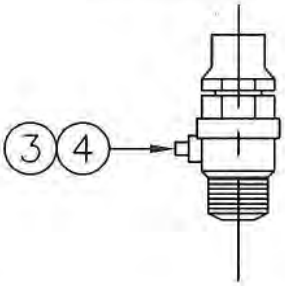

FOR WATER SERVICE CONNECTION (TYP.)

ITEM	DESCRIPTION	SPEC/DWG
1	DOUBLE BAND BRASS SERVICE SADDLE.	
2	BRONZE DOUBLE STRAP SERVICE SADDLE.	
3	CORP. STOP 1" WATER SERVICE.	W-3
4	CORP. STOP 2" WATER SERVICE.	W-4
5	CORP. STOP 1" AIR VACUUM VALVE ASSEMBLY.	W-7
6	CORP. STOP 2" AIR VACUUM VALVE ASSEMBLY	W-7
7	1" MANUAL AIR RELEASE ASSEMBLY	W-5
8	2" BLOW-OFF MANUAL AIR RELEASE ASSEMBLY.	W-5&6
9	2" MANUAL BLOW-OFF / AIR RELEASE ASSEMBLY.	W-6&7

REV.	APPROVED	DATE	CARLSBAD MUNICIPAL WATER DISTRICT	Robert T. Johnson Jr. 7/10/08
			OUTLETS ON A.C. OR P.V.C. MAIN FOR 1 INCH THRU 2 INCH ASSEMBLIES	CITY ENGINEER DATE
				STANDARD DWG. NO. W-8

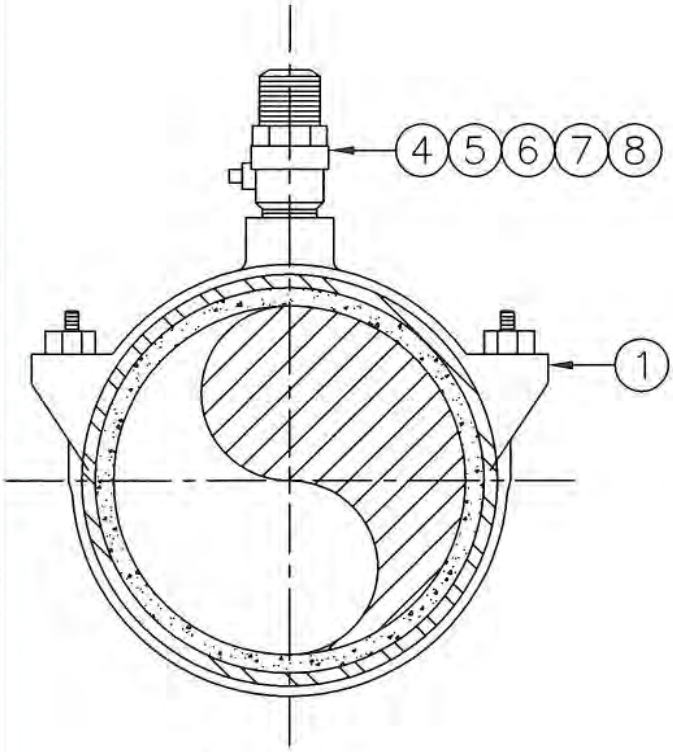

D.I. MAIN

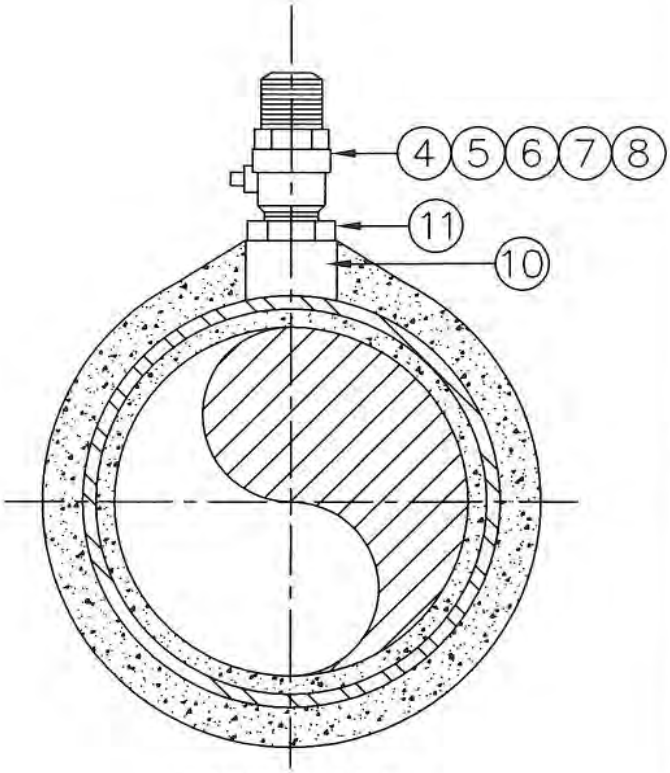

STEEL MAIN

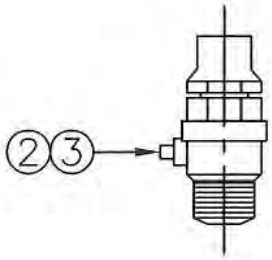

FOR WATER SERVICE CONNECTION (TYP.)

ITEM	DESCRIPTION	SPEC/DWG
1	DOUBLE BAND BRASS SERVICE SADDLE.	
2	CORP. STOP 1" WATER SERVICE.	W-3
3	CORP. STOP 2" WATER SERVICE.	W-4
4	CORP. STOP 1" AIR VACUUM VALVE ASSEMBLY.	W-7
5	CORP. STOP 2" AIR VACUUM VALVE ASSEMBLY.	W-7
6	1" MANUAL AIR RELEASE ASSEMBLY.	W-5
7	2" BLOW-OFF MANUAL AIR RELEASE ASSEMBLY.	W-6&7
8	2" BLOW-OFF / AIR RELEASE ASSEMBLY.	W-6&7
9	NOT USED	
10	3000 PSI FORGED STEEL COUPLING WELDED TO MAIN.	W-14
11	INSULATING BUSHING. (LEXAN OR DELRIN).	W-10

REV.	APPROVED	DATE	CARLSBAD MUNICIPAL WATER DISTRICT	Robert T. Johnson Jr. 7/10/08 CITY ENGINEER DATE
			OUTLETS ON D.I. OR STEEL MAIN FOR 1 INCH THRU 2 INCH ASSEMBLIES	STANDARD DWG. NO. W-9

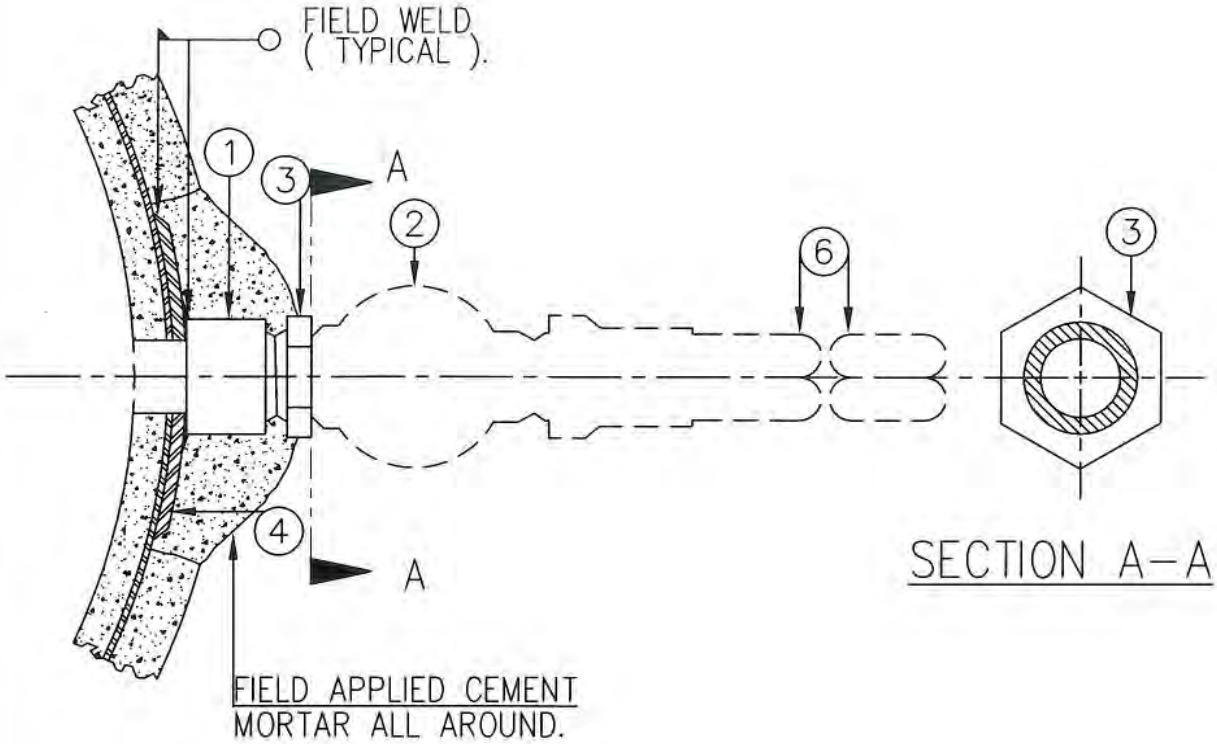

NOTES:

1. DIELECTRIC CONNECTIONS SHALL BE REQUIRED ON ALL AIR AND VACUUM VALVE ASSEMBLIES, MANUAL AIR RELEASE ASSEMBLIES, BLOW-OFF ASSEMBLIES AND WATER SERVICE ASSEMBLIES WHERE COPPER TUBING OR BRASSS PIPE CONNECTIONS ARE MADE TO STEEL MAINS.

SIZING TABLE

COPPER TUBING	VALVE OR CORP.STOP	STEEL COUPLING	INSULATING BUSHING
2"	2"	2 1/2"	2 1/2" x 2"
1"	1"	1 1/2"	1 1/2" x 1"

ITEM	DESCRIPTION	SPEC/DWG
1	CL 3000 STEEL COUPLING – STEEL WELDED.	
2	SEE DRAWING NO W9	W–9
3	INSULATING BUSHING – NPT LEXAN OR DELRIN.	
4	9" DIA. 10 GA. SADDLE.	
5	NOT USED	
6	1" & 2" COPPER SERVICE PIPE (TYPE "K" SOFT).	

REV.	APPROVED	DATE	CARLSBAD MUNICIPAL WATER DISTRICT	Robert T. Johnson Jr. 7/9/08
			DIELECTRIC CONNECTION TO STEEL MAIN	CITY ENGINEER DATE
				STANDARD DWG. NO. W-10

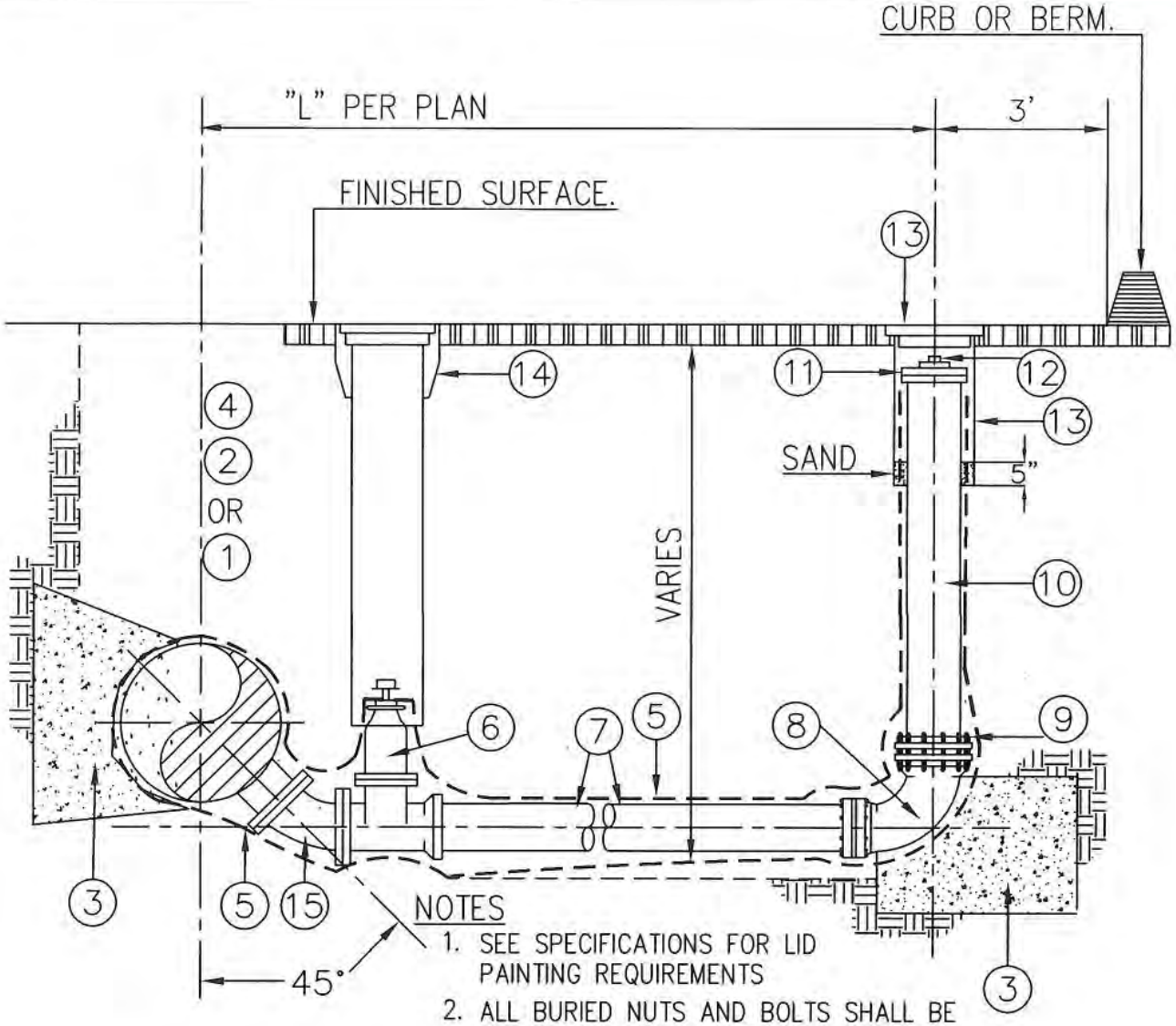

NOTES

1. SEE SPECIFICATIONS FOR LID PAINTING REQUIREMENTS
2. ALL BURIED NUTS AND BOLTS SHALL BE WAX TAPE COATED PER SPEC. 09902.

ITEM	DESCRIPTION	SPEC/DWG
1	A.C.P. – RT X FL TEE.	
2	STEEL PIPE – FL TAPPED CONNECTION.	W–14
3	CONCRETE THRUST BLOCK 560–C–3250.	W–19
4	D.I.P. – MJ X FL TEE. (FL. BOSS OUTLET ALTERNATE / DELETE THRUST BLOCK).	
5	POLYETHYLENE WRAP.	
6	FL X PJ GATE VALVE.	
7	PE CL. 50 D.I.P.	
8	MJ 90° BEND.	
9	RETAINER GLAND.	
10	FL X PE CL. 50 D.I.P.	
11	COMPANION FLANGE CONCENTRICALLY DRILLED AND TAPPED FOR ITEM 12.	
12	THREADED PLUG, OR STL. NIPPLE, FEMALE HOSE NIPPLE & HOSE CAP.	
13	12" VAL. BOX MKD. "WATER" OR "RECYCLED WATER"	W–6
14	VALVE BOX ASSEMBLY	W–13
15	FL X FL 45° D.I. BEND.	

REV.	APPROVED	DATE	CARLSBAD MUNICIPAL WATER DISTRICT	Robert T. Johnson Jr. 7/10/08
			6" BLOW-OFF ASSEMBLY (DUCTILE IRON)	CITY ENGINEER DATE
				STANDARD DWG. NO. W-11

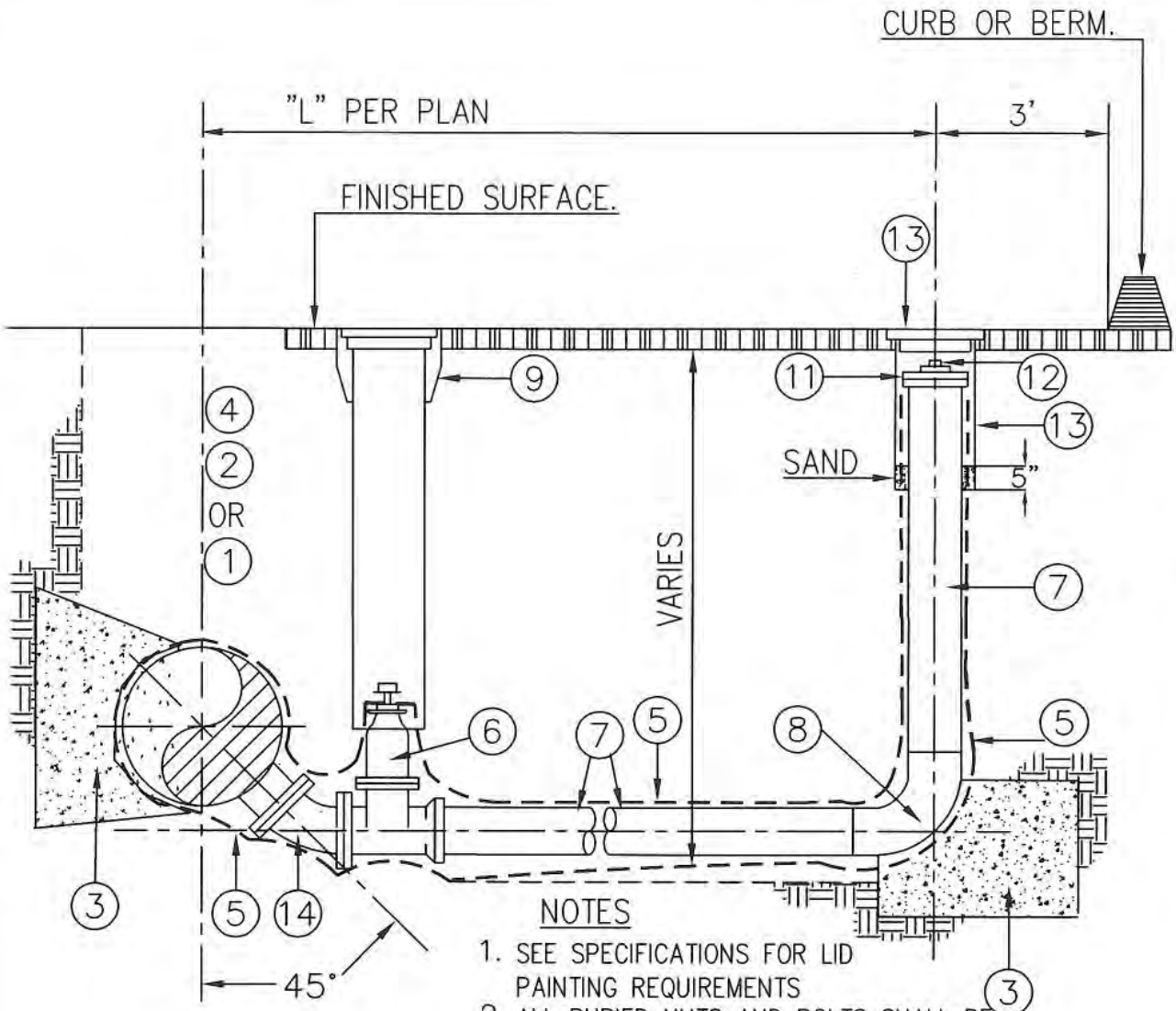

NOTES

1. SEE SPECIFICATIONS FOR LID PAINTING REQUIREMENTS
2. ALL BURIED NUTS AND BOLTS SHALL BE WAX TAPE COATED PER SPEC. 09902

ITEM	DESCRIPTION	SPEC/DWG
1	A.C.P. – RT X FL TEE.	
2	STEEL PIPE – FL TAPPED CONNECTION.	W–14
3	CONCRETE THRUST BLOCK 560–C–3250.	W–19
4	D.I.P. – MJ X FL TEE. (FL. BOSS OUTLET ALTERNATE / DELETE THRUST BLOCK).	
5	POLYETHYLENE WRAP.	
6	FL X FL GATE VALVE.	
7	CML&C 0.25" STEEL	
8	WELD ON PREFABRICATED CML&C W/TAPE COAT STEEL / 90° BEND	09870; 15061
9	VALVE BOX ASSEMBLY	W–13
10	FL X PE CML&C STL/SOWO FL	
11	COMPANION FLANGE DRILLED AND TAPPED FOR ITEM 12.	
12	THREADED PLUG, OR STL. NIPPLE, FEMALE HOSE NIPPLE & HOSE CAP.	
13	12" VAL. BOX MKD. "WATER" OR "RECYCLED WATER"	W–6
14	FL X FL 45° D.I. BEND	

REV.	APPROVED	DATE	CARLSBAD MUNICIPAL WATER DISTRICT	Robert T. Johnson Jr. 7/10/08
			6" BLOW-OFF ASSEMBLY (STEEL)	CITY ENGINEER DATE
				STANDARD DWG. NO. W-11A

NOTES:

1. FIRE HYDRANT BASE – 6 EA. 13/16" DIA. HOLES.
2. BOLTS & NUTS – 3/4" X 3" HEX HEADS.
3. INSTALL BOLTS WITH NUTS ON TOP OF FLANGE.
4. SEE SPECIFICATION FOR PAINTING REQUIREMENTS. (BEGIN PAINT AT SCORE IN BREAK-OFF SPOOL).
5. SEE SPECIFICATION FOR BURIED FLANGE REQUIREMENTS.
6. SEE IMPROVEMENT PLANS FOR FIRE HYDRANT LOCATIONS.
7. A 3' CLEAR SPACE SHALL BE MAINTAINED AROUND THE CIRCUMFERENCE OF F.H. EXCEPT AS OTHERWISE REQUIRED OR APPROVED.

* 36" BEHIND FACE OF CURB FOR NON-CONTIGUOUS / OR NO SIDEWALK.

8. ALL BURIED NUTS AND BOLTS SHALL BE WAX TAPE COATED PER SPEC. 09902

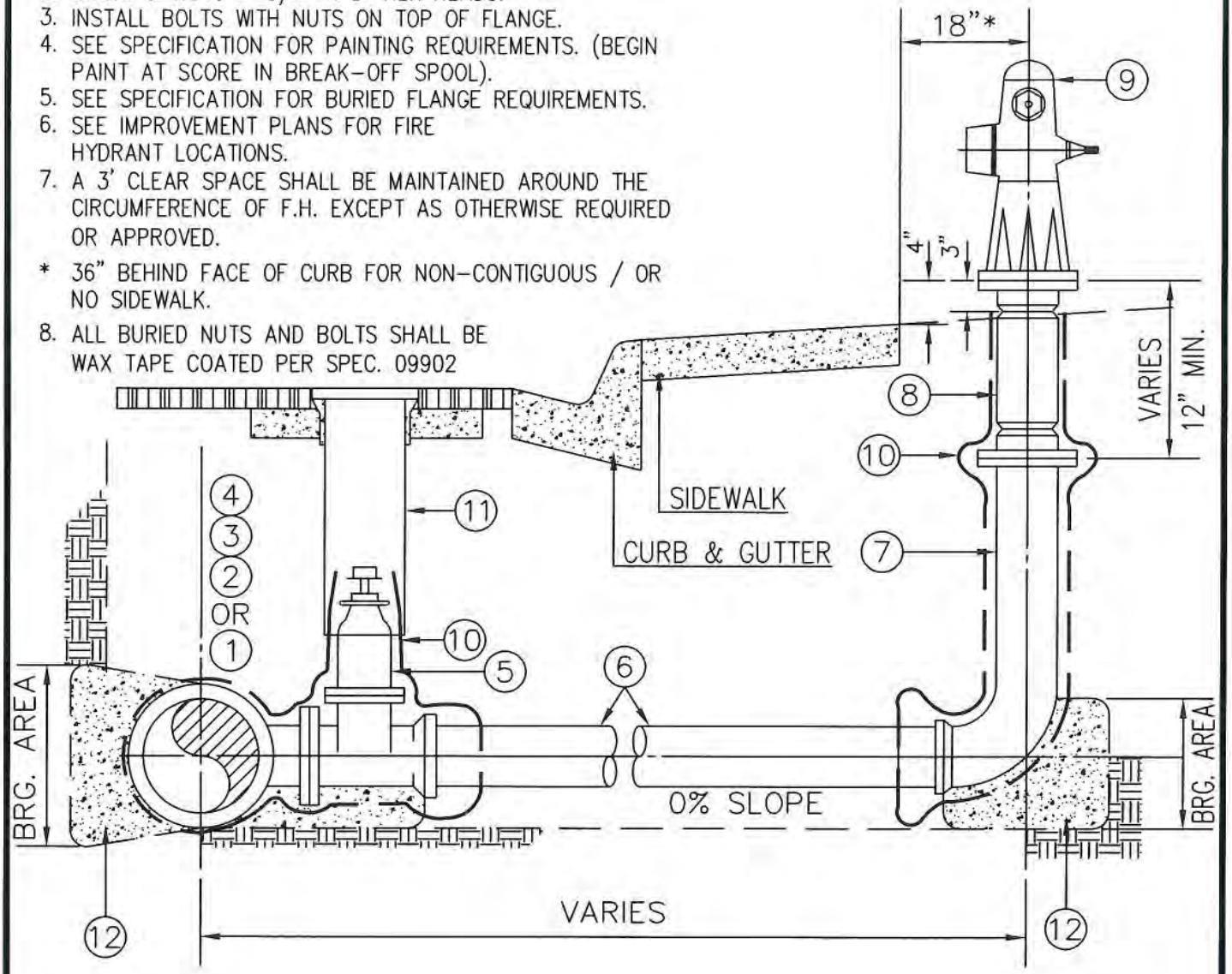

ITEM	DESCRIPTION	SPEC/DWG
1	A.C.P. – RT X FL TEE.	
2	DUCTILE IRON PIPE – D.I. TEE WITH 6" FL. OUTLET. (PJ OR MJ X FL)	
3	STEEL PIPE – 6" STEEL FL OUTLET.	
4	ASBESTOS CEMENT PIPE – RT X FL TEE WITH 6" OUTLET.	
5	6" FL X PJ GATE VALVE.	
6	6" CLASS 150 PVC PRESSURE PIPE.	
7	6" X 30" PJ X FL BURYELL. (6 HOLE PATTERN).	
8	6" VARIABLE LENGTH FL. BREAK OFF SPOOL. (GROOVED BOTH ENDS).	
9	6" FIRE HYDRANT.	
10	POLYETHYLENE ENCASEMENT	
11	VALVE BOX ASSEMBLY.	
12	THRUST BLOCK	

REV.	APPROVED	DATE	CARLSBAD MUNICIPAL WATER DISTRICT	
			FIRE HYDRANT ASSEMBLY	Robert T. Johnson Jr. 7/10/08 CITY ENGINEER DATE
				STANDARD DWG. NO. W-12

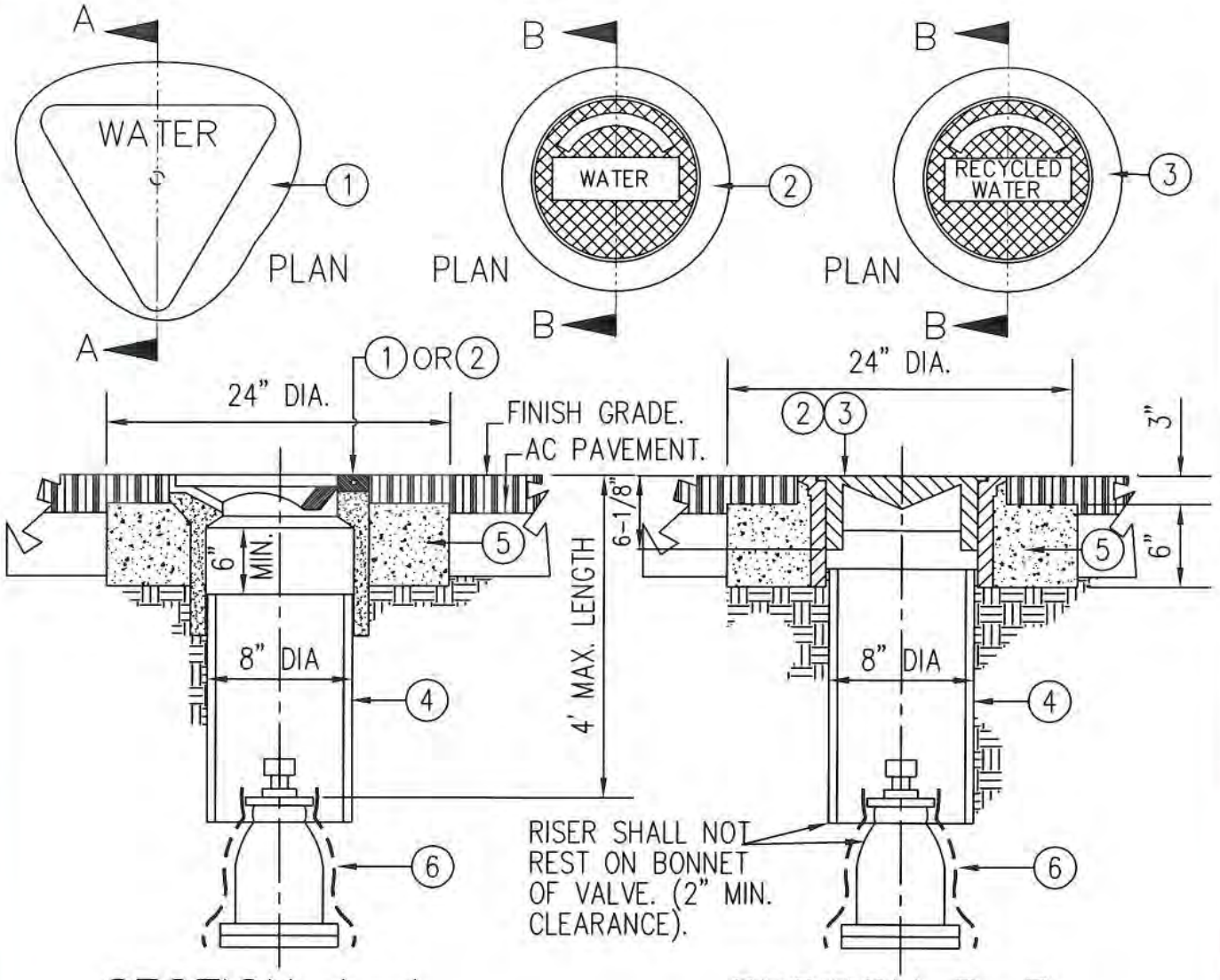

SECTION A–A
DOMESTIC WATER

SECTION B–B
RECLAIMED WATER

NOTES:

1. IN NON-ROAD AREAS PLACE MARKER POST NEXT TO VALVE BOX ASSEMBLY AS DIRECTED BY THE ENGINEER. (SEE DRAWING NO. 23).
2. ALL BURIED NUTS AND BOLTS SHALL BE WAX TAPE COATED PER SPEC. 09902
3. SEE DRAWING NO. 23 FOR GATE VALVE EXTENSION.
4. UPPER SIDE OF LID TO RECIEVE 2 COATS OF PAINT. SEE SPECIFICATIONS FOR PAINTING REQUIREMENTS, (PAGE 4).

ITEM	DESCRIPTION	SPEC/DWG
1	VAL. BOX & COVER WITH NON-SKID C.I. COVER AND LIFT HOLE, MARKED "WATER".	
2	VAL. BOX & COVER FOR NORMALLY CLOSED VALVE.	
3	VAL. BOX & COVER MARKED "RECYCLED WATER".	
4	8" C900 PVC OR ASPHALT COATED WELL CASING.	
5	CONCRETE COLLAR IDENTIFY CONC. BY CLASS 560-C-3250	
6	POLYETHYLENE ENCASEMENT	

REV.	APPROVED	DATE	CARLSBAD MUNICIPAL WATER DISTRICT	
			VALVE BOX ASSEMBLY	Robert T. Johnson Jr. 7/10/08 CITY ENGINEER DATE
				STANDARD DWG. NO. W-13

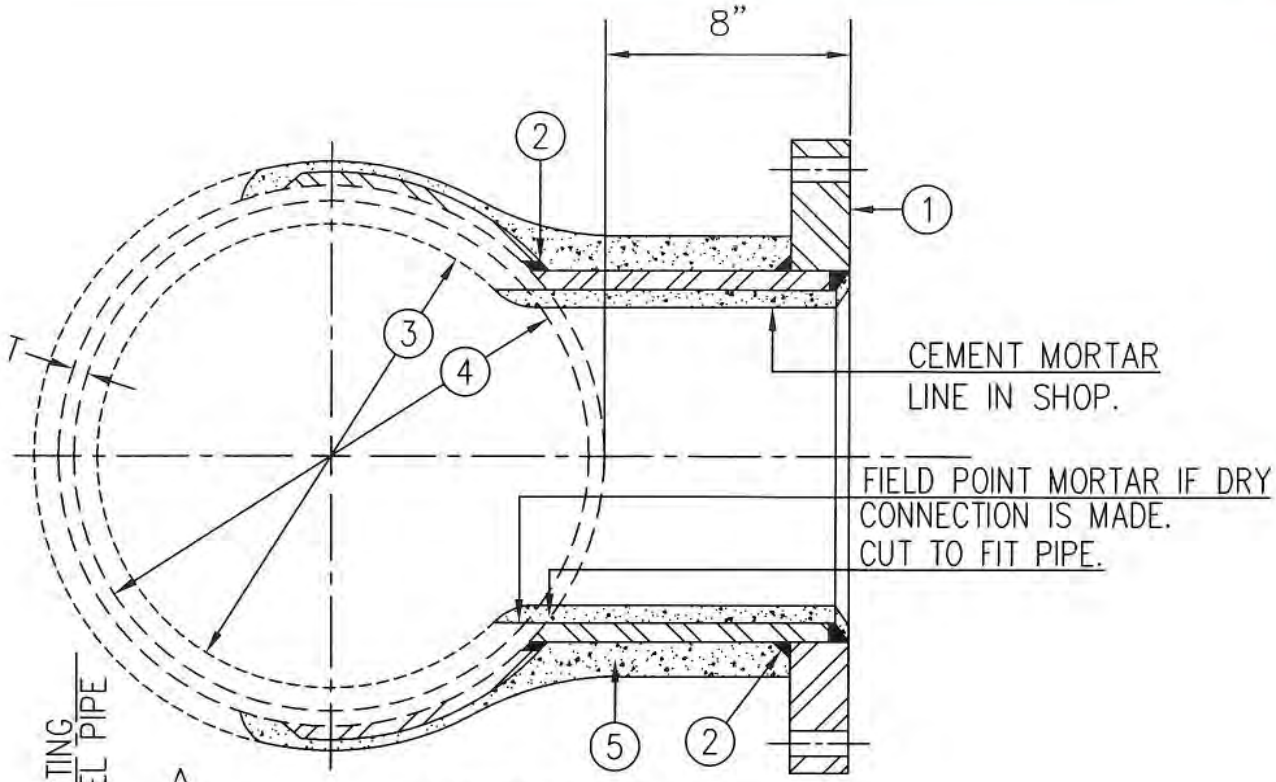

SECTION A–A

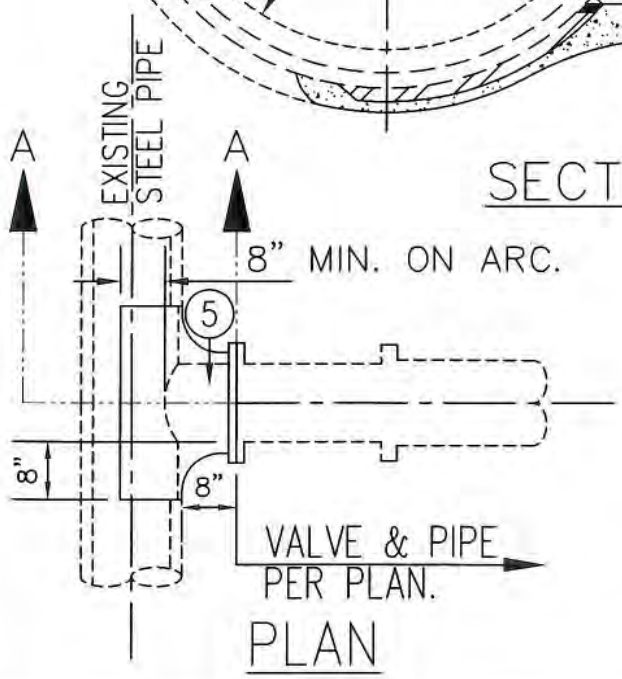

PLAN

NOTES:

1. FLANGE PRESSURE CLASS & FACING SHALL BE SAME AS ADJACENT VALVE.
2. REINFORCING SADDLE THICKNESS TO BE SAME AS MAIN "T"(3/16" MINIMUM).
3. FULL BACKING PLATE IS REQUIRED ON 12" AND LARGER MAINS & MAINS EXCEEDING 150 P.S.I.

ITEM	DESCRIPTION	SPEC/DWG
1	S.O.W.O. FLANGE.	
2	FIELD WELD (TYPICAL).	
3	EXISTING STEEL PIPE.	
4	EXISTING STEEL PIPE I.D.	
5	3/4" MIN. CEMENT MORTAR COAT IN FIELD.	

REV.	APPROVED	DATE	CARLSBAD MUNICIPAL WATER DISTRICT	Robert T. Johnson Jr. 7/10/08
			TAPPED CONNECTION TO STEEL MAIN	CITY ENGINEER DATE
				STANDARD DWG. NO. W-14

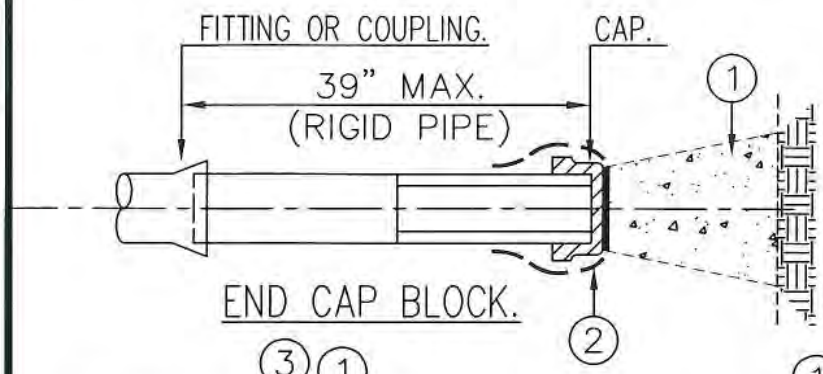

END CAP BLOCK.

REINFORCING STEEL DETAIL.

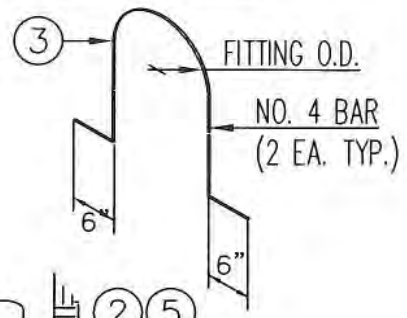

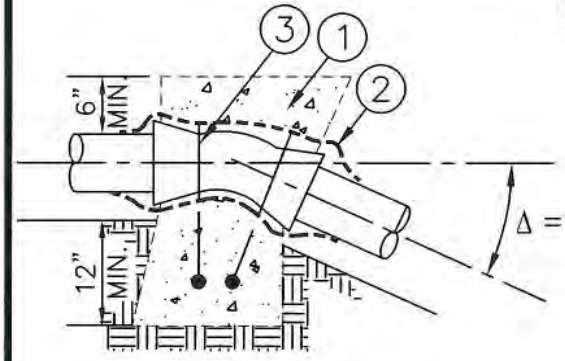

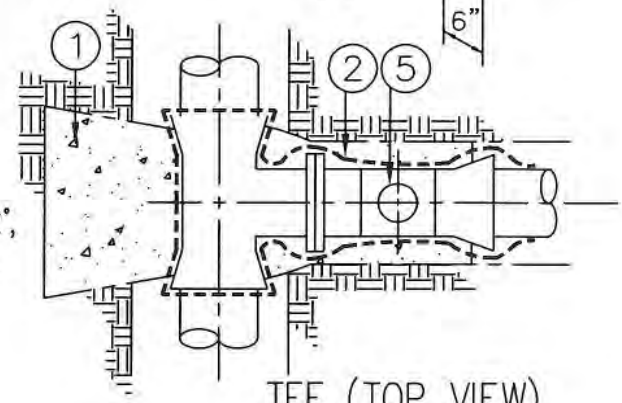

TEE (TOP VIEW).

VERTICAL BEND.

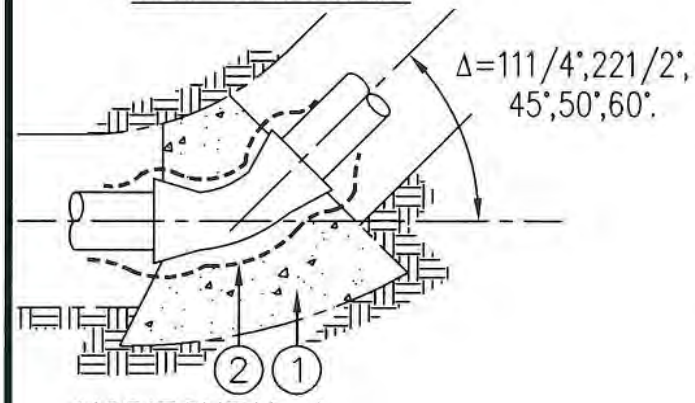

HORIZONTAL & VERTICAL BEND.

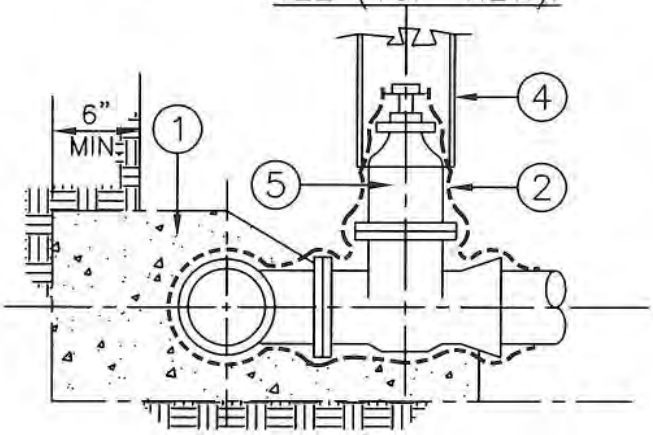

TEE (SIDE VIEW).

NOTES:

1. FITTINGS SHALL BE DUCTILE IRON FOR D.I.P. & P.V.C.; CAST IRON FOR A.C.P. (CEMENT LINED SHORT BODY).
2. FOR A.C. PIPE, A MIN. 3'-3" TO A 6'-6" MAX. LENGTH INTO AND OUT OF ALL FITTINGS.
3. CONCRETE SHALL BE 6 SACK, (3250 P.S.I.). A MIN. 3 DAY CURING TIME BEFORE HYDROSTATIC TEST.
4. SEE DWG'S. NO. 17 & 18 FOR REDUCER, PLUG, & BUTTERFLY VALVE THRUST BLOCKS.
5. ENGINEER TO PROVIDE CALCULATIONS FOR THRUST/ANCHOR BLOCK SIZE.
6. ALL BURIED NUTS AND BOLTS SHALL BE WAX TAPE COATED PER SECT. 09902

ITEM	DESCRIPTION	SPEC/DWG
1	CONCRETE THRUST BLOCK. (560-C-3250)	
2	POLYETHYLENE ENCASEMENT.	
3	NO. 4 REINFORCING STEEL.	
4	VALVE BOX ASSEMBLY.	
5	FL X RT OR FL X MJ GATE VALVE.	

REV.	APPROVED	DATE	CARLSBAD MUNICIPAL WATER DISTRICT	Robert T. Johnson Jr. 7/10/08 CITY ENGINEER DATE
			CONCRETE THRUST BLOCKS FOR NON-RESTRAINED JOINTS	STANDARD DWG. NO. W-15

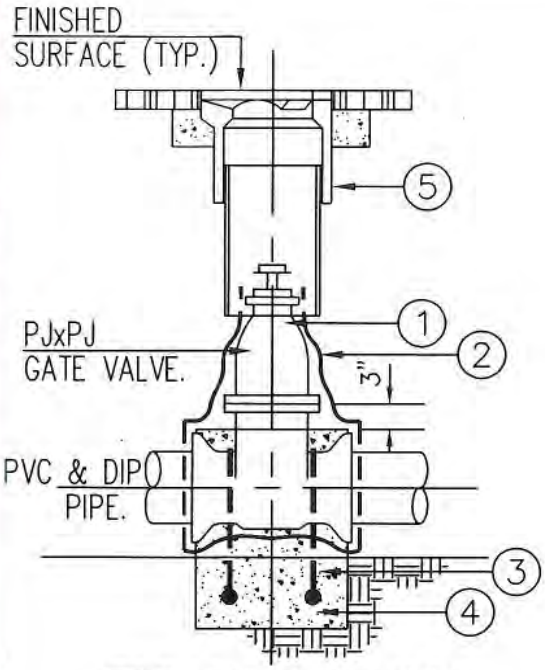

TRENCH ELEVATION
PVC PIPE

NOTES:

1. SEE SPECIFICATIONS FOR BURIED FLANGE AND VALVE REQUIREMENTS.
2. SEE DRAWING NO.19 FOR THRUST BLOCK BEARING AREAS.
3. ALL BURIED NUTS AND BOLTS SHALL BE WAX TAPE COATED PER SECT. 09902.

REINFORCING
STEEL DETAIL.

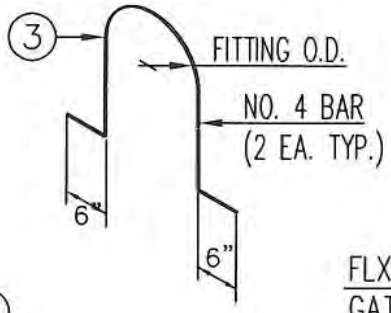

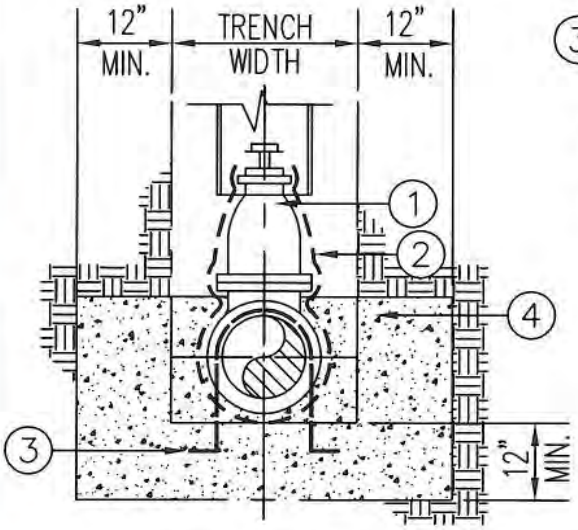

TRENCH SECTION
(TYPICAL)

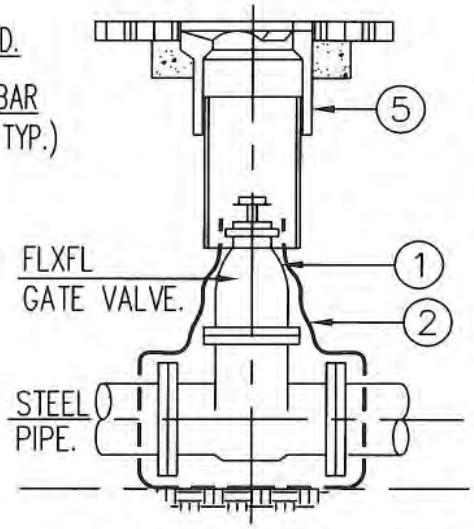

TRENCH ELEVATION
STEEL PIPE

ITEM	DESCRIPTION	SPEC/DWG
1	GATE VALVE	
2	POLYETHYLENE ENCASEMENT	
3	NO. 4 REINFORCING STEEL.	
4	CONCRETE THRUST/ANCHOR BLOCK. (3250 P.S.I.) 560-C-3250	W-19
5	VALVE BOX ASSEMBLY.	W-13

REV.	APPROVED	DATE	CARLSBAD MUNICIPAL WATER DISTRICT	Robert T. Johnson Jr. 7/10/08
			GATE VALVE INSTALLATION P.V.C., & STEEL PIPE.	CITY ENGINEER DATE
				STANDARD DWG. NO. W-16

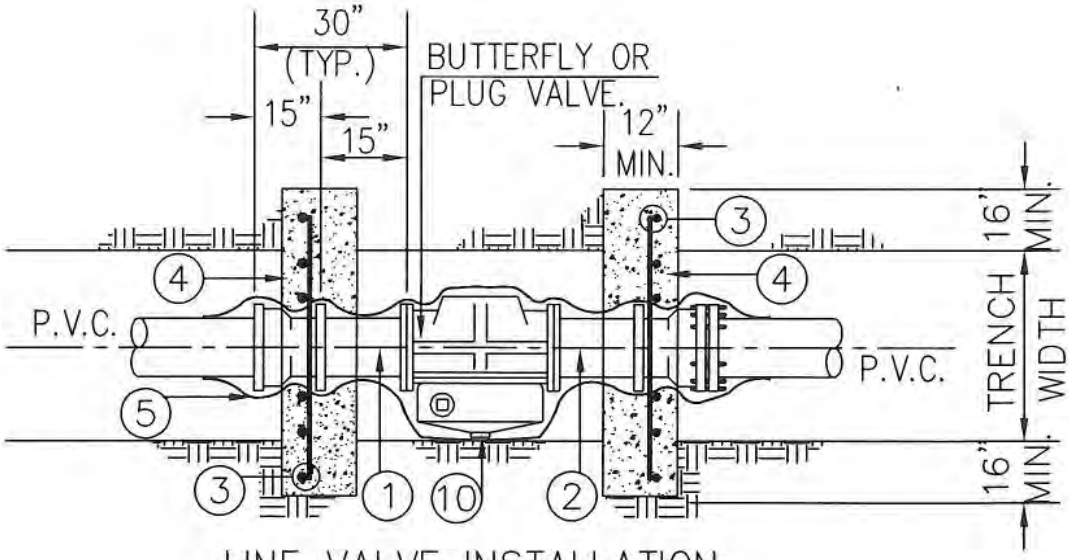

LINE VALVE INSTALLATION

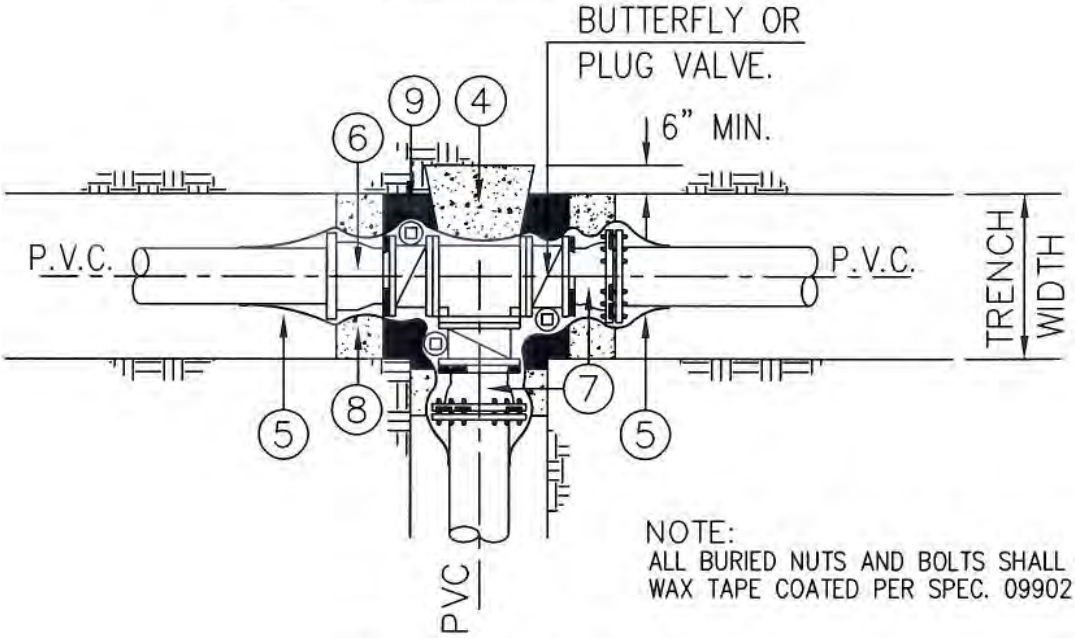

NOTE:
ALL BURIED NUTS AND BOLTS SHALL BE WAX TAPE COATED PER SPEC. 09902

TEE ASSEMBLY

ITEM	DESCRIPTION	SPEC/DWG
1	FOR A.C.P. – 30" LONG FL X PJ WALL PIPE.	
2	FOR P.V.C. – 30" LONG FL X MJ WALL PIPE.	
3	NO. 4 REINFORCING STEEL 6" O.C. EACH WAY.	
4	CONCRETE THRUST BLOCK. (3250 P.S.I.) 560-C-3250	W-19
5	POLYETHYLENE ENCASEMENT	
6	FOR P.V.C. – FL X PJ ADAPTER.	
7	FOR P.V.C. FL X MJ ADAPTER.	
8	CONCRETE SUPPORT.	
9	SANDBAGS.	
10	BUTTERFLY OR PLUG VALVE	

REV.	APPROVED	DATE	CARLSBAD MUNICIPAL WATER DISTRICT	Robert T. Johnson Jr. 7/10/08
			BUTTERFLY & PLUG VALVE INSTALLATION FOR P.V.C.	CITY ENGINEER DATE
				STANDARD DWG. NO. W-17

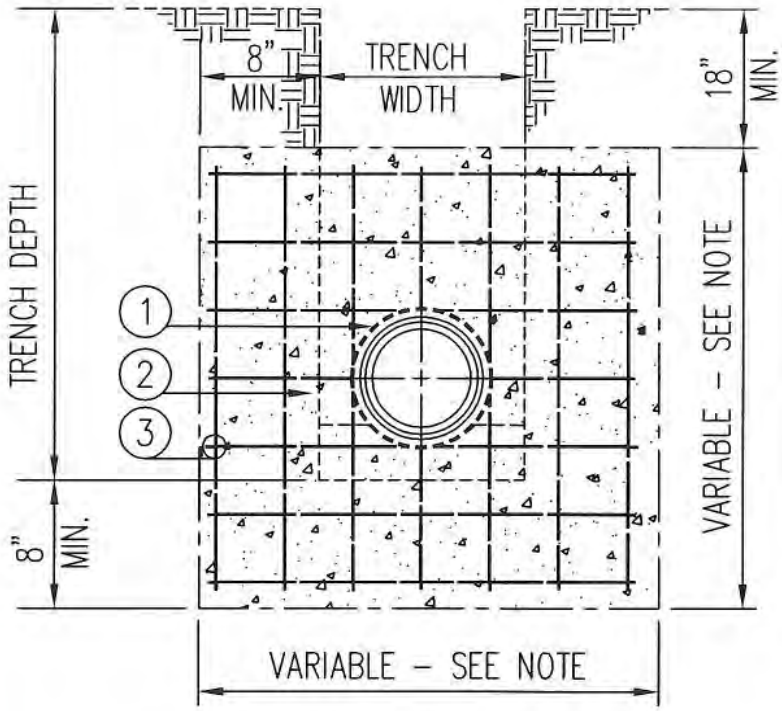

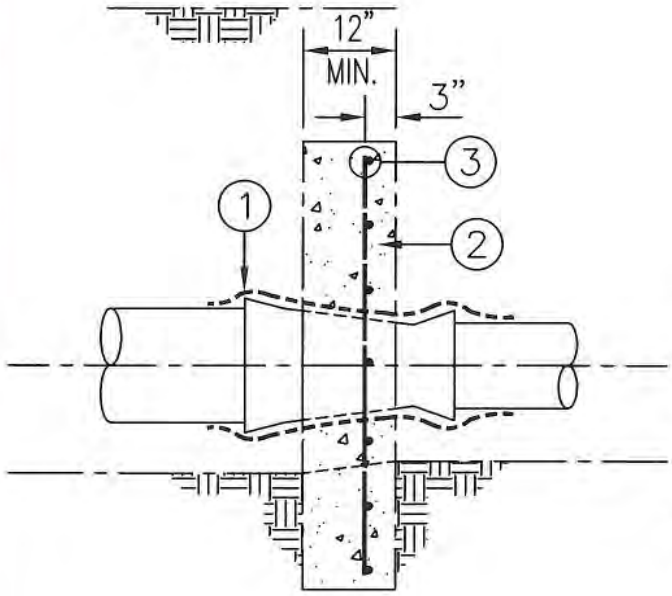

NOTES:

BEARING AREA SHALL BE THE DIFFERENCE BETWEEN THE BEARING AREAS REQUIRED FOR THRUST ANCHORAGE OF MAINS ON EACH SIDE OF REDUCER AS FOUND FROM STD. DWG. 19 PLUS THE AREA OF THE TRENCH OPENING.

MINIMUM DIMENSIONS SHOWN SHALL BE ADHERED TO.

ITEM	DESCRIPTION	SPEC/DWG
1	POLYETHYLENE ENCASEMENT	
2	CONCRETE THRUST BLOCK (560-C-3250 CONCRETE).	W-19
3	NO. 4 BAR 9" ON CENTER EACH WAY.	

REV.	APPROVED	DATE	CARLSBAD MUNICIPAL WATER DISTRICT	Robert T. Johnson Jr. 2/10/08
			THRUST ANCHOR FOR WATER MAIN REDUCER - 4 THRU 16 INCH.	CITY ENGINEER DATE
				STANDARD DWG. NO. W-18

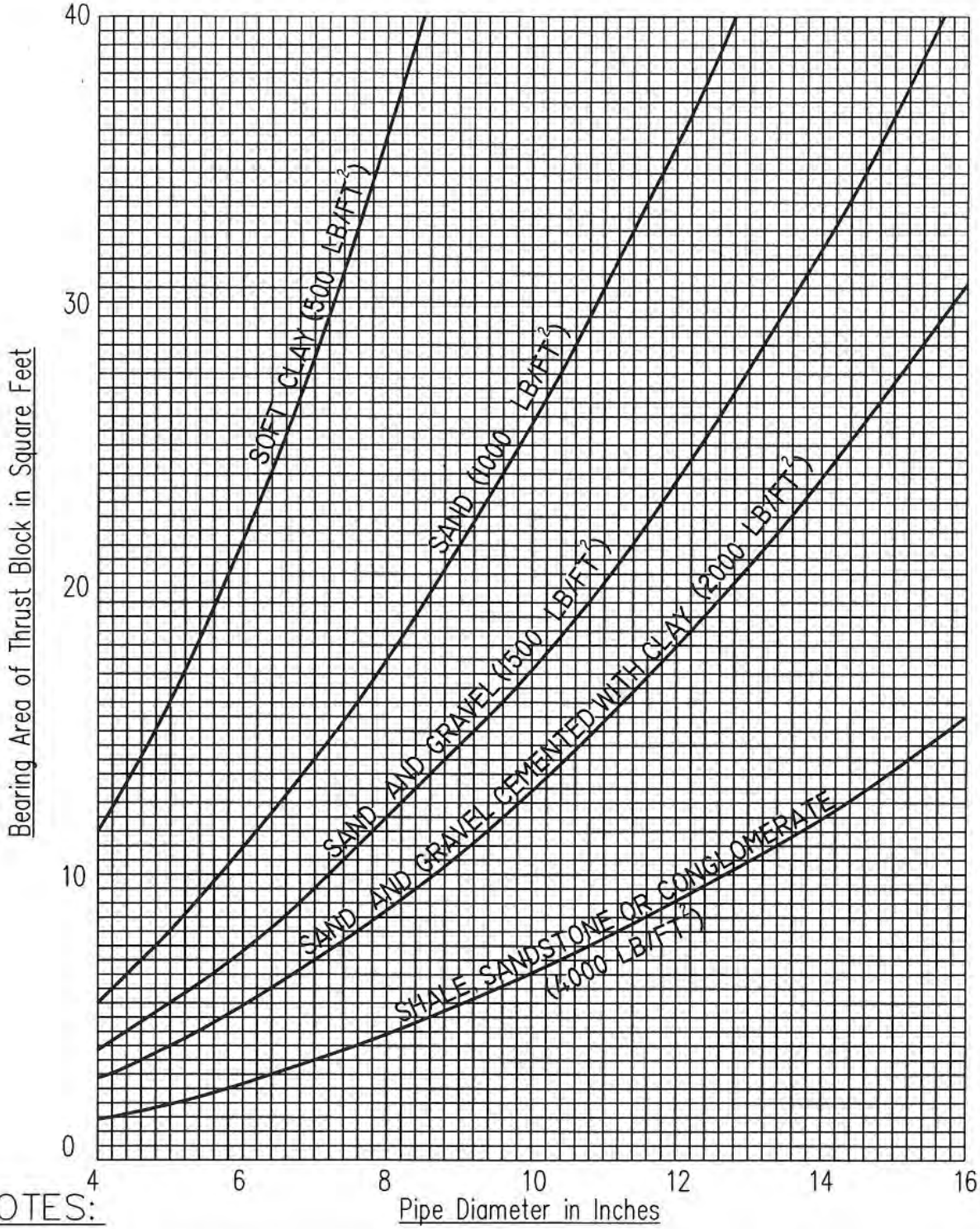

NOTES:

1. BASED ON 225 PSI TEST PRESSURE AND BEARING VALUES OF DRY SOILS.
2. VALUES FROM CURVES ARE FOR TEES AND DEADENDS, I.E. ; STRAIGHT LINE THRUST.
   FOR 90° BEND: 1.4 VALUE FROM CURVE.
   FOR 45° BEND: 0.8 VALUE FROM CURVE.
   FOR 22 1/2° BEND: 0.4 VALUE FROM CURVE.
3. FOR CONDITIONS NOT COVERED BY CURVES, SPECIAL THRUST WALLS, THRUST BLOCKS AND ANCHORS MUST BE CALCULATED AND APPROVED.

REV.	APPROVED	DATE	CARLSBAD MUNICIPAL WATER DISTRICT	Robert T. Johnson Jr. 7/10/08
			THRUST BLOCK BEARING AREAS	CITY ENGINEER DATE
				STANDARD DWG. NO. W-19

NOTES:

1. THERE SHALL BE NO FITTINGS OR CONNECTIONS BETWEEN THE METER AND BACKFLOW ASSEMBLY.

2. CONSTRUCT 2' HIGH RETAINING WALL ON 3 SIDES OF BACKFLOW PREVENTER WHEN INSTALLED ON 4:1 OR GREATER SLOPE. OPEN END SHALL BE AT DOWNHILL SIDE OF SLOPE. PROVIDE 2' HORIZONTAL CLEARANCE BETWEEN WALL AND BACKFLOW PREVENTER.

3. DO NOT INSTALL IN AREA SUBJECT TO FLOODING.

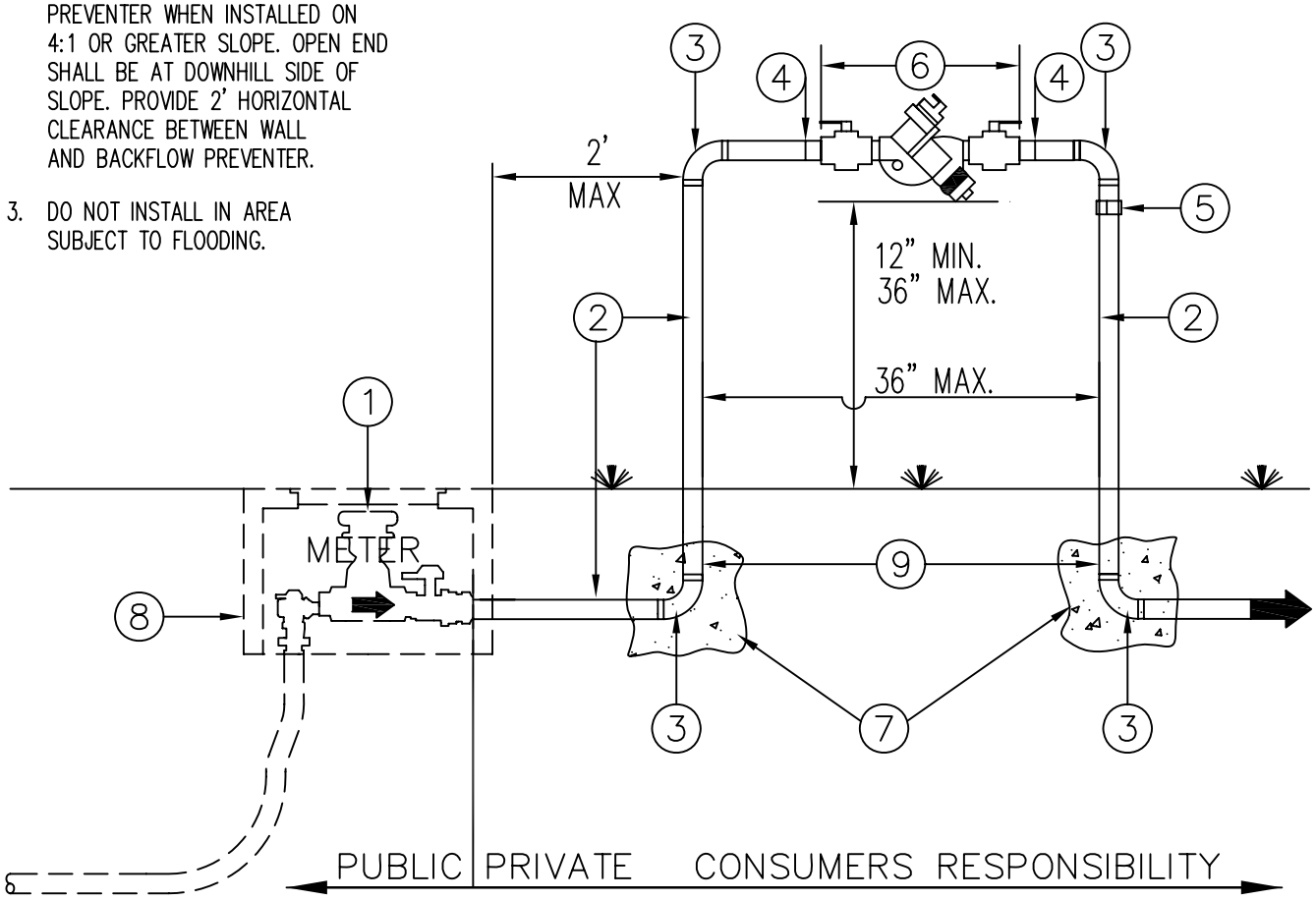

TO BE INSTALLED PURSUANT TO MUNICIPAL CODE BOOK 14.08.010,4001-SEC.5 & TITLE 17 OF THE CALIFORNIA ADMINISTRATIVE CODE.

ITEM	DESCRIPTION	SPEC/DWG
1	METER AND VALVE (BY DISTRICT).	
2	TYPE K HARD OR TYPE L HARD COPPER OR BRASS RISER.	W-9
3	COPPER OR BRASS 90° ELBOW (SOLDER JOINTS OR THREADED FITTINGS).	
4	COPPER OR BRASS NIPPLE.	
5	BRASS UNION.	
6	APPROVED BACKFLOW PREVENTER ASSEMBLY.	
7	FOUNDATION ANCHOR BLOCK.	
8	METER BOX.	
9	WRAP PIPE WITHIN CONCRETE WITH PROTECTIVE UTILITY TAPE.	APP. C

REV.	APPROVED	DATE	CARLSBAD MUNICIPAL WATER DISTRICT	
			2 INCH AND UNDER BACKFLOW INSTALLATION	Glen R. Van Peski 12/11
				CITY ENGINEER DATE
				STANDARD DWG. NO. W-20

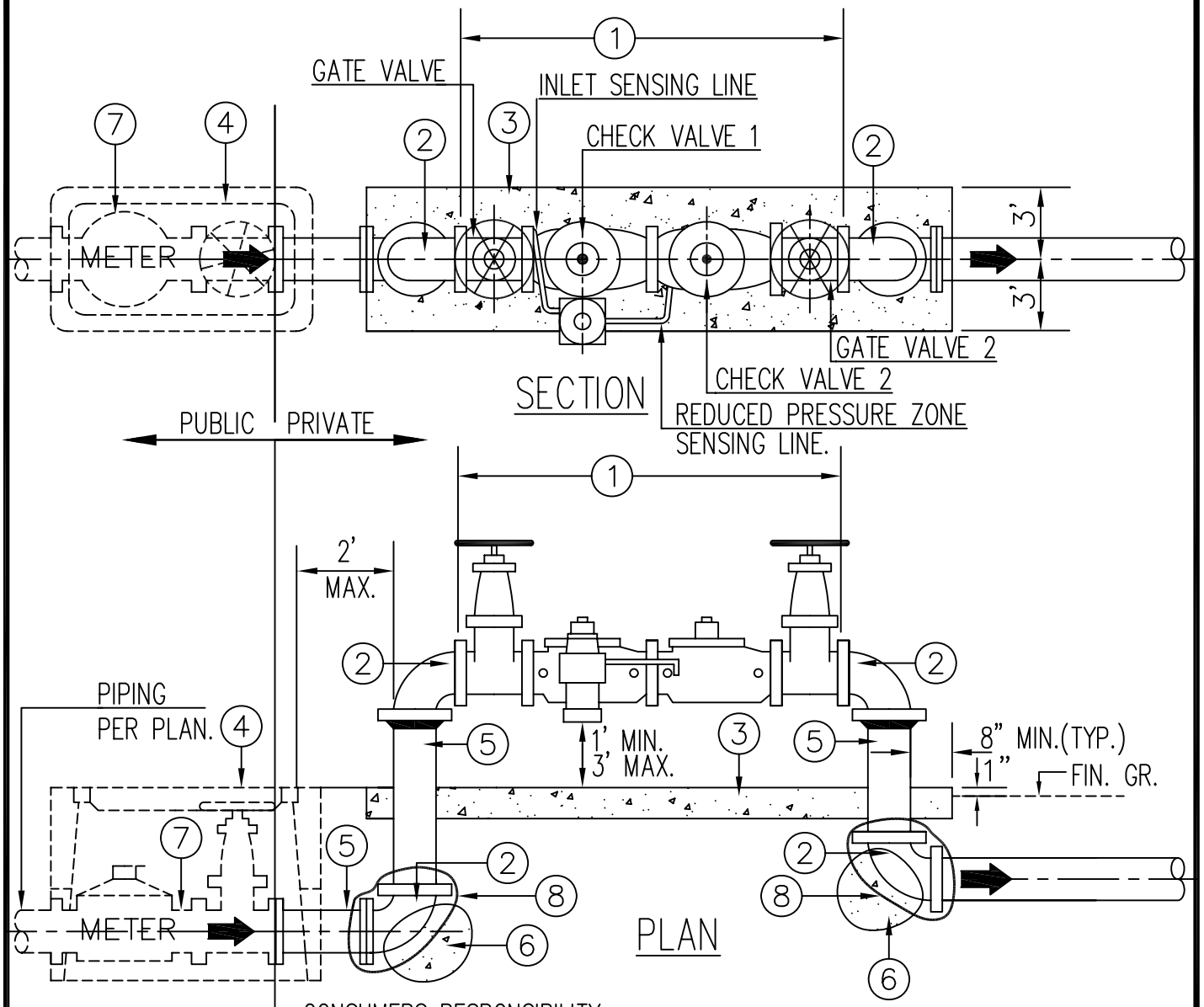

CONSUMERS RESPONSIBILITY

TO BE INSTALLED PURSUANT TO MUNICIPAL CODE BOOK 14.08.010,4001-SEC. 5 & TITLE 17 OF THE CALIFORNIA ADMINISTRATIVE CODE.

NOTE:

ALL BURIED NUTS AND BOLTS SHALL BE 316 STAINLESS STEEL INSTALLED PER SEC. 15056.

ITEM	DESCRIPTION	SPEC/DWG
1	APPROVED CHECK VALVE AND BACKFLOW PREVENTER (RP) ASSEMBLY.	
2	FL. 90° BEND (SIZE X TYPE) PER PLAN.	
3	4 INCH THICK CONCRETE PAD (2000 PSI).	
4	VAULT TO BE PURCHASED AND INSTALLED BY CONTRACTOR	
5	FL. 10 GA CML&C C-150 STEEL SPOOL WITH S.O.W.O. FLANGE.	
6	THRUST BLOCKING (3250 PSI). 560-C-3250	W-19
7	VALVE AND METER (BY DISTRICT).	
8	POLYETHYLENE ENCASEMENT	

REV.	APPROVED	DATE	CARLSBAD MUNICIPAL WATER DISTRICT	
			3 INCH AND ABOVE BACKFLOW INSTALLATION	Glen R. Van Peski 12/11 CITY ENGINEER DATE
				STANDARD DWG. NO. W-21

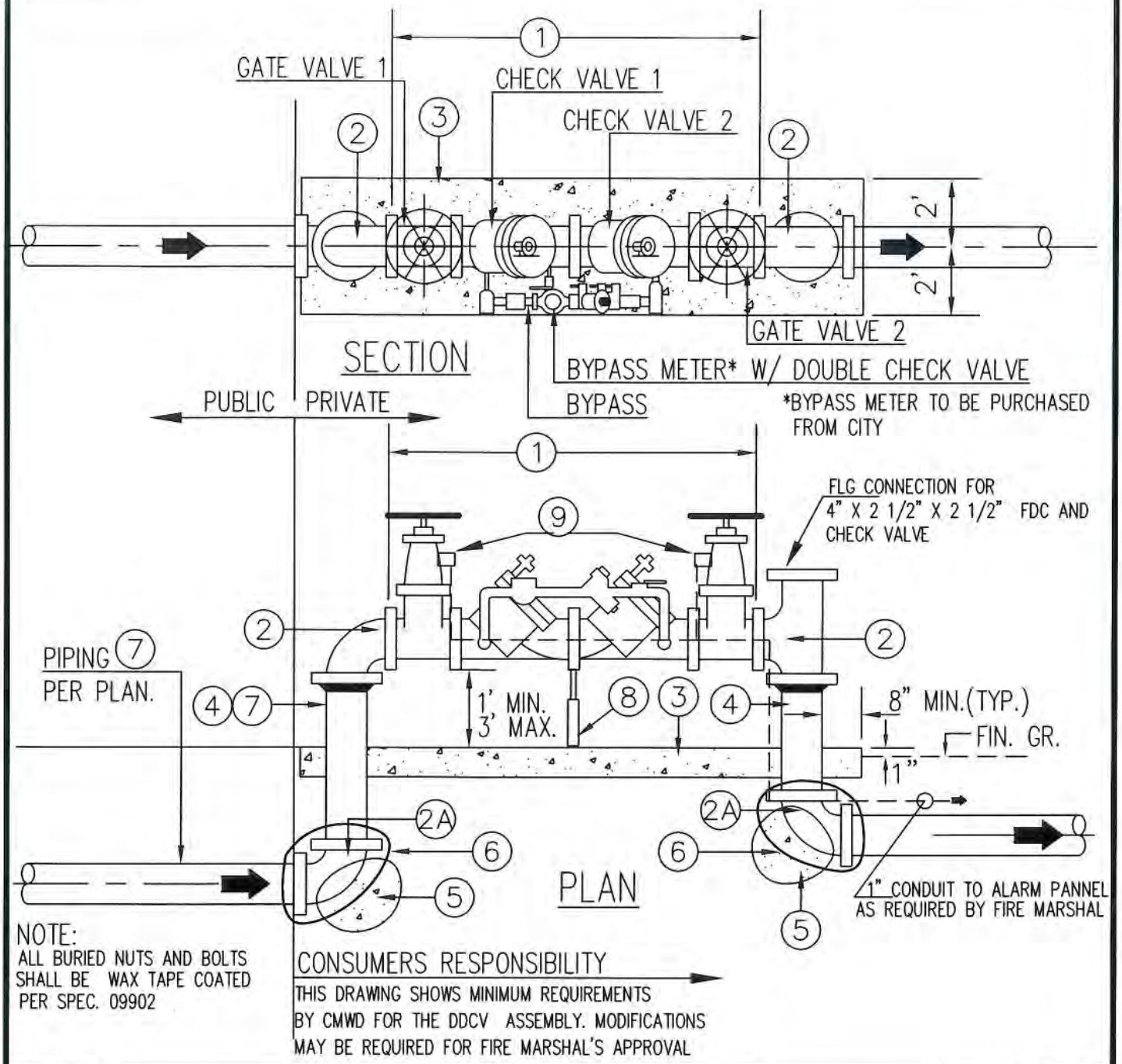

NOTE:
ALL BURIED NUTS AND BOLTS SHALL BE WAX TAPE COATED PER SPEC. 09902

CONSUMERS RESPONSIBILITY

THIS DRAWING SHOWS MINIMUM REQUIREMENTS BY CMWD FOR THE DDCV ASSEMBLY. MODIFICATIONS MAY BE REQUIRED FOR FIRE MARSHAL'S APPROVAL

ITEM	DESCRIPTION	SPEC/DWG
1	APPROVED DOUBLE CHECK VALVE AND DETECTOR ASSEMBLY.	
2	FL. 90° BEND OR TEE WITH HOSE FITTINGS	
2A	DEPENDING ON THE PIPELINE MATERIAL SHOWN ON PLANS, 90° BEND	
	CAN BE FLXPO OR FLXMJ	
3	4 INCH THICK CONCRETE PAD (2000 PSI).	
4	FL. 10 GA CML&C C-150 STEEL SPOOL WITH S.O.W.O. FLANGE.	
5	THRUST BLOCKING (3250 PSI). 560-C-3250	W-19
6	POLYETHYLENE ENCASEMENT	
7	6" MINIMUM DIAMETER - REDUCE DIAMETER IN RISER, ABOVE FINISH	
8	GALV. PIPE SUPPORT; FEE & MASON FIG. 291	
9	TAMPER SWITCH REQUIRED BY FIRE MARSHAL	

REV.	APPROVED	DATE	CARLSBAD MUNICIPAL WATER DISTRICT	
			ABOVE GROUND DOUBLE CHECK VALVE DETECTOR ASSEMBLY	Robert T. Johnson Jr. 7/10/08 CITY ENGINEER DATE
				STANDARD DWG. NO. W-22

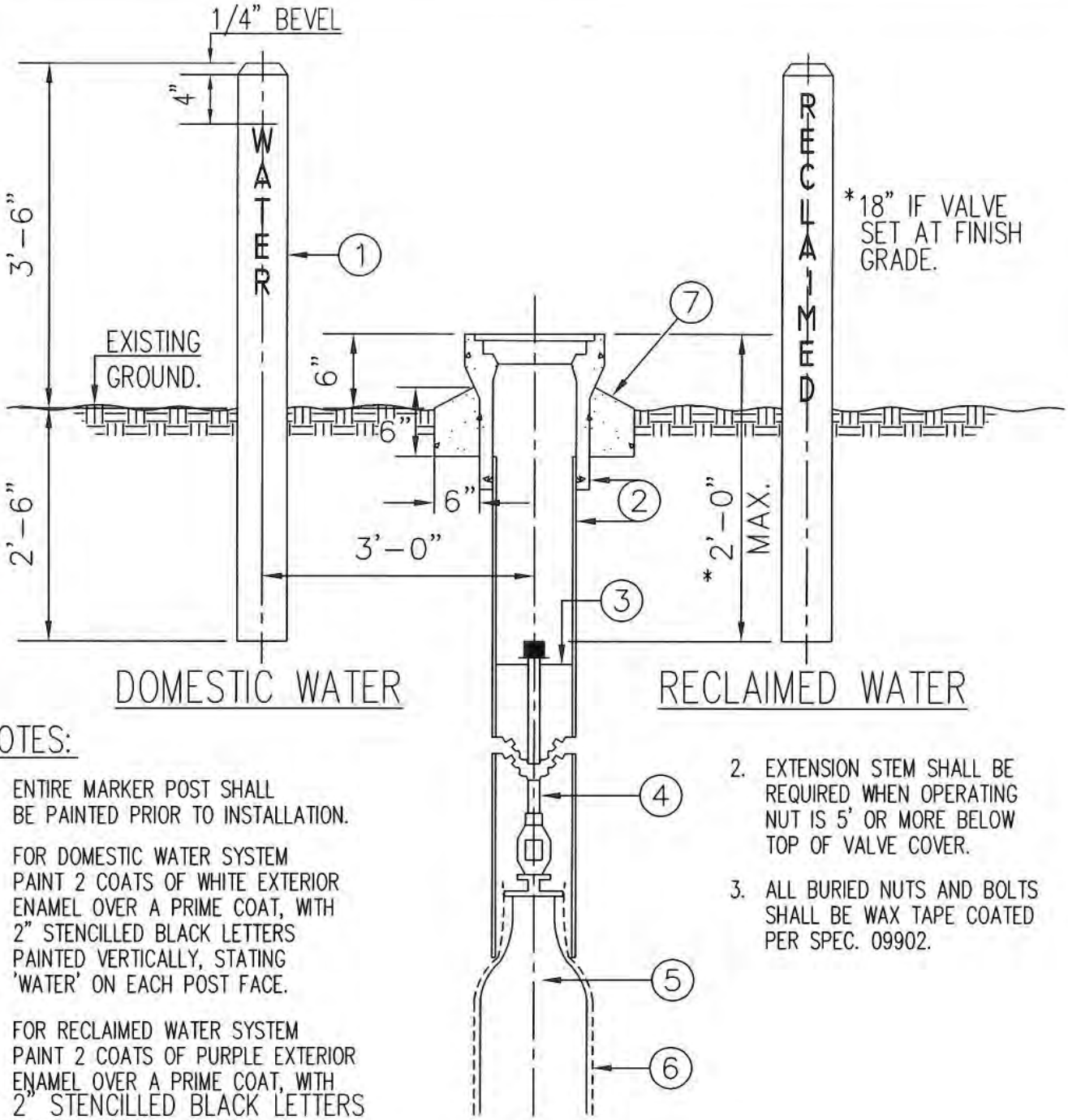

NOTES:

1. ENTIRE MARKER POST SHALL BE PAINTED PRIOR TO INSTALLATION.

   FOR DOMESTIC WATER SYSTEM PAINT 2 COATS OF WHITE EXTERIOR ENAMEL OVER A PRIME COAT, WITH 2" STENCILLED BLACK LETTERS PAINTED VERTICALLY, STATING 'WATER' ON EACH POST FACE.

   FOR RECLAIMED WATER SYSTEM PAINT 2 COATS OF PURPLE EXTERIOR ENAMEL OVER A PRIME COAT, WITH 2" STENCILLED BLACK LETTERS PAINTED VERTICALLY, STATING 'RECLAIMED' ON EACH POST FACE.

2. EXTENSION STEM SHALL BE REQUIRED WHEN OPERATING NUT IS 5' OR MORE BELOW TOP OF VALVE COVER.

3. ALL BURIED NUTS AND BOLTS SHALL BE WAX TAPE COATED PER SPEC. 09902.

ITEM	DESCRIPTION	SPEC/DWG
1	4X4" REDWOOD OR PRESSURE TREATED DOUGLAS FIR (S4S).	
2	VALVE BOX ASSEMBLY.	
3	DISC GUIDE WELDED TO EXTENSION STEM.	
4	NON-RISING EXTENSION STEM W/ SQUARE WRENCH NUT. (COUPLE PER MANU. SPECS.)	
5	GATE VALVE.	
6	POLYETHYLENE ENCASEMENT	
7	CONCRETE ANCHOR COLLAR IF LOCATED IN UNPAVED SURFACE	

REV.	APPROVED	DATE	CARLSBAD MUNICIPAL WATER DISTRICT	
			EXTENSION STEM AND MARKER POST	Robert T. Johnson Jr. 7/10/08 CITY ENGINEER DATE
				STANDARD DWG. NO. W-23

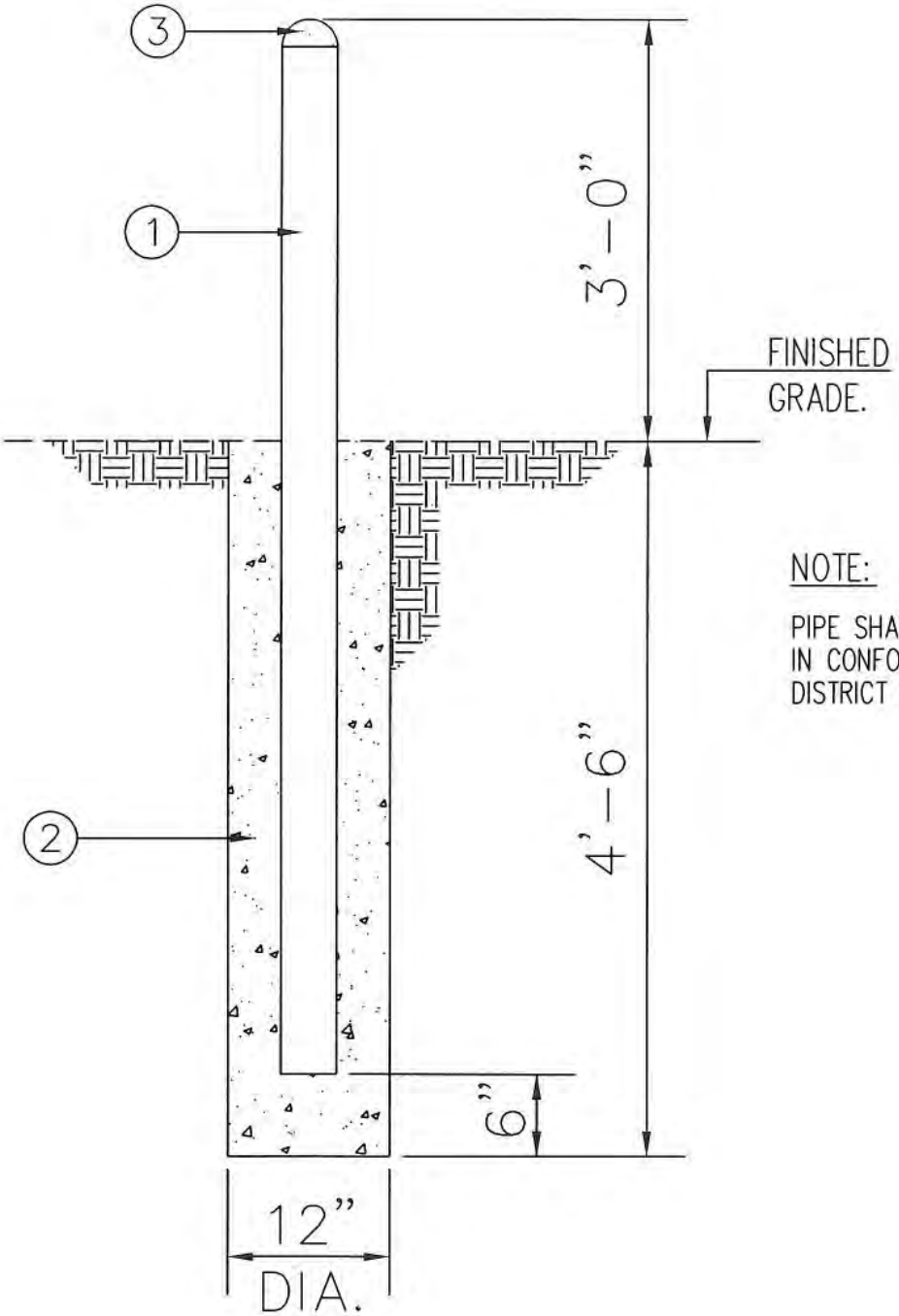

NOTE:

PIPE SHALL BE PAINTED IN CONFORMANCE WITH DISTRICT SPECIFICATIONS.

ITEM	DESCRIPTION	SPEC/DWG
1	4" STEEL PIPE. GALVANIZED / PAINTED	
2	470-C-2000 CONCRETE FOOTING.	
3	FILL PIPE WITH 470-C-2000 CONCRETE (ROUND OFF TOP).	

REV.	APPROVED	DATE	CARLSBAD MUNICIPAL WATER DISTRICT	Robert T. Johnson Jr. 7/10/08
			PROTECTION POST	CITY ENGINEER DATE
				STANDARD DWG. NO. W-24

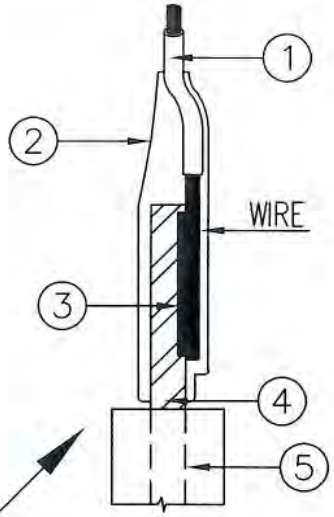

DETAIL A

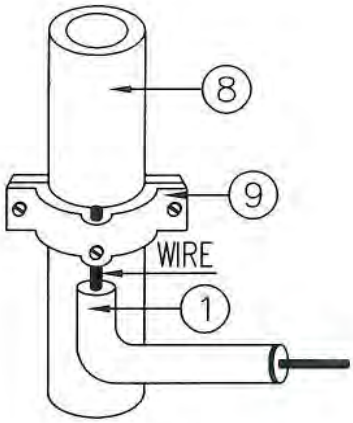

ANODE LEAD
ABOVE GRADE
CONNECTION

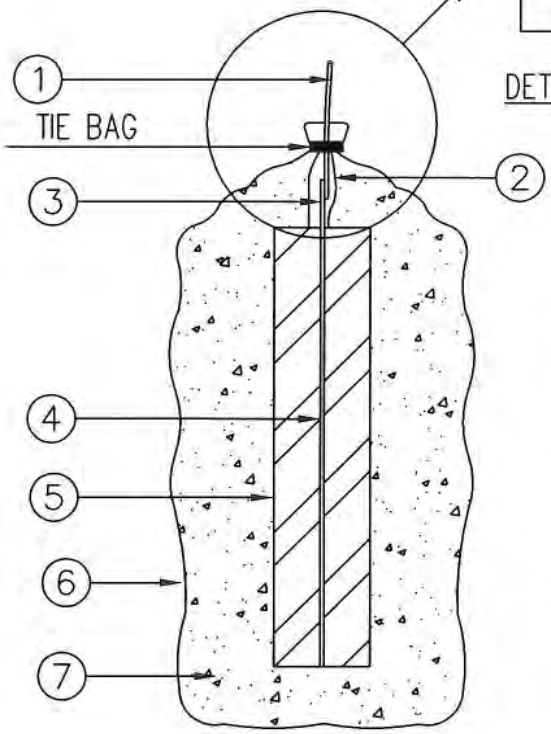

ZINC ANODE

ABOVE GRADE CONNECTION NOTES:

1. RISER PIPE SHALL BE WIRE BRUSHED TO CLEAN BRIGHT METAL.
2. PIPE CLAMP SHALL BE LOCATED ON RISER PIPE.
3. WIRE INSULATION SHALL BE STRIPPED TO A MINIMUM LENGTH TO CONNECT WIRE TO PIPE CLAMP.

PACKAGED BACKFILL COMPOSITION:

75% GYPSUM
20% BENTONITE
5% SODIUM SULFATE

INGOT WEIGHT: 30 LBS.
PKGD. WEIGHT: 70 LBS. APPROX.

ITEM	DESCRIPTION	SPEC/DWG
1	ANODE LEAD NO.12 AWG STRD. COPPER WIRE W/ THW INSULATION.	
2	HEAT SHRINKABLE SLEEVE.	
3	SILVER SOLDER CONNECTION.	
4	1/4" DIAMETER GALVANIZED STEEL CORE.	
5	2"X2"X30" ZINC ALLOY INGOT.	
6	CLOTH BAG.	
7	PACKAGED BACKFILL.	
8	BRASS OR COPPER RISER PIPE.	
9	BRASS OR COPPER PIPE CLAMP WITH SCREW TERMINAL.	

REV.	APPROVED	DATE	CARLSBAD MUNICIPAL WATER DISTRICT	Robert T. Johnson Jr. 7/10/08
			ZINC ANODE AND CONNECTORS FOR 1" AND 2" WATER SERVICE	CITY ENGINEER DATE
				STANDARD DWG. NO. W-25

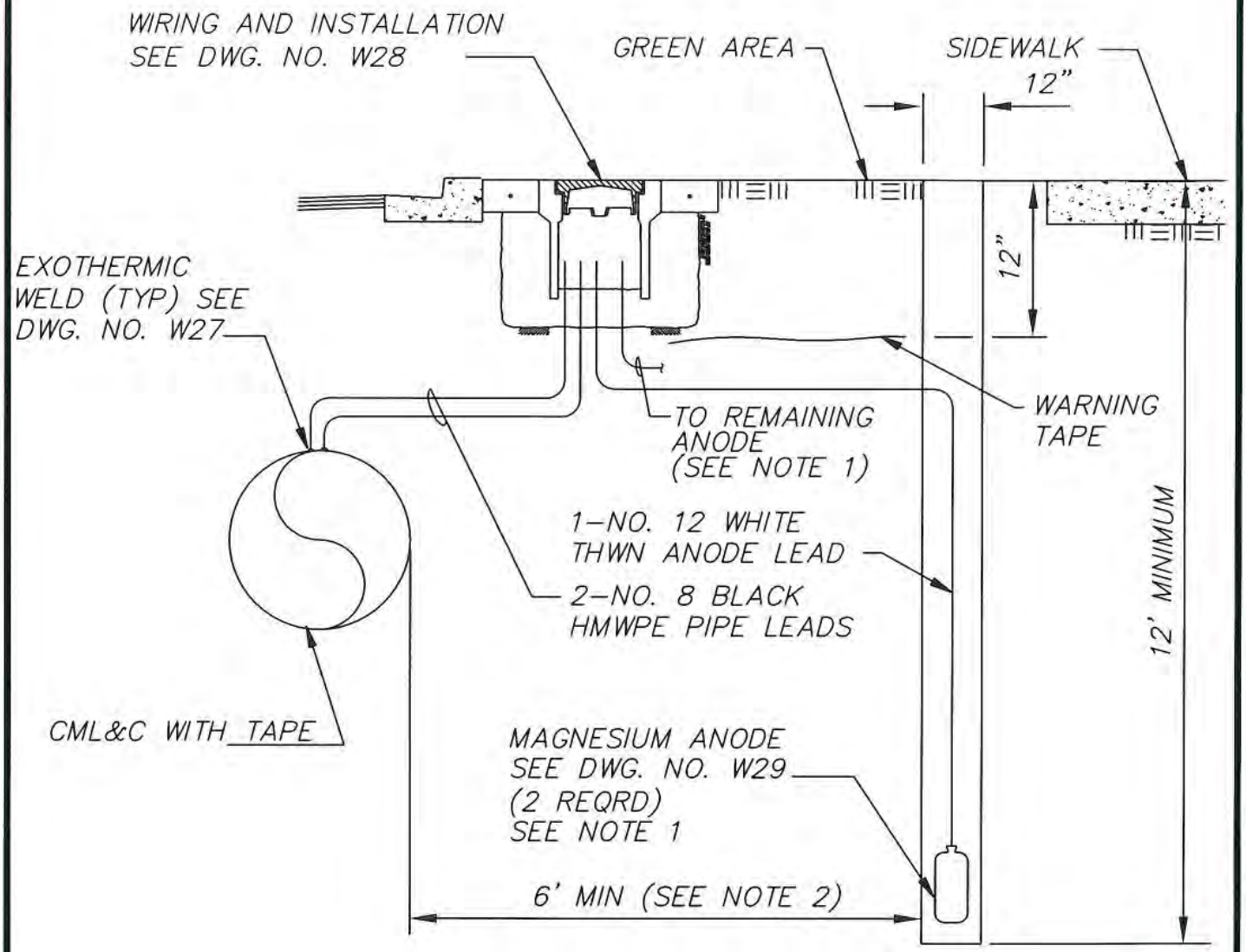

NOTES:

1. 1 ANODE SHOWN, 2 ARE REQUIRED. ANODES TO BE INSTALLED PARALLEL TO THE PIPE, 15 FEET APART IN AUGERED HOLES 12' DEEP. ANODE LEADS TO BE TRENCHED TO CTS AT A DEPTH OF 36".
2. INSTALL ANODES AT A 6' MINIMUM DISTANCE FROM PIPE.

NO SCALE

REV.	APPROVED	DATE	CARLSBAD MUNICIPAL WATER DISTRICT	Robert T. Johnson Jr. 7/10/08
			AT GRADE 2-WIRE TEST STATION WITH ANODES	CITY ENGINEER DATE
				STANDARD DWG. NO. W-26

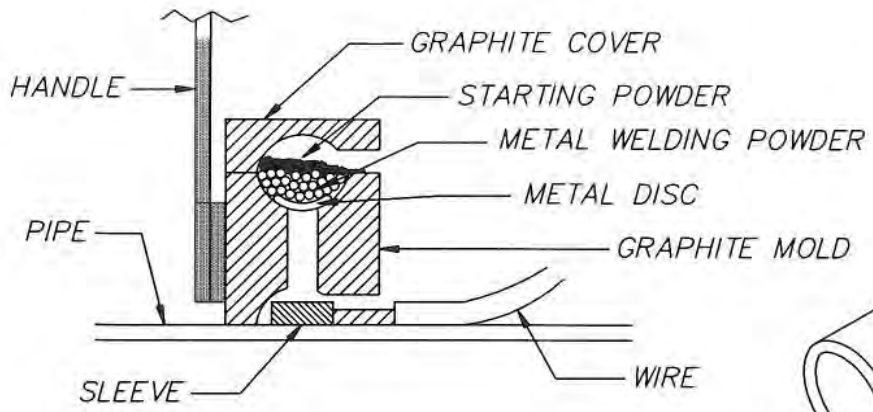

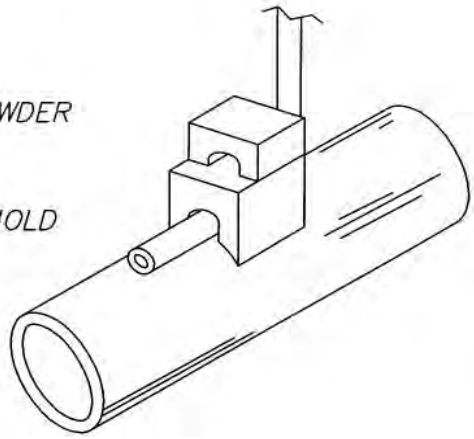

STEP 1. FILE STRUCTURE CONNECTION AREA (3 IN x 3 IN) TO BARE SHINY METAL AND CLEAN.

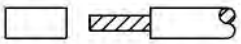

STEP 2. STRIP INSULATION FROM WIRE. ATTACH SLEEVE WHERE REQUIRED BY MANUFACTURER.

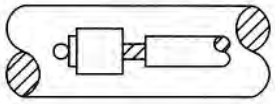

STEP 3. HOLD MOLD FIRMLY WITH OPENING AWAY FROM OPERATOR AND IGNITE WITH FLINT GUN.

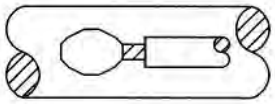

STEP 4. REMOVE SLAG FROM CONNECTION AND PEEN WELD FOR SOUNDNESS.

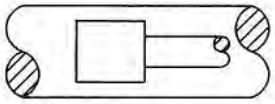

STEP 5. COVER CONNECTION AND EXPOSED STRUCTURE SURFACE WITH A BITUMINOUS COATING COMPOUND. PLACE PLASTIC SHIELD CAP FIRMLY OVER CONNECTION.

NOTES:

1. ALL WIRE WELDS SHALL BE MINIMUM 3 INCHES APART.
2. STANDARD WELD CARTRIDGES SHALL BE USED FOR STEEL SURFACES,

NO SCALE

REV.	APPROVED	DATE	CARLSBAD MUNICIPAL WATER DISTRICT	Robert T. Johnson Jr. 7/10/08
			EXOTHERMIC WELD PROCESS	CITY ENGINEER DATE
				STANDARD DWG. NO. W-27

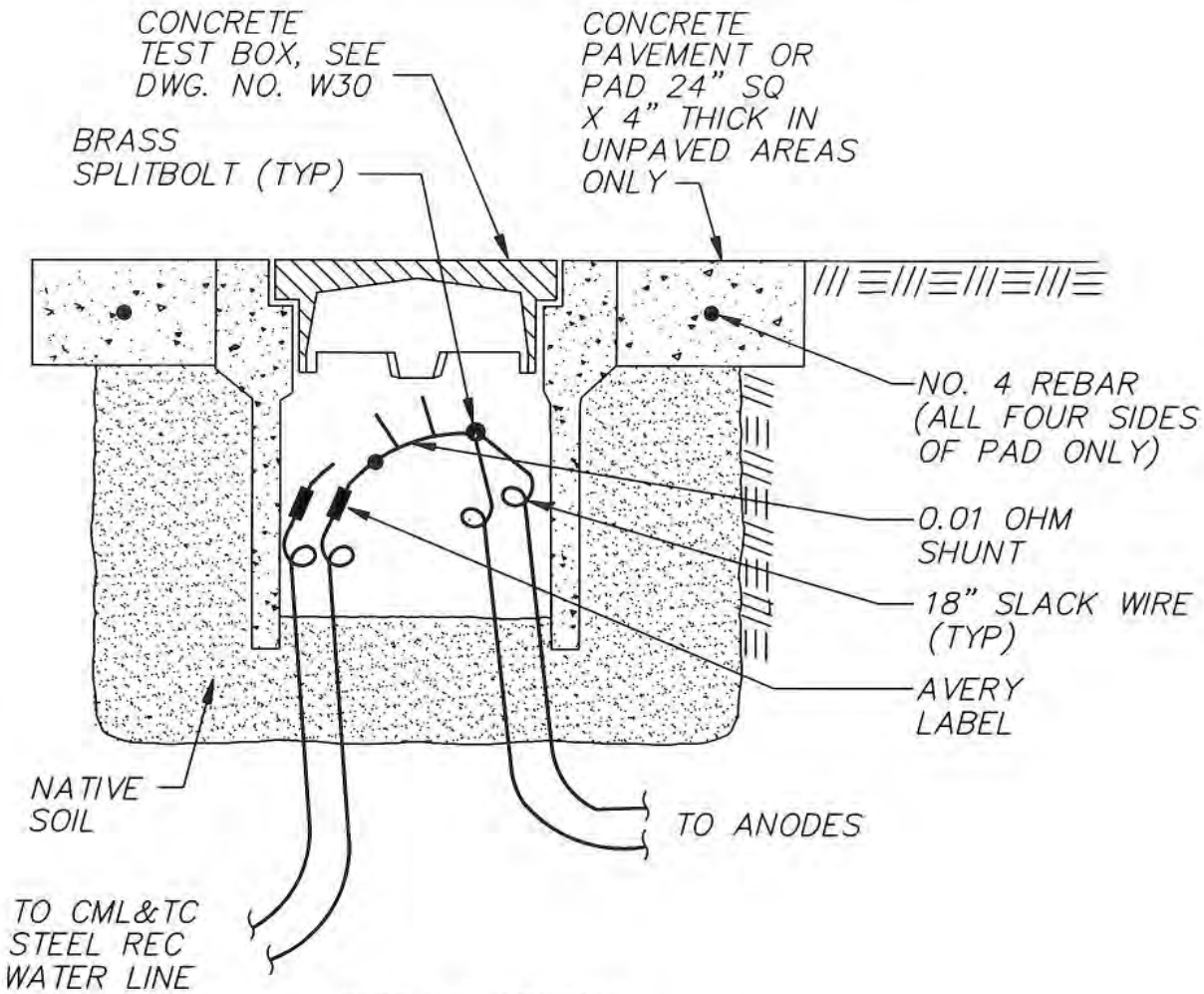

WIRE I.D. LEGEND

WIRE	SIZE	LABEL IDENTIFICATION
A&B	2 – NO 8 HMWPE	STL/CML&TC RW

NOTES:

1. NO WIRE OR CABLE SPLICES ARE PERMITTED EXCEPT AS INDICATED IN THE DRAWINGS OR AS SPECIFICALLY APPROVED BY THE ENGINEER.

2. WIRES SHALL BE TAGGED USING MINIMUM 10 PT. FONT AND CONTAIN:
   PIPELINE MATERIAL & SIZE
   DATE INSTALLED
   PIPELINE STATION NO.

3. PROVIDE 18" SLACK WIRE AT WELD TO PIPE AND COILED IN TEST BOX.

NO SCALE

REV.	APPROVED	DATE	CARLSBAD MUNICIPAL WATER DISTRICT	Robert T. Johnson Jr. 7/10/08 CITY ENGINEER DATE
			2-WIRE TEST STATION WITH ANODES WIRING DIAGRAM	STANDARD DWG. NO. W-28

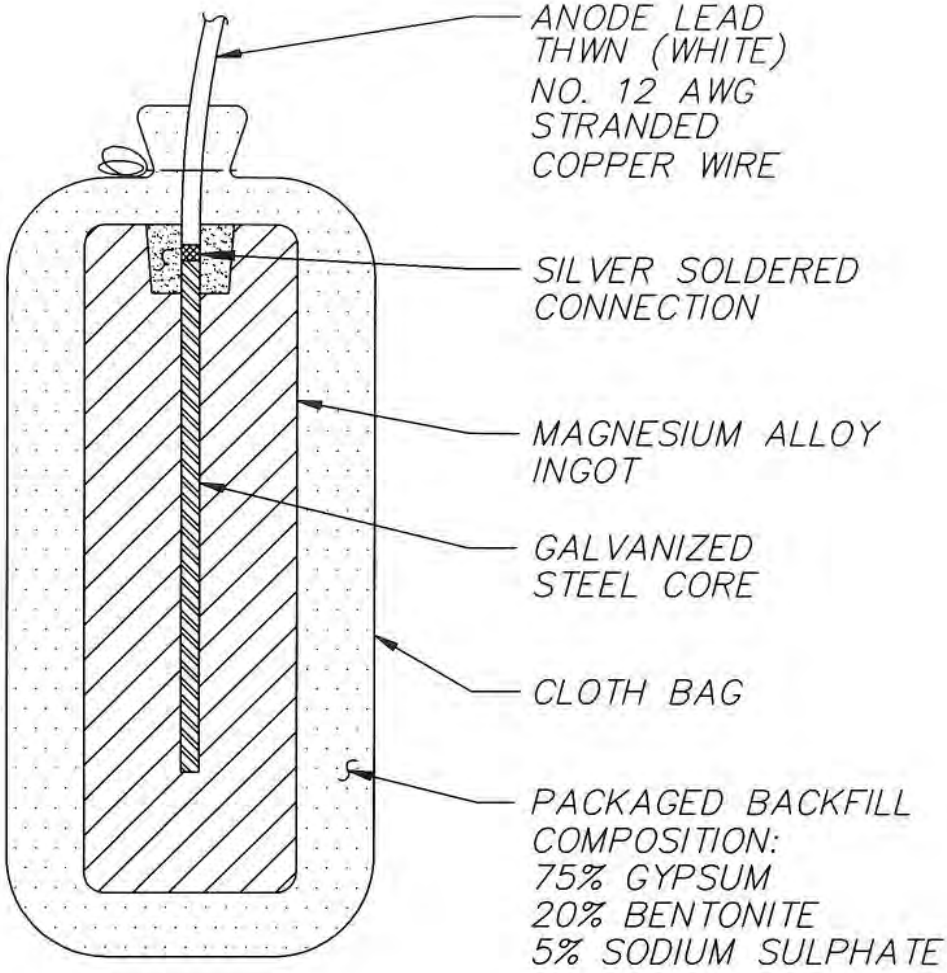

MAGNESIUM INGOT
DIMENSIONS:
5" X 6" X 32" LONG
INGOT WEIGHT: 48 LBS.
PKGD WEIGHT: 105 LBS.
(APPROX.)

CHEMICAL COMPOSITION
(HIGH POTENTIAL)

ELEMENT	CONTENT %
Aluminum	0.010
Manganese	0.50 TO 1.30
Copper	0.02 MAX
Nickle	0.001 MAX
Iron	0.03 MAX
Other	0.05 MAX
Magnesium	BALANCE

NO SCALE

REV.	APPROVED	DATE	CARLSBAD MUNICIPAL WATER DISTRICT	Robert T. Johnson Jr. 7/10/08
			MAGNESIUM ANODE	CITY ENGINEER DATE
				STANDARD DWG. NO. W-29

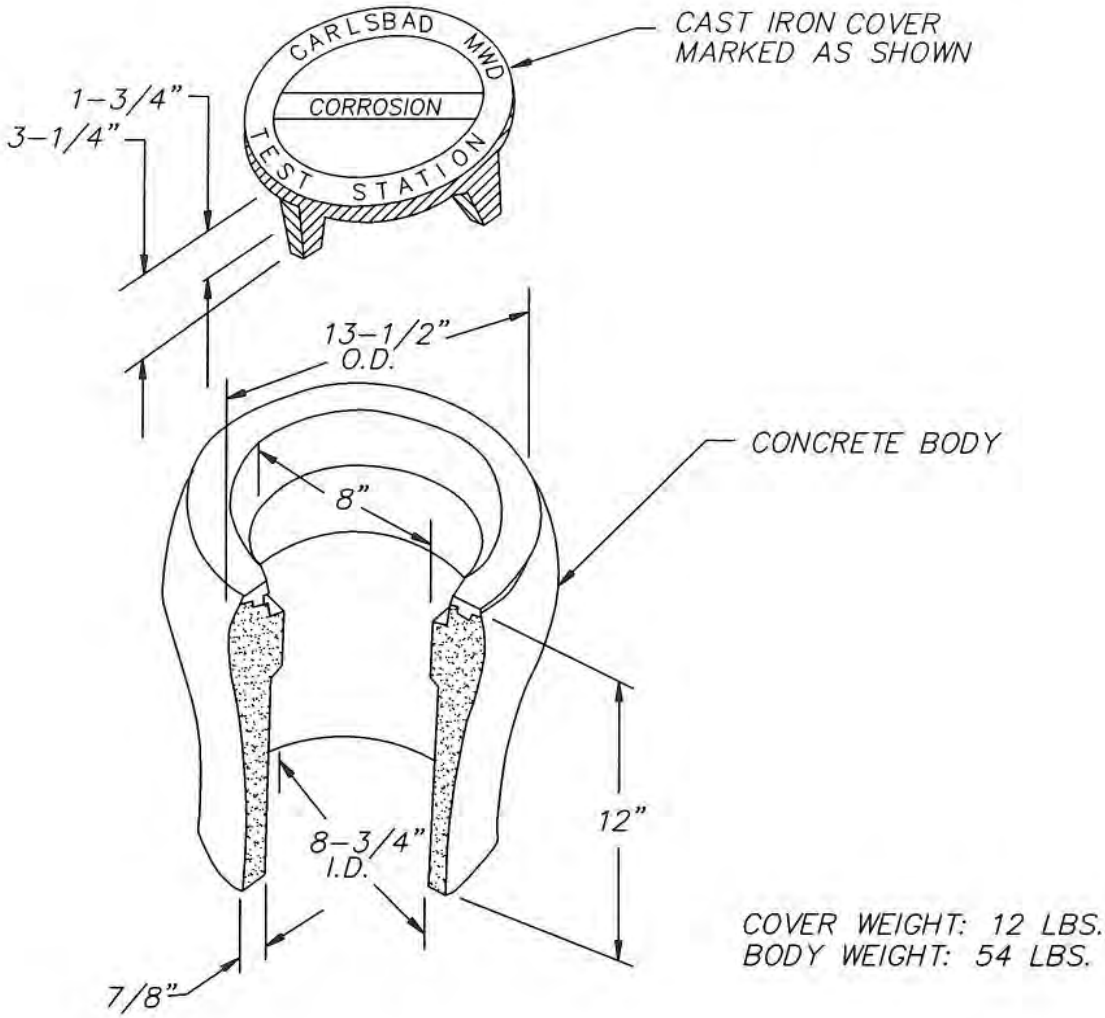

NOTES:

1. ALL AT GRADE TEST STATIONS SHALL BE THE CIRCULAR, CONCRETE, AT-GRADE TYPE WITH A METAL LID.

   A. BOTTOM OF TEST BOX SHALL BE NATIVE SOIL.

   B. A REINFORCED CONCRETE PAD (24" SQUARE X 4" THICK) IS REQUIRED AROUND TEST BOXES LOCATED IN UNPAVED AREAS.

   C. PLACE TEST BOX BEHIND SIDEWALK WITH APPROVAL OF CITY OF CARLSBAD. DO NOT PLACE IN STREET OR MEDIAN.

NO SCALE

REV.	APPROVED	DATE	CARLSBAD MUNICIPAL WATER DISTRICT	Robert T. Johnson Jr. 2/10/08
			CONCRETE TEST BOX	CITY ENGINEER DATE
				STANDARD DWG. NO. W-30

INSULATING MATERIALS:

GASKET – TYPE "E" G10 GLASS W/ RECT. O-RING
SLEEVE – G10 GLASS
WASHER – G10 GLASS

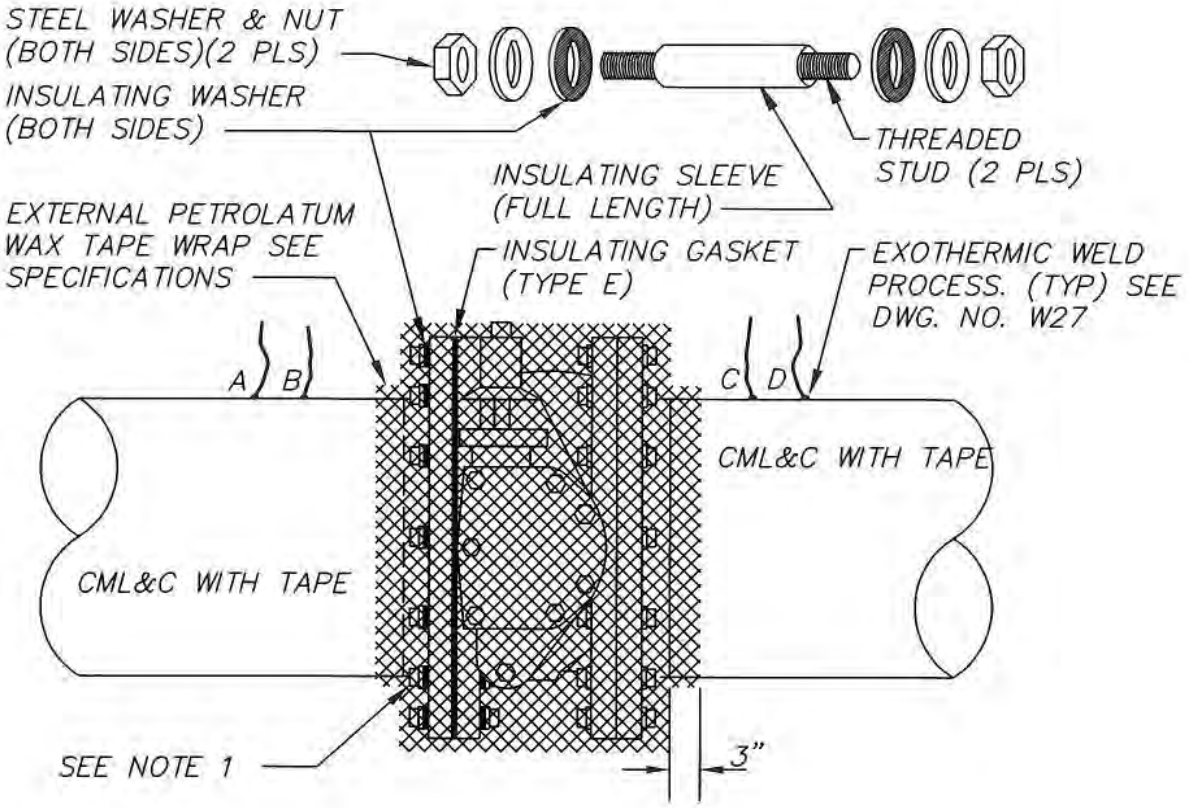

NOTES:

1. FULL LENGTH INSULATING SLEEVES REQUIRED AT ALL THRU-FLANGE BOLTS OR STUDS. HALF LENGTH SLEEVES REQUIRED AT THREADED BOLT HOLES AT VALVE BONNET AND BASE.
2. INSTALL TEST BOX BEHIND CURB SIMILAR TO DETAIL 1 ON THIS SHEET.

NO SCALE

REV.	APPROVED	DATE	CARLSBAD MUNICIPAL WATER DISTRICT	Robert T. Johnson Jr. 2/10/08 CITY ENGINEER DATE
			BURIED INSULATING FLANGE	STANDARD DWG. NO. W-31

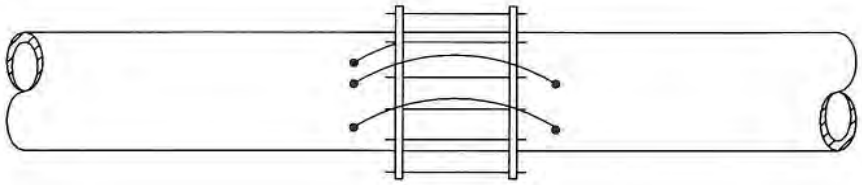

FLEXIBLE COUPLING

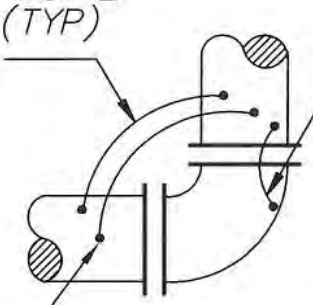

BEND

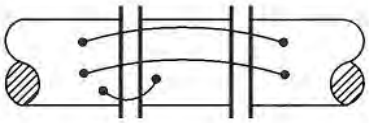

SPOOL

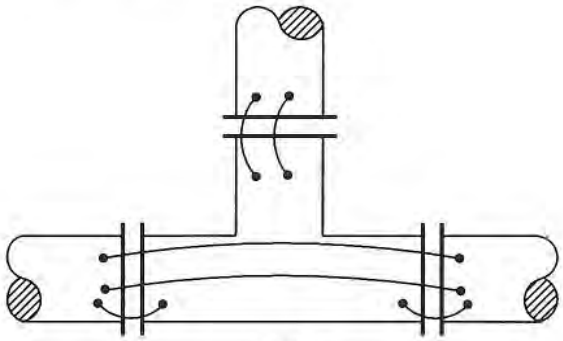

TEE

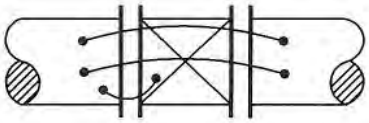

VALVE

NOTES:

1. ALL WIRE WELDS SHALL BE 3" APART MIN.
2. ALL BOND WIRES SHALL BE INSTALLED AT MINIMUM LENGTHS.
3. BOND WIRES SHALL NOT BE INSTALLED ACCROSS INSULATING JOINTS.
4. BOND WIRE SIZE SHALL BE AWG NO 2. TWO ARE REQUIRED. ONE NO. 6 AWG HMWPE IS REQUIRED FROM PIPE TO VALVE BODY, SPOOL, COUPLING, AND TEE.

NO SCALE

REV.	APPROVED	DATE	CARLSBAD MUNICIPAL WATER DISTRICT	Robert T. Johnson Jr. 7/10/08
			MECHANICAL JOINT BOND	CITY ENGINEER DATE
				STANDARD DWG. NO. W-32

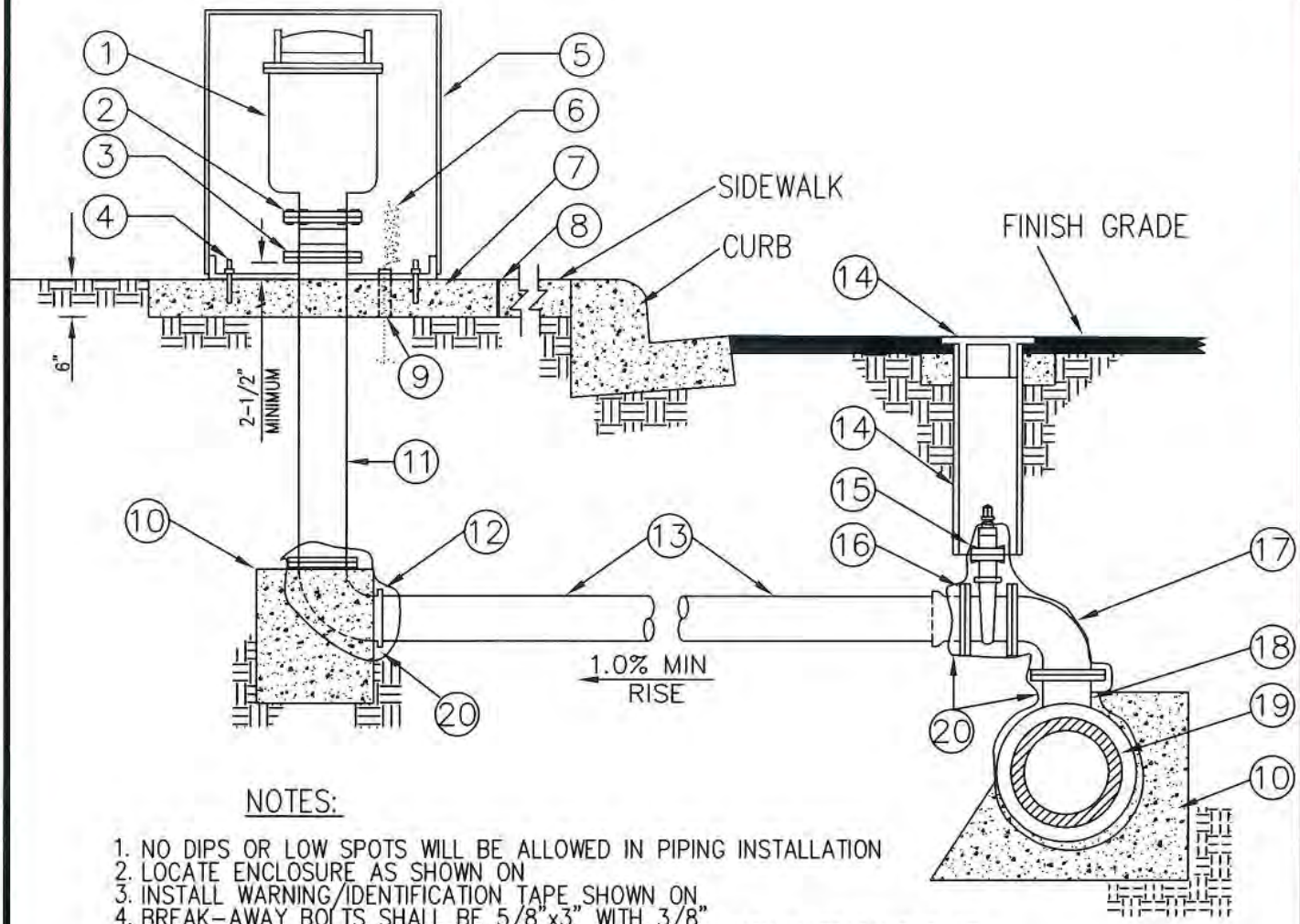

NOTES:

1. NO DIPS OR LOW SPOTS WILL BE ALLOWED IN PIPING INSTALLATION
2. LOCATE ENCLOSURE AS SHOWN ON
3. INSTALL WARNING/IDENTIFICATION TAPE SHOWN ON
4. BREAK-AWAY BOLTS SHALL BE 5/8"x3" WITH 3/8" HOLE DRILLED IN THE SHAFT OF THE BOLT. INSTALL WITH NUTS ON TOP OF THE FLANGE. BOLTS SHAFT SHALL BE FILLED WITH SILICONE SEALANT.
5. AIR AND VACUM VALVES INSTALLED FOR THE USE OF RECYCLED WATER SHALL BE IDENTIFIED AS DESCRIBED IN SECTION 15151 OF THE SPECIFICATIONS
6. CONNECTIONS TO STEEL MAINS SHALL BE IN ACCORDANCE WITH SECTION 15061
7. MATERIALS SHALL BE SELECTED FROM THE APPROVED MATERIALS LIST

ITEM	DESCRIPTION	ITEM	
1	4" AUTOMATIC COMBINATION AIR RELEASE & AIR /VACUUM VALVE ASSEMBLY	10	CONCRETE THRUST/ANCHOR BLOCK
2	BREAK-AWAY BOLTS, SEE NOTE 5	11	4" FLD DI PIPE x REQUIRED LENGTH (MAXIMUM OF 2 SPOOLS)
3	4"x8" LONG FLG'D 8-BOLT SPOOL WITH BREAK-OFF GROOVES	12	4" FLG x MJ/PO 90° BEND
		13	4" C-900 PVC PIPE
4	1/2"x3" STAINLESS STEEL DROP-IN ANCHORS (3 EA @120° APART)	14	8" GATE WELL
		15	4" FLG x MJ/PO/FLG RWCV
5	AVA ASSEMBLY ENCLOSURE	16	4" FLG x MJ/PO 90° ADAPTER (IF REQUIRED)
6	TRACER WIRE (IF REQUIRED)		
7	42"x42"x6" THICK CONCRETE SLAB	17	4" FLANGE 90° BEND
		18	4" MJ/PO/FLG x FLG TEE
8	COLD JOINT STRIP	19	WATER MAIN
9	1" PVC CONDUIT FOR TRACER WIRE INSTALLED 2" ABOVE SLAB	20	POLYETHYLENE ENCASEMENT & WAX TAPE WRAP BURIED NUTS & BOLTS PER SPEC. 09902

REV.	APPROVED	DATE	CARLSBAD MUNICIPAL WATER DISTRICT	Robert T. Johnson Jr. 7/10/08
			4" AUTOMATIC COMBINATION AIR RELEASE & AIR/VACUUM VALVE INSTALLATIONS	CITY ENGINEER DATE
				STANDARD DWG. NO. W-33

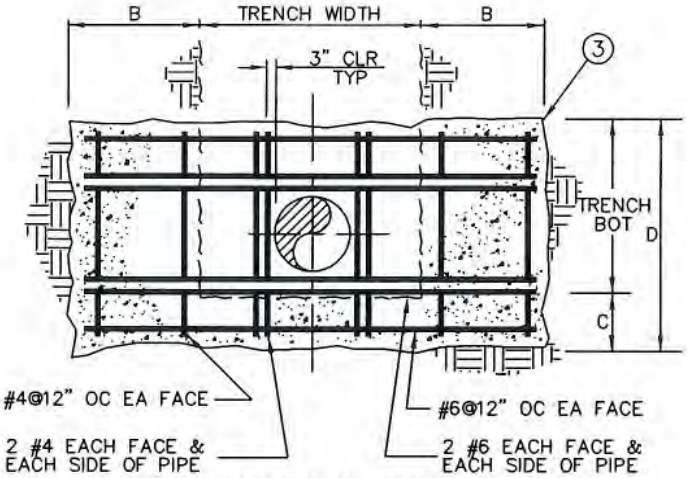

ANCHOR BLOCK SECTION

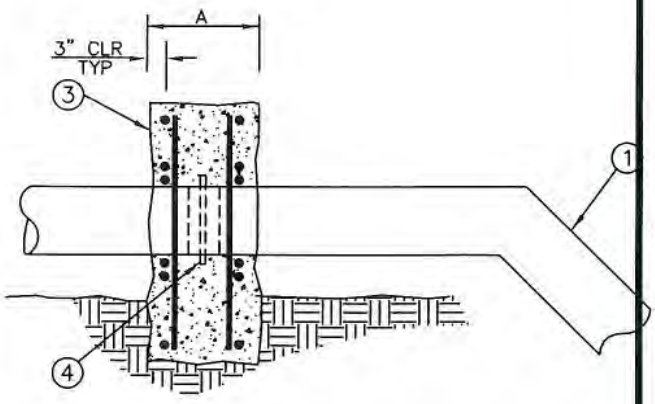

ANCHOR BLOCK ELEVATION

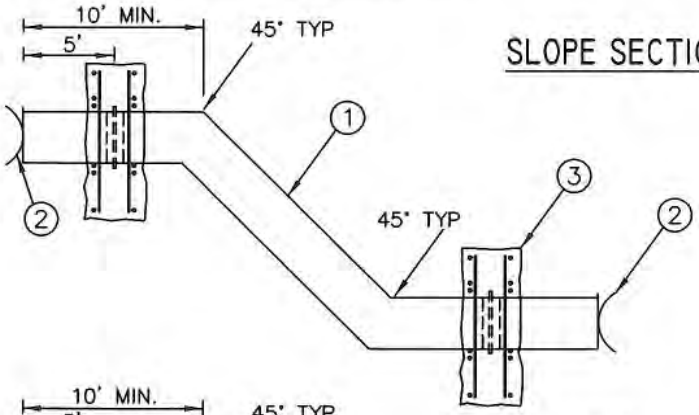

SLOPE SECTION

PIPE SIZE	A	B	C	D
4"	ALL DIMENSIONS			
6"	CALCULATED			
8"	BY ENGINEER			
10"	AND SUBMITTED			
12"	FOR APPROVAL			

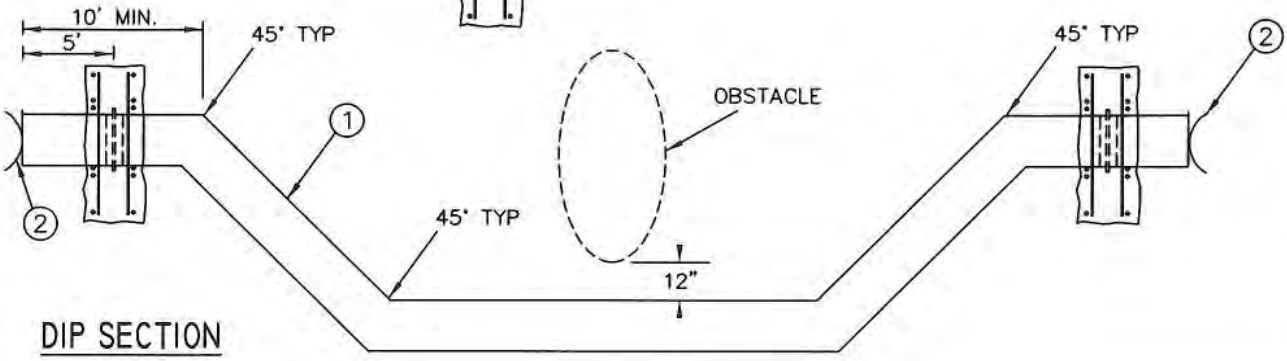

DIP SECTION

ITEM	DESCRIPTION	SPEC/DWG
1	STEEL PIPE, CML&C, WELDED JOINTS	
2	FLANGE X PUSH JOINT ADAPTOR	
3	CONCRETE ANCHOR BLOCK WITH REINFORCING STEEL	
4	1" THICK X 3" HIGH WELD STL RING	

REV.	APPROVED	DATE	CARLSBAD MUNICIPAL WATER DISTRICT	Robert T. Johnson Jr. 7/10/04
			WELDED STEEL PIPE SECTION WITH THRUST WALLS FOR SLOPES AND DIPS	CITY ENGINEER DATE
				STANDARD DWG. NO. W-34

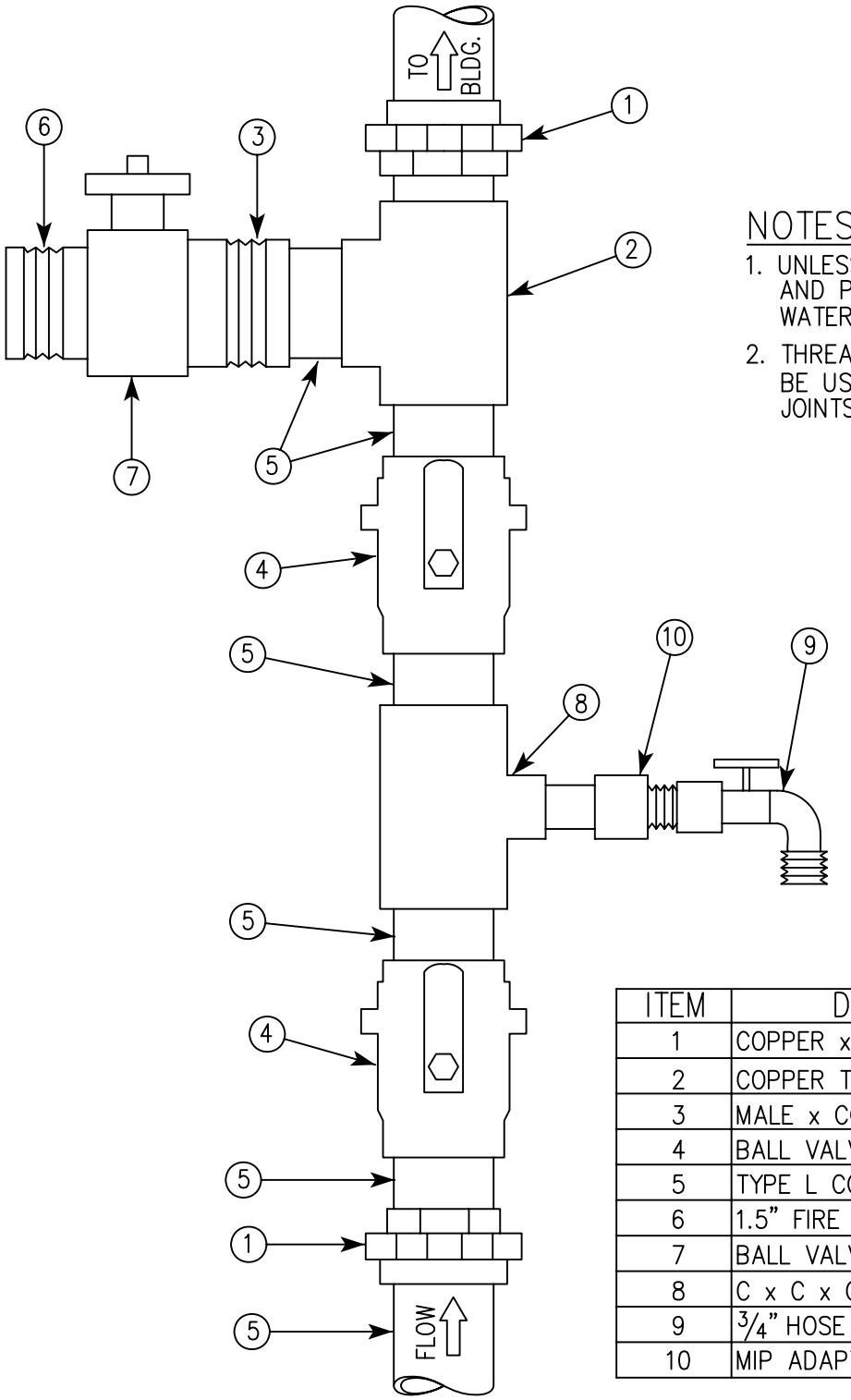

NOTES:

1. UNLESS SPECIFIED OTHERWISE, FITINGS AND PIPE SIZES SHALL MATCH WATER SERVICE DIAMETER.
2. THREADED JOINT FITTINGS (NPT) MAY BE USED IN PLACE OF SOLDERED JOINTS SHOWN ON THIS DRAWING.

ITEM	DESCRIPTION (SEE NOTES)
1	COPPER x COPPER UNION
2	COPPER TEE
3	MALE x COPPER ADAPTER
4	BALL VALVE WITH HAND LEVER
5	TYPE L COPPER
6	1.5" FIRE HOSE FITTING
7	BALL VALVE WITH PADLOCK WING
8	C x C x C TEE
9	3/4" HOSE BIB OR TEST COCK
10	MIP ADAPTER

ITEM	DESCRIPTION	SPEC/DWG

REV.	APPROVED	DATE

CARLSBAD MUNICIPAL WATER DISTRICT

BYPASS TEE
FOR RECYCLED WATER TESTING

Glen R. Van Peski 12/11
CITY ENGINEER DATE

STANDARD DWG. NO. W-35

GENERAL NOTES

1. THIS PLAN SUPERSEDES ALL OTHER PLANS PREVIOUSLY APPROVED BY THE CITY OF CARLSBAD REGARDING IMPROVEMENTS SHOWN ON THIS SET OF PLANS.
2. APPROVAL OF THIS PLAN DOES NOT LESSEN OR WAIVE ANY PORTION OF THE CARLSBAD MUNICIPAL CODE, RESOLUTION OF CONDITIONAL APPROVAL, CITY STANDARDS OR OTHER ADDITIONAL DOCUMENTS LISTED HEREON AS THEY MAY PERTAIN TO THIS PROJECT. THE ENGINEER IN RESPONSIBLE CHARGE SHALL REVISE THESE PLANS WHEN NON-CONFORMANCE IS DISCOVERED.
3. CITY APPROVAL OF PLANS DOES NOT RELIEVE THE DEVELOPER OR ENGINEER-OF-WORK FROM RESPONSIBILITY FOR THE CORRECTION OF ERRORS AND OMISSIONS DISCOVERED DURING CONSTRUCTION. ALL PLAN REVISIONS SHALL BE PROMPTLY SUBMITTED TO THE CITY ENGINEER FOR APPROVAL.
4. A RIGHT-OF-WAY PERMIT FROM THE CITY ENGINEER WILL BE REQUIRED FOR ANY WORK IN THE PUBLIC RIGHT OF WAY. PRIOR TO PERMIT ISSUANCE, A CERTIFICATE OF INSURANCE AS WELL AS ADDITIONAL INSURED ENDORSEMENT MUST BE FILED NAMING THE CITY OF CARLSBAD AS AN ADDITIONAL INSURED ON THE PERMITTEE'S POLICY IN THE MINIMUM AMOUNT OF $1,000,000.00 FOR EACH OCCURRENCE OF LIABILITY. THE INSURANCE COMPANY WRITING THE POLICY MUST HAVE A RATING OF "A-" OR BETTER AND A SIZE CATEGORY OF CLASS V OR BETTER AS ESTABLISHED BY "BESTS" KEY RATING GUIDE.
5. NO WORK SHALL BE COMMENCED UNTIL ALL PERMITS HAVE BEEN OBTAINED FROM THE CITY AND OTHER APPROPRIATE AGENCIES.
6. REVISION OF THESE PLANS MAY BE REQUIRED IF THE PROPOSED IMPROVEMENTS ARE NOT CONSTRUCTED PRIOR TO THE DEADLINE DATE OF THE IMPROVEMENT AGREEMENT.
7. NO REVISIONS WILL BE MADE TO THESE PLANS WITHOUT THE WRITTEN APPROVAL OF THE CITY ENGINEER, NOTED WITHIN THE REVISION BLOCK, ON THE APPROPRIATE SHEET OF THE PLANS AND TITLE SHEET.
8. ORIGINAL DRAWINGS SHALL BECOME THE PROPERTY OF THE CITY UPON BEING SIGNED BY THE CITY ENGINEER.
9. THE ORIGINAL DRAWING SHALL BE REVISED TO REFLECT AS-BUILT CONDITIONS BY THE ENGINEER-OF-WORK PRIOR TO FINAL ACCEPTANCE OF THE WORK BY THE CITY.
10. ACCESS FOR FIRE AND OTHER EMERGENCY VEHICLES SHALL BE MAINTAINED TO THE PROJECT SITE AT ALL TIMES DURING CONSTRUCTION.
11. WHERE TRENCHES ARE WITHIN CITY EASEMENTS, A SOILS REPORT COMPRISED OF: (A) SUMMARY SHEET, (B) LABORATORY WORK SHEETS AND (C) COMPACTION CURVES SHALL BE SUBMITTED BY A PROFESSIONAL ENGINEER OF THE STATE OF CALIFORNIA, PRINCIPALLY DOING BUSINESS IN THE FIELD OF APPLIED SOILS MECHANICS. THE SOILS REPORT WILL BE SUBMITTED TO THE CITY ENGINEERING INSPECTOR WITHIN TWO WORKING DAYS OF COMPLETION OF FIELD TESTS. THE WRITTEN FIELD COMPACTION REPORTS SHALL BE IMMEDIATELY SUBMITTED TO THE CITY ENGINEERING INSPECTOR UPON COMPLETION OF THE FIELD TESTS.
12. A PRECONSTRUCTION MEETING SHALL BE HELD AT THE SITE PRIOR TO THE BEGINNING OF WORK AND SHALL BE ATTENDED BY ALL REPRESENTATIVES RESPONSIBLE FOR CONSTRUCTION, INSPECTION, SUPERVISION, TESTING AND ALL OTHER ASPECTS OF THE WORK. THE CONTRACTOR SHALL SCHEDULE THE MEETING BY CALLING (760) 438-3891 AT LEAST FIVE(5) WORKING DAYS PRIOR TO STARTING CONSTRUCTION. APPROVED DRAWINGS MUST BE AVAILABLE PRIOR TO SCHEDULING. THE GRADING PERMIT WILL BE PROVIDED BY THE PROJECT INSPECTOR AT THE MEETING.
13. ALL INSPECTION REQUESTS, OTHER THAN FOR PRECONSTRUCTION MEETING WILL BE MADE BY CALLING THE INSPECTION LINE [illegible] HOURS PRIOR TO THE TIME THE INSPECTION IS REQUESTED. REQUESTS MADE AFTER 3:00 P.M. WILL BE SCHEDULED FOR TWO FULL WORK DAYS LATER.
14. THE OWNER AND/OR APPLICANT THROUGH THE DEVELOPER AND/OR CONTRACTOR SHALL DESIGN, CONSTRUCT AND MAINTAIN ALL SAFETY DEVICES, INCLUDING SHORING, AND SHALL BE SOLELY RESPONSIBLE FOR CONFORMING TO ALL LOCAL, STATE AND FEDERAL SAFETY AND HEALTH STANDARDS, LAWS AND REGULATIONS.
15. THE CONTRACTOR SHALL CONFORM TO LABOR CODE SECTION 6705 BY SUBMITTING A DETAIL PLAN TO THE CITY ENGINEER AND/OR CONSULTANT SHOWING THE DESIGN OF SHORING, BRACING, SLOPING OR OTHER PROVISIONS TO BE MADE OF WORKER PROTECTION FROM THE HAZARD OF CAVING GROUND DURING THE EXCAVATION OF SUCH TRENCH OR TRENCHES OR DURING THE ERECTION OF FORMS OR THEREIN. THE PLAN MUST BE PREPARED FOR ALL TRENCHES FIVE FEET (5') OR MORE IN DEPTH AND APPROVED BY THE CITY ENGINEER AND/OR CONSULTING AGENCY PRIOR TO EXCAVATION. IF THE PLAN VARIES FROM THE SHORING SYSTEM STANDARDS ESTABLISHED BY THE CONSTRUCTION SAFETY ORDERS OF CALIFORNIA ADMINISTRATIVE CODE, THE PLAN SHALL BE PREPARED BY A REGISTERED ENGINEER AT THE CONTRACTORS EXPENSE. A COPY OF THE CSHA EXCAVATION PERMIT MUST BE SUBMITTED TO THE INSPECTOR PRIOR TO EXCAVATION.
16. IF ANY ARCHAEOLOGICAL RESOURCES ARE DISCOVERED WITHIN ANY WORK ZONE DURING CONSTRUCTION, OPERATIONS WILL CEASE IMMEDIATELY, AND THE PERMITTEE WILL NOTIFY THE CITY ENGINEER. OPERATIONS WILL NOT RESTART UNTIL THE PERMITTEE HAS RECEIVED WRITTEN AUTHORITY FROM THE CITY ENGINEER TO DO SO.
17. ALL OPERATIONS CONDUCTED ON THE SITE OR ADJACENT THERETO, INCLUDING WARMING UP, REPAIR, ARRIVAL, DEPARTURE OR OPERATION OF TRUCKS, EARTHMOVING EQUIPMENT, CONSTRUCTION EQUIPMENT AND ANY OTHER ASSOCIATED GRADING EQUIPMENT SHALL BE LIMITED TO THE PERIOD BETWEEN 7:00 A.M. AND SUNSET EACH DAY, MONDAY THRU FRIDAY AND NO EARTHMOVING OR GRADING OPERATIONS SHALL BE CONDUCTED ON WEEKENDS OR HOLIDAYS. (A LIST OF CITY HOLIDAYS IS AVAILABLE AT THE ENGINEERING DEPARTMENT COUNTER.)
18. ALL OFF-SITE HAUL ROUTES SHALL BE SUBMITTED BY THE CONTRACTOR TO THE CITY ENGINEER FOR APPROVAL TWO FULL WORKING DAYS PRIOR TO COMMENCEMENT OF WORK. THE CITY ENGINEER HAS THE AUTHORITY TO PROHIBIT THE USE OF CERTAIN ROADWAYS WHEN THEIR USE WOULD BE HAZARDOUS TO THE PUBLIC OR CAUSE SERIOUS NUISANCE.
19. NO BLASTING SHALL BE COMMENCED WITHOUT A CITY ENGINEER APPROVED BLASTING PROGRAM.
20. THE EXISTENCE AND LOCATION OF UTILITY STRUCTURES AND FACILITIES SHOWN ON THE CONSTRUCTION PLANS WERE OBTAINED BY A SEARCH OF THE AVAILABLE RECORDS. ATTENTION IS CALLED TO THE POSSIBLE EXISTENCE OF OTHER UTILITY FACILITIES OR STRUCTURES NOT SHOWN OR IN A LOCATION DIFFERENT FROM THAT SHOWN ON THE PLANS. THE CONTRACTOR IS REQUIRED TO TAKE THE PRECAUTIONARY MEASURES TO PROTECT THE UTILITIES SHOWN ON THE PLANS AND ANY OTHER EXISTING FACILITIES OR STRUCTURES NOT SHOWN.
21. THE CONTRACTOR SHALL VERIFY THE LOCATION OF ALL EXISTING FACILITIES (ABOVEGROUND AND UNDERGROUND) WITHIN THE PROJECT SITE SUFFICIENTLY AHEAD OF THE CONSTRUCTION TO PERMIT THE REVISIONS OF THE CONSTRUCTION PLANS IF IT IS FOUND THAT THE ACTUAL LOCATIONS ARE IN CONFLICT WITH THE PROPOSED WORK.
22. THE CONTRACTOR SHALL NOTIFY AFFECTED UTILITY COMPANIES (SEE BELOW) AT LEAST 2 FULL WORKING DAYS PRIOR TO STARTING GRADING NEAR THEIR FACILITIES AND SHALL COORDINATE THE WORK WITH A COMPANY REPRESENTATIVE.

UNDERGROUND SERVICE ALERT	(800)422-4133
SDG&E	(800)660-7343
SBC (PACIFIC BELL)	(800)892-0123
ADELPHIA CABLE COMMUNICATIONS	(760)438-7741
COX COMMUNICATIONS	(760)806-9809
CITY OF CARLSBAD(STREETS & STORM DRAIN)	(760)434-2980
*CITY OF CARLSBAD(SEWER,WATER & RECLAIMED WATER)	(760)438-2722
*SAN DIEGUITO WATER DISTRICT	(760)633-2650
*LEUCADIA WASTEWATER DISTRICT	(760)753-0155
*VALLECITOS WATER DISTRICT	(760)744-0460
*OLIVENHAIN WATER DISTRICT	(760)753-6466
*BUENA SANITATION DISTRICT	(760)726-1340

*AS APPROPRIATE

STREET NOTES

1. ACTUAL STRUCTURAL SECTIONS WILL BE DETERMINED AFTER "R" VALUE TESTS HAVE BEEN CONDUCTED BY A PROFESSIONAL ENGINEER OF THE STATE OF CALIFORNIA, PRINCIPALLY DOING BUSINESS IN THE FIELD OF APPLIED SOIL MECHANICS, ON THE PREPARED BASEMENT SOIL. THE "R" VALUE TESTS AND THE ENGINEERED STRUCTURAL SECTION MUST BE SUBMITTED TO THE ENGINEERING INSPECTOR FOR REVIEW AND APPROVAL A MINIMUM OF TWO (2) CITY WORKING DAYS BEFORE THE WORK BEGINS.
2. STREET LIGHTS SHALL BE INSTALLED AS SHOWN ON THESE PLANS.UNDERGROUND CONDUIT RUNS, SERVICE POINTS AND HAND-HOLES SHALL BE SHOWN ON THE "AS-BUILT" PLANS. NO DIRECT BURIAL STREET LIGHT FOUNDATIONS WILL BE ALLOWED. ALL LUMINAIRES SHALL BE "CUT OFF" TYPE.
3. ALL UNDERGROUND UTILITIES AND LATERALS SHALL BE INSTALLED PRIOR TO CONSTRUCTION OF CURBS, CROSS GUTTERS OR SURFACING OF STREETS.
4. STORM DRAIN PIPE SHALL BE REINFORCED CONCRETE PIPE WITH A MINIMUM D-LOAD OF 1,350. FOR PRIVATE STORM DRAIN PIPES, UP TO 15" PVC MAY BE UTILIZED PROVIDED DEPTH IS LESS THAN 15 FEET AND BACKFILLED WITH 3/4" ROCK PER SDRSD S-4 TYPE "C" AND PIPE MEETS ASTM STANDARD 3034 FOR SDR 35 SOLID WALL PIPE.
5. WHERE AN EXISTING PIPE LINE IS TO BE ABANDONED IT SHALL BE REMOVED WITHIN TWENTY FEET OF BUILDING OR STREET AREAS AND REPLACED WITH PROPERLY COMPACTED SOILS. IN OTHER AREAS THE PIPE WILL BE PLUGGED WITH CONCRETE OR REMOVED AS APPROVED BY THE CITY ENGINEER.
6. WHEELCHAIR RAMPS SHALL BE INSTALLED PER REQUIREMENTS OF TITLE 24, CALIFORNIA ADMINISTRATIVE CODE.
7. STREET TREES SHALL BE INSTALLED PER SECTION IV D.3 OF THE CITY OF CARLSBAD LANDSCAPE MANUAL AND LOCAL RESIDENTIAL STREET STANDARDS.
8. FIRE HYDRANT MARKERS SHALL BE PLACED IN THE STREET WITHIN THE LIMITS OF WORK OF THIS PLAN PER SDRS DWG M19.
9. ALL SURVEY MONUMENTS AND POINTS THAT ARE DISTURBED BY THIS WORK SHALL BE REESTABLISHED, PERPETUATED, AND DOCUMENTED PER THE PROFESSIONAL LAND SURVEYORS ACT.
10. TWO (2) SETS OF SURVEY (CUT) SHEETS SHALL BE PROVIDED TO THE CITY ENGINEERING INSPECTOR.

SEWER NOTES

1. SEWER MAIN AND APPURTENANCES SHALL BE CONSTRUCTED IN ACCORDANCE WITH THE "CARLSBAD MUNICIPAL WATER DISTRICT'S SEWER SYSTEM – DESIGN CRITERIA, STANDARD DRAWING AND SPECIFICATIONS", AND THE STANDARD SPECIFICATIONS, MARCH 1993, AND THE STANDARD SPECIFICATIONS FOR PUBLIC WORKS CONSTRUCTION, LATEST EDITION (GREEN BOOK).
2. THE CONTRACTOR SHALL OBTAIN AN EXCAVATION PERMIT FROM THE DIVISION OF INDUSTRIAL SAFETY BEFORE ANY EXCAVATION AND SHALL ADHERE TO ALL PROVISIONS OF THE STATE CONSTRUCTION SAFETY ORDERS.
3. BEFORE ANY CONNECTION TO THE DISTRICT'S EXISTING SYSTEM, A PERMIT SHALL BE OBTAINED FROM THE DISTRICT. IT MUST BE SIGNED AND APPROVED BY THE DISTRICT'S ENGINEER AND SUPERINTENDENT.
4. BEFORE CONSTRUCTION BEGINS IN ANY PUBLIC RIGHT OF WAY, A CITY RIGHT OF WAY PERMIT SHALL BE REQUIRED.
5. THE CONTRACTOR SHALL NOTIFY THE CITY OF CARLSBAD ENGINEERING INSPECTION 48 HOURS PRIOR TO THE BEGINNING OF CONSTRUCTION. (TELEPHONE NO. [619] 438-3891)

WATER NOTES

1. WATER MAIN AND APPURTENANCES SHALL BE CONSTRUCTED IN ACCORDANCE WITH THE "CARLSBAD MUNICIPAL WATER DISTRICT'S PROCEDURAL GUIDE – GENERAL DESIGN REQUIREMENTS AND STANDARDS AND SPECIFICATIONS FOR CONSTRUCTION OF PUBLIC POTABLE WATER FACILITIES, DATED OCTOBER 1993, OR THE LATEST REVISION.
2. THE CONTRACTOR SHALL OBTAIN AN EXCAVATION PERMIT FROM THE DIVISION OF INDUSTRIAL SAFETY BEFORE ANY EXCAVATION AND SHALL PROVIDE PROOF OF OSHA NOTIFICATION AND SHALL ADHERE TO ALL PROVISIONS OF THE STATE CONSTRUCTION SAFETY ORDERS.
3. BEFORE ANY CONNECTION OR SHUT DOWN OF VALVES ON EXISTING C.M.W.D. LINES, A PERMIT SHALL BE OBTAINED FROM THE C.M.W.D. OFFICE AND MUST BE SIGNED AND APPROVED BY DISTRICT ENGINEER AND DISTRICT SUPERINTRNDENT.
4. A PRECONSTRUCTION CONFERENCE MEETING SHALL BE HELD A MINIMUM OF 7 DAYS BEFORE CONSTRUCTION BEGINS. THE CONTRACTOR SHALL NOTIFY THE CITY OF CARLSBAD ENGINEERING INSPECTION 48 HOURS PRIOR TO BEGINNING OF CONSTRUCTION (TELEPHONE NO.[619] 438-3891) FOR SCHEDULING.
5. NO TREES OR STRUCTURES SHALL BE ALLOWED IN THE WATER LINE EASEMENT, ALL EXISTING TREES AND STRUCTURES SHALL BE REMOVED PRIOR TO COMMENCEMENT OF WORK – ANY EXCEPTIONS SHALL REQUIRE WRITTEN PERMISSION FROM THE DISTRICT ENGINEER.
6. THE EXACT HORIZONTAL AND VERTICAL ALIGNMENT AND TYPE OF MATERIALS OF THE FIRE LINE LOCATED BETWEEN THE DETECTOR CHECK VALVE AND BUILDING SHALL BE DETERMINED BY THE CITY OF CARLSBAD FIRE MARSHAL.
7. ALL RECLAIMED WATER MAINS AND APPURTENANCES SHALL BE CONSTRUCTED IN ACCORDANCE WITH THE "CARLSBAD RECLAMATION RULES AND REGULATIONS FOR THE CONSTRUCTION OF RECLAIMED WATER MAINS – CARLSBAD MUNICIPAL WATER DISTRICT", OCTOBER 1993 OR AS AMENDED.
8. ALL BURIED COPPER PIPING AND APPURTENANCES SHALL BE PROTECTED BY MEANS OF CATHODIC PROTECTION. IF DEVELOPER/OWNER CONDUCTS A SOILS TEST REPORT AND DEMONSTRATES THAT PROTECTION CAN BE PERFORMED IN ANOTHER MANNER, THE DISTRICT ENGINEER WILL CONSIDER AN ALTERNATIVE FORM OF PROTECTION.

"DECLARATION OF RESPONSIBLE CHARGE"

I HEREBY DECLARE THAT I AM THE ENGINEER OF WORK FOR THIS PROJECT, THAT I HAVE EXERCISED RESPONSIBLE CHARGE OVER THE DESIGN OF THE PROJECT AS DEFINED IN SECTION 6703 OF THE BUSINESS AND PROFESSIONS CODE, AND THAT THE DESIGN IS CONSISTENT WITH CURRENT STANDARDS.

I UNDERSTAND THAT THE CHECK OF PROJECT DRAWINGS AND SPECIFICATIONS BY THE CITY OF CARLSBAD DOES NOT RELIEVE ME AS ENGINEER OF WORK, OF MY RESPONSIBILITIES FOR PROJECT DESIGN.

FIRM: _____

ADDRESS: _____

CITY, ST.: _____

TELEPHONE: _____

BY: _____ DATE: _____
(NAME OF ENGINEER)

R.C.E. NO.: _____

REGISTRATION EXPIRATION DATE: _____

CMWD CONSTRUCTION NOTES

1. ALL POTABLE WATER SERVICES SHALL BE 1" AND ALL POTABLE WATER METERS SHALL BE 5/8" (UNLESS OTHERWISE NOTED ON PLANS).
2. ALL WATER METER BOXES SHALL BE 17"x30"x12" POLYMER CONCRETE AS MANUFACTURED BY ARMORCAST OR EQUAL.
3. MINIMUM SPACING BETWEEN POTABLE WATER LATERALS ADN SEWER SERVICES SHALL BE 5 FEET.
4. THE TOP OF THE WATER METER BOXES SHALL BE FLUSH WITH THE FINISHED SURFACE GRADE.

DEVELOPER

NAME:
ADDRESS:

VICINITY MAP

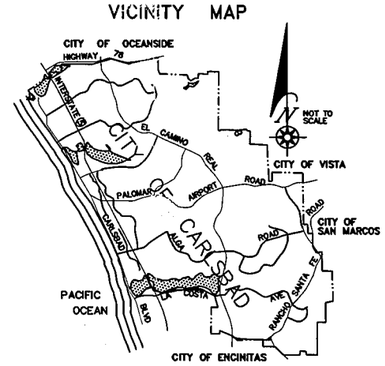

SOURCE OF TOPOGRAPHY

TOPOGRAPHY SHOWN ON THESE PLANS WAS GENERATED BY_____ METHODS FROM INFORMATION GATHERED ON _____, 20____ BY_____.
TOPOGRAPHY SHOWN HEREON CONFORMS TO NATIONAL MAP ACCURACY STANDARDS.

PROJECT LOCATION

THIS PROJECT IS LOCATED WITHIN ASSESSORS PARCEL NUMBER(S)_____
THE CALIFORNIA COORDINATE INDEX OF THIS PROJECT IS N_____ E_____.

BENCH MARK

DESCRIPTION: _____
LOCATION: _____
RECORDED: _____
ELEVATION: _____ DATUM: _____

REFERENCE DRAWINGS

BASIS OF BEARINGS

WORK TO BE DONE

THE IMPROVEMENT WORK SHALL BE PERFORMED IN ACCORDANCE WITH THE FOLLOWING DOCUMENTS, CURRENT AT THE TIME OF CONSTRUCTION, AS DIRECTED BY THE CITY ENGINEER.

1. CARLSBAD MUNICIPAL CODE
2. CITY OF CARLSBAD STANDARDS
3. THIS SET OF PLANS
4. RESOLUTION NO._____ DATED_____
5. THE STANDARD SPECIFICATIONS FOR PUBLIC WORKS CONSTRUCTION (GREEN BOOK).
6. SOILS REPORT AND RECOMMENDATIONS BY_____ _____ DATED_____
7. THE SAN DIEGO AREA REGIONAL STANDARD DRAWINGS AND AS MAY BE MODIFIED BY THE CITY OF CARLSBAD STANDARDS.
8. CALIFORNIA COASTAL COMMISSION DEVELOPMENT PERMIT CONDITIONS DATED _____
9. THE CARLSBAD MUNICIPAL WATER DISTRICT'S STANDARDS AND SPECIFICATIONS FOR WATER, SEWER AND RECLAIMED WATER.
10. STORM WATER POLLUTION PREVENTION PLAN (SWPPP) PREPARED BY _____ DATED _____ WDID NO. 937C
11. STORM WATER MANAGEMENT PLAN (SWMP) PREPARED BY _____ DATED _____

LEGEND

DESCRIPTION	DWG. NO.	SYMBOL	QUANTITY

CITY OF CARLSBAD FIRE DEPARTMENT
REQUIREMENTS
NO. OF F.H.(S)____F.FLOW_____G.P.M. OUT OF____F.H.(S).
BLDG. SPRINKLED YES/NO. . . F.FLOW_____G.P.M.

FIRE MARSHAL DATE

CARLSBAD MUNICIPAL WATER DISTRICT

ROBERT J. WOJCIK DATE
DEPUTY CITY ENGINEER R.C.E. 33698 EXP. 6/30/06

"AS BUILT"

P.E. _____ EXP. _____ DATE

REVIEWED BY:

INSPECTOR DATE

DATE	INITIAL	REVISION DESCRIPTION	DATE	INITIAL	DATE	INITIAL
ENGINEER OF WORK			OTHER APPROVAL		CITY APPROVAL	

SHEET | CITY OF CARLSBAD ENGINEERING DEPARTMENT | SHEETS

IMPROVEMENT PLANS FOR:

APPROVED LLOYD B. HUBBS
CITY ENGINEER PE 23889 EXPIRES 12/31/05 DATE

DWN BY: _____ CHKD BY: _____ RVWD BY: _____
PROJECT NO. | DRAWING NO.

CMWD _____

GRADING NOTES

(IN ADDITION TO THE REQUIREMENTS OF CHAPTER 15.16 OF THE CARLSBAD MUNICIPAL CODE.)

1. THIS PLAN SUPERSEDES ALL OTHER PLANS PREVIOUSLY APPROVED BY THE CITY OF CARLSBAD REGARDING GRADING SHOWN ON THIS SET OF PLANS.
2. APPROVAL OF THIS PLAN DOES NOT LESSEN OR WAIVE ANY PORTION OF THE CARLSBAD MUNICIPAL CODE, RESOLUTION OF CONDITIONAL APPROVAL, CITY STANDARDS OR OTHER ADDITIONAL DOCUMENTS LISTED HEREON AS THEY MAY PERTAIN TO THIS PROJECT. THE ENGINEER IN RESPONSIBLE CHARGE SHALL REVISE THESE PLANS WHEN NON-CONFORMANCE IS DISCOVERED.
3. CITY APPROVAL OF PLANS DOES NOT RELIEVE THE DEVELOPER OR ENGINEER-OF-WORK FROM RESPONSIBILITY FOR THE CORRECTION OF ERRORS AND OMISSIONS DISCOVERED DURING CONSTRUCTION. ALL PLAN REVISIONS SHALL BE PROMPTLY SUBMITTED TO THE CITY ENGINEER FOR APPROVAL.
4. A RIGHT-OF-WAY PERMIT FROM THE CITY ENGINEER WILL BE REQUIRED FOR ANY WORK IN THE PUBLIC RIGHT OF WAY, PRIOR TO PERMIT ISSUANCE, A CERTIFICATE OF INSURANCE AS WELL AS ADDITIONAL INSURED ENDORSEMENT MUST BE FILED NAMING THE CITY OF CARLSBAD AS AN ADDITIONAL INSURED ON THE PERMITTEE'S POLICY IN THE MINIMUM AMOUNT OF $1,000,000.00 FOR EACH OCCURRENCE OF LIABILITY. THE INSURANCE COMPANY WRITING THE POLICY MUST HAVE A RATING OF "A-" OR BETTER AND A SIZE CATEGORY OF CLASS V OR BETTER AS ESTABLISHED BY "BEST'S" KEY RATING GUIDE.
5. UNLESS EXEMPTED BY SECTION 301.(b)5 OF THE UNIFORM BUILDING CODE, RETAINING WALLS OUTSIDE OF PUBLIC RIGHT OF WAY REQUIRE SEPARATE PERMITS FROM THE BUILDING DEPARTMENT.
6. NO WORK SHALL BE COMMENCED UNTIL ALL PERMITS HAVE BEEN OBTAINED FROM THE CITY AND OTHER APPROPRIATE AGENCIES.
7. APPROVAL OF THESE PLANS BY THE CITY ENGINEER DOES NOT AUTHORIZE ANY WORK OR GRADING TO BE PERFORMED UNTIL THE PROPERTY OWNER'S PERMISSION HAS BEEN OBTAINED AND A VALID GRADING PERMIT HAS BEEN ISSUED.
8. NO REVISIONS WILL BE MADE TO THESE PLANS WITHOUT THE WRITTEN APPROVAL OF THE CITY ENGINEER, NOTED WITHIN THE REVISION BLOCK, ON THE APPROPRIATE SHEET OF THE PLANS AND THE TITLE SHEET.
9. ORIGINAL DRAWINGS SHALL BECOME THE PROPERTY OF THE CITY UPON BEING SIGNED BY THE CITY ENGINEER.
10. THE ORIGINAL DRAWING SHALL BE REVISED TO REFLECT AS-BUILT CONDITIONS BY THE ENGINEER-OF-WORK PRIOR TO FINAL ACCEPTANCE OF THE WORK BY THE CITY.
11. ACCESS FOR FIRE AND OTHER EMERGENCY VEHICLES SHALL BE MAINTAINED TO THE PROJECT SITE AT ALL TIMES DURING CONSTRUCTION.
12. WHERE TRENCHES ARE WITHIN CITY EASEMENTS, A SOILS REPORT COMPRISED OF (A) SUMMARY SHEET, (B) LABORATORY WORK SHEETS AND (C) COMPACTION CURVES, SHALL BE SUBMITTED BY A PROFESSIONAL ENGINEER OF THE STATE OF CALIFORNIA, PRINCIPALLY DOING BUSINESS IN THE FIELD OF APPLIED SOILS MECHANICS. THE SOILS REPORT WILL BE SUBMITTED TO THE CITY ENGINEERING INSPECTOR WITHIN TWO WORKING DAYS OF THE COMPLETION OF FIELD TESTS.
13. A SOILS COMPACTION REPORT AND COMPLIANCE VERIFICATION REGARDING ADHERENCE TO RECOMMENDATIONS OUTLINED IN THE SOILS REPORT IS REQUIRED PRIOR TO THE ISSUANCE OF A BUILDING PERMIT. ALL CONTROLLED GRADING SHALL BE DONE UNDER THE DIRECTION OF A PROFESSIONAL ENGINEER OF THE STATE OF CALIFORNIA PRINCIPALLY DOING BUSINESS IN THE FIELD OF APPLIED SOILS MECHANICS. ALL FILL OR FUTURE FILL AREAS SHALL BE CONSTRUCTED IN ACCORDANCE WITH THE CITY OF CARLSBAD STANDARD SPECIFICATIONS AND THE " EARTHWORK SPECIFICATIONS " ATTACHED TO THE PRELIMINARY SOILS INVESTIGATION. DAILY FIELD COMPACTION REPORTS WILL BE SUBMITTED TO THE PROJECT INSPECTOR.
14. A PRECONSTRUCTION MEETING SHALL BE HELD AT THE SITE PRIOR TO THE BEGINNING OF WORK AND SHALL BE ATTENDED BY ALL REPRESENTATIVES RESPONSIBLE FOR CONSTRUCTION, INSPECTION, SUPERVISION, TESTING AND ALL OTHER ASPECTS OF THE WORK. THE CONTRACTOR SHALL SCHEDULE THE MEETING BY CALLING (760) 438-3891 AT LEAST FIVE(5) WORKING DAYS PRIOR TO STARTING CONSTRUCTION. APPROVED DRAWINGS MUST BE AVAILABLE PRIOR TO SCHEDULING. THE GRADING PERMIT WILL BE PROVIDED BY THE PROJECT INSPECTOR AT THE MEETING.
15. ALL INSPECTION REQUESTS (OTHER THAN FOR PRECONSTRUCTION MEETING) WILL BE MADE BY CALLING THE ENGINEERING IN-HOUSE INSPECTION REQUEST LINE AT (760) 438-3891. REQUESTS MUST BE RECEIVED WITHIN TWO WORKING DAYS OF THE INSPECTION NEEDED. INSPECTIONS WILL BE MADE THE NEXT WORKING DAY UNLESS YOU REQUEST OTHERWISE. REQUESTS MADE AFTER 2:00 P.M. WILL BE SCHEDULED FOR TWO FULL WORKING DAYS LATER.
16. THE OWNER AND/OR APPLICANT THROUGH THE DEVELOPER AND/OR CONTRACTOR SHALL DESIGN, CONSTRUCT AND MAINTAIN ALL SAFETY DEVICES, INCLUDING SHORING, AND SHALL BE SOLELY RESPONSIBLE FOR CONFORMING TO ALL LOCAL, STATE AND FEDERAL SAFETY AND HEALTH STANDARDS, LAWS AND REGULATIONS.
17. THE CONTRACTOR SHALL CONFORM TO LABOR CODE SECTION 6705 BY SUBMITTING A DETAIL PLAN TO THE CITY ENGINEER AND/OR CONCERNED AGENCY SHOWING THE DESIGN OF SHORING, BRACING SLOPING OR OTHER PROVISIONS TO BE MADE OF WORKER PROTECTION FROM THE HAZARD OF CAVING GROUND DURING THE EXCAVATION OF SUCH TRENCH OR TRENCHES OR DURING THE PIPE INSTALLATION THEREIN. THIS PLAN MUST BE PREPARED FOR ALL TRENCHES FIVE FEET (5') OR MORE IN DEPTH AND APPROVED BY THE CITY ENGINEER AND/OR CONCERNED AGENCY PRIOR TO EXCAVATION. IF THE PLAN VARIES FROM THE SHORING SYSTEM STANDARDS ESTABLISHED BY THE CONSTRUCTION SAFETY ORDERS, TITLE 8 CALIFORNIA ADMINISTRATIVE CODE, THE PLAN SHALL BE PREPARED BY A REGISTERED ENGINEER AT THE CONTRACTORS EXPENSE. A COPY OF THE OSHA EXCAVATION PERMIT MUST BE SUBMITTED TO THE INSPECTOR PRIOR TO EXCAVATION.
18. NO BLASTING SHALL BE PERFORMED UNTIL A VALID BLASTING PERMIT HAS BEEN OBTAINED FROM THE CITY OF CARLSBAD. SUBMIT APPLICATION FOR BLASTING PERMIT WELL IN ADVANCE OF THE SCHEDULING OF BLASTING OPERATIONS.
19. IF ANY ARCHAEOLOGICAL RESOURCES ARE DISCOVERED WITHIN ANY WORK AREA DURING CONSTRUCTION, OPERATIONS WILL CEASE IMMEDIATELY, AND THE PERMITTEE WILL NOTIFY THE CITY ENGINEER. OPERATIONS WILL NOT RESTART UNTIL THE PERMITTEE HAS RECEIVED WRITTEN AUTHORITY FROM THE CITY ENGINEER TO DO SO.
20. ALL OPERATIONS CONDUCTED ON THE SITE OR ADJACENT THERETO, INCLUDING WARMING UP, REPAIR, ARRIVAL, DEPARTURE OR OPERATION OF TRUCKS, EARTHMOVING EQUIPMENT, CONSTRUCTION EQUIPMENT AND ANY OTHER ASSOCIATED GRADING EQUIPMENT SHALL BE LIMITED TO THE PERIOD BETWEEN 7:00 A.M. AND SUNSET EACH DAY, MONDAY THRU FRIDAY AND NO EARTHMOVING OR GRADING OPERATIONS SHALL BE CONDUCTED ON WEEKENDS OR HOLIDAYS. (A LIST OF CITY HOLIDAYS IS AVAILABLE AT THE ENGINEERING DEPARTMENT COUNTER.)
21. ALL OFF-SITE HAUL ROUTES SHALL BE SUBMITTED BY THE CONTRACTOR TO THE CITY ENGINEER FOR APPROVAL TWO FULL WORKING DAYS PRIOR TO BEGINNING OF WORK.
22. IMPORT MATERIAL SHALL BE OBTAINED FROM, AND WASTE MATERIAL SHALL BE DEPOSITED AT, A SITE APPROVED BY THE CITY ENGINEER. THE CONTRACTOR SHALL BE RESPONSIBLE FOR ANY DEBRIS OR DAMAGE OCCURRING ALONG THE HAUL ROUTES OR ADJACENT STREETS AS A RESULT OF THE GRADING OPERATION.
23. BRUSH SHALL BE REMOVED ONLY WITHIN THE AREA TO BE GRADED. NO TREES ARE TO BE REMOVED UNLESS SPECIFICALLY NOTED ON THE PLAN.
24. ALL AREAS SHALL BE GRADED TO DRAIN. GRADING RESULTING IN THE PONDING OF WATER IS NOT PERMITTED. ALL EARTHEN SWALES AND DITCHES SHALL HAVE A MINIMUM ONE PERCENT SLOPE.
25. THESE PLANS ARE SUBJECT TO A SIGNED AND APPROVED SET OF EROSION CONTROL PLANS. EROSION CONTROL SHALL BE AS SHOWN AND AS APPROVED BY THE CITY ENGINEER OR AS DIRECTED BY THE PROJECT INSPECTOR.
26. ALL SLOPES SHALL BE TRIMMED TO A FINISH GRADE TO PRODUCE A UNIFORM SURFACE AND CROSS SECTION. THE SITE SHALL BE LEFT IN A NEAT AND ORDERLY CONDITION. ALL STONES, ROOTS OR OTHER DEBRIS SHALL BE REMOVED AND DISPOSED OF AT A SITE APPROVED OF BY THE CITY ENGINEER.
27. ALL SLOPES SHALL BE IRRIGATED, STABILIZED, PLANTED AND/OR HYDROSEEDED WITHIN TEN (10) DAYS OF THE TIME WHEN EACH SLOPE IS BROUGHT TO GRADE AS SHOWN ON THE APPROVED GRADING PLANS.
28. LANDSCAPING SHALL BE ACCOMPLISHED ON ALL SLOPES AND PADS AS REQUIRED BY THE CITY OF CARLSBAD LANDSCAPE MANUAL, THE LANDSCAPING PLANS FOR THIS PROJECT, DRAWING NO._____, AND/OR AS DIRECTED BY THE CITY ENGINEER OR PLANNING DIRECTOR.
29. THE OWNER/APPLICANT SHALL INSURE THAT ALL CONTRACTORS SHALL COORDINATE THE WORK OF THESE GRADING PLANS WITH THAT SHOWN ON BOTH THE LANDSCAPE AND IRRIGATION PLANS AND THE IMPROVEMENT PLANS AS REQUIRED FOR THIS WORK IN ACCORDANCE WITH THE LANDSCAPE MANUAL TIME REQUIREMENTS.
30. STORM DRAIN PIPE SHALL BE REINFORCED CONCRETE PIPE WITH A MINIMUM D-LOAD OF 1,350. FOR PRIVATE STORM DRAIN PIPES, UP TO 15" PVC MAY BE UTILIZED PROVIDED DEPTH IS LESS THAN 15 FEET AND BACKFILLED WITH 3/4" ROCK PER SDRSD S-4 TYPE "C" AND PIPE MEETS ASTM STANDARD 3034 FOR SDR 35 SOLID WALL PIPE.
31. WHERE AN EXISTING PIPE LINE IS TO BE ABANDONED AS A RESULT OF THE GRADING OPERATION, IT SHALL BE REMOVED WITHIN TWENTY FEET OF BUILDING OR STREET AREAS AND REPLACED WITH PROPERLY COMPACTED SOILS. IN OTHER AREAS THE PIPE WILL BE PLUGGED WITH CONCRETE OR REMOVED AS APPROVED BY THE CITY ENGINEER.
32. THE CONTRACTOR SHALL VERIFY THE LOCATION OF ALL EXISTING FACILITIES (ABOVE GROUND AND UNDER GROUND) WITHIN THE PROJECT SITE SUFFICIENTLY AHEAD OF GRADING TO PERMIT THE REVISION OF THE GRADING PLANS IF IT IS FOUND THAT THE ACTUAL LOCATIONS ARE IN CONFLICT WITH THE PROPOSED WORK.
33. THE CONTRACTOR SHALL NOTIFY AFFECTED UTILITY COMPANIES (SEE BELOW) AT LEAST 2 FULL WORKING DAYS PRIOR TO STARTING GRADING NEAR THEIR FACILITIES AND SHALL COORDINATE THE WORK WITH A COMPANY REPRESENTATIVE.

UNDERGROUND SERVICE ALERT	(800)422-4133
SDG&E	(800)650-7343
SBC (PACIFIC BELL)	(760)892-0123
ADELPHIA CABLE COMMUNICATIONS	(760)438-7741
COX COMMUNICATIONS	(760)806-9809
CITY OF CARLSBAD(STREETS & STORM DRAIN)	(760)434-2980
*CITY OF CARLSBAD(SEWER,WATER & RECLAIMED WATER)	(760)438-2722
*SAN DIEGUITO WATER DISTRICT	(760)633-2650
*LEUCADIA WASTEWATER DISTRICT	(760)753-0155
*VALLECITOS WATER DISTRICT	(760)744-0460
*OLIVENHAIN WATER DISTRICT	(760)753-6466
*BUENA SANITATION DISTRICT	(760)726-1340

*AS APPROPRIATE

34. PERMIT COMPLIANCE REQUIREMENTS:
    A. FOR CONTROLLED GRADING - THE APPLICANT HIRES A CIVIL ENGINEER, SOILS ENGINEER, AND/OR GEOLOGIST TO GIVE TECHNICAL ADVICE, OBSERVE AND CONTROL THE WORK IN PROGRESS [15.16.120.B] CARLSBAD MUNICIPAL CODE.
    B. PRIOR TO FINAL APPROVAL OF A GRADING PERMIT - THE FOLLOWING REPORTS MUST BE SUBMITTED TO THE CITY ENGINEER VIA THE PROJECT INSPECTOR [15.16.120.9 & 10] CARLSBAD MUNICIPAL CODE:
        (1) FINAL REPORT BY SUPERVISING GRADING ENGINEER STATING ALL GRADING IS COMPLETE. ALL EROSION CONTROL, SLOPE PLANTING AND IRRIGATION ARE INSTALLED IN CONFORMANCE WITH CITY CODE AND THE APPROVED PLANS (OBTAIN SAMPLE OF COMPLIANCE LETTER FROM CITY ENGINEERING DEPARTMENT).
        (2) AS-BUILT GRADING PLAN.
        (3) REPORT FROM THE SOILS ENGINEER, WHICH INCLUDES RECOMMENDED SOIL BEARING CAPACITIES, A STATEMENT AS TO THE EXPANSIVE QUALITY OF THE SOIL, AND SUMMARIES OF FIELD AND LABORATORY TESTS. THE REPORT SHALL ALSO INCLUDE A STATEMENT BY THE SOILS ENGINEER THAT THE GRADING WAS DONE IN ACCORDANCE WITH THE REQUIREMENTS AND RECOMMENDATIONS OUTLINED IN THE PRELIMINARY SOILS REPORT AND ANY SUPPLEMENTS THERETO.
        (4) REPORT WITH AS-BUILT GEOLOGIC PLAN, IF REQUIRED BY THE CITY.
35. UNLESS A GRADING PERMIT FOR THIS PROJECT IS ISSUED WITHIN ONE (1) YEAR AFTER THE CITY ENGINEER'S APPROVAL, THESE PLANS MAY BE REQUIRED TO BE RESUBMITTED FOR PLANCHECK. PLANCHECK FEES WILL BE REQUIRED FOR ANY SUCH RECHECK.
36. THE SOILS REPORT TITLED_____, PREPARED BY_____,20____, SHALL BE CONSIDERED AS A PART OF THIS GRADING PLAN. ALL GRADING SHALL BE DONE IN ACCORDANCE WITH THE RECOMMENDATIONS AND SPECIFICATIONS CONTAINED IN SAID SOILS REPORT. DATED
37. WHEELCHAIR RAMPS SHALL BE INSTALLED PER REQUIREMENTS OF TITLE 24, CALIFORNIA ADMINISTRATIVE CODE.
38. ALL SURVEY MONUMENTS AND POINTS THAT ARE DISTURBED BY THIS WORK SHALL BE REESTABLISHED, PERPETUATED, AND DOCUMENTED PER THE PROFESSIONAL LAND SURVEYORS ACT.

"DECLARATION OF RESPONSIBLE CHARGE"

I HEREBY DECLARE THAT I AM THE ENGINEER OF WORK FOR THIS PROJECT, THAT I HAVE EXERCISED RESPONSIBLE CHARGE OVER THE DESIGN OF THE PROJECT AS DEFINED IN SECTION 6703 OF THE BUSINESS AND PROFESSIONS CODE, AND THAT THE DESIGN IS CONSISTENT WITH CURRENT STANDARDS.

I UNDERSTAND THAT THE CHECK OF PROJECT DRAWINGS AND SPECIFICATIONS BY THE CITY OF CARLSBAD DOES NOT RELIEVE ME, AS ENGINEER OF WORK, OF MY RESPONSIBILITIES FOR PROJECT DESIGN.

FIRM:_____

ADDRESS:_____

CITY, STATE:_____

TELEPHONE:_____

BY:_____ DATE:_____
(NAME OF ENGINEER)

R.C.E. NO.:_____

REGISTRATION EXPIRATION DATE:_____

SOILS ENGINEER'S CERTIFICATE

I, _____, A REGISTERED CIVIL ENGINEER OF THE STATE OF CALIFORNIA, PRINCIPALLY DOING BUSINESS IN THE FIELD OF APPLIED SOILS MECHANICS, HEREBY CERTIFY THAT A SAMPLING AND STUDY OF THE SOIL CONDITIONS PREVALENT WITHIN THIS SITE WAS MADE BY ME OR UNDER MY DIRECTION BETWEEN THE DATES OF _____ 20____ AND _____ 20____. TWO COPIES OF THE SOILS REPORT COMPILED FROM THIS STUDY, WITH MY RECOMMENDATIONS, HAS BEEN SUBMITTED TO THE OFFICE OF THE CITY ENGINEER.

SIGNED: _____

P.E. NO.: _____

DATE: _____

LICENSE EXPIRATION DATE: _____

OWNER'S CERTIFICATE

I (WE) HEREBY CERTIFY THAT A REGISTERED SOILS ENGINEER OR GEOLOGIST HAS BEEN OR WILL BE RETAINED TO SUPERVISE OVER-ALL GRADING ACTIVITY AND ADVISE ON THE COMPACTION AND STABILITY OF THIS SITE.

_____ _____
NAME DATE

WORK TO BE DONE

THE GRADING WORK SHALL CONSIST OF THE CONSTRUCTION OF ALL CUTS AND FILLS, REMEDIAL GRADING, DRAINAGE FACILITIES, EROSION CONTROL FACILITIES, AND PLANTING OF PERMANENT LANDSCAPING AND PREPARATION OF AS-BUILT GRADING PLANS, AS-BUILT GEOLOGIC MAPS AND REPORTS, ALL AS SHOWN OR REQUIRED ON THIS SET OF PLANS AND THE CITY STANDARDS, SPECIFICATIONS, REQUIREMENTS, RESOLUTIONS AND ORDINANCES CITED ON THESE PLANS.

THE GRADING WORK SHALL BE PERFORMED IN ACCORDANCE WITH THE FOLLOWING DOCUMENTS, CURRENT AT THE TIME OF CONSTRUCTION, AS DIRECTED BY THE CITY ENGINEER.

1. CARLSBAD MUNICIPAL CODE
2. CITY OF CARLSBAD STANDARDS
3. THIS SET OF PLANS
4. CITY OF CARLSBAD PC/CC RESOLUTION NO(S). _____ DATED _____
5. THE STANDARD SPECIFICATIONS FOR PUBLIC WORKS CONSTRUCTION (GREEN BOOK).
6. SOILS REPORT AND RECOMMENDATIONS BY_____ _____ DATED _____
7. THE SAN DIEGO REGIONAL STANDARD DRAWINGS AND AS MAY BE MODIFIED BY THE CITY OF CARLSBAD STANDARDS.
8. CALIFORNIA COASTAL COMMISSION DEVELOPMENT PERMIT CONDITIONS DATED _____
9. ENVIRONMENTAL APPROVAL DOCUMENTS DATED _____
10. STORM WATER POLLUTION PREVENTION PLAN (SWPPP) PREPARED BY_____ DATED _____ WDID NO. 937C
11. STORM WATER MANAGEMENT PLAN (SWMP) PREPARED BY_____ DATED _____
12. THE CALIFORNIA STORM WATER QUALITY ASSOCIATION (CASQUA), STORM WATER BEST MANAGEMENT PRACTICE, CONSTRUCTION HANDBOOK AND STATE OF CALIFORNIA, DEPT. OF TRANSPORTATION, CONSTRUCTION SITE BEST MANAGEMENT PRACTICES (BMP) MANUAL.

LEGEND

DESCRIPTION	DWG.NO.	SYMBOL	QUANTITY

REFERENCE DRAWINGS

VICINITY MAP

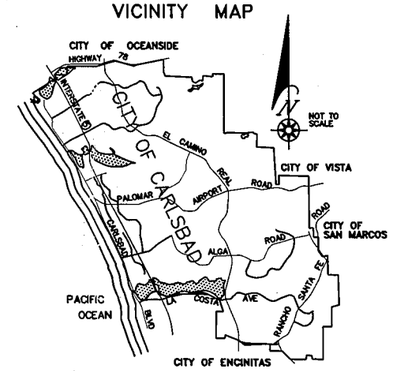

SOURCE OF TOPOGRAPHY

TOPOGRAPHY SHOWN ON THESE PLANS WAS GENERATED BY_____ _____ METHODS FROM INFORMATION GATHERED ON_____, 20____ BY_____. TOPOGRAPHY SHOWN HEREON CONFORMS TO NATIONAL MAP ACCURACY STANDARDS.

PROJECT LOCATION

THIS PROJECT IS LOCATED WITHIN ASSESSORS PARCEL NUMBER(S) _____

THE CALIFORNIA COORDINATE INDEX OF THIS PROJECT IS: N_____ E_____.

BENCH MARK

DESCRIPTION: _____

LOCATION: _____

RECORDED: _____

ELEVATION: _____ DATUM: _____

EARTHWORK QUANTITIES

CUT: _____CY

FILL: _____CY

IMPORT: _____CY

EXPORT: _____CY

REMEDIAL: _____CY

PLANNING DEPARTMENT APPROVAL

_____ DATE: / /
(SIGNED)
MICHAEL J. HOLZMILLER, PLANNING DIRECTOR

_____ DATE: / /
(SIGNED)
RECOMMENDED BY: _____
(PRINT NAME)

"AS BUILT"

_____ _____
RCE_____ EXP._____ DATE

REVIEWED BY:

_____ _____
INSPECTOR DATE

CARLSBAD MUNICIPAL WATER DISTRICT

_____ _____
ROBERT J. WOJCIK DATE
DEPUTY CITY ENGINEER R.C.E. 33698 EXP. 6/30/06

DATE	INITIAL	REVISION DESCRIPTION	DATE	INITIAL	DATE	INITIAL
ENGINEER OF WORK			OTHER APPROVAL		CITY APPROVAL	

SHEET | CITY OF CARLSBAD ENGINEERING DEPARTMENT | SHEETS

GRADING PLANS FOR:

APPROVED LLOYD B. HUBBS

CITY ENGINEER PE 23889 EXPIRES 12/31/05 DATE

DWN BY: ____
CHKD BY: ____
RVWD BY: ____

PROJECT NO. | DRAWING NO.

G:\DWG12\CLSB-GP.DWG 12/12/94

EROSION CONTROL NOTES

1. IN CASE EMERGENCY WORK IS REQUIRED,CONTACT AT (PHONE NUMBER)
2. EQUIPMENT AND WORKERS FOR EMERGENCY WORK SHALL BE MADE AVAILABLE AT ALL TIMES DURING THE RAINY SEASON. ALL NECESSARY MATERIALS SHALL BE STOCKPILED ON SITE AT CONVENIENT LOCATIONS TO FACILITATE RAPID CONSTRUCTION OF TEMPORARY DEVICES WHEN RAIN IS EMINENT.
3. DEVICES SHOWN ON PLANS SHALL NOT BE MOVED OR MODIFIED WITHOUT THE APPROVAL OF THE ENGINEERING INSPECTOR.
4. THE CONTRACTOR SHALL RESTORE ALL EROSION CONTROL DEVICES TO WORKING ORDER TO THE SATISFACTION OF THE CITY ENGINEER AFTER EACH RUN-OFF PRODUCING RAINFALL.
5. THE CONTRACTOR SHALL INSTALL ADDITIONAL EROSION CONTROL MEASURES AS MAY BE REQUIRED BY THE CITY ENGINEER DUE TO UNCOMPLETED GRADING OPERATIONS OR UNFORESEEN CIRCUMSTANCES WHICH MAY ARISE.
6. THE CONTRACTOR SHALL BE RESPONSIBLE AND SHALL TAKE NECESSARY PRECAUTIONS TO PREVENT PUBLIC TRESPASS ONTO AREAS WHERE IMPOUNDED WATERS CREATE A HAZARDOUS CONDITION.
7. ALL EROSION CONTROL MEASURES PROVIDED PER THE APPROVED GRADING PLAN SHALL BE INCORPORATED HEREON.
8. GRADED AREAS AROUND THE PROJECT PERIMETER MUST DRAIN AWAY FROM THE FACE OF SLOPE AT THE CONCLUSION OF EACH WORKING DAY.
9. ALL REMOVABLE PROTECTIVE DEVICES SHOWN SHALL BE IN PLACE AT THE END OF EACH WORKING DAY WHEN THE FIVE (5) DAY RAIN PROBABILITY FORECAST EXCEEDS FORTY PERCENT (40%). SILT AND OTHER DEBRIS SHALL BE REMOVED AFTER EACH RAINFALL.
10. ALL GRAVEL BAGS SHALL BE BURLAP TYPE WITH 3/4 INCH MINIMUM AGGREGRATE.
11. SHOULD GERMINATION OF HYDROSEEDED SLOPES FAIL TO PROVIDE EFFECTIVE COVERAGE OF GRADED SLOPES (90% COVERAGE) PRIOR TO NOVEMBER 15, THE SLOPES SHALL BE STABILIZED BY PUNCH STRAW INSTALLED IN ACCORDANCE WITH SECTION 35.023 OF THE EROSION AND SEDIMENT CONTROL HANDBOOK OF THE DEPARTMENT OF CONSERVATION, STATE OF CALIFORNIA.

TEMPORARY EROSION CONTROL PLANTING AND IRRIGATION

ALL PERMANENT AND TEMPORARY EROSION CONTROL PLANTING AND IRRIGATION SHALL BE INSTALLED AND MAINTAINED AS REQUIRED IN SECTION 212 OF THE STANDARD SPECIFICATIONS AND THE FOLLOWING:

A. HYDROSEEDING SHALL BE APPLIED TO:
   1. ALL SLOPES THAT ARE GRADED 6:1 (HORIZONTAL TO VERTICAL) OR STEEPER WHEN THEY ARE:
      a. THREE FEET OR MORE IN HEIGHT AND ADJACENT TO A PUBLIC WALL OR STREET.
      b. ALL SLOPES 4 FEET OR MORE IN HEIGHT.
   2. AREAS GRADED FLATTER THAN 6:1 WHEN ANY OF THE FOLLOWING CONDITIONS EXIST:
      a. NOT SCHEDULED FOR IMPROVEMENTS(CONSTRUCTION OR GENERAL LANDSCAPING) WITHIN 60 DAYS OF ROUGH GRADING.
      b. IDENTIFIED BY THE PARKS AND RECREATION DIRECTOR AS HIGHLY VISIBLE TO THE PUBLIC.
      c. HAVE ANY SPECIAL CONDITION IDENTIFIED BY THE CITY ENGINEER THAT WARRANTS IMMEDIATE TREATMENT.

B. HYDROSEEDED AREAS SHALL BE IRRIGATED IN ACCORDANCE WITH THE FOLLOWING CRITERIA:
   1. ALL SLOPES THAT ARE GRADED 6:1 OR STEEPER AND THAT ARE:
      a. THREE TO EIGHT FEET IN HEIGHT SHALL BE IRRIGATED BY HAND WATERING FROM QUICK COUPLERS/HOSE BIBS OR A CONVENTIONAL SYSTEM OF LOW PRECIPITATION SPRINKLER HEADS PROVIDING 100% COVERAGE.
      b. GREATER THAN 8 FEET IN HEIGHT SHALL BE WATERED BY A CONVENTIONAL SYSTEM OF LOW PRECIPITATION SPRINKLER HEADS PROVIDING 100% COVERAGE.
   2. AREAS SLOPED LESS THAN 6:1 SHALL BE IRRIGATED AS APPROVED BY THE CITY ENGINEER, PRIOR TO HYDROSEEDING. THE DEVELOPER SHALL SUBMIT A PROPOSED SCHEME TO PROVIDE IRRIGATION TO THE CITY ENGINEER. THE PROPOSAL SHALL BE SPECIFIC REGARDING THE NUMBERS,TYPES AND COSTS OF THE ELEMENTS OF THE PROPOSED SYSTEM.
   3. IRRIGATION SHALL MAINTAIN THE MOISTURE LEVEL OF THE SOIL AT THE OPTIMUM LEVEL FOR THE GROWTH OF THE HYDROSEEDED GROWTH.

C. HYDROSEEDING MIX SHALL CONSIST OF ALL OF THE FOLLOWING:
   1. SEED MIX SHALL CONSIST OF NO LESS THAN:
      a. 20 lbs. PER ACRE OF ROSE CLOVER
      b. 20 lbs. PER ACRE OF ZORRO FESCUE
      c. 3 lbs. PER ACRE OF E SCHOOL CIA CALIFORNICA
      d. 4 lbs. PER ACRE OF ACHILLEA MILLEFOLIA
      e. 3 lbs. PER ACRE OF ALYSSUM (CARPET OF SNOW)
      f. 1/2 lb. PER ACRE OF DIMORPHOLECA
      g. ITEMS c,d,e, AND f OF THIS SUBSECTION MAY BE OMITTED ON LOCATIONS WHERE THE AREA BEING HYDROSEEDED IS NOT VISIBLE FROM EITHER A PUBLIC STREET OR RESIDENTIAL STRUCTURES.
      h. ITEM a OF THIS SUBSECTION MUST BE INOCULATED WITH A NITROGEN FIXING BACTERIA AND APPLIED DRY EITHER BY DRILLING OR BROADCASTING BEFORE HYDROSEEDING.
      i. ALL SEED MATERIALS SHALL BE TRANSPORTED TO THE JOBSITE IN UNOPENED CONTAINERS WITH THE CALIFORNIA DEPARTMENT OF FOOD AND AGRICULTURE CERTIFICATION TAG ATTACHED TO, OR PRINTED ON SAID CONTAINERS.
      j. NON-PHYTO-TOXIC WETTING AGENTS MAY BE ADDED TO THE HYDROSEED SLURRY AT THE DISCRETION OF THE CONTRACTOR.
   2. TYPE 1 MULCH APPLIED AT THE RATE OF ND LESS THAN 2000 lbs PER ACRE. TYPE 6 MULCH (STRAW) MAY BE SUBSTITUTED, ALL OR PART, FOR HYDRAULICALLY APPLIED FIBER MATERIAL. WHEN STRAW IS USED IT MUST BE ANCHORED TO THE SLOPE BY MECHANICALLY PUNCHING NO LESS THAN 50% OF THE STRAW INTO THE SOIL.
   3. FERTILIZER CONSISTING OF AMMONIUM PHOSPHATE SULFATE, 16-20-0, WITH 15% SULPHUR APPLIED AT THE RATE OF 500 lbs. PER ACRE.

D. AREAS TO BE HYDROSEEDED SHALL BE PREPARED PRIOR TO HYDROSEEDING BY:
   1. ROUGHENING THE SURFACE TO BE PLANTED BY ANY OR A COMBINATION OF:
      a. TRACK WALKING SLOPES STEEPER THAN 6:1
      b. HARROWING AREAS 6:1 OR FLATTER THAT ARE SUFFICIENTLY FRIABLE.
      c. RIPPING AREAS THAT WILL NOT BREAK UP USING ITEMS a OR b ABOVE.
   2. CONDITIONING THE SOILS SO THAT IT IS SUITABLE FOR PLANTING BY:
      a. ADJUSTING THE SURFACE SOIL MOISTURE TO PROVIDE A DAMP BUT NOT SATURATED SEED BED.
      b. THE ADDITION OF SOIL AMENDMENTS, PH ADJUSTMENT, LEACHING OR COVERING SALINE SOILS TO PROVIDED VIABLE CONDITIONS FOR GROWTH.

E. HYDROSEEDED AREAS SHALL BE MAINTAINED TO PROVIDE A VIGOROUS GROWTH UNTIL THE PROJECT IS PERMANENTLY LANDSCAPED OR, FOR AREAS WHERE HYDROSEEDING IS THE PERMANENT LANDSCAPING, UNTIL THE PROJECT IS COMPLETED AND ALL BONDS RELEASED.

LEGEND

DESCRIPTION	QUANTITY	SYMBOL
STABILIZED CONSTRUCTION ENTRANCE		
STRAW BALE DIKE		
SILT FENCE		
UNLINED SWALE & BERM		
D-75 LINED SWALE		
BLOCK-SCREEN-GRAVEL SILT BASIN		
HAY BALE SILT BARRIER		
LIMITS OF CLEARING & GRADING		
GRAVEL BAGS		
PUNCHED STRAW		
LOG CHECK DAM		
HAY BALE CHECK DAM		
GRAVEL CHECK DAM		
RIPRAP		

"AS BUILT"

RCE. _____ EXP. _____ DATE

REVIEWED BY:

INSPECTOR DATE

DATE	INITIAL	REVISION DESCRIPTION	DATE	INITIAL	DATE	INITIAL
ENGINEER OF WORK			OTHER APPROVAL		CITY APPROVAL	

SHEET | CITY OF CARLSBAD ENGINEERING DEPARTMENT | SHEETS

APPROVED LLOYD B. HUBBS

CITY ENGINEER PE 23889 EXP.12/31/05 DATE

DWN BY: CHKD BY: RVWD BY: | PROJECT NO. | DRAWING NO.

C:\DWG12\CLSB-EP.DWG 12/12/04

GENERAL NOTES

1. THIS PLAN SUPERSEDES ALL OTHER PLANS PREVIOUSLY APPROVED BY THE CITY OF CARLSBAD REGARDING IMPROVEMENTS SHOWN ON THIS SET OF PLANS.
2. APPROVAL OF THIS PLAN DOES NOT LESSEN OR WAIVE ANY PORTION OF THE CARLSBAD MUNICIPAL CODE, RESOLUTION OF CONDITIONAL APPROVAL, CITY STANDARDS OR OTHER ADDITIONAL DOCUMENTS LISTED HEREON AS THEY MAY PERTAIN TO THIS PROJECT. THE ENGINEER IN RESPONSIBLE CHARGE SHALL REVISE THESE PLANS WHEN NON-CONFORMANCE IS DISCOVERED.
3. CITY APPROVAL OF PLANS DOES NOT RELIEVE THE DEVELOPER OR ENGINEER-OF-WORK FROM RESPONSIBILITY FOR THE CORRECTION OF ERRORS AND OMISSIONS DISCOVERED DURING CONSTRUCTION. ALL PLAN REVISIONS SHALL BE PROMPTLY SUBMITTED TO THE CITY ENGINEER FOR APPROVAL.
4. A RIGHT-OF-WAY PERMIT FROM THE CITY ENGINEER WILL BE REQUIRED FOR ANY WORK IN THE PUBLIC RIGHT OF WAY. PRIOR TO PERMIT ISSUANCE, A CERTIFICATE OF INSURANCE MUST BE FILED NAMING THE CITY OF CARLSBAD AS AN ADDITIONAL INSURED ON THE PERMITTEE'S POLICY IN THE MINIMUM AMOUNT OF $1,000,000.00 FOR EACH OCCURRANCE OF LIABILITY. THE INSURANCE COMPANY WRITING THE POLICY MUST HAVE A RATING OF "A" AND A SIZE CATEGORY OF CLASS V AS ESTABLISHED BY "BESTS" KEY RATING GUIDE.
5. NO WORK SHALL BE COMMENCED UNTIL ALL PERMITS HAVE BEEN OBTAINED FROM THE CITY AND OTHER APPROPRIATE AGENCIES.
6. REVISION OF THESE PLANS MAY BE REQUIRED IF THE PROPOSED IMPROVEMENTS ARE NOT CONSTRUCTED PRIOR TO THE DEADLINE DATE OF THE IMPROVEMENT AGREEMENT.
7. NO REVISIONS WILL BE MADE TO THESE PLANS WITHOUT THE WRITTEN APPROVAL OF THE CITY ENGINEER, NOTED WITHIN THE REVISION BLOCK, ON THE APPROPRIATE SHEET OF THE PLANS AND TITLE SHEET.
8. ORIGINAL DRAWINGS SHALL BECOME THE PROPERTY OF THE CITY UPON BEING SIGNED BY THE CITY ENGINEER.
9. THE ORIGINAL DRAWING SHALL BE REVISED TO REFLECT AS-BUILT CONDITIONS BY THE ENGINEER-OF-WORK PRIOR TO FINAL ACCEPTANCE OF THE WORK BY THE CITY.
10. ACCESS FOR FIRE AND OTHER EMERGENCY VEHICLES SHALL BE MAINTAINED TO THE PROJECT SITE AT ALL TIMES DURING CONSTRUCTION.
11. WHERE TRENCHES ARE WITHIN CITY EASEMENTS, A SOILS REPORT COMPRISED OF: (A) SUMMARY SHEET, (B) LABORATORY WORK SHEETS AND (C) COMPACTION CURVES, SHALL BE SUBMITTED BY A PROFESSIONAL ENGINEER OF THE STATE OF CALIFORNIA, PRINCIPALLY DOING BUSINESS IN THE FIELD OF APPLIED SOILS MECHANICS. THE SOILS REPORT WILL BE SUBMITTED TO THE CITY ENGINEERING INSPECTOR WITHIN TWO WORKING DAYS OF COMPLETION OF FIELD TESTS. THE WRITTEN FIELD COMPACTION REPORT(S) SHALL BE IMMEDIATELY SUBMITTED TO THE CITY ENGINEERING INSPECTOR UPON COMPLETION OF THE FIELD TESTS.
12. A PRECONSTRUCTION MEETING SHALL BE HELD AT THE SITE PRIOR TO THE BEGINNING OF WORK AND SHALL BE ATTENDED BY ALL REPRESENTATIVES RESPONSIBLE FOR CONSTRUCTION, INSPECTION, SUPERVISION, TESTING AND ALL OTHER ASPECTS OF THE WORK. THE CONTRACTOR SHALL SCHEDULE THE MEETING THROUGH THE PERMIT CLERK(438-3634) AT LEAST FIVE(5) WORKING DAYS PRIOR TO STARTING CONSTRUCTION. APPROVED DRAWINGS MUST BE AVAILABLE PRIOR TO SCHEDULING.
13. ALL INSPECTION REQUESTS OTHER THAN FOR PROGRESS STATUS OR MEETING WILL BE MADE BY CALLING THE INSPECTION LINE AND LEAVING A MESSAGE. INSPECTIONS WILL BE MADE THE NEXT WORK DAY UNLESS YOU REQUEST OTHERWISE. REQUESTS MADE AFTER 2:00 P.M. WILL BE SCHEDULED FOR TWO FULL WORK DAYS LATER.
14. THE OWNER AND/OR APPLICANT THROUGH THE DEVELOPER AND/OR CONTRACTOR SHALL DESIGN, CONSTRUCT AND MAINTAIN ALL SAFETY DEVICES, INCLUDING SHORING, AND SHALL BE SOLELY RESPONSIBLE FOR CONFORMING TO ALL LOCAL, STATE AND FEDERAL SAFETY AND HEALTH STANDARDS, LAWS AND REGULATIONS.
15. THE CONTRACTOR SHALL CONFORM TO LABOR CODE SECTION 6705 BY SUBMITTING A DETAIL PLAN TO THE CITY ENGINEER AND/OR CONCERNED AGENCY SHOWING THE DESIGN OF SHORING, BRACING SLOPING OR OTHER PROVISIONS TO BE MADE OF WORKER PROTECTION FROM THE HAZARD OF CAVING GROUND DURING THE EXCAVATION OF SUCH TRENCH OR TRENCHES OR DURING THE INSTALLATION THEREIN. THIS PLAN MUST BE PREPARED FOR ALL TRENCHES FIVE FEET (5') OR MORE IN DEPTH AND APPROVED BY THE CITY ENGINEER AND/OR CONCERNED AGENCY PRIOR TO EXCAVATION. IF THE PLAN VARIES FROM THE SHORING SYSTEM STANDARDS ESTABLISHED BY THE CONSTRUCTION SAFETY ORDERS, TITLE 8, CALIFORNIA ADMINISTRATIVE CODE, THE PLAN SHALL BE PREPARED BY AN ENGINEER AT THE CONTRACTORS EXPENSE. A COPY OF THE OSHA EXCAVATION PERMIT MUST BE SUBMITTED TO THE INSPECTOR PRIOR TO EXCAVATION.
16. IF ANY ARCHAEOLOGICAL RESOURCES ARE DISCOVERED WITHIN ANY WORK ZONE DURING CONSTRUCTION, OPERATIONS WILL CEASE IMMEDIATELY, AND THE PERMITTEE WILL NOTIFY THE CITY ENGINEER. OPERATIONS WILL NOT RESTART UNTIL THE PERMITTEE HAS RECEIVED WRITTEN AUTHORITY FROM THE CITY ENGINEER TO DO SO.
17. ALL OPERATIONS CONDUCTED ON THE SITE OR ADJACENT THERETO, INCLUDING WARMING UP, REPAIR, ARRIVAL, DEPARTURE OR OPERATION OF TRUCKS, EARTHMOVING EQUIPMENT, CONSTRUCTION EQUIPMENT AND ANY OTHER ASSOCIATED GRADING EQUIPMENT SHALL BE LIMITED TO THE PERIOD BETWEEN 7:00 A.M. AND SUNSET EACH DAY, MONDAY THRU FRIDAY AND NO EARTHMOVING OR GRADING OPERATIONS SHALL BE CONDUCTED ON WEEKENDS OR HOLIDAYS. (A LIST OF CITY HOLIDAYS IS AVAILABLE AT THE ENGINEERING DEPARTMENT COUNTER.)
18. ALL OFF-SITE HAUL ROUTES SHALL BE SUBMITTED BY THE CONTRACTOR TO THE CITY ENGINEER FOR APPROVAL TWO FULL WORKING DAYS PRIOR TO BEGINNING OF WORK. THE CONTRACTOR SHALL BE RESPONSIBLE FOR ANY DEBRIS OR DAMAGE OCCURRING ALONG THE HAUL ROUTE OR ADJACENT STREETS AS A RESULT OF THE GRADING OPERATION.
19. NO BLASTING SHALL BE COMMENCED WITHOUT A CITY ENGINEER APPROVED BLASTING PROGRAM.
20. THE EXISTENCE AND LOCATION OF UTILITY STRUCTURES AND FACILITIES SHOWN ON THE CONSTRUCTION PLANS WERE OBTAINED BY A SEARCH OF THE AVAILABLE RECORDS. ATTENTION IS CALLED TO THE POSSIBLE EXISTENCE OF OTHER UTILITY FACILITIES OR STRUCTURES NOT SHOWN OR IN A LOCATION DIFFERENT FROM THAT SHOWN ON THE PLANS. THE CONTRACTOR IS REQUIRED TO TAKE DUE PRECAUTIONARY MEASURES TO PROTECT THE UTILITIES SHOWN ON THE PLANS AND ANY OTHER EXISTING FACILITIES OR STRUCTURES NOT SHOWN.
21. THE CONTRACTOR SHALL VERIFY THE LOCATION OF ALL EXISTING FACILITIES (ABOVEGROUND AND UNDERGROUND) WITHIN THE PROJECT SITE SUFFICIENTLY AHEAD OF THE CONSTRUCTION TO PERMIT THE REVISIONS OF THE CONSTRUCTION PLANS IF IT IS FOUND THAT THE ACTUAL LOCATIONS ARE IN CONFLICT WITH THE PROPOSED WORK.
22. THE CONTRACTOR SHALL NOTIFY AFFECTED UTILITY COMPANIES (SEE BELOW) AT LEAST TWO FULL WORKING DAYS PRIOR TO STARTING CONSTRUCTION NEAR THEIR FACILITIES AND SHALL COORDINATE WORK WITH A COMPANY REPRESENTATIVE.

UNDERGROUND SERVICE ALERT	1-800-422-4133
SDG&E	(760)438-6200
PACIFIC BELL	1-800-422-4135
DANIELS CABLEVISION	(760)438-5241
OLIVENHAIN MUNICIPAL WATER DISTRICT	(760)753-6466
LEUCADIA COUNTY WATER DISTRICT	(760)753-0155
CARLSBAD MUNICIPAL WATER DISTRICT	(760)438-2722
CITY OF CARLSBAD	(760)602-2720

SCANNED DATE 3-2-04

HUNSAKER & ASSOCIATES
SAN DIEGO, INC
PLANNING 10179 Huennekens Street
ENGINEERING San Diego, Ca 92121
SURVEYING PH(858)558-4500 FX(858)558-1414

STREET NOTES

1. ACTUAL STRUCTURAL SECTIONS WILL BE DETERMINED AFTER "R" VALUE TESTS HAVE BEEN CONDUCTED BY A PROFESSIONAL ENGINEER OF THE STATE OF CALIFORNIA, PRINCIPALLY DOING BUSINESS IN THE FIELD OF APPLIED SOIL MECHANICS, ON THE PREPARED BASEMENT SOIL. THE "R" VALUE TESTS AND THE ENGINEERED STRUCTURAL SECTION MUST BE SUBMITTED TO THE ENGINEERING INSPECTOR FOR REVIEW AND APPROVAL A MINIMUM OF TWO (2) CITY WORKING DAYS BEFORE THE WORK BEGINS.
2. STREET LIGHTS SHALL BE INSTALLED AS SHOWN ON THESE PLANS. UNDERGROUND CONDUIT RUNS, SERVICE POINTS AND HAND-HOLES SHALL BE SHOWN ON THE "AS-BUILT" PLANS. NO DIRECT BURIAL STREET LIGHT FOUNDATIONS WILL BE ALLOWED. ALL LUMINAIRES SHALL BE "CUT OFF" TYPE.
3. ALL UNDERGROUND UTILITIES AND LATERALS SHALL BE INSTALLED PRIOR TO CONSTRUCTION OF CURBS, CROSS GUTTERS OR SURFACING OF STREETS.
4. STORM DRAIN PIPE SHALL BE REINFORCED CONCRETE PIPE WITH A MINIMUM D-LOAD OF 1,350 OR ASBESTOS CEMENT PIPE WITH A MINIMUM D-LOAD OF 2 TIMES THE MINIMUM D-LOAD REQUIRED FOR RCP.
FOR PRIVATE STORM DRAIN PIPES, UP TO 15" PVC MAY BE UTILIZED PROVIDED DEPTH IS LESS THAN 15 FEET AND BACKFILLED WITH 3/4" ROCK PER SDRSD S-4 TYPE "C" AND PIPE MEETS ASTM STANDARD 3034 FOR SDR 35 SOLID WALL PIPE.
5. WHERE AN EXISTING PIPE LINE IS TO BE ABANDONED IT SHALL BE REMOVED WITHIN TWENTY FEET OF BUILDING OR STREET AREAS AND REPLACED WITH PROPERLY COMPACTED SOILS. IN OTHER AREAS THE PIPE WILL BE PLUGGED WITH CONCRETE OR REMOVED AS APPROVED BY THE CITY ENGINEER.
6. WHEELCHAIR RAMPS SHALL BE INSTALLED PER REQUIREMENTS OF TITLE 24, CALIFORNIA ADMINISTRATIVE CODE.
7. STREET TREES SHALL BE INSTALLED PER SECTION IV D.3 OF THE CITY OF CARLSBAD LANDSCAPE MANUAL.
8. FIRE HYDRANT MARKERS SHALL BE PLACED IN THE STREET WITHIN THE LIMITS OF WORK OF THIS PLAN PER SDRS DWG M19.
9. ALL SURVEY MONUMENTS AND POINTS THAT ARE DISTURBED BY THIS WORK SHALL BE RE-ESTABLISHED, PERPETUATED, AND DOCUMENTED PER THE PROFESSIONAL LAND SURVEYORS ACT.
10. TWO (2) SETS OF SURVEY (CUT) SHEETS SHALL BE PROVIDED TO THE CITY ENGINEERING INSPECTOR.

"DECLARATION OF RESPONSIBLE CHARGE"

I HEREBY DECLARE THAT I AM THE ENGINEER OF WORK FOR THIS PROJECT, THAT I HAVE EXERCISED RESPONSIBLE CHARGE OVER THE DESIGN OF THE PROJECT AS DEFINED IN SECTION 6703 OF THE BUSINESS AND PROFESSIONS CODE, AND THAT THE DESIGN IS CONSISTENT WITH CURRENT STANDARDS.

I UNDERSTAND THAT THE CHECK OF PROJECT DRAWINGS AND SPECIFICATIONS BY THE CITY OF CARLSBAD DOES NOT RELIEVE ME, AS ENGINEER OF WORK, OF MY RESPONSIBILITIES FOR PROJECT DESIGN.

FIRM: HUNSAKER & ASSOCIATES

ADDRESS: 10179 HUENNEKENS AVE

CITY, ST.: SAN DIEGO, CA

TELEPHONE: (858) 558-4500

BY: Raymond L. Martin DATE: 2/10/03
RAYMOND L. MARTIN

P.E. NO.: RCE 48670

EXPIRATION DATE: 6/30/04

REGISTERED PROFESSIONAL ENGINEER RAYMOND L. MARTIN NO. 48670 EXP. 6/30/04 CIVIL STATE OF CALIFORNIA

REFERENCE DRAWINGS

CITY OF CARLSBAD DRAWING 397-1B
OMWD IMPROVEMENT NO. 1 UNIT G

SOURCE OF TOPOGRAPHY

R. J. LUNG AND ASSOCIATES
DATED APRIL 2000 AND THE ROUGH GRADING PLANS (DRAWING 397-1A)

OWNERS / PERMITTEES

REAL ESTATE COLLATERAL MANAGEMENT COMPANY,
A DELAWARE CORPORATION
1903 WRIGHT PLACE
SUITE 180
CARLSBAD, CA 92008
(760) 929-270

LEGAL DESCRIPTION

LA COSTA OAKS NEIGHBORHOODS 3.10 AND 3.11 (CT 02-02)

BEING A SUBDIVISION OF LOTS 171 AND 172 OF CITY OF CARLSBAD TRACT CT 99-04-01, VILLAGES OF LA COSTA - LA COSTA OAKS SOUTH, IN THE CITY OF CARLSBAD, COUNTY OF SAN DIEGO, STATE OF CALIFORNIA, ACCORDING TO MAP THEROF NO. 14379 FILED IN THE OFFICE OF THE SAN DIEGO COUNTY RECORDER ON APRIL 29, 2002 AS FILE NO. 2002-0358064 OF OFFICIAL RECORDS.

PROJECT LOCATION

THIS PROJECT IS LOCATED WITHIN ASSESSORS PARCEL NUMBER(S)
223-071-05(POR) 223-071-07(POR) 223-071-09(POR) 223-050-69(POR)

THE CALIFORNIA COORDINATE INDEX OF THIS PROJECT IS
N 1978 E 6268

BASIS OF BEARINGS

THE BASIS OF BEARINGS FOR THIS SURVEY IS THE CALIFORNIA COORDINATE SYSTEM - 1983, ZONE VI, 1991.35 EPOCH, NORTH AMERICAN DATUM OF 1983 (NAD83), GRID BEARINGS BETWEEN STATION 147 AND STATION 152 AS SAID COORDINATES ARE PUBLISHED IN THE CITY OF CARLSBAD SURVEY CONTROL NETWORK ESTABLISHED BY COUNTY RECORDER ON FEBRUARY 8, 2002.
IE: N 04°55'39" W
REFERNCED BEARINGS FROM OTHER DOCUMENTS/DEEDS MAY OR MAY NOT BE IN TERMS OF SAID SYSTEM THE COMBINED SCALE FACTOR AT STATION 147 IS 0.99993947. GRID DISTANCE = GROUND DISTANCE X COMBINED SCALE FACTOR.

SHEET INDEX

NOTES AND LEGEND	SHEET 1
KEY MAP AND SECTIONS	SHEET 2
IMPROVEMENTS	SHEET 3-9
SEWER LATERAL TABLE	SHEET 10

ENGINEER'S NOTES

1. NEITHER THE OWNER, NOR THE ENGINEER OF WORK WILL ENFORCE SAFETY MEASURES OR REGULATIONS. THE CONTRACTOR SHALL DESIGN, CONSTRUCT AND MAINTAIN ALL SAFETY DEVICES, INCLUDING SHORING, AND SHALL BE SOLELY RESPONSIBLE FOR CONFORMING TO ALL LOCAL, STATE AND FEDERAL SAFETY AND HEALTH STANDARDS, LAWS AND REGULATIONS.
2. CONTRACTOR HAS SOLE AND COMPLETE RESPONSIBILITY FOR JOB SITE CONDITIONS DURING THE COURSE OF CONSTRUCTION OF THIS PROJECT, INCLUDING SAFETY OF ALL PERSONS AND PROPERTY. THIS REQUIREMENT SHALL APPLY CONTINUOUSLY AND NOT BE LIMITED TO NORMAL WORKING HOURS. THE CONTRACTOR SHALL DEFEND, INDEMNIFY AND HOLD THE ENGINEER HARMLESS FROM ANY AND ALL LIABILITY, REAL OR ALLEGED, IN CONNECTION WITH THE PERFORMANCE OF THE WORK ON THIS PROJECT, EXCEPTING LIABILITY ARISING FROM THE SOLE NEGLIGENCE OF THE ENGINEER.
3. THE CONTRACTOR IS RESPONSIBLE TO INSURE THAT ALL SLOPES, STREETS, UTILITIES, AND STORM DRAINS ARE BUILT IN ACCORDANCE WITH THESE PLANS. IF THERE IS ANY QUESTION REGARDING THESE PLANS OR FIELD STAKES, THE CONTRACTOR SHALL REQUEST AN INTERPRETATION BEFORE DOING ANY WORK BY CALLING THE ENGINEER OF WORK AT 558-4500. THE CONTRACTOR SHALL ALSO TAKE THE NECESSARY STEPS TO PROTECT THE PROJECT AND ADJACENT PROPERTY FROM ANY EROSION AND SILTATION THAT MIGHT RESULT FROM HIS OPERATIONS BY APPROPRIATE MEANS (GRAVEL BAGS, HAY BALES, TEMPORARY DESILTING BASINS, DIKES, SHORING, ETC.) UNTIL SUCH TIME THE PROJECT IS COMPLETED AND ACCEPTED FOR MAINTENANCE BY THE OWNER.
4. THE EXISTENCE AND LOCATION OF UNDERGROUND UTILITIES SHOWN HEREON WERE OBTAINED BY A SEARCH OF THE AVAILABLE RECORDS. TO THE BEST OF OUR KNOWLEDGE, THERE ARE NO OTHER EXISTING UTILITIES EXCEPT AS SHOWN ON THESE PLANS. BEFORE EXCAVATING FOR THIS CONTRACT, THE CONTRACTOR SHALL MAKE EXPLORATORY EXCAVATIONS AND VERIFY THE HORIZONTAL AND VERTICAL LOCATION OF ALL UNDERGROUND UTILITIES AFFECTING THE WORK, WHETHER SHOWN ON THE PLANS OR NOT. SPECIFIC ATTENTION SHALL BE MADE IN AREAS WHERE THE PROPOSED IMPROVEMENTS MEET EXISTING. CONTRACTOR SHALL NOTIFY THE ENGINEER OF WORK OF ANY DEVIATIONS PRIOR TO ORDERING MATERIALS FOR THE PROJECT, AND ALLOW SUFFICIENT TIME FOR REVISION TO THESE PLANS IF AS-BUILT LOCATION OF EXISTING UTILITIES REQUIRE CHANGES TO THE DESIGN.
5. CONTRACTOR SHALL TAKE PRECAUTIONARY MEASURES TO PROTECT EXISTING ABOVE GROUND AND UNDERGROUND IMPROVEMENTS SHOWN HEREON AS WELL AS EXISTING UTILITIES NOT SHOWN HEREON. CONTRACTOR SHALL REPAIR OR REPLACE ITEMS REQUIRED TO REMAIN IN PLACE WHICH ARE DAMAGED, DURING THE COMPLETION OF THE WORK, TO THE SATISFACTION OF THE APPROPRIATE AGENCY.
6. WHERE TRENCHES ARE ADJACENT TO FUTURE BUILDING SITES, A LICENSED SOILS ENGINEER SHALL BE RETAINED BY THE OWNER TO COMPLETE NECESSARY TESTING TO CERTIFY THAT TRENCH BACKFILL WAS COMPACTED AS DIRECTED IN THE PRELIMINARY SOILS REPORT.
7. THESE PLANS SHOWN THE MINIMUM IMPROVEMENT REQUIRED BY THE APPROVING AUTHORITY IN ORDER TO OBTAIN PROJECT APPROVAL. FIELD CONDITIONS MAY DICTATE ADDITIONAL IMPROVEMENTS. THE COST OF ANY ADDITIONAL IMPROVEMENTS SHALL BE BORNE BY THE CONTRACTOR. ANY ADDITIONAL TESTING BY THE SOILS ENGINEER OR OTHER PROFESSIONALS SHALL BE COMPLETED AT THE CONTRACTOR EXPENSE.
8. PRIOR TO ORDERING MATERIALS OR BEGINNING CONSTRUCTION, WHICHEVER OCCURS FIRST, THE CONTRACTOR SHALL NOTIFY THE ENGINEER OF WORK IN WRITING, WHENEVER THESE PLANS SEEM UNCLEAR.

LEGEND OF ABBREVIATIONS

TC	TOP OF CURB
GB	GRADE BREAK
BVC	BEGIN VERTICAL CURVE
EVC	END VERTICAL CURVE
VPI	VERTICAL POINT OF INTERSECTION
BC	BEGIN CURVE
EC	END CURVE
HP	HIGH POINT
LP	LOW POINT
FL	FLOW LINE
DWY	DRIVEWAY
FS	FINISHED SURFACE
PRC	POINT OF REVERSE CURVE
ST.	STREET
RT	RIGHT
LT	LEFT
TW	TOP OF WALL
PCR	POINT CURB RETURN
MVC	MODIFIED VERTICAL CURVE
CL	CENTERLINE
BW	BOTTOM OF WALL
N.T.S.	NOT TO SCALE
CTB	CEMENT TREATED BASE
RP	RADIUS POINT
EOP	EDGE OF PAVEMENT
CDS	CUL-DE-SAC STATIONING
RCP	REINFORCED CONCRETE PIPE
SD	STORM DRAIN
KNU	KNUCKLE STATIONING
CC	CENTER OF CUL-DE-SAC

ENGINEER'S NOTES (CONT.)

9. THE CONTRACTOR SHALL NOTIFY THE SURVEYORS 48 HOURS PRIOR TO BACKFILLING TRENCHES FOR ALL NEW UTILITIES. THE SURVEYOR SHALL OBTAIN NECESSARY FIELD SHOTS TO PROVIDE THE ENGINEER OF WORK WITH A LETTER OF CERTIFICATION STATING THAT ALL IMPROVEMENTS ARE CONSTRUCTED IN SUBSTANTIAL CONFORMANCE WITH THE LINES AND GRADES SHOWN HEREON. THE CERTIFICATION SHALL INCLUDE ALL ITEMS REQUIRED BY THE APPROVING AUTHORITY.
10. THE GENERAL CONTRACTOR IS REQUIRED TO KEEP AND MAINTAIN A SIGNED SET OF THESE PLANS ONSITE AT ALL TIMES FOR USE BY THE ENGINEER OF WORK, SOILS ENGINEER AND THE CITY INSPECTOR. THE GENERAL CONTRACTOR'S SUPERINTENDANT IS REQUIRED TO UPDATE SAID PLANS WITH AS-BUILT ON A DAILY BASIS AS WORK PROGRESSES. SAID PLANS SHALL BE CERTIFIED BY THE SUPERINTENDENT AS ACCURATE AND COMPLETE UPON COMPLETION OF THE PROJECT, AND BECOME THE PROPERTY OF THE ENGINEER OF WORK.
11. STATIONING OF DRIVEWAYS, LATERALS AND PROPERTY LINES ON CUL DE SAC'S AND KNUCKLES ARE AT THE RIGHT OF WAY. PRC AND PCR STATIONS ARE AT THE CURB.
12. RETAINING WALLS, IF SHOWN HEREON, ARE INCLUDED AS SUPPLEMENTARY INFORMATION. DETAILED PLANS, A SEPARATE PERMIT AND INSPECTION IS REQUIRED FROM THE BUILDING DEPARTMENT FOR ALL RETAINING WALLS.
13. THE SOILS REPORT AND ALL THE SUPPLEMENTS THEREOF ARE INCORPORATED INTO AND MADE A PART OF THIS PLAN. ALL CONSTRUCTION SHALL CONFORM WITH AND BE SUBJECT TO ANY TESTING OR INSPECTION REQUIREMENTS IN THE REPORT.
14. CONTRACTOR SHALL INSTALL THRUST BLOCKS AT ALL ANGLE POINTS AND TEES IN WATER SYSTEMS PURSUANT TO THE APPROPRIATE WATER DISTRICT STANDARD.
15. CONTRACTOR SHALL SUBMIT AN AS-BUILT PLAN INDICATING ALL STREET LIGHT CONDUIT RUNS, ACCESS POINTS, HAND HOLES AND SERVICE POINTS PRIOR TO ENERGIZING THE SYSTEM.
16. ALL SEWER LINE BEDDING SHALL BE 3/4" BACKFILL PER SDRSD S-6, TYPE C. PVC SEWER PIPE SHALL MEET ASTM STD. 3034 FOR SDR 35 SOLID WALL PIPE.

STORM DRAIN NOTES

1. STORM DRAIN PROFILES SHOW A GRAPHICAL REPRESENTATION OF THE CALCULATED HGL DURING THE DESIGN STORM, AS REQUIRED BY THE CITY. THE CALCULATED HGL CAN BE FOUND IN THE APPROVED STORM DRAINAGE REPORT ON FILE AT THE OFFICE OF THE CITY ENGINEER. ENGINEER IS NOT RESPONSIBLE FOR USE OF THE HGL SHOWN HEREON, BY OTHERS, WHEN MAKING ADDITIONAL CONNECTIONS OR REALIGNING THE SYSTEM. CHANGES TO THE SYSTEM, REQUIRE APPROVAL OF A REGISTERED ENGINEER RESPONSIBLE FOR THE REVISIONS.
2. STORM DRAIN PIPES DESIGNATED AS HAVING THE HGL AT OR ABOVE THE PIPE SOFFIT SHALL BE CONSTRUCTED WITH WATER TIGHT JOINTS WITH AMERON REINFORCE CONCRETE PIPE WITH REINFORCED THERMOSETTING RESIN (RTR) COUPLING OR EQUAL FOR THE ENTIRE REACH. COUPLING SHALL MEET THE REQUIREMENTS OF ASTM C76, C361, AND C443.
3. STORM DRAIN PIPES WITH VELOCITIES EXCEEDING 20 FEET PER SECOND SHALL HAVE A MINIMUM COVER OF 1-1/2 INCH OVER THE INVERT REINFORCING STEEL. THE CONCRETE DESIGN STRENGTH IN THESE REACHES SHALL BE f'c = 5,000 PSI. FOR VELOCITIES EXCEEDING 30 FEET PER SECOND, USE f'c = 6,000 PSI.

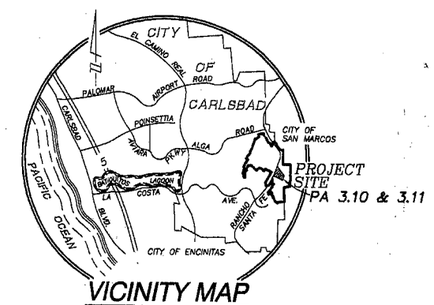

VICINITY MAP
N.T.S.

WORK TO BE DONE

THE IMPROVEMENT WORK SHALL BE PERFORMED IN ACCORDANCE WITH THE FOLLOWING DOCUMENTS, CURRENT AT THE TIME OF CONSTRUCTION, AS DIRECTED BY THE CITY ENGINEER.

1. CARLSBAD MUNICIPAL CODE.
2. CITY OF CARLSBAD STANDARDS.
3. THIS SET OF PLANS.
4. THE STANDARD SPECIFICATIONS FOR PUBLIC WORKS CONSTRUCTION (GREEN BOOK).
5. SOILS REPORT AND RECOMMENDATIONS BY GEOCON, INC. SOILS AND TESTING, INC. DATED, AUGUST 3, 2001, UPDATED JAN. 7, 2003.
6. THE SAN DIEGO AREA REGIONAL STANDARD DRAWINGS AND AS MAY BE MODIFIED BY THE CITY OF CARLSBAD STANDARDS.
7. FINAL PROGRAM EIR 98-07.
8. THE OLIVENHAIN MUNICIPAL WATER DISTRICT STANDARDS AND SPECIFICATIONS FOR CONSTRUCTION OF WATER AND RECLAIMED WATER SYSTEMS.
9. THE LEUCADIA COUNTY WATER DISTRICT STANDARDS AND SPECIFICATIONS FOR CONSTRUCTION OF SEWER SYSTEMS.
10. IN ACCORDANCE WITH CITY OF CARLSBAD RESOLUTION NUMBERS 5011, 5012, 5013, 5014 5015, 5020, 5021, 5022, 5283, AND 5284 DATED SEPTEMBER 5, 2001.

LEGEND

DESCRIPTION	STD. DWG.	SYMBOL	QUANTITY
SUBDIVISION BOUNDARY			
RIGHT OF WAY LINE			
PROPERTY LINE			
EASEMENT LINE			
A.C. PAVING/BASE			126,727 S.F.
6" CURB & GUTTER	G-2		6,948 L.F.
PEDESTRIAN RAMP TYPE "A"	G-27		4 E.A.
CROSS GUTTER	G-12		1,190 S.F.
MODIFIED CROSS GUTTER	GS-10**		
CONCRETE SIDEWALK	G-7, G-9, G-10		29,866 S.F.
DRIVEWAY	G-14**		12,411 S.F.
STREET LIGHT 9,500 LUM (HPSV)	E-1**, E-2, M-21		14 E.A.
STREET CENTERLINE MONUMENT	M-10		18 E.A.
EXISTING STORM DRAIN			
STORM DRAIN			2,103 L.F.
CURB INLET TYPE "B"	D-2**, DS-1		2 E.A.
CURB INLET TYPE "B-1"	D-2**, DS-1		6 E.A.
CURB INLET TYPE "B-2"	D-2**, DS-1		1 E.A.
CATCH BASIN TYPE "F"	D-7		3 E.A.
CONCRETE LUG	D-63		1 E.A.
TYPE D-34 HEADWALL	D-34		2 E.A.
CLEANOUT TYPE "A-4"	D-9		9 E.A.
PROPOSED SEWER MAIN(SDR 35)	*S-11, S-12	S	2,895 L.F.
PROPOSED SEWER MANHOLE	*S-3, *S-4, S-4	S	12 E.A.
PROPOSED SEWER CLEANOUT	S-3	S	1 E.A.
EXISTING SEWER		S	
SEWER LATERAL W/TRAFFIC LID	*S-17, S-18	S	67 E.A.
EXISTING WATER LINE		W	
PROPOSED WATER MAIN	**E-3.1	W	3,373 L.F.
GATE VALVE.	***D-2.2		4 E.A.
FIRE HYDRANT ASSEMBLY WITH MARKER	***C-1.1	FH	9 E.A.
1" WATER SERVICE	***B-1.1	W	79 E.A.
END CAP ASSEMBLY	***D-3.3		3 E.A.
PO x PO x FLANGE TEE W/FLANGE VALVE	***D-3.3		
2" MANUAL AIR RELEASE	***A-2.3	MAR	
2" BLOW OFF ASSEMBLY	***A-1.1	BO	
2" IRRIGATION METER		IM	1 E.A.
PO X PO REDUCER	***D-3.1	1 E.A.	1 E.A.
STREET SIGN. (TYPE PER PLAN) PER CAL TRANS TRAFFIC MANUAL	SDM-102		
12" WHITE LIMIT LINE, "STOP" PAVEMENT LEGEND PER CAL TRANS TRAFFIC MANUAL (THERMOPLASTIC)		STOP	

* LOWD STANDARD DRAWING
* * AS MODIFIED BY THE CITY OF CARLSBAD STANDARDS
* * * OMWD STANDARD DRAWING

FIRE HYDRANT LAYOUT PLAN

ENGINEER OF WORK
Raymond L. Martin 2/10/03
RAYMOND L. MARTIN DATE
R.C.E. NO. 48670 EXP. 6/30/04

OLIVENHAIN MUNICIPAL WATER DISTRICT
POTABLE WATER SYSTEM APPROVAL
(OMWD W.O.# 559510)
Approved by: BOYLE ENGINEERING CORPORATION
District's Consulting Engineer
Andrew K. Brown 2/10/03 SD-001-516-12
R.C.E. DATE JOB NUMBER
Note: Signature Expires 2 Years After Date

LEUCADIA COUNTY WATER DISTRICT
PUBLIC SEWER SYSTEM APPROVAL
APPROVED BY: LCWD DISTRICT ENGINEER
Stephen L. Deering 2/25/03
STEVE DEERING R.C.E. 26514 DATE
DUDEK AND ASSOCIATES EXP. 03/31/04

CARLSBAD FIRE DEPARTMENT
REQUIREMENTS:
NUMBER OF F.H.'S 8 F.FLOW 1500 G.P.M. OUT OF 1 F.H.'S
OR
BLDG. SPRINKLED? YES. NO X F.FLOW G.P.M.
FIRE MARSHAL 3-2-03 DATE

"AS BUILT"
RCE EXP. DATE
REVIEWED BY:
INSPECTOR DATE

BENCH MARK
DESCRIPTION: U.S.C. & G.X. BRASS DISC STAMPED "K302., 1935" IN CONC. MON.
LOCATION: POINT LIES 8.8' EASTERLY OF EASTERN BERM LINE ON RANCHO SANTA FE ROAD, 133' NORTHERLY OF ELECTRIC TRANSMISSION LINE POLE MARKED "TL23011" AND "TL13825" AND APPROXIMATELY 1.2 MILES NORTHERLY OF THE INTERSECTION OF RANCHO SANTA FE ROAD AND LA COSTA AVENUE.
ELEVATION: 533.39 NGVD 29 MSL

IMPORTANT NOTICE
SECTION 4216/4217 OF THE GOVERNMENT CODE REQUIRES A DIGALERT IDENTIFICATION NUMBER BE ISSUED BEFORE A PERMIT TO EXCAVATE WILL BE VALID. FOR YOUR DIGALERT I.D. NUMBER CALL UNDERGROUND SERVICE ALERT AT:
TOLL FREE 1-800-422-4133
TWO WORKING DAYS BEFORE YOU DIG

DATE	INITIAL	REVISION DESCRIPTION	DATE	INITIAL	DATE	INITIAL
05/04/03	RLM	1 REVISE SEWER LATERALS SHTS 3-10	2/10/04	RLD		
09/04/03

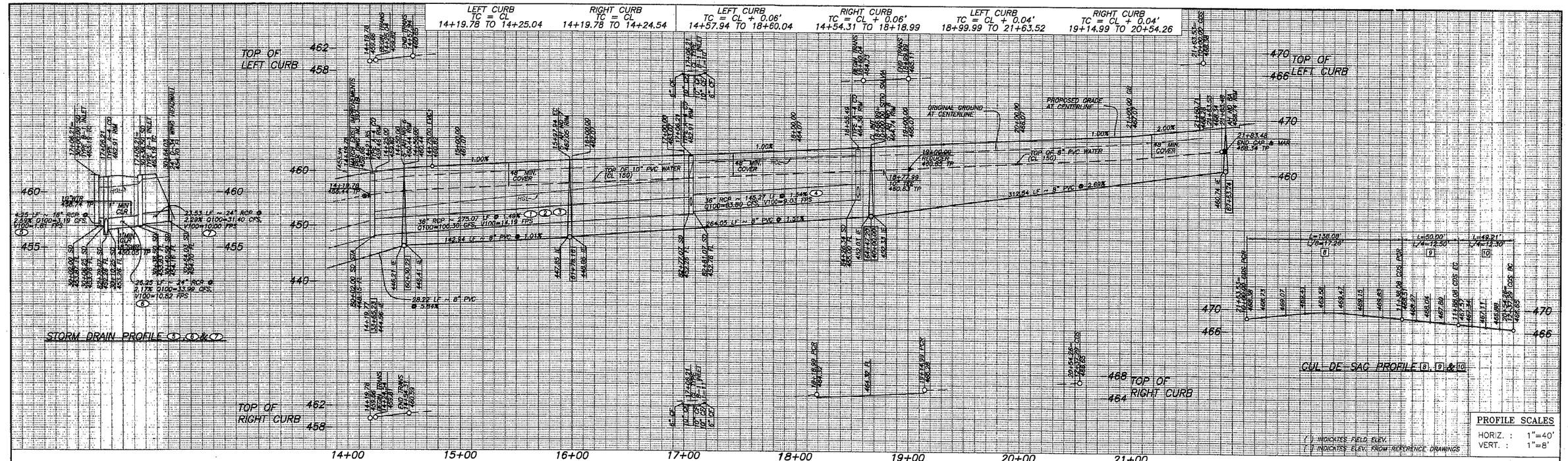

WATER SERVICE STATIONING		
LOT NUMBER	CDS STA	℄ STATION
13	10+40.64	21+71.60
14	10+44.94	12+76.60
15	10+97.63	21+64.99
16	11+07.06	21+59.99
17	11+65.57	21+21.52

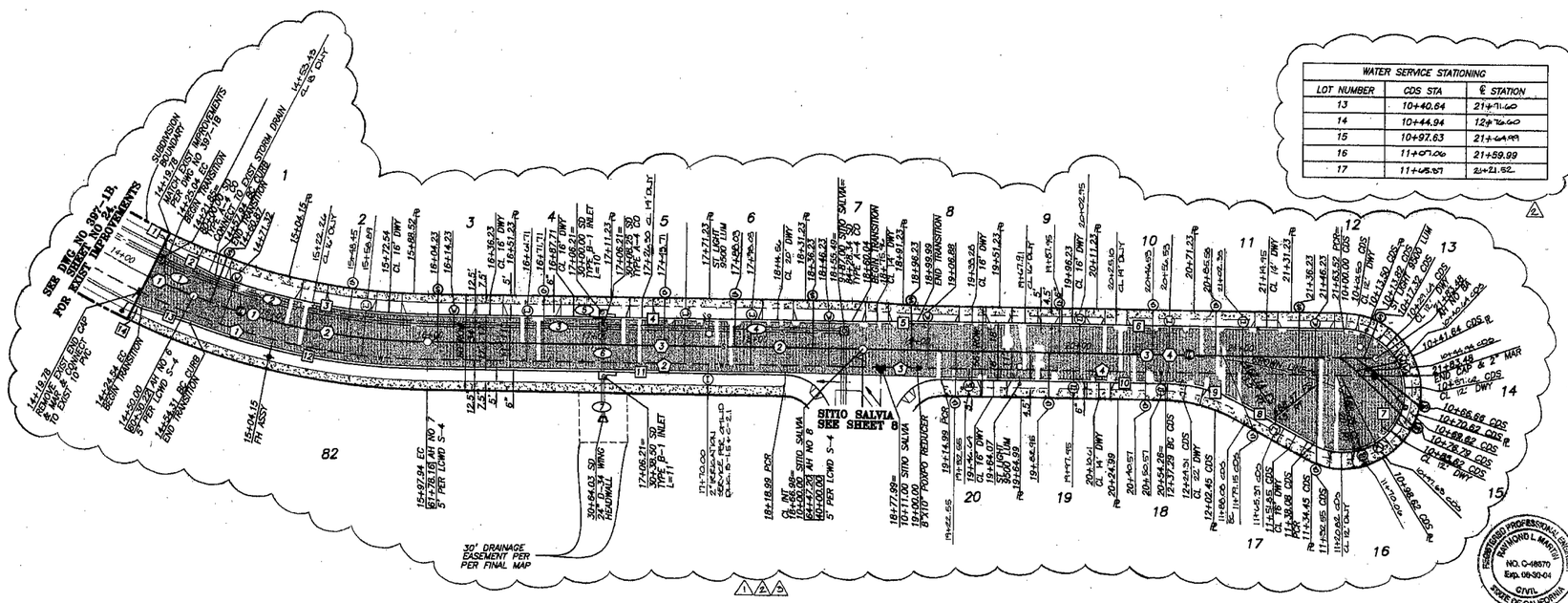

CENTERLINE DATA

	BEARING/DELTA	RADIUS	LENGTH	REMARKS
1	25°31'12"	400.00'	178.16'	
2	N 57°05'00" W		269.04'	
3	N 57°05'00" W		296.54'	

CURB DATA

	BEARING/DELTA	RADIUS	LENGTH	REMARKS
1	0°45'14"	380.00'	5.00'	6" TYPE G C&G
2	N 29°12'51" W		31.51'	6" TYPE G C&G
3	20°03'15"	383.00'	134.05'	6" TYPE G C&G
4	N 57°05'00" W		262.09'	6" TYPE G C&G
5	N 58°31'02" W		39.96'	6" TYPE G C&G
6	N 57°05'00" W		263.54'	6" TYPE G C&G
7	208°11'45"	38.00'	138.08'	6" TYPE G C&G
8	N 28°53'15" W		50.00'	6" TYPE G C&G
9	28°11'45"	100.00'	49.21'	6" TYPE G C&G
10	N 57°05'00" W		139.27'	6" TYPE G C&G
11	N 57°05'00" W		221.04'	6" TYPE G C&G
12	20°34'29"	417.00'	149.74'	6" TYPE G C&G
13	N 39°52'39" W		31.28'	6" TYPE G C&G
14	0°40'56"	420.00'	5.00'	6" TYPE G C&G

WATER DATA

	BEARING/DELTA	RADIUS	LENGTH	REMARKS
1	25°31'12"	411.00'	183.06'	10" PVC CL 150
2	N 57°05'00" W		280.04'	10" PVC CL 150
3	N 57°05'00" W		22.01'	10" PVC CL 150
4	N 57°05'00" W		271.99'	8" PVC CL 150

STORM DRAIN DATA

	BEARING/DELTA	RADIUS	LENGTH	REMARKS
1	N 32°04'04" W		3.45'	36" RCP D-1350*
2	25°00'56"	390.00'	170.28'	36" RCP D-1350*
3	N 57°05'00" W		101.34'	36" RCP D-1350*
4	N 57°05'00" W		145.27'	36" RCP D-1350*
5	N 32°55'00" E		4.25'	18" RCP D-1350*
6	N 32°55'00" E		28.25'	24" RCP D-1350*
7	N 31°38'42" E		23.53'	24" RCP D-1350*

* WATER TIGHT JOINTS

SEWER DATA

	BEARING/DELTA	RADIUS	LENGTH	REMARKS
1	4°19'43"	400.00'	30.22'	8" PVC
2	21°11'29"	400.00'	147.94'	8" PVC
3	N 57°05'00" W		269.04'	8" PVC
4	N 57°05'00" W		316.54'	8" PVC

ENGINEER OF WORK

RAYMOND L. MARTIN — DATE 2/10/03
R.C.E. NO. 48670 EXP. 6/30/04

"AS BUILT"

RCE _____ EXP. _____ DATE

REVIEWED BY:

INSPECTOR — DATE

REGISTERED PROFESSIONAL ENGINEER RAYMOND L. MARTIN NO. C-48670 Exp. 06-30-04 CIVIL STATE OF CALIFORNIA

HUNSAKER & ASSOCIATES SAN DIEGO, INC
PLANNING ENGINEERING SURVEYING
10179 Huennekens Street San Diego, Ca 92121 PH(858)558-4500 · FX(858)558-1414

DATE	INITIAL	REVISION DESCRIPTION	DATE	INITIAL	DATE	INITIAL
09/04/00	RLM	4 REVISE SEWER LATERALS	2/18/04	RLM		
09/04/00	RLM	2 REVISE WATER SERVICE + IRRIGATION	2/11/04	RLM		
09/04/00	RLM	1 REVISE DRIVEWAYS			2/23/04	RLM
ENGINEER OF WORK			OTHER APPROVAL		CITY APPROVAL	

SHEET 7 — CITY OF CARLSBAD, ENGINEERING DEPARTMENT — SHEETS 10

IMPROVEMENT AND UTILITY PLANS FOR:
VILLAGES OF LA COSTA-LA COSTA OAKS SOUTH-NEIGHBORHOODS 3.10-3.11

APPROVED LLOYD HUBBARD
CITY ENGINEER RCE 28889 EXP. 12/31/05 — DATE 5/6/03

DWN BY: — CHKD BY: — RVWD BY: — PROJECT NO. CT 02-02 — DRAWING NO. 399-6

SCANNED DATE 2-2-04

R:\0296\&Eng\Improvements\0296lo07.dwg[1275]Feb-11-2003:15:40 W.O. No. 2352-39 BIN :

H&A 4/7/04

VOLUME 3 – STANDARD DRAWINGS and SPECIFICATIONS

CHAPTER 6 – CONSTRUCTION SPECIFICATIONS

STANDARD SPECIFICATIONS FOR POTABLE WATER, RECYCLED WATER, AND SEWER FACILITIES

TABLE OF CONTENTS

Division Section	Section Name	Pages
Division 02	**Site Work**	
02223	Trenching, Excavation, Backfilling, and Compacting	1-9
Division 03	**Concrete**	
03000	Cast-In-Place Concrete	1-9
03460	Precast Concrete Sewer Manholes	1-7
Division 09	**Finishes**	
09870	Tape Coating System with Mortar Shield for the Exterior of Steel Water Pipelines	1-9
09900	Painting and Coating	1-9
09902	Petrolatum Wax Tape Coating	1-2
Division 15	**Mechanical**	
15000	General Piping System and Appurtenances	1-15
15041	Disinfection of Piping	1-6
15043	Testing of Gravity Sewer Pipelines	1-3
15044	Hydrostatic Testing of Pressure Pipelines	1-4
15056	Ductile-Iron Pipe and Fittings	1-8
15057	Copper Tubing, Brass and Bronze Pipe Fittings	1-3
15061	Cement-Mortar Lined and Coated Steel Pipe and Specials	1-17
15063	Polyvinyl Chloride (PVC) Gravity Sewer Pipe	1-6
15064	Polyvinyl Chloride (PVC) AWWA C-900 Pressure Pipe	1-4
15066	Polyvinyl Chloride (PVC) AWWA C-905 Pressure Pipe	1-4
15068	High Density Polyethylene (PE 3408) Pipe	1-5
15074	Blowoff Assemblies	1-2
15092	Miscellaneous Couplings, Pipe and Appurtenances	1-2
15099	Process Valves, Regulators and Miscellaneous Valves	1-5
15100	Resilient Wedge Gate Valves (RWGV's)	1-5
15102	Butterfly Valves (BFV's)	1-6
15108	Air Release Valve, Air and Vacuum Valve and Combination Air Valve Assemblies	1-4
15112	Backflow Prevention Assemblies	1-4
15121	Open Trench Casing	1-5
15125	Jacked Pipe Casing	1-6
15139	Fire Hydrants	1-3
Division16	**Electrical**	
16640	Cathodic Protection by Sacrificial Anodes	1-10

SECTION 02223 TRENCHING, EXCAVATION, BACKFILLING, AND COMPACTING

PART 1 GENERAL

1.1 DESCRIPTION

This section includes materials, testing, and installation for trench excavation, backfill, and compaction of piping, conduit, manholes, and vaults.

1.2 REFERENCE STANDARDS

The publications listed below form part of this specification to the extent referenced and are referred to in the text by the basic designation only. Reference shall be made to the latest edition of said standards unless otherwise called for.

ASTM C 131 - Test Method for Resistance to Degradation of Small-Size Coarse Aggregate by Abrasion and Impact in the Los Angeles Machine
ASTM C 150 - Portland Cement
ASTM D 75 - Practice for Sampling Aggregates
ASTM 1556 - Test Method for Density and Unit Weight of Soil in Place by the Sand-Cone method
ASTM D 1557 - Test Method for Moisture-Density Relations of Soils Using a Modified Effort
ASTM D 2419 - Test Method for Sand Equivalent Values of Soil and Fine Aggregate
ASTM D 3017 - Test Method for Water Content of Soil and Rock in Place by Nuclear Methods
ASTM D 3776 - Test Method for Mass Per Unit Area (Weight) of Woven Fabric
ASTM D 4253 - Test Methods for Maximum Index Density and Unit Weight of Soils Using a Vibratory Plate
ASTM D 4254 - Test Methods for Minimum Index Density and Unit Weight of Soils and Calculation of Relative Density
ASTM D 4632 - Test Method for Grab Breaking Load and Elongation of Geotextiles
ASTM D 4751 - Test Method for Determining the Apparent Opening Size of a Geotextile
CAL-OSHA - Title 8 General Industry Safety Orders

1.3 RELATED WORK SPECIFIED ELSEWHERE

Standard Specifications 15000, 15043, 15044, 15056, 15061, 15063, 15064, and 15066

1.4 GEOTECHNICAL TESTING

The Developer or Contractor shall engage the services of a geotechnical engineering firm or individual licensed in the State of California to monitor soil conditions during earthwork, trenching, bedding, backfill, and compaction operations. Sampling and testing procedures shall be performed in accordance with the Reference Standards and as follows:

A. The soils technician shall be present at the site during all backfill and compaction operations. Failure to have the soils technician present will subject such operations to rejection.

B. Density and optimum moisture content of soil shall be determined by the use of the sand cone method, ASTM D 1556, or nuclear density gauge method, ASTM D 2922 & D 3017. Since the composition of the pipe and the walls of the trench have an effect on the nuclear density gauge output, a minimum of 25% of the density and optimum moisture tests shall be made using the sand cone method.

C. Determine laboratory moisture-density relations of existing soil by ASTM D 1557, Method C and/or D.

D. Determine the relative density of cohesion less soils by ASTM D 1557, Method C and/or D.

E. Sample backfill material by ASTM D 75.

F. Express "relative compaction" as a percentage of the ratio of the in-place dry density to the laboratory maximum dry density.

A report of all soils tests performed shall be stamped and signed by the soils firm or individual and shall be submitted by the Contractor prior to the filling of the Notice of Completion by the City. The report shall document the sampling and testing of materials, the location and results of all tests performed, and shall certify that materials and work are in compliance with this specification.

1.5 PIPE ZONE

The pipe zone includes the full-width of the trench from 6-inches below the bottom of the pipe to 12-inches above the top of the pipe and extends into manhole or vault excavations to the point of connection to or penetration of such structure.

1.6 TRENCH ZONE

The trench zone includes the portion of the trench from the top of the pipe zone to the bottom of the pavement zone in paved areas, or to the existing surface in unpaved areas, and extends into manhole or vault excavations above the pipe zone.

1.7 PAVEMENT ZONE

The pavement zone includes the concrete or asphalt concrete pavement and aggregate base section placed over the trench zone and extends into manhole or vault excavations above the trench zone.

1.8 PROTECTION OF EXISTING UTILITIES AND FACILITIES

The Contractor shall be responsible for the care and protection of all existing utilities, facilities, and structures that may be encountered in or near the area of the work.

1.9 PROTECTION OF EXISTING LANDSCAPING

The Contractor shall be responsible for the protection of all the trees, shrubs, fences, and other landscape items adjacent to or within the work area.

1.10 ACCESS

The Contractor shall provide continuous, unobstructed access to all driveways, water valves, hydrants, or other property or facilities within or adjacent to the work areas.

1.11 SAFETY

A. Protection of workers within trenches shall be as required by the California Labor Code.

B. All excavations shall be performed in a safe manner and shall be protected and supported in accordance with CAL-OSHA regulations.

C. Barriers and traffic delineators shall be placed in accordance with the requirements of the agency having jurisdiction.

1.12 BLASTING

Blasting for excavation shall not be performed without the written permission of the City Procedures and methods of blasting shall conform to all Federal, State, and local laws and ordinances.

1.13 PIPE JACKING

Pipe jacking may be permitted in accordance with Section 15125. City approval is required in advance of such operations.

1.14 EXCESS EXCAVATED MATERIAL

A. The Contractor shall remove and legally dispose of all excess excavated material and demolition debris.

B. It is the intent of these specifications that all surplus material shall be legally disposed of by the Contractor. Before acceptance of the work by City, the Contractor shall provide the City with written releases signed by all property owners with whom the Contractor has entered into agreements for disposing of excess excavated material, absolving the City from any liability connected therewith.

1.15 CHANGES IN LINE AND GRADE

In the event obstructions not shown on the plans are encountered during the progress of the work, and which will require alterations to the plans, the Engineer shall have the authority to change the plans and order the necessary deviation from the line and grade. The Contractor shall not deviate from the specified line and grade without prior written approval by the City.

1.16 HYDROSTATIC TESTING

Pre-testing of the piping system may be performed for the Contractor's convenience at any time. However, the final hydrostatic pressure test, as described in Sections 15043 and 15044, shall be performed following the completion of all backfilling and trench zone compaction with a minimum of 2.5-feet of material over the pipe.

PART 2 MATERIALS

2.1 GENERAL

The Contractor shall furnish backfill material as specified below. All materials used in and above the pipe zone shall be capable of attaining the required relative density.

2.2 IMPORTED SAND – PIPE ZONE

Imported sand shall be used within the Pipe Zone for installations of PVC Pressure Pipe, Ductile-Iron Pipe, Cement-Mortar Coated Steel Pipe, Tape-Wrapped Steel Pipe, and Paint-Coated Pipe.

A. Imported sand shall be free from clay balls, organic matter, and other deleterious substances and shall have a coefficient of permeability greater than 0.014 measured in accordance with ASTM D2434 or a sand equivalent of greater than 30 per ASTM D2419.

B. Resistivity for imported sand shall be not less than 2,000 ohm-cm when maximum chloride concentration of 200 mg/l when measured in accordance with California Test Method 422 and a maximum sulfate concentration of 500mg/l when measures in accordance with California Test Method 417.

C. Imported Sand shall conform to the following gradation:

Sieve Size	Percent Passing by Weight
½ inch	100
No. 4	75-100
No. 16	35-75
No. 50	10-40
No. 200	0-10

2.3 CRUSHED ROCK – PIPE ZONE

Crushed Rock shall be used in the Pipe Zone on PVC Gravity Sewer Pipe. Crushed rock shall be clean, crushed stone free of organic matter. Crushed rock shall be certified to contain less than 1% asbestos by weight or volume and shall conform to the following gradation and requirements:

U.S. Standard Sieve Size	Percent Passing by Weight
1-Inch	100
3/4-Inch	90-100
1/2-Inch	30-60
3/8-Inch	0-20
No. 4	0-5
No. 8	---
ASTM C 131 Testing Grade	B

Test	Test Method	Requirement
Percentage Wear	ASTM C 131	---
100 Revolutions	---	15 Maximum
500 Revolutions	---	52 Maximum

2.4 TRENCH PLUGS

Trench plugs consisting of compacted Imported Granular Material or sand cement slurry shall be installed on piping systems that are backfilled with crushed rock.

2. 5 EARTH BACKFILL MATERIAL – TRENCH ZONE

A. Earth backfill is defined as materials removed from the required excavations and used as backfill of earth fill. Earth backfill that meets the requirements specified herein may be used for all backfill or fill, except where imported materials are shown on the Plans or specified herein. Do not use stockpiled topsoil for backfill or fill.

B. Earth backfill shall be excavated materials that is free from organic matter, roots, debris, and rocks larger then 4 inches in the greatest dimension.

C. Earth backfill used in the trench zone shall be native granular materials free from roots, debris, and organic matter with less than 50 percent passing the No. 200 sieve and more than 40 percent passing the No. 4 sieve and rock particles with a maximum dimension no greater than 4 inches.

D. Where the onsite materials are determined by the Engineer to be unsuitable, imported fill shall be provide by the Contractor.

2.6 SAND-CEMENT SLURRY

Sand-cement slurry shall consist of two sacks, 188 pounds, of Portland cement per cubic yard of sand and sufficient moisture for workability. City approval is required for use of slurry as a backfill material.

2.7 FILTER FABRIC

Filter fabric shall be manufactured from polyester, nylon, or polypropylene. Material shall be of non-woven construction and shall meet the following requirements:

Grab tensile strength (ASTM D 4632):	100 lbs. minimum for a 1-inch raveled strip
Weight (ASTM D 3776):	4.5 oz./yd^2)
Apparent opening size (ASTM D 4751):	0.006-inch

PART 3 EXECUTION

3.1 CLEARING AND GRUBBING

A. Areas where work is to be performed shall be cleared of all trees, shrubs, rubbish, and other objectionable material of any kind, which, if left in place, would interfere with the proper performance or completion of the completed work, would impair its subsequent use, or would form obstructions therein.

B. Organic material from clearing and grubbing operations will not be incorporated in the trench backfill and shall be removed from the project site or retained and incorporated into the topsoil.

3.2 PAVEMENT, CURB, AND SIDEWALK REMOVAL

Bituminous or concrete pavements, curbs, and sidewalks shall be removed and replaced in accordance with the requirements of the agency having jurisdiction.

3.3 DEWATERING

A. The Contractor shall provide and maintain at all times during construction ample means and devices to promptly remove and dispose of all water from any source entering excavations or other parts of the work. Dewatering shall be performed by methods that will ensure a dry excavation and preservation of the final lines and grades of the bottoms of excavations. Dewatering methods may include well points, sump points, suitable rock or gravel placed as pipe bedding for drainage and pumping, temporary pipelines, or other means, all subject to the approval of the City. The cost of all dewatering activities shall be borne by the Developer or Contractor.

B. Sewer systems shall not be used as drains for dewatering trenches or excavations, nor for disposal of collected or accumulated groundcover, without the approval of the agency of jurisdiction.

C. Concrete shall not be poured in water, nor shall water be allowed to rise around concrete or mortar until it has set at least four hours.

D. The Contractor is responsible for meeting all Federal, State, and local laws, rules, and regulations regarding the treatment and disposal of water from dewatering operations at the construction site.

3.4 SHORING AND SHIELDING

A. The Contractor's design and installation of shoring shall be consistent with the rules, orders, and regulations of CAL-OSHA.

B. Excavations shall be shored, sheeted, and supported such that the walls of the excavation will not slide or settle and all existing improvements of any kind, either on public or private property, will be fully protected from damage.

C. The sheeting and shoring shall be arranged so as not to place any stress on portions of the completed work until the general construction has proceeded far enough to provide ample strength.

D. Care shall be exercised in the moving or removal of trench shields, sheeting, and shoring to prevent the caving or collapse of the excavation faces being supported.

3.5 CORRECTION OF OVEREXCAVATION

Over-excavations shall be corrected by backfilling with approved imported granular material or crushed rock, compacted to 90% relative compaction, as directed by the City.

3.6 FOUNDATION STABILIZATION

A. When unsuitable soil materials are encountered, the unsuitable material shall be removed to the depth determined necessary in the field by the Soils Technician, and as acceptable to the City. The sub-grade shall be restored with compacted Imported Granular Material or crushed rock as recommended by the Soils Technician. Place the appropriate bedding or base material on this restored foundation.

B. When rock encroachment is encountered, the rock shall be removed to a point below the intended trench or excavation sub-grade as determined necessary in the field by the Soils Technician, and as acceptable to the City. The sub-grade shall be restored with compacted Imported Granular Material as recommended by the Soils Technician. Place the appropriate bedding or base material on this restored foundation.

C. When excessively wet, soft, spongy, or similarly unstable material is encountered at the surface upon which the bedding or base material is to be placed, the unsuitable material shall be removed to the depth determined necessary in the field by the Soils Technician, and as acceptable to the City. Restore the trench with crushed rock enclosed in filter fabric as directed by the Engineer. Larger size rocks, up to 3-inches, with appropriate gradation, may be used if recommended by the Soils Technician. Place the appropriate bedding or base material on this restored foundation.

3.7 TRENCH EXCAVATION AND PLACEMENT OF BEDDING

A. Excavate the trench to the lines and grades shown on the drawings with allowance for 6-inches of pipe bedding material. The trench section shall be as shown on the Standard Drawings.

B. The maximum length of open trench shall be 500-feet except by permission of the City, City, or County. The distance is the collective length at any location, including open excavation and pipe laying, which has not been backfilled to the elevation of the surrounding gate.

C. Trench walls shall be sloped or shored per the requirements of CAL-OSHA.

D. The trench bottom shall be graded to provide a smooth, firm, and stable foundation that is free from rocks and other obstructions.

E. Place the specified thickness of bedding material over the full width of the trench. Grade the top of the pipe base ahead of the pipe laying to provide a firm, uniform support along the full length of pipe.

F. Excavate bell holes at each joint to permit proper assembly and inspection of the entire joint.

G. Trenches for main pipelines and all appurtenances shall be backfilled with the materials and methods as specified for the Pipe Zone, Trench Zone, and Pavement Zone.

H. Trench widths shall be in accordance with the Standard Drawings.

I. Trench depth shall be as required to install pipelines in accordance with the Approved Plans and these Standard Specifications. Unless shown otherwise in the Approved Plans, the minimum cover for pipelines shall be as follows:

Pipeline Application	Minimum Cover Required
Potable Water	36-inches
Recycled Water	48-inches
Sewer	60-inches

3.8 MANHOLE AND VAULTS

A. The Contractor shall prepare an excavation large enough to accommodate the structure and permit grouting of openings and backfilling operations. The walls of the excavation shall be sloped or shored per the requirements of CAL-OSHA.

B. Manholes and vaults shall be placed at the location and elevation shown on the plans, on undisturbed soil with 6-inches of compacted crushed rock base.

C. Manhole and vault excavations shall be backfilled with the materials and methods as specified for the Pipe Zone, Trench Zone, and Pavement Zone.

3.9 COMPACTION REQUIREMENTS

A. Compaction shall be accomplished by mechanical means. Consolidation by water settling methods such as jetting or flooding is prohibited.

B. If the backfill fails to meet the specified relative compaction requirements, the backfill shall be reworked until the requirements are met. All necessary excavations for density tests shall be made as directed by the Soils Technician, and as acceptable to the Engineer. The requirements of the Agency having jurisdiction shall prevail on all public roads.

C. Compaction tests shall be performed at random depths, and at random intervals not to exceed 150-feet, as directed by the Soils Technician or City.

D. Relative compaction shall be determined by the impact or field compaction test made in accordance with ASTM D 1557 Procedure C.

E. Unless otherwise shown on the plans, standard drawings or otherwise described in the specifications for the particular type of pipe installed, relative compaction in pipe trenches shall be as follows:

1. Pipe zone – 90% relative compaction.

2. Trench zone – 90% relative compaction.

3. Structural section in paved areas – per agency requirements, 95% minimum.

4. Imported Granular Material for over excavation or foundation stabilization – 90% relative density.

F. All excavations are subject to compaction tests.

3.10 TRENCH PLUGS

Trench plugs shall be installed at 200-foot intervals along the entire length of piping systems. Trench plugs shall be 10-feet in length and shall encompass the entire pipe zone. Additional trench plugs may be required as directed by the Engineer.

3.11 PIPE ZONE BACKFILL

A. Care shall be taken in placing the imported granular backfill material simultaneously around the main pipeline and appurtenance pipes so that the pipe barrel is completely supported and that no voids or uncompacted areas are left beneath the pipe or on the sides of the pipe. Care shall be taken to place material simultaneously on both sides of the pipe to prevent lateral movement. This area shall be mechanically compacted to attain 90% relative density. Care shall be taken when compacting appurtenance laterals 2-inches and smaller to prevent the crushing or denting of the copper lateral. Additional lifts of 12-inches or less thickness may be required on 16-inch or larger diameter pipe to attain complete support of the haunch area. Soils tests may be taken on this layer or backfill.

B. After the spring line backfill has been approved by the Soils Technician, backfill of the remainder of the Pipe Zone may proceed. Do not drop sharp, heavy pieces of material directly onto the pipe or the tamped material around the pipe.

C. Place and compact the imported granular material at a maximum of 12-inch lifts. Compact all material placed in the Pipe Zone by mechanical methods. Sand cone tests shall be taken on this layer of backfill.

D. The use of a backhoe mounted compaction wheel is prohibited within the pipe zone to 12-inches above the top of the pipe.

E. Under no circumstances shall consolidation by water settling or water-setting methods (i.e., jetting, diking, etc.) be permitted.

3.12 TRENCH ZONE BACKFILL

A. After the Pipe Zone material has been placed, compacted, approved by the Soil Technician, and accepted by the City, backfill in the Trench Zone may proceed.

B. Compaction using vibratory equipment, tamping rollers, pneumatic tire rollers, or other mechanical tampers shall be performed with the type and size of equipment necessary to accomplish the work. The backfill shall be placed in horizontal layers of such depths as are considered proper for the type of compacting equipment being used in relation to the backfill material being placed. Each layer shall be evenly spread, properly moistened, and compacted to the specified relative density. The Contractor shall repair or replace any pipe, fitting, manhole, or structure damaged by the installation operations as directed by the City.

3.13 PAVEMENT ZONE BACKFILL AND RESTORATION

A. After the Trench Zone material has been placed, compacted, approved by the Soil Technician, and accepted by the City, backfill in the Pavement Zone may proceed as necessary in accordance with the requirements of the agency having jurisdiction.

B. Replace bituminous and concrete pavement, curbs, and sidewalks removed or damaged during construction in accordance with the requirements of the agency having jurisdiction.

END OF SECTION

SECTION 03000 CAST-IN-PLACE CONCRETE

PART 1 GENERAL

1.1 DESCRIPTION

This section describes materials and methods for formwork, reinforcement, mixing, placement, curing and repairs of concrete, and the use of cementitious materials and other related products. This section includes concrete, mortar, grout, reinforcement, thrust and anchor blocks, valve support blocks, and manhole bases.

1.2 REFERENCE STANDARDS

The publications listed below form part of this specification to the extent referenced and are referred to in the text by the basic designation only. Reference shall be made to the latest edition of said standards unless otherwise called for.

ASTM A 185	-	Specification for Steel Welded Wire Fabric, Plain, for Concrete Reinforcement
ASTM A 615/A 615M	-	Specification for Deformed and Plain Billet-Steel Bars for Concrete Reinforcement
ASTM C 150	-	Specification for Portland Cement
ASTM C 494	-	Specification for Chemical Admixtures for Concrete
ASTM C 881	-	Specification for Epoxy-Resin-Base Bonding Systems for Concrete
CRSI	-	Recommended Practice for Placing Reinforcing Bars
SSPWC	-	Standard Specifications for Public Works Construction "Greenbook"

1.3 RELATED WORK SPECIFIED ELSEWHERE

Standard Specifications 02223,15000, 15041, 15044, 15056, 15061, 15064, 15074, 15102, 15108, 15112, AND 16640

1.4 APPLICATIONS

The following materials, referenced in other sections, shall be provided and installed in accordance with this specification for the applications noted below:

A. Concrete for thrust and anchor blocks for horizontal and vertical bends, ductile-iron or steel fittings, fire hydrant bury ells, and support blocks for valves 4-inches and larger, all in accordance with the Standard Drawings.

B. Concrete for collars, cradles, curbs, encasements, gutters, manhole bases, protection posts, sidewalks, splash pads, and other miscellaneous cast-in-place items.

C. Mortar for filling and finishing the joints between manhole and vault sections and setting manhole grade rings and cover frames. Mortar may also be used for repairs of minor surface defects of no more than ¼-inch in depth of ½-inch in width on non-structural, cast-in-place items such as splash pads or concrete rings around manholes. (Note that large voids, structural concrete and pipe penetrations into vaults shall be repaired with non-shrink grout; repairs to precast manholes and vaults and cast-in-place manhole bases shall be repaired with an epoxy bonding agent and repair mortar, as outlined below).

D. Epoxy bonding agent for bonding repair mortar to concrete on repairs to damaged surfaces to precast or cast-in-place concrete manoles and vaults.

E. Repair mortar for repair to damaged surfaces of precast or cast-in-place concrete manholes and vaults. An epoxy bonding agent shall be used in conjunction with repair mortar.

F. Non-shrink grout for general purposes repair of large construction voids, pipe penetrations into vaults and grouting of base plates for equipment or structural members.

G. Epoxy adhesives for grouting of anchor bolts.

H. Protective epoxy coating for application to reinforcing steel with existing concrete structures exposed during construction.

I. Damp-proofing for application to the exterior surfaces of concrete manholes and vaults located at or below the water table or where showing evidence of moisture or seepage, and as directed by the Engineer.

1.5 DELIVERY, STORAGE, AND HANDLING

Deliver reinforcing steel to the site bundled and tagged with identification. Store on skids to keep bars clean and free of mud and debris. If contaminated, all bars shall be cleaned by wire brushing, sand blasting, or other means prior to being set in forms.

PART 2 MATERIALS

2.1 CONCRETE

A. All Portland cement concrete shall conform to the provisions of Sections 201, 202, and 303 of the Standard Specifications for Public Works Construction (Greenbook).

B. Class 560-C-3250 concrete, as described in the Greenbook, Section 201, shall be used for all applications unless otherwise directed by the City. The maximum water/cement ratio shall be 0.53 by weight, and the maximum slump shall be 4-inches.

C. In certain circumstances, rapid-setting concrete may be required. Accelerating admixtures shall conform to ASTM C-494 and may be used in the concrete mix as permitted by the City. Calcium chloride shall not be used in concrete.

2.2 REINFORCING STEEL

A. Reinforcing steel shall conform to ASTM A 615, Grade 60.

B. Fabricate reinforcing steel in accordance with the current edition of the Manual of Standard Practice, published by the Concrete Reinforcing Steel Institute.

2.3 WELDED FIRE FABRIC

Welded wire fabric shall conform to ASTM A 185.

2.4 TIE WIRE

Tie wire shall be 16-gage minimum, black, soft annealed.

2.5 BAR SUPPORTS

Bar supports in beams and slabs exposed to view after removal of forms shall be galvanized or plastic coated. Use concrete supports for reinforcing in concrete placed on grade.

2.6 FORMS

A. Forms shall be accurately constructed of clean lumber. The surface of forms against which concrete is placed shall be smooth and free from irregularities, dents, sags or holes.

B. Metal form systems may be used upon City approval. Include manufacturer's data for materials and installation with the request to use a metal form system.

2.7 MORTAR

Cement mortar shall consist of a mixture of Portland cement, sand, and water. One part cement and two parts sand shall first be combined, and then thoroughly mixed with the required amount of water.

2.8 EPOXY BONDING AGENT

The epoxy bonding agent shall be an epoxy-resin-based product intended for bonding new mortar to hardened concrete and shall conform to ASTM C 881. The bonding agent shall be selected from the Approved Materials List.

2.9 REPAIR MORTAR

Repair mortar shall be a two-component, cement-based product specifically designed for structurally repairing damaged concrete surfaces. The repair mortar shall exhibit the properties of high compressive and bond strengths and low shrinkage. A medium-slump repair mortar shall be used on horizontal surfaces, and a non-sag, low-slump repair mortar shall be used on vertical or overhead surfaces. Repair mortar shall be selected from the Approved Materials List.

2.10 NON-SHRINK GROUT

Non-shrink grout shall be a non-metallic cement-based product intended for filling general construction voids or grouting base plates for equipment or structural members. The non-shrink grout shall exhibit the properties of high compressive and bond strengths and zero shrinkage, and shall be capable of mixing to a variable viscosity ranging from a dry pack to a fluid consistency as required for the application. The non-shrink grout shall be selected from the Approved Materials List.

2.11 EPOXY ADHESIVE

Epoxy adhesive shall be a high-modulus epoxy-resin-based product intended for structural grouting of anchor bolts and dowels to concrete. The epoxy adhesives shall conform to ASTM C 881. A pourable, medium-viscosity epoxy shall be used on horizontal surfaces, and a heavy-bodied, non-sag epoxy gel shall be used on vertical surfaces. The epoxy adhesives shall be selected from the Approved Materials List.

2.12 PROTECTIVE EPOXY COATING

The protective epoxy coating shall be an epoxy-resin-based product exhibiting high bond strength to steel and concrete surfaces, and shall conform to ASTM C 881. The protective epoxy coating shall be selected from the Approved Materials List.

2.13 DAMP-PROOFING FOR CONCRETE STRUCTURES

Damp-proofing material shall consist of two coats of a single-component self-priming, heavy-duty cold-applied coal tar selected from the Approved Materials List.

PART 3 EXECUTION

3.1 FORMWORK

A. The Contractor shall notify the City a minimum of one working day in advance of intended placement of concrete to enable the City to check the form lines, grades, and other required items before placement of concrete.

B. The form surfaces shall be cleaned and coated with form oil prior to installation. The form surfaces shall leave uniform form marks conforming to the general lines of the structure.

C. The forms shall be braced to provide sufficient strength and rigidity to hold the concrete and to withstand the necessary fluid pressure and consolidation pressures without deflection from the prescribed lines.

D. Unless otherwise indicated on the plans, all exposed sharp concrete edges shall be 3/4-inch chamfered.

3.2 REINFORCEMENT

A. Place reinforcing steel in accordance with the current edition of Recommended Practice for Placing Reinforcing Bars, published by the Concrete Reinforcing Steel Institute.

B. All reinforcing steel shall be of the required sizes and shapes and placed where shown on the drawings or as directed by the City.

C. Do not straighten or re-bend reinforcing steel in a manner that will damage the material. Do not use bars with bends not shown on the drawings. All steel shall be cold bent – do not use heat.

D. All bars shall be free from rust, scale, oil, or any other coating that would reduce or destroy the bond between concrete and steel.

E. Position reinforcing steel in accordance with the Approved Plans and secure by using annealed wire ties or clips at intersections and support by concrete or metal supports, spacers, or metal hangers. Do not place metal clips or supports in contact with the forms. Bend tie wires away from the forms in order to provide the concrete coverage equal to that required of the bars. If required by the Engineer, the Contractor shall install bars additional to those shown on the drawings for the purpose of securing reinforcement in position.

F. Place reinforcement a minimum of 2-inches clear of any metal pipe, fittings, or exposed surfaces.

G. The reinforcement shall be so secured in position that it will not be displaced during the placement of concrete.

H. All reinforcing steel, wire mesh, and tie wire shall be completely encased in concrete.

I. Reinforcing steel shall not be welded unless specifically required by the Approved Plans or otherwise directed by the Engineer.

I. Secure reinforcing dowels in place prior to placing concrete. Do not press dowels into the concrete after the concrete has been placed.

J. Minimum lap for all reinforcement shall be 40 bar diameters unless otherwise specified on the Approved Plans.

K. Place additional reinforcement around pipe penetrations or openings 6-inches diameter or larger. Replace cut bars with a minimum of 1/2 of the number of cut bars at each side of the opening, each face, each way, same size. Lap with the uncut bars a minimum of 40 bar diameters past the opening dimension. Place one same size diagonal bar at the four diagonals of the opening at 45° to the cut bars, each face. Extend each diagonal bar a minimum of 40 bar diameters past the opening dimension.

L. Wire mesh reinforcement is to be rolled flat before being placed in the form. Support and tie wire mesh to prevent movement during concrete placement.

M. Extend welded wire fabric to within 2-inches of the edges of slabs. Lap splices at least 1-1/2 courses of the fabric and a minimum of 6-inches. Tie laps and splices securely at ends and at lest every 24-inches with 16-gage black annealed steel wire. Pull the fabric into position as the concrete is placed by means of hooks, and work concrete under the steel to ensure that it is at the proper distance above the bottom of the slab.

3.3 EMBEDDED ITEMS

All embedded items, including bolts, dowels and anchors, shall be held correctly in place in the forms before concrete is placed.

3.4 MORTAR MIXING

The quantity of water to be used in the preparation of mortar shall be only that required to produce a mixture sufficiently workable for the purpose intended. Mortar shall be used as soon as possible after mixing and shall show no visible sign of setting prior to use. Re-mixing of mortar by the addition of water after signs of setting are evident shall not be permitted.

3.5 MIXING AND PLACING CONCRETE

A. All concrete shall be placed in forms before taking its initial set.

B. No concrete shall be placed in water except with permission of the City.

C. As the concrete is placed in forms, or in rough excavations (i.e., thrust or anchor blocks), it shall be thoroughly settled and compacted throughout the entire layer by internal vibration and tamping bars.

D. All existing concrete surfaces upon which or against which new concrete is to be placed shall be roughened, thoroughly cleaned, wetted, and grouted before the new concrete is deposited.

3.6 CONCRETE FINISHING

A. Immediately upon the removal of forms, voids shall be neatly filled with cement mortar, non-shrink grout, or epoxy bonding agent and repair mortar as required for the application and as directed by the City.

B. The surfaces of concrete exposed to view shall be smooth and free from projections or depressions.

C. Exposed surfaces of concrete not poured against forms, such as horizontal or sloping surfaces, shall be screeded to a uniform surface, steel-trowelled to densify the surface, and finished to a light broom finish.

3.7 PROTECTION AND CURING OF CONCRETE

The Contractor shall protect all concrete against damage. Exposed surfaces of new concrete shall be protected from the direct rays of the sun by covering them with plastic film wrap and by keeping them damp for at least 7 days after the concrete has been placed, or by using an approved curing process. Exposed surfaces shall be protected from frost by covering with tarps for at least 5 days after pouring.

3.8 REPAIRS TO DAMAGED CONCRETE SURFACES

Minor surface damage to hardened cast-in-place or precast concrete may be repaired, at the discretion of the City, using the specified materials in accordance with the manufacturer's recommendations and the following procedures:

A. Cast-in-place or precast concrete for manholes and vaults: Remove loose or deteriorated concrete to expose a fractured aggregate surface with an edge cut to a ninety degree angle to the existing surface. Clean all debris from the area, apply a 20 mil coat of epoxy bonding agent to the prepared surface, and place repair mortar while the epoxy is still wet and tacky. On horizontal surfaces, for repair depths greater than 2-inches, add aggregate to the repair mortar as recommended by the manufacturer. On vertical or overhead surfaces, for repair depths greater than 2-inches, apply the repair mortar in successive lifts, scarifying the lifts, allowing them to harden, and applying a scrub coat of the material prior to proceeding with the next lift. Cure the material as for concrete in accordance with this specification.

B. General Purpose: Remove loose and deteriorated concrete by mechanical means, sandblasting, or high-pressure water blasting. Clean all debris from the area and apply non-shrink grout in a 1/4-inch minimum thickness, at the desired consistency, ranging from a dry pack, to a fluid-poured into a formed area, according to the application. Cure the material as for concrete in accordance with this specification.

3.9 EPOXY ADHESIVES FOR ANCHOR BOLT INSTALLATION

Anchor bolts grouted in place with an epoxy adhesive shall be installed using the specified materials in accordance with the manufacturer's recommendations and the following general procedures: Drill the hole with a rotary percussion drill to produce a rough, unpolished hole surface. the hole shall be sized to the manufacturer's recommendations and should be approximately 1/4-inch wider than the diameter of the bolt, with a depth equal to 10 to 15 times the bolt diameter. Remove debris and dust with a stiff bristle brush and clean using compressed air. Utilizing a medium-viscosity epoxy for horizontal surfaces, and a gel-type non-sag epoxy for vertical surfaces, apply the material to fill the hole to approximately half its depth. Insert the bolt, forcing it down until the required embedment depth and projection length are attained and then twist the bolt to establish a bond. Secure the bolt firmly in place in the permanent position until the epoxy sets.

3.10 PROTECTIVE EPOXY COATING

Following core drilling at existing concrete structures, clean the exposed concrete surface and ends of reinforcing steel and apply two coats of protective epoxy coating for a total dry film thickness of 10-15 mils. Allow the material to cure between coats and prior to continuing the installation through the penetration.

3.11 DAMP-PROOFING FOR THE EXTERIOR OF CONCRETE STRUCTURES

Following completion of the exterior surfaces of manholes and vaults, including necessary repairs and piping penetrations into the structure, apply the specified material to prepared concrete surfaces in accordance with the manufacturer's recommendations. The surfaces to be coated shall be fully-cured and free of laitance and contamination. The material shall be applied to all exterior surfaces below a point 12-inches above the water table or indications of seepage or moisture as directed by the Engineer. Apply two 15 mil coats, curing between coats, prior to backfill and/or immersion in accordance with the manufacturer's recommendations.

3.12 THRUST AND ANCHOR BLOCKS

Concrete thrust and anchor blocks shall be poured against wetted, undisturbed soil in accordance with the Standard Drawings and as directed by the City. The concrete shall be placed so that fittings and valves will be accessible for repairs or replacement. Prior to filling the pipeline with water, the concrete for thrust and anchor blocks shall cure for the following number of days:

Thrust Blocks	3 days minimum
Anchor Blocks	7 days minimum

A. Safe Soil Bearing Load:

Soil	Safe Bearing Load
Muck, peat, etc.***	0 PSF
Soft Clay	500 PSF
Fine Sand	1,000 PSF
Decomposed Granite (D.G.)	1,500 PSF
Sandy Gravel	2,000 PSF
Cemented Sandy Gravel	2,000 PSF
Hard Shale	2,500 PSF
Granite	10,000 PSF

***In muck or peat soils, competent resistance shall be achieved by removal and replacement with ballast or sufficient stability to resist the intended thrusts. Consult the project geotechnical consultant.

B. Thrust Block Placement and Sizing:

Thrust blocks shall be located at all unrestrained pipe fittings and bear against firm, undisturbed soil. The thrust blocks shall be centered on the fitting so that the bearing area is exactly opposite the resultant direction of the thrust, refer to the Standard Drawings. Care shall be taken to prevent the placed thrust block concrete from eliminating maintenance access to the valve operators. All thrust block excavation location, shape, and the City prior to pouring the concrete shall verify size. The size, in sq. ft., of the thrust block can be calculated by dividing the thrust by the safe bearing load.

For instance, use a 12-inch pipe, 45° end, at 200 psi test pressure with a D.G. trench the value of 11,720# of thrust can be obtained from the upper chart and 1,500#/sq. ft. safe bearing load from the lower chart as follows:

11,720# x 2 / 1,500#/Sq. ft. = 15.6 sq. ft. or 16 sq.

Therefore, for this example, the trench wall adjacent to the fitting shall be excavated to the dimensions of 4 ft. x 4 ft. or 3.5 ft. x 5 ft. or some closely approximate multipliers to achieve the minimum required 16 sq. ft. bearing area.

C. Anchor Block Placement and Sizing:

For all vertical bends in pipelines (downward bends) that do not have restrained joints, the fittings shall be retained in place by means of an anchor block. The block shall be sized to withstand the thrust exerted for the particular deflection angle at the required test pressure plus 10%. (Do not rely on the restraining benefit from the soil). The City shall verify the size chosen and the reinforcing steel required.

The size, in cu. ft. of the anchor block can be calculated by dividing the thrust by the unit weight of concrete (i.e., one cu. ft. or concrete weighs approximately 145#). For instance, use the same 12-inch pipe, 45° bend, at 200 psi test pressure – the value of 11,720# of thrust can be obtained from the upper chart:

11,720# x 2 / 145# = 162 cu. ft. (plus 10%) = 178 cu. ft. or 6.6 cu. yd.

Therefore, for this example, the anchor block shall be 5.5' x 5.5' x 6' or 6' x 6' x 5', or some closely approximate multipliers to achieve a minimum of 178 cu. ft. of concrete.

3.13 VALVE SUPPORT BLOCKS

Valve support blocks shall be installed as described below and in accordance with the Standard Drawings:

A. Support blocks below valves shall be cut into the side of the trench a minimum of 12-inches.

B. Support blocks shall extend up to a height of adjoining pipe and shall have a minimum depth below the valve of 12-inches.

C. Support blocks shall be installed so that the valves will be accessible for repairs.

END OF SECTION

SECTION 03460 PRECAST CONCRETE SEWER MANHOLES

PART 1 GENERAL

1.1 DESCRIPTION

A. The CONTRACTOR shall provide precast concrete sewer manholes, also referred to as access holes, complete and in place, in accordance with the Contract Documents.

1.2 REFERENCE STANDARDS

A. Commercial Standards:

ASTM A 48	Gray Iron Castings
ASTM C 478	Precast Reinforced Concrete Manhole Sections
ASTM C 923	Resilient Connectors between Reinforced Concrete Manhole Structures, Pipes, and Laterals

1.3 RELATED WORK ELSEWHERE

The CONTRACTOR shall refer to the following specification section(s) for additional requirements:

A. Trenching, Excavation, Backfilling and Compacting: 02223

B. Cast-In-Place Concrete: 03000

C. Polyvinyl Chloride (PVC) Gravity Sewer Pipe: 15063

1.4 CONTRACTOR SUBMITTALS

A. **General:** Furnish submittals in accordance with GENERAL PROVISIONS.

B. **Shop Drawings:**

1. Show dimensions, locations, lifting inserts, reinforcement, and joints.

2. Structural design calculations.

1.5 QUALITY ASSURANCE

A. **Inspection:** After installation, the CONTRACTOR shall demonstrate that manholes have been properly installed, level, with tight joints, at the correct elevations and orientations, and that the backfilling has been carried out in accordance with the Contract Documents.

PART 2 MATERIALS

2.1 MANHOLES

A. The CONTRACTOR shall provide precast manhole sections and conical sections conforming to ASTM C 478 and the requirements of this Section. Adjusting rings shall be standard items from the manufacturer of the manhole sections. Minimum wall thickness of rings shall be 1/8 of the internal diameter of the riser or largest cone diameter.

B. Axial length of sections shall be selected to provide the correct total height with the fewest joints.

C. Conical sections shall be designed to support cast iron frames and covers under an H-20 loading, unless indicated otherwise.

D. Sewer manhole sections shall be cast without ladder rungs.

E. **Design Criteria:** Manhole walls, transitions, conical sections, and base shall be designed per ASTM C 478 for the depths indicated and the following:

1. AASHTO H-20 loading applied to the cover.

2. Unit weight of soil of 120 pcf located above all portions of the manhole.

3. Lateral soil pressure based on saturated soil producing 100 pcf acting on an empty manhole.

4. Internal fluid pressure based on weight of 63 pcf with manhole filled from invert to cover with no balancing external soil pressure.

5. Dead load of manhole sections fully supported by the base and transition.

6. The minimum allowable steel shall be hoops of No. 4 wire. Add reinforcing steel in walls to transfer stresses at openings.

7. The minimum clear distance between the edges of any 2 wall penetrations shall be 12-inches or one-half of the diameter of the smaller penetration, whichever is greater.

8. All manholes on sewer pipelines 15-inches in diameter or larger, all drop manholes, regardless of size and all forcemain terminal manholes shall be T-lock PVC lined including the bench.

9. All manholes with incoming pipe slopes of 7% or greater shall be “T-lock” PVC lined.

10. Where there is a slope change from steep to flat of 5% or greater, the manhole at the grade change and the next manhole upstream shall be PVC lined.

F. Joint sealing compound shall be a mastic-type material in a flexible rope or rolled form with removable wrapper sized to fit into the key manhole sections.

G. Concrete for base and channel formation shall be concrete conforming to Section 03000 – Cast-In-Place Concrete.

H. Barrel section to sewer pipe connections shall be sealed with resilient connectors complying with ASTM C 923. Mechanical devices shall be stainless steel.

I. Drop manholes, if approved by the City Engineer, shall conform to the applicable provisions for precast manholes as specified herein.

J. Manhole Manufacturers, or Equal

1. B&W Precast
2. Mar-Con Products
3. Ameron

2.2 MANHOLE FRAMES AND COVERS

A. Manhole frames shall be 36” in diameter with two concentric covers, made of cast-iron in accordance with ASTM A 48 Class 30 and the Standard Drawings. Covers shall incorporate a “pic-hole” for lifting purposes.

1. Locking frames and covers may be required in areas located outside the public right of way, in remote areas or when determined by the City Engineer.

B. Frames and covers shall be designed for H-20 highway wheel loading.

C. Covers shall be cast with the words “CITY OF CARLSBAD” and “SEWER”. No other lettering will be permitted on the top portion of the cover.

D. Casting shall be smooth, clean, and free from blisters, blowholes, and shrinkage. Mating surfaces of the frame and cover shall be machined to prevent movement of the lid. Frames and covers shall be match marked in sets before shipping to the site.

E. All castings shall be dipped twice in a preparation of asphalt or coal tar and oil applied at a temperature of not less than 290 degrees F nor more than 310 degrees F and in such a manner as to form a firm and tenacious coating.

F. Castings Manufacturers, or Equal

1. Alhambra Foundry
2. South Bay Foundry

2.3 PVC LINER

A. Where a PVC lined manhole is shown, specified or required, the entire interior of the manhole shall be covered with white PVC liner as shown on Carlsbad Standard Drawing (CSD) S-1A.

B. Precast shaft sections, cone sections, and grade rings shall utilize PVC liner sheet with integrally cast PVC T-shaped extensions.

C. The channel of the cast-in-place base shall be formed and shall utilize PVC liner sheet with integrally cast PVC T-shaped extensions. The bottom 90-degrees of the channel shall remain unlined as shown on CSD S-1A.

D. T-shaped PVC liner sheets shall be a minimum of 0.065-inch in thickness. Locking extensions (T-shaped) of the same materials as that of the liner shall be integrally extruded with the sheet. The locking extensions shall be approximately 2.5-inches apart and shall be at least 0.375-inches high.

E. T-shaped liner sheets shall be placed with the "T"s run vertical.

F. The shelf of the manhole base shall be covered with PVC liner using one of the following two methods:

1. Place PVC T-shaped liner sheets where the base is cast-in-place.

2. Place a PVC liner sheet after the base has cured utilizing the Arrow-Lock Lining system in accordance with the manufacturer's recommendations (Ameron protection Linings Division).

G. PVC Liner Manufacturers, or Equal

1. Amer-Plate T-Lock Liner, Ameron Protective Linings Division

PART 3 EXECUTION

3.1 GENERAL

A. Pre-cast concrete sections shall be transported and handled with care in accordance with the manufacturer’s written recommendations. Where lifting devices are provided in pre-cast sections, such lifting devices shall be used as intended. Where no lifting devices are provided, the CONTRACTOR shall follow the manufacturer’s recommendations for lifting procedures to provide proper support during lifting.

B. The manhole base shall be poured in place against a minimum of 6-inches of 3/4” crushed rock base situated on undisturbed soil. The manhole stubs and sewer main shall be set before the concrete is placed and shall be rechecked for alignment and grade before the concrete has set. The various sized inlets and outlets to the manhole shall be located as indicated on the Approved Plans. The manhole base shall extend 9-inches below the bottom of the lowest pipe. Invert elevations of connecting sewers may vary depending upon sizes. When intercepting flows from smaller pipelines in manholes, set invert of the smaller mains at ¾ of the depth of the larger main.

The invert of the manhole base shall be hard worked so as to provide channels conforming in size and shape to the lower portions of the inlets and outlets. The channel shall vary uniformly in size and shape from inlet to outlet and be constructed higher than pipe as indicated on the Approved Plans. The manhole invert channels shall be smooth and accurately shaped. Channels may be formed directly in the concrete base. All transitions shall be smooth and of the proper radius to give an uninterrupted transition of flow. The concrete base shall be shaped with a wood float and shall receive a hard-steel trowel finish prior to the concrete setting.

In the event additional mortar is required after initial set has taken place, the surface to receive the mortar shall be primed and the mortar mixed with “Willhold Concrete Adhesive” in the amounts and proportions recommended. The bases shall set a minimum of 24 hours before the manhole construction is continued.

C. Straight through channels in manholes with no tributaries may have SDR 35 PVC pipe installed though the manhole. The top section of pipe shall be removed flush with top of shelf. All cuts shall be neat and dressed minimizing burrs and rough edges.

D. Each manhole section shall be sealed with butyl rubber sealant rope (See Detail on Std Dwg S-1A) to make a watertight joint, shall be neatly banded on the inside and outside and shall be set plumb. All manholes shall be vacuum tested in accordance with the procedures specified herein in paragraph 3.3 and shown on Carlsbad Standard Drawing S-1A.

Sections of various height grade rings shall be used in order to bring the top of the manhole ring and cover to the elevation on the Approved Plans, but limited to a maximum of 18 inches of grade ring. The precast concrete manhole rings shall be jointed with a minimum thickness of ½ inch of Portland cement mortar along with butyl rubber sealant rope. Mortar shall be composed of one part Portland cement to two parts clean well-graded sand of such size that all pass a No. 8 sieve. Preformed, cold applied ready-to-use plastic joint sealing compound may be substituted for mortar between units and shall be used when ground water is encountered.

The finished elevations at which the manhole frames and covers are to be set shall conform to the requirements set forth in the Approved Plans. Where the frame and cover are in existing pavement or in the traveled way of the existing road shoulder, it is to be placed flush with the existing surface. When the structure is outside the limits of the traveled shoulder but not in the roadside ditch, it should be placed 1/10-foot above the existing ground surface.

Where the manhole cover falls in the existing roadside ditch or easement right-of-way “offsite”, it is to be placed approximately 6-inches above the existing ground surface. Manhole frames shall be set at the required grade and shall be securely attached to the top precast manhole shaft unit with a cement-mortar bed and fillet. After the frames are securely set in place, covers shall be installed and all necessary cleaning and scraping of foreign materials from the frames and covers shall be accomplished to ensure a satisfactory fit.

E. Damp-proof material shall be applied, when ground water is present or anticipated and at the discretion of the City Engineer, to the exterior surfaces of man-holes in accordance with the manufactures recommendations. The material shall be applied to all exterior surfaces below a point one foot above the water table or indications of seepage or moisture as directed by the Engineer. Use water-proofing material for exterior surface when below ground water, per Std Dwg S-1A or as required by Engineer.

F. Selected clean backfill material shall be used around all man-holes. It shall be compacted by pneumatic tampers as shown on Standard Drawing No. S-5, unless shown otherwise on the approved plans.

G. A concrete ring shall be cast around manhole frames to within 3” of finished grade and capped with asphalt, as shown on the Approved Plans. The ring shall be placed after the final grading or paving together with the final cleanup.

3.2 WATER-TIGHTNESS OF MANHOLES

A. It is the intent that all man-holes and appurtenances be water tight and free from infiltration. All man-hole joints shall use butyl rubber sealant material to provide a water tight seal and shall comply with the vacuum test requirements specified herein in paragraph 3.3 of this Section. Where manholes are to be given a protective lining or coating, they shall be free of any seeping or surface moisture. Sections of manholes below ground water levels or anticipated ground water levels shall have sealant material installed on the external surface per Std Dwg S-1A.

3.3 VACUUM TESTING OF MANHOLES

A. All sewer manholes shall be vacuum tested in accordance with the requirements specified herein.

B. Vacuum testing equipment shall be as manufactured by P.A. Glazier, Inc. or approved equal.

C. Manholes shall be tested after assembly and prior to mortaring the joints or backfilling. In case of manholes incorporating a PVC liner, the testing is to take place prior to mortaring the joints, welding the liner seams between sections, and backfilling.

D. All lift holes shall be plugged with an approved grout prior to testing. All pipes entering the manhole shall be plugged and bracing installed to prevent the plug from being drawn into the manhole. The test head shall be placed inside the top of the cone section and the seal inflated in accordance with the manufacture's recommendations. A vacuum of 10 inches of mercury shall be drawn. The time shall be measured for the vacuum to drop 9-inches. The manhole shall pass the test if the time taken for the drop is greater than 60 seconds. If the manhole fails the test, necessary repairs shall be made and the test repeated until acceptable results are obtained. The leak(s) shall be located and repaired, according to the type of leak, with material-in-kind.

3.4 PULL-TESTING OF PVC-LINED MANHOLES

At the Engineers request, PVC-lined manholes shall have field-welded joints pull tested. Field welds shall withstand a pull test of at least 100 pounds per linear inch applied perpendicularly to the concrete surface for a period of one-minute without evidence of cracks or separation. This test shall be conducted at a temperature of 70°F to 80°F, inclusive.

3.5 HOLIDAY TESTING OF PVC-LINED MANHOLES

PVC-lined surfaces shall be holiday tested with an electrical holiday detector as manufactured by Tinker and Rasor (model No. AP-W with power pack) with the instrument set at 20,000 volts and used as directed by the Engineer. All imperfections identified on the PVC lining shall be repaired and the test shall be repeated until no holidays are evident.

3.6 MANHOLE ABANDONMENT

Sewer manholes shall have the cover and frame, concrete ring, grade rings and cone section removed. Inlet and outlet piping shall be plugged with concrete, manhole void shall be filled with sand, and a 12” thick, reinforced concrete slab shall be poured over the top of remaining manhole. The Contractor shall backfill the hole to ground surface with compacted select fill.

END OF SECTION

SECTION 09870 TAPE COATING SYSTEM WITH MORTAR SHIELD FOR THE EXTERIOR OF STEEL WATER PIPELINES

PART 1 GENERAL

1.1 DESCRIPTION

A. The steel pipe shall be coated with polyethylene tapes in accordance with AWWA C214. Fittings and specials shall be coated with cold-applied polyethylene tapes in accordance with AWWA C209. A reinforced cement mortar shield shall be applied in accordance with AWWA C205. Any modifications to the aforementioned standards are as stated herein.

1.2 RELATED WORK ELSEWHERE

The Contractor shall refer to the following specification section(s) for additional requirements:

A. Painting and Coating: 09900
B. Petrolatum Wax Tape Coating: 09902
C. Cement Mortar Lined Steel Pipe: 15061

1.3 QUALIFICATIONS OF MANUFACTURERS

A. Manufacturer to demonstrate a minimum of five years' successful application of tape coating system on similar diameter steel water pipelines as specified herein.

1.4 SUBMITTALS

A. List of tape coating materials indicating manufacturer, product numbers, and thickness of materials related to tape system for joints and repairs.

B. Certification of test results for each batch of liquid adhesive and each tape material specified shall be in accordance with AWWA C214.

C. Tape application procedure approved by tape manufacturer.

1.5 COORDINATION WITH TAPE MANUFACTURER

A. The pipe manufacturer shall require the tape material manufacturer to furnish qualified factory technical representative to visit the site for technical support at the beginning of the pipe installation as may be necessary to instruct Contractor on appropriate tape application methods in the field or to resolve problems. This visit shall be coordinated to allow City Inspection and Maintenance Staff to participate in the instruction. The Contractor shall allow time for representative to give field taping instructions to his workforce.

PART 2 MATERIALS

2.1 POLYETHYLENE TAPE COATING

A. Provide polyethylene tape coating in accordance with AWWA C214 with a reinforced cement mortar shield in accordance with AWWA C205 and as specified herein. Plant and field applied liquid adhesive, polyethylene tape, and plant and field applied repair tape shall be furnished by a single manufacturer. The physical properties of tape materials shall meet or exceed the requirements of AWWA C214 when tested in accordance with the methods described in Section 5.3, “Coating System Tests”.

B. The tape coating systems consist of an exterior polyethylene tape over the bare metal surface of steel pipe with a reinforced cement mortar coating applied over the tape system. Tape coating systems are specified for:

1. Normal plant cold-applied tape
2. Plant cold-applied tape for special sections, connections and fittings, and plant repairs of cold-applied tape
3. Field joint, field coated fittings and repair of field cold-applied tape.

2.2 LIQUID ADHESIVE

A. Liquid adhesive shall consist of a mixture of suitable rubber and synthetic compounds and a solvent in accordance with AWWA C214. The liquid adhesive shall be Polyken #1039 primer or equivalent.

2.3 STORAGE PRIMER

A. Storage primer on the exposed steel at the tape cutbacks shall be Polyken #924 or equivalent.

2.4 PLANT APPLIED POLYETHYLENE TAPE SYSTEM, POLYKEN, or equivalent (80 mil)

A. Liquid adhesive shall be Polyken #1039 primer.

B. Anti-corrosion inner layer tape shall be Polyken #989 (20 mil), black.

C. First mechanical outer layer tape shall be Polyken #955 (30 mil), gray.

D. Second mechanical outer layer tape shall be Polyken #956 (30 mil), white.

E. Reinforced cement mortar shield 3/4” thick.

F. Weld Stripping Tape shall be Polyken #933 (25 mil), if required.

2.5 PLANT COLD-APPLIED TAPE COATINGS FOR SPECIAL SECTIONS, CONNECTIONS AND FITTINGS, AND PLANT REPAIR COLD-APPLIED POLYETHYLENE TAPE MATERIAL

A. Liquid adhesive shall be Polyken #1039 primer.

B. Anti-corrosion inner layer shall be Polyken #932-50 (50 mil), black.

C. Mechanical layer outer tape for plant fittings and plant repair cold-applied polyethylene tape shall be Polyken #955 (30 mil), white.

D. Reinforced cement mortar shield 3/4” thick.

E. Weld stripping tape shall be Polyken #933 (25 mil), if required.

2.6 FIELD JOINT, FIELD COATED FITTINGS, AND FIELD REPAIR COLD-APPLIED POLYETHYLENE TAPE

A. Primer shall be Polyken #1029.

B. Joint filler tape to be Polyken #939 (125 mil), black.

C. Field joint, field fitting, and field repair outer layer tape shall be Polyken #932, (50 mil).

D. Mechanical layer outer tape for field joint, field fittings and field repair shall be Polyken #932-50, continue inner layer with 50% overlap.

PART 3 EXECUTION

3.1 POLYETHYLENE TAPE COATING

A. Apply polyethylene tape coating to pipe in accordance with AWWA C214. Apply polyethylene tape coating to fittings and specials in accordance with AWWA C209. Apply the reinforced cement mortar shield in accordance with AWWA C205. Any modifications to the aforementioned standards are as stated herein.

B. Certificate of Compliance: Prior to shipment of pipe, furnish a certificate of compliance stating that tape materials and work furnished hereunder will comply or have complied with the requirements of these specifications and AWWA C214 and C209.

3.2 STRAIGHT RUN PIPE APPLICATION

A. For straight run pipe, plant applied conditions, the polyethylene tapes shall be a four layer system consisting of: (1) liquid adhesive; (2) corrosion prevention tape (inner layer); (3) mechanical protective tape (first outer layer); (4) mechanical protective tape (second outer layer)

B. Perform the entire coating operation by experienced workers skilled in the application of polyethylene tapes and cement mortar coating under qualified supervisors. After completion of the tape system, all handling shall be by padded equipment to prevent any damage of the tape system. Testing of tape system shall be performed per 3.5 of this section.

C. All equipment for blasting and application of the tape coating system shall be of such design and condition to comply with all the requirements of AWWA C214 and these specifications. Immediately repair or replace equipment that, in the opinion of the Engineer, does not produce the required results. Include equipment and a repair procedure for correcting defective tape application for use under this specification in the steel pipe fabrication plan. Make available for review a copy of this portion of the fabrication plan, and any updates, at the location of the coating operation, and a repair procedure for correcting defective tape application.

D. Remove the exterior weld bead along the entire exterior surface of the pipe. The exterior weld bead shall be flush with the exterior surface of the pipe with a tolerance of plus 1/32-inch.

E. Surface preparation shall conform to AWWA C214 and the following.

1. Bare pipe shall be clean of all foreign matter such as mud, mill lacquer, wax, coal tar, asphalt, oil, grease, or any contaminants. Remove welding slag or scale from all welds by wire-brushing, hammering, or other satisfactory means. Remove welding splash globules prior to priming.

2. Prior to blast cleaning, inspect surfaces and, if required, preclean in accordance with the requirements of SSPC SP-1, Solvent Cleaning, to remove oil, grease, and all foreign deposits. Remove visible oil and grease spots by solvent wiping. Use only approved solvents that do not leave any residue. Include in the manufacturer's fabrication plan the cleaning solvent applications procedure and safety precautions.

F. Blast cleaning shall conform to AWWA C214 and the following.

1. Blast the pipe surface using a commercially available shot grit mixture to achieve a prepared surface equal to that which is specified in SSPC SP-6, Commercial Blast Cleaning.

2. For plant mortar lined pipe, perform blast cleaning of said exterior surfaces after the initial curing of the spun mortar lining. Perform the exterior blast cleaning in such a manner as not to endanger the mortar lining in the pipe. Completely remove corrosion and foreign substances from the exterior of the pipe in the cleaning operation, and apply liquid adhesive after completion of blast cleaning.

3. Achieve from abrasive blasting an anchor pattern profile a minimum of 1.0 mil, but not exceeding 3.0 mils. Measure the anchor pattern or profile of the blasted surface using comparator tape as specified herein.

4. Inspect the blast cleaned exterior pipe surface for adequate surface preparation prior to application of the liquid adhesive. Surface comparator tapes are to be used by the manufacturer in at least eight random areas, along any given 40-foot length of pipe. The results of the surface comparator tapes are to be documented on the quality control sheet for each pipe section.

5. Coat each pipe section with liquid adhesive and tape within the same day of being blast cleaned. Do not allow blasted and/or blasted and primed pipe to sit overnight. All blasted and primed pipe must be coated by the end of the day. No coating will be permitted on pipe sections showing evidence of rust.

G. Liquid adhesive application shall conform to AWWA C214 and the following.

1. Prior to liquid adhesive application, clean the pipe surface free of foreign matter such as sand, grease, oil, grit, rust particles, and dirt.

2. Apply the liquid adhesive in a uniform thin film at the coverage rate recommended by the manufacturer. Meet the recommendations of the manufacturer for the state of dryness of the liquid adhesive prior to the application of the inner layer of tape.

3. Limit the application of liquid adhesive to that length of pipe which can be taped within the same workday. Pipe coated with liquid adhesive that was not taped within the same workday shall be rejected at the discretion of the Engineer. The liquid adhesive shall be removed and the surface shall be re-primed.

4. Protect liquid adhesive coated pipe sections from moisture, dirt, sand, and other potentially contaminating materials

5. Apply storage primer to the exposed steel pipe at tape cutbacks to prevent oxidation of the cleaned metal surface. Apply minimum of 1.5 mils and maximum of 2.5 mils of storage primer to exposed steel per the manufacturer's recommendations.

H. Inner layer tape application:

1. Apply the inner layer tape directly onto the primed surface using approved mechanical dispensing equipment to assure adequate, consistent tension on the tape as recommended by the tape manufacturer. Use rollers to apply pressure on the tape as it comes in contact with the pipe. Make necessary adjustments to mechanical application equipment to assure a uniform, tight coating. Maintain a tight, smooth, mechanically induced, wrinkle-free coating throughout the application process.

2. The application of tension shall be such that the width of tape will be reduced between 1½ to 2 percent of tape width prior to the pull. Provide a pressure readout gauge and chart recorder, suitable to the Engineer, with the tape let-off machine to document the tape tension during application.

3. Apply inner layer tape at a minimum roll temperature of 70°F. Continuously monitor the temperature of the tape within 12 inches of the point of contact with the pipe surface. Use a chart recorder, suitable to the Engineer, to document the temperature of the tape during application. Sections where the tape application tension and temperature is not maintained within manufacturer's recommendations shall be rejected and the tape removed from the entire pipe section and reapplied.

4. Continuously electronically test the inner tape layer at 6,000 volts immediately following application of the tape by a holiday tester permanently mounted to the tape application station and equipped with an indicator light and audio buzzer, suitable to the Engineer to alert the workmen of the presence of holidays in the coating system.

5. Spirally wrap the inner layer tape over longitudinally or spirally welded pipe. Provide a 1-inch minimum tape overlap.

6. Splice each new roll by overlapping the new tape over the end of the preceding roll by at least 6 inches. Perform this end lap splice by hand or by a mechanical applicator so that the splice is wrinkle free and maintains the continuity of the inner wrap coating. Maintain the wrapping angle of the new roll parallel to that of the previous roll.

7. Provide tape cutbacks based on the joint type required, cutting the tape edge parallel to the end of the pipe. Perform cutbacks using a cutting device that is guided from the end of the pipe to insure a uniform, straight cutback.

I. Mechanical outer layer tape application.

1. Apply the first mechanical outer layer of tape over the inner layer tape using the same type of mechanical equipment used in the application of the inner layer tape. No overlap splice of the other layer coinciding with the overlap splice of the inner layer will be permitted. Provide a minimum 6-inch separation between overlap of splices. Apply two mechanical outer layers of tape as specified herein. The inner layer tape shall be electrically tested, inspected, and approved prior to the application of the first mechanical outer layer tape and the first mechanical outer layer tape shall also be visually inspected and approved prior to the application of the second mechanical outer layer tape. Ensure that both mechanical outer layer tapes are smooth, tight and wrinkle-free.

2. Apply mechanical outer layer tapes in accordance with the requirements for the inner layer tape, except that the minimum tape roll application temperature shall be 90°F. Monitoring for tension and temperature will be required for the mechanical outer layer tapes. The use of rollers to apply pressure on the tape is not required during application of the mechanical outer layer tapes. Holiday testing of the mechanical outer layer tapes is not required during tape application. Test the complete tape system prior to coating as specified herein.

J. Apply a reinforced cement mortar shield over the outer layer of tape in accordance with AWWA C205. Cement mortar shall be per Section 15061.

K. Storage primer application shall conform to AWWA C214 as modified herein:

1. Prior to storage primer application, clean the pipe surface free from foreign matter such as sand, grease, oil, grit, rust particles and dirt.

2. Apply primer only to a dry pipe surface. Whenever the ambient air temperatures are cold enough to cause gelling of the primer, the use of heaters will not be permitted to return the primer back to a fully liquid state. Use new primer at a minimum of 40°F.

3. Apply storage primer to the exposed steel pipe at tape cutbacks to prevent oxidation of the cleaned metal surface. Apply minimum of 1.5 mils and maximum of 2.5 mils of storage primer to exposed steel per the manufacturer's recommendations. Do not place storage primer on the edge of the steel plate.

3.3 FITTINGS COATED AT THE PLANT

A. Coat fittings that cannot be machine coated in accordance with AWWA C209 using materials as specified herein. Weld bead preparation, surface preparation, blast cleaning and liquid adhesive shall be as specified for straight run pipe. Apply an inner layer tape of Polyken #932-50 with a 1-inch minimum tape overlap on all plant coated fittings. Apply an outer layer of cold-applied polyethylene tape as specified herein with a 55 percent overlap on all plant-coated fittings. Provide a minimum thickness of 110 mils for the total tape coat system for plant-coated fittings.

B. Test all completed tape coated fittings in the presence of the Engineer with an electrical flaw detector prior to the application of the cement mortar coating. Applied voltage shall be in the range of 11,000 to 15,000 volts. Repair any holidays found.

C. Repair cement mortar coating defects in accordance with the approved repair procedures.

D. Apply cement mortar coating in accordance with AWWA C205, over the tape-coated fittings after completion of tape coating, testing and inspections.

3.4 TAPE APPLICATION TO FITTINGS, SPECIALS AND PIPE JOINTS (Field)

A. Field cold applied plastic tape coating shall be in accordance with AWWA C209, as modified herein.

B. Prior to welding any fieldjoints, wrap an 18-inch strip of heat resistance material over the entire coated pipe section to avoid damage to the plant applied coating by the hot weld spatter.

C. Clean the pipe surface free of mud, mill lacquer, wax, tar grease, or any foreign matter. The pipe surface shall be free of any moisture and all foreign matter prior to the application of prime.

D. Pack irregularities in joint with elastameric joint filler.

E. Apply primer by brush or roller (4 mil wet, 1 mil dry).

F. After primer has dried, apply tape to the joint and extend a minimum of 3-inch onto adjacent tape wrap. Maintain 55 percent overlap on all field joint tape to produce a minimum thickness of 100 mils.

G. Apply tape with sufficient tension to conform with the surface. The finish wrap shall produce a smooth, wrinkle-free surface.

H. The tape system for pipe joints is shown in Section 2.6.

3.5 INSPECTION OF TAPE COATING

Test the applied tape coating in the presence of the engineer with an electrical holiday detector, as a part of the tape installation process. Repair all holidays and physical damage. If mortar shield is applied at a different location than the tape coating system, a second electrical holiday spark test shall be required after all transportation and handling to the mortar coating location confirming the integrity of the tape undercoating. Upon completion of the mortar coating process a continuity or spark test will again be preformed for the tape system. Repair any holidays and physical damage and spark test, verifying repair.

3.6 MORTAR SHIELD

A. Apply mortar coating in accordance with Section 15061 cement. Mortar lined and coated steel pipe and specials, over the tape coated pipe immediately upon completion of tape wrapping, testing, and inspections.

3.7 PROTECTING COATED PIPE

A. The CONTRACTOR shall protect all coated surfaces from damage prior to and during the pipe installation in accordance with these specifications.

B. In transporting the coated pipe, it shall rest in saddles shaped to the outside diameter of the coated pipe. The saddles shall be in contact with the bottom of the pipe along an arc of at least 60 degrees. Saddles shall be completely lined with adequate padding. No nails or any other fasteners that may damage the coating will be allowed in the installation of the padding of the saddles.

C. While laying tape coated steel pipe, the pipe shall not be rolled or skidded when it is in contact with the ground at any point. Immediately before the coated pipe is lowered into the trench the CONTRACTOR shall provide a visual and holiday inspection of the coating on the entire pipe coating system. Coated pipe shall be lowered into the trench using saddled, not choked, belt slings. The use of chains, hooks, or other equipment which might damage the pipe coating will not be permitted. All other pipe handling equipment and methods shall be approved by the ENGINEER. Pipe stored alongside of the trench shall be supported on padded skids, sand bags, or rock-free sand berms.

END OF SECTION

SECTION 09900 PAINTING AND COATING

PART 1 GENERAL

1.1 DESCRIPTION

This section described the requirements for the preparation of surfaces and subsequent application of protective coatings. The Contractor shall furnish all labor, materials and equipment required for satisfactory completion of all items contained herein. The Contractor shall furnish all necessary safety equipment and protective clothing, as well as be responsible for proper instruction and supervision of their use. Requirements for steel storage reservoirs are specified elsewhere in the Specifications.

1.2 RELATED WORK DESCRIBED ELSEWHERE

The Contractor shall refer to the following Specification section(s) for additional requirements:

A. General Piping System & Appurtenances: 15000

1.3 SUBMITTALS

Contractor shall furnish submittals in accordance with the requirements of the GENERAL PROVISIONS. The following submittals are required:

A. Submit a chart of the manufacturer's available colors for color selection well in advance of painting operation.

B. Submit manufacturer's data sheets showing the following information:

1. Recommended surface preparation.

2. Minimum and maximum recommended dry-film thicknesses per coat for prime, intermediate, and finish coats.

3. Percent solids by volume.

4. Recommended thinners.

5. Statement verifying that the selected prime coat is recommended by the manufacturer for use with the selected intermediate and finish coats.

6. Application instructions including recommended application, equipment, humidity, and temperature limitations.

7. Curing requirements and instructions.

C. Submit certification that all coatings conform to applicable local Air Quality Management City rules and regulations for products and application.

1.4 PAYMENT

Payment for the Work in this section shall be included as part of the lump-sum or unit-price bid amount for which such Work is appurtenant thereto.

PART 2 MATERIALS

2.1 GENERAL

All materials shall be those of current manufacture and shall meet all applicable regulations for the application and intended service. All coats of any particular coating system shall be of the same manufacturer and shall be approved by the manufacturer for the intended service. In the event that a product specified herein is no longer manufactured or does not meet current regulations, the Contractor shall provide a substitute, currently manufactured product of at least equal performance which meets all applicable regulations subject to Engineer's approval, at no additional cost.

All materials shall be delivered to the Project Site in their original, unopened containers bearing the manufacturer's name, brand, and batch number. Standard products of manufacturers other than those specified will be accepted when it is proved to the satisfaction of the Engineer they are equal in composition, durability, usefulness and convenience for the purpose intended. Paint listed in the system refers to products of the following manufacturers and distributors:

Ameron Corrosion Control Division, Brea, CA
I.C. Devoe, Louisville, KY
Engard Coating Corporation, Long Beach, CA
I. DuPont de Nemours & Company, Los Angeles, CA
Tnemec Company, Inc., Kansas City, MO 64141

All surfaces to be coated or painted shall be in the proper condition to receive the material specified before any coating or painting is done. No more sandblasting or surface preparation than can be coated or painted in a normal working day will be permitted. All sharp edges, burrs, and weld spatter shall be removed. All concrete and masonry surfaces shall cure 30 days prior to coating or painting.

Surface preparation, prime coatings, and finish coats for the various systems are specified herein. Unless otherwise noted, all intermediate and finish coats shall be of contrasting colors. It is the intent that the coating alternates specified herein serve as a general guide for the type of coating desired.

2.2 VALVES

A. Exterior Coating: Coat metal valves located above ground, in vaults or in structures the same as the adjacent piping. If the adjacent piping is not coated, then coat valves per this Specification section unless otherwise noted. Apply the specified prime coat at the place of manufacture. Apply intermediate and finish coats in the field. Finish coat shall match the color of the adjacent piping. Coat handwheels and floor stands the same as the valves. Coat the exterior of buried metal valves at the place of manufacture per this specification.

B. Coating (Devoe Alternate): Prime coat shall be BarRust 231 or Devran 200 applied at 2 to 3 mils dry-film thickness. Intermediate coat shall be Devran 224H Epoxy applied at 2 to 4 mils dry-film thickness. Finish coat shall be 379 Urethane applied at 2 to 3 mils dry-film thickness.

C. Interior Lining: Valves 4-inches and larger shall be coated on their interior metal surfaces excluding seating areas and bronze and stainless-steel pieces. Sandblast surfaces in accordance with SSPC-SP-10 (near white blast cleaning). Remove all protuberances which may produce pinholes in the lining. Round all sharp edges to be coated. Remove any contaminants which may prevent bonding of the lining. Coat the interior ferrous surfaces using one of the following methods:

1. Apply powdered thermosetting epoxy per the manufacturer's application recommendations to a thickness of 10 to 12 mils.

2. Apply two coats of polyamide epoxy to a dry-film thickness of 10 to 12 mils total. Follow the manufacturer's application recommendations including minimum and maximum drying time between the required coats.

3. Apply two coats of Tnemec Series 140 (for potable water) or Series 69 (for non-potable water), or equal, to a dry film thickness of 10 to 12 mils total. Follow manufacturer's application recommendations including minimum and maximum drying time between required coats.

4. Apply two coats of Devoe Bar-Rust 233H Epoxy applied to a dry-film thickness of 6 to 8 mils, each. Total dry-film thickness shall be 10 to 12 mils minimum.

All epoxy lining shall be applied at the factory by the manufacturer of the valve, and shall meet current Volatile Organic Compound (VOC) content regulations. Epoxy lining for potable water valves shall also be listed by National Sanitation Foundation (NSF) for contact with potable water.

Test the valve interior linings at the factory with a low-voltage holiday detector. The lining shall be holiday free.

2.3 METAL, INTERIOR AND EXTERIOR, NORMAL EXPOSURE

A. General: The Contractor shall paint all exposed steelwork, non-galvanized handrails, exposed pipework, fittings, all mechanical equipment, pumps, motors, doors, door frames and window sash with this coating system. All metalwork previously given a shop prime coat approved by the Owner's Representative shall be touched up as required in the field with Tnemec Series 4 Versare Primer or equal.

B. Surface Preparation: All exterior metal surfaces which are to be painted shall be commercial blast cleaned per Specification SP-6 (commercial blast cleaning) except as otherwise specified, in locations where sandblasting would damage previously coated surfaces and installed equipment, and in locations where dry sandblasting is prohibited. The above locations in which SP-6 commercial sandblasting is not possible shall be given a SP-3 power tool cleaning. This sandblasting shall be done not more than 8 hours ahead of the painting, subject to humidity and weather conditions between the time of sandblasting and painting operations. If any rusting or discoloration of sandblasted surfaces occurs before painting, such rusting or discoloration shall be removed by additional sandblasting. Sandblasted surfaces shall not be left overnight before painting.

C. Coating (Tnemec Alternate): Prime coat or spot prime coat as required shall be Tnemec Series 4 Versare primer applied to a dry-film thickness of 2 to 3.5 mils. Two or more finish coats of Tnemec Series 2H Tneme-Gloss enamel shall be applied to a thickness of 1.5 to 3.5 mils. Total dry-film thickness of the complete system shall be 7 mils, minimum.

D. Coating (Devoe Alternate): Prime coat or spot prime as required shall be 4140 Q.D. Alkyd Primer. Two or more finish coats of Devshield 4328 Alkyd applied to a dry-film thickness of 1.5 to 2 mils, each. Total dry-film thickness of the complete system shall be 5 mils, minimum.

2.4 METAL, SUBMERGED OR INTERMITTENTLY SUBMERGED

A. General: All submerged metalwork, gates, equipment, valves, exposed pipework and all other metalwork within areas which will be submerged, except as noted hereinafter, shall be painted with this coating system.

B. Surface Preparation: All metal surfaces shall be field sandblasted according to SSPC-SP-10 (near white blast cleaning).

C. Coating (Tnemec Alternate): Prime coat shall be Tnemec Series 69 Epoxoline II applied to a dry-film thickness of 4 to 6 mils. Two finish coats of Tnemec Series 69 Epoxoline II shall be applied to a dry-film thickness of 4 to 6 mils each coat. Total try-film thickness of the complete system shall be a minimum of 12 mils.

D. Coating (Devoe Alternate): Apply two coats of Bar-Rust 233H Epoxy applied to a dry-film thickness of 6 to 8 mils each coat. Total dry-film thickness of the complete system shall be a minimum of 12 mils.

2.5 METAL, SEVERE EXPOSURE TO MOISTURE OR CHEMICAL FUMES

A. Surface Preparation: All metal surfaces shall be field sandblasted according to SSPC-SP-10 (near white blast cleaning).

B. Coating (Tnemec Alternate): Prime coat shall be Tnemec Series 104 H.S. Epoxy to a dry-film thickness of 6 to 10 mils. One or more finish coats of Tnemec Series 104 H.S. Epoxy topcoat shall be applied. Total dry-film thickness shall be a minimum of 12 mils.

C. Coating (Devoe Alternate): Prime coat shall be Catha-Coat 304V Zinc, 2 to 3 mils dry-film thickness. Intermediate coat shall be Devran 224H Epoxy applied at 4 to 6 mils dry-film thickness. Finish coat shall be Devthane 379 Urethane applied at 2 to 3 mils dry-film thickness. Total dry-film thickness shall be 8 mils minimum.

2.6 METAL, HIGH-TEMPERATURE EXPOSURE

A. General: Engine mufflers, exhaust systems and other metal surfaces subjected to high temperatures shall be coated with this system.

B. Surface Preparation: Surface shall be field sandblasted in accordance with SSPC-SP-10 (near white blast cleaning).

C. Coating (Tnemec Alternate): One coat of Tnemec Series 90-96 Tneme-Zinc to a minimum total dry-film thickness of 2 to 3.5 mils.

D. Coating (Devoe Alternate): One coat of Catha-Coat 304V Zinc to a dry-film thickness of 2 to 4 mils.

2.7 METAL, GALVANIZED, ALUMINUM, COPPER, OR BRASS

A. Surface Preparation: Surfaces shall be solvent cleaned in accordance with SSPC-SP-1 (solvent cleaning) and SSPC-SP-2 (hand tool cleaning).

B. Coating: Pre-treatment prime coat shall be Tnemec Series 32-1215 Tneme-Grip or Sinclair 7113 Wash Primer applied at mil dry-film thickness. Next, apply recommended coating or paint for the particular surface to be coated.

C. Coating (Devoe Alternate): Pre-treatment prime coat shall be Devoe BarRust 231 primer applied at 3 mil dry-film thickness. Next, apply recommended coating or paint for the particular surface to be coated.

2.8 METAL, BURIED

A. General: The Contractor shall coat all buried metal which includes valves, bolts, nuts, structural steel and fittings. It does not include steel storage reservoirs.

B. Surface Preparation: Sandblast to SSPC-SP-6 (commercial blast cleaning)

C. Coating (Tnemec Alternate): Prime none. Finish with two coats of Tnemec Series 46-465 H.B. Tnemecol or equal at 10 to 12 mils dry-film thickness, each. Total dry-film thickness shall be 20 mils minimum.

D. Coating (Devoe Alternate): Prime with Devtar 221 (5A) Epoxy applied at 8 mil dry-film thickness. Two coats of Devtar (5A) Epoxy applied at 8 mils dry-film thickness, each. Total dry-film thickness shall be 24 mils, minimum.

PART 3 EXECUTION

3.1 GENERAL

The Contractor shall arrange with the Owner's Representative so that all surface preparation may be inspected and approved prior to the application of any coatings.

The Contractor is hereby notified that the Engineer will inspect the Work prior to the expiration of the warranty period and all defects in workmanship and material shall be repaired by the Contractor, at his own expense.

3.2 WORKMANSHIP

It is the intent of the Specifications that finishes shall be provided which meet standards for best grades of painting. Drop cloths shall be placed where required to protect floors, surfaces and equipment from spatter and dropping, not to receive paint or coatings.

The Contractor shall take all necessary precautions to protect all adjacent Work and all surrounding property and improvements from any damage whatsoever as a result of the painting and coating operation.

Only good, clean brushes and equipment shall be used and all brushes, buckets, and spraying equipment shall be cleaned immediately at the end of each painting period.

Each coat of paint shall be of the consistency as supplied by the manufacturer, or thinned, if necessary, and applied in accordance with manufacturer's instructions. Each coat shall be well brushed, rolled or sprayed to obtain a uniform and evenly applied finish. Work shall be free from "runs", "bridges", "shiners", or other imperfections due to faulty intervals. Particular care shall be taken to obtain a uniform unbroken coating over all bolts, threads, nuts, welds, edges and corners. Paint shall not be applied in extreme heat, in dust or smoke laden air, or in damp or humid weather, unless written permission of the Engineer is obtained.

If paint is applied by spray, the air pressure used shall be within the ranges recommended by both the paint and spray equipment manufacturers. Spray painting shall be conducted under controlled conditions and the Contractor shall be fully responsible for any damage occurring from spray painting.

Care shall be exercised not to damage adjacent Work during sandblasting operations. Stainless steel need not be sandblasted. Blasted surfaces shall not be left overnight before coating. All dust shall be removed from the surface following sandblasting.

3.3 APPLICATION PROCEDURES

A. Surfaces to be Coated: All surfaces of materials furnished and constructed are to be painted or coated per the Specifications except as indicated below.

B. Surfaces Not To Be Coated: The following surfaces shall not be coated unless otherwise noted on the Plans and shall be fully protected when adjacent areas are painted.

Aluminum grating	Machined surfaces
Aluminum surfaces	Metal letters
Bearings	Mortar-coated pipe and fittings
Brass and copper tubing, submerged*	Nameplates on machinery
Buried pipe	Pipe interior*
Couplings	Shafts
Grease fittings	Stainless steel
Hardware	Switch plates
Lighting fixtures	

* unless specifically required on the Plans or elsewhere in the Specifications

C. Protection of Surfaces Not To Be Coated: Surfaces not intended to be painted shall be removed, masked, or otherwise protected. Drop cloths shall be provided to prevent paint materials from falling on or marring adjacent surfaces. Working parts of mechanical and electrical equipment shall be protected from damage during surface preparation and painting process. Openings in motors shall be safely masked to

prevent paint and other materials from entering the motors. All masking materials shall be completely removed and surfaces cleaned at completion of painting operations.

D. Weather Conditions: Paint shall not be applied in the rain, wind, snow, mist, and fog or when steel or metal surface temperatures are less than 5°F above the dew point.

Paint shall not be applied when the relative humidity is above 80%, the air temperature is above 90°F, or the temperature of metal to be painted is above 125°F.

Alkyd, chlorinated rubber, inorganic zinc, silicone aluminum, or silicone acrylic paints shall not be applied if air or surface temperature is below 50°F or expected to be below 50°F within 24 hours.

Epoxy, coal tar epoxy, acrylic latex, and polyurethane paints shall not be applied on an exterior or interior surface if air or surface temperature is below 50°F or expected to drop below 50°F within 24 hours.

3.4 SURFACE PREPARATION

A. General: Sandblast or prepare only as much surface area as can be coated in one day. All sharp edges, burrs, and weld spatter shall be removed. Epoxy-coated pipe that has been factory coated shall not be sandblasted.

B. SSPC Specifications: Wherever the words "solvent cleaning", "hand tool cleaning", "wire brushing", or "blast cleaning" or similar words are used in the Specifications or in paint manufacturer's specifications, they shall be understood to refer to the applicable SSPC (Steel Structures Paint Council, Surfaces Preparation Specifications, ANSI A159.1) Specifications listed below:

SP-1	Solvent Cleaning	SP-6	Commercial Blast Cleaning
SP-2	Hand Tool Cleaning	SP-7	Brush-Off Blast Cleaning
SP-3	Power Tool Cleaning	SP-8	Pickling
SP-5	White Metal Blast Cleaning	SP-10	Near White Blast Cleaning

Oil and grease shall be removed from aluminum and copper surfaces in accordance with SSPC SP-1 using clean cloths and cleaning solvents.

Weld spatter and weld slag shall be removed from metal surfaces. Rough welds, beads, peaked corners, and sharp edges including erection lugs shall be ground smoothly in accordance with SSPC SP-2 and SSPC SP-3.

Welds shall be neutralized with a chemical solvent that is compatible with the specified coating materials using clean cloths and chemical solvent.

C. Abrasive Blast Cleaning: Dry abrasive blast cleaning shall be used for metal surfaces. Do not recycle or reuse contaminated blast particles.

Dry clean surfaces to be coated by dusting, sweeping, and vacuuming to remove residue from blasting. Apply the specified primer or touch-up coating within the period of an 8-hour working day. Do not apply coating over damp or moist surfaces. Reclean prior to application of primer or touch-up coating any blast cleaned surface not coated within said 8-hour period.

Prevent damage to adjacent coatings during blast cleaning. Schedule blast cleaning and coating such that dust, dirt, blast particles, old coatings, rust, mill scale, etc., will not damage or fall upon wet or newly coated surfaces.

3.5 PROCEDURES FOR THE APPLICATION OF COATINGS

The recommendations of the coating manufacturer shall be followed, including the selection of spray equipment, brushes, rollers, cleaners, thinners, mixing, drying time, temperature and humidity of application, and safety precautions.

Coating materials shall be kept at a uniform consistency during application. Each coating shall be applied evenly, free of brush marks, sags, runs, and other evidence of poor workmanship. A different shade or tint shall be used on succeeding coating applications to indicate coverage where possible. Finished surfaces shall be free from defects or blemishes.

Only thinners recommended by the coating manufacturer shall be used. If thinning is allowed, do not exceed the maximum allowable amount of thinner per gallon of coating material.

Apply a brush coat of primer on welds, sharp edges, nuts, bolts, and irregular surfaces prior to the application of the primer and finish coat. The brush coat shall be done prior to and in conjunction with the spray coat application. Apply the spray coat over the brush coat.

Apply primer immediately after blast cleaning and before any surface rusting occurs, or any dust, dirt, or any foreign matter has accumulated. Reclean surfaces by blast cleaning that have surface colored or become moist prior to coating application.

A. Paint Mixing: Multiple-component coatings shall be prepared using all the contents of each component container as packaged by the paint manufacturer. Partial batches shall not be used. Multiple-component coatings that have been mixed beyond their pot life shall not be used. Small quantity kits for touch-up painting and for painting other small areas shall be provided. Only the components specified and furnished by the paint manufacturer shall be mixed. For reasons of color or otherwise, additional components shall not be intermixed, even within the same generic type of coating.

B. Field Touch Up of Shop-Applied Prime Coats: Organic Zinc Primer: Surfaces that are shop primed with inorganic zinc primers shall receive a field touch up of organic zinc primer to cover all scratches or abraded areas. Organic zinc coating system shall have a minimum volume solids of 54% and a minimum zinc content of 14 pounds per gallon. Coating shall be of the converted epoxy, epoxy phenolic, or urethane type and shall be manufactured by the prime coat and finish coat manufacturer.

   Other Primers: Surfaces that are shop primed with other than organic zinc primer shall receive a field touch up of the same primer used in the original prime coat.

3.6 DRY-FILM THICKNESS TESTING AND REPAIR

A. Special Instructions to the Contractor: The Contractor shall furnish to the Owner at no charge for use during execution of the Work, necessary dry-film thickness gauge and electrical flaw detection equipment. The Contractor shall perform the holiday (pinholes) inspection in the presence of the Owner's Representative, and the Contractor shall monitor wet film measurements throughout the application of each coat of coating.

B. Coating Thickness Testing: Coating thickness specified for steel surfaces shall be measured with a magnetic-type dry-film thickness gauge. Dry-film thickness gauge shall be provided as manufactured by Mikrotest or Elcometer. Each coat shall be checked for the correct dry-film thickness. Measurement shall not be made until a minimum of eight hours after application of the coating. Non-magnetic surfaces shall be checked for coating thickness by micrometer measurement of cut and removed coupons. Contractor shall repair coating at all locations where coupons are removed.

C. Holiday Testing: The finish coat (except zinc primer and galvanizing) shall be tested by the Contractor in the presence of the Engineer for holidays and discontinuities with an electrical holiday detector of the low-voltage, wet-sponge type. Detector shall be provided as manufactured by Tinker, Rasor, K-D Bird Dog, or approved equal.

D. Repair: If the item has an improper finish, color, insufficient film thickness, or holidays, the surface shall be cleaned and top-coated with the specified paint material to obtain the specified color and coverage. Visible areas of chipped, peeled, or abraded paint shall be hand or power-sanded, feathering the edges. The areas shall then be primed and finish coated in accordance with the Specifications. Work shall be free of runs, bridges, shiners, laps, or other imperfections.

3.7 CLEANUP

Upon completion of all painting and coating Work, the Contractor shall remove all surplus materials and rubbish. The Contractor shall repair all damage and shall leave the premises in a clean and orderly condition.

END OF SECTION

SECTION 09902 PETROLATUM WAX TAPE COATING

PART 1 GENERAL

1.1 SCOPE

This section covers the work necessary to furnish and install petrolatum wax tape coating on buried ferrous materials including pipe flanges, bolted fittings and couplings, valves and other buried pipeline appurtenances, complete, as shown or specified.

1.2 SUBMITTALS DURING CONSTRUCTION

Submit manufacturer's technical product data, details, installation instructions and general product recommendations.

1.3 PRODUCT IDENTIFICATION

The use of a manufacturer's name and model or catalog number is for the purpose of establishing the standard of quality and general configuration desired only. Products of other manufacturers will be considered in accordance with the Contract Documents.

PART 2 MATERIALS

2.1 GENERAL

Wrap all exposed surfaces of buried ferrous pipe, flanges, couplings and other pipeline appurtenances (including bolts, nuts, etc.) with petrolatum wax tape, unless another corrosion protection system (other than a factory-installed paint coating) is otherwise specified or indicated by the Contract Drawings. Exposed piping shall be wrapped only where specifically called out on the Drawings. Ductile iron pipe encased with polyethylene sheathing shall not be wrapped with this product.

2.2 PRIMER

Exposed surfaces shall be prime coated with a blend of petrolatum, plasticizer, and corrosion inhibitor having a paste-like consistency. The material shall have the following properties:

Pour Point	400-100° F
Flash Point	350° F minimum
Approximate Coverage	1 gal/100 square feet
Color	Brown

The primer shall be Trenton Wax-Tape Primer or equivalent.

2.3 WAX TAPE

Two types of petrolatum wax tape shall be available from the manufacturer: one type for buried installations and another type for above-ground installations.

Buried Installations: The covering material shall be a plastic-fiber felt tape, saturated with a blend of petrolatum, plasticizers, and corrosion inhibitors that is easily formable over irregular surfaces. The tape shall have the following properties:

Color:	Brown
Saturant Pour Point	115° - 125°F
Thickness	70-90 mils
Dielectric Strength	170 volts/mil
Tape Width	6 inches

Wax tape shall be Wax-Tape #1 as manufactured by The Trenton Corporation (Ann Arbor, Michigan), or approved equal.

2.4 OUTER COVERING

The primed and wax-tape wrapped surface shall be wrapped with a plastic tape covering consisting of three (3) layers of 50 gauge, clear, polyvinylidene chloride, high cling membranes wound together as a single sheet. The material shall have the following properties:

Width	6 inches
Thickness	1.5 mils
Dielectric Strength	2000 volts/mil
Water Absorption	Negligible
Color	Clear

The outer covering shall be Trenton Poly-Ply or approved equal.

2.5 OTHER PETROLATUM WAX TAPE SYSTEM COMPONENTS

Any components not listed above, but required for a complete petrolatum wax tape coating system as recommended for this application by the manufacturer shall be provided at no additional cost to Owner.

PART 3 EXECUTION

3.1 GENERAL

The petrolatum wax tape system shall be installed in conformance with the manufacturer's recommendations.

END OF SECTION

SECTION 15000 GENERAL PIPING SYSTEM AND APPURTENANCES

PART 1 GENERAL

1.1 DESCRIPTION

This Section describes the requirements and procedures for piping systems and appurtenances that apply to a number of other complimentary Specification Sections. The items are listed in this Section to avoid repetition in Sections elsewhere. This Section includes, but is not limited to: Temporary above ground piping (high line), wet taps, flexible pipe couplings, grooved and shouldered end couplings, joint restraint system, field touch up, bolts, nuts, polyethylene wrap, warning/identification tape, tracer wire, gate well and extension stems, meter boxes, abandonment and removal of existing facilities, and salvage.

1.2 REFERENCE STANDARDS

The publications listed below form part of this specification to the extent referenced and are referred to in the text by the basic designation only. Reference shall be made to the latest edition of said standards unless otherwise called for.

A. American National Standards Institute (ANSI)

B. American Society for Testing and Materials (ASTM)

1.3 RELATED WORK SPECIFIED ELSEWHERE

CMWD Standard Drawings

1.4 SUBMITTALS

Submit manufacturers' catalog data showing dimensions, materials of construction by ASTM reference and grade and coatings..

1.5 LINING CONTAMINATION PREVENTION

Volatile organic compounds present in the linings of items in contact with potable water or recycled water shall not exceed concentrations allowed by the latest requirements of the State Office of Drinking Water and Department of Health Services. Some products and materials may also require proof of NSF certification on the lining materials to be used.

1.6 TEMPORARY ABOVEGROUND PIPE (HIGH LINE)

High line piping, where shown on the Approved Plans or required by the City Engineer, shall be furnished, installed, disinfected, connected, maintained, and removed by the Contractor. Bacteriological sampling and testing shall be performed by a State of California Certified testing laboratory. The Contractor shall provide a submittal to the City showing pipe layout, materials, sizing, flow calculations, schedule and duration of use, and disinfection for all high line piping. The submittal shall be reviewed and approved by the Engineer prior to ordering or delivery of any materials.

1.7 PIPE TAPPING (WET TAP)

All pipe tap (wet tap) connections to existing pipelines, whether for mainline extensions or service laterals, shall be performed by the Contractor under the inspection of the City. The Contractor shall provide materials and labor to excavate, pour thrust block, backfill, compact, and repair pavement as indicated in this Section.

1.8 JOINT RESTRAINT SYSTEM

Joint Restraint Systems may be used for PVC or ductile-iron pipe only with prior approval of the City Engineer. Joint restraint systems shall be used in the place of, or in conjunction with, concrete thrust blocks as directed. Restrained joint systems shall be wax tape coated and polyethylene encased. Contractor shall submit shop drawings, calculations, and catalog data for joint restraint systems.

Splined gaskets, also known as joint restraint gaskets, may be used for PVC or ductile-iron pipe located within casings, or for PVC pipe casings, only.

1.9 POLYETHYLENE ENCASEMENT

Polyethylene encasement shall be used for all ferrous metal materials that are not protected with annodes.

A. Polyethylene wrap shall be used for the protection of buried valves in conjunction with wax tape.

B. Polyethylene sleeves shall be used for the protection of buried ductile iron pipe and fittings. Where the use of a sleeve is not practical, the fittings may be wrapped. Additionally, all bolted connections shall be coated with wax tape in accordance with Section 09902.

C. Polyethylene wrap or sleeves may also be installed around buried PVC pipe for recycled water identification.

1.10 WARNING/IDENTIFICATION TAPE

Warning/identification tape shall be used to identify location of underground utilities and to act as a warning against accidental dig-ins of buried utilities. Warning/identification tape shall be used on all underground water and recycled water mains, potable and recycled water irrigation systems, sewer mains, and all related appurtenances. Warning/identification tape shall also be used on cathodic protection wiring systems and tracer wire brought into and out of access ports.

1.11 GATE WELLS

Gate Wells shall be used for buried valves 4" and larger, unless otherwise indicated on the Standard Drawings. Gate well box and lid shall be used on all gate wells.

1.12 VALVE STEM EXTENSION

Valve Stem Extensions shall be installed when the valve operating nut is more than 5' below grade. Stem extensions shall be of sufficient length to bring the operating nut to a point between 12" and 18" below the gate well lid.

1.13 METER BOXES

A. Meter boxes shall be used for all water meters.

B. Meter boxes shall be sized for the specific meter size or size as indicated on the Standard Drawings.

1.14 RECYCLED WATER IDENTIFICATION

Facilities installed for the use of recycled water shall be identified with purple color coating, identification labels, or signs.

1.15 CURB IDENTIFICATION MARK FOR SERVICES

The Contractor shall mark the location of all potable water, recycled water and sewer laterals at the curb crossing by stamping the face of the curb in 2" high letters as described below:

A. Potable water laterals shall be stamped with a letter "W".

B. Recycled water laterals shall be stamped with a letter "RW".

C. Sewer laterals be stamped with a letter "S".

PART 2 MATERIALS

2.1 TEMPORARY ABOVEGROUND PIPE (HIGH LINE)

High line piping layout, materials and appurtenances shall be as indicated on the approved submittal.

2.2 FLEXIBLE PIPE COUPLINGS

Flexible pipe couplings shall be in accordance with the Approved Materials List and as described below:

A. Steel Couplings shall have middle rings made of steel conforming to ASTM A 36/A 36M, A 53 (Type E or S), or A 512 having a minimum yield strength of 207 MPa (30,000 psi). Follower rings shall be ductile-iron per ASTM A 536, or steel per ASTM A 108, Grade 1018 or ASTM A 510, Grade 1018. Minimum middle ring length shall be 7" for pipe sized 6" through 24".

B. Sleeve bolts shall be made of stainless steel per ASTM A193 and shall have a minimum yield strength of 276 MPa (40,000 psi), an ultimate yield strength of 414 MPa (60,000 psi), and shall conform to AWWA C111.

2.3 GROOVED END OR SHOULDERED COUPLINGS FOR DUCTILE IRON OR STEEL PIPE

Groove end or shouldered couplings shall be in accordance with the Approved Materials List and as described below:

A. Use square-cut shouldered or grooved ends per AWWA C606. Grooved-end couplings shall be malleable iron per ASTM A 47, or ductile iron per ASTM A 536. Gaskets shall be per ASTM D 2000.

B. Bolts in exposed service shall conform to ASTM A 183, 69 MPa (10,000 psi) tensile strength.

2.4 JOINT RESTRAINT SYSTEM

Joint Restraint Systems shall be ductile-iron and shall consist of a split-ring restraint with machined (not cast) serrations – on the inside diameter, a back-up ring, and connecting bolts, and shall be selected from the Approved Materials List.

Splined gaskets, also known as joint restraint gaskets, shall be a rubber-ring type with stainless steel locking segments vulcanized into the gasket.

2.5 FIELD TOUCH-UP APPLICATIONS

All surfaces of metallic appurtenances in contact with potable water and not protected from corrosion by another system shall be shop-coated by the manufacturer. Appurtenances with damaged coatings shall be repaired or replaced as directed by the Engineer. Touch-up of damaged surfaces, when allowed by the Engineer, shall be performed in accordance with the manufacturer's recommendations.

2.6 BOLTS AND NUTS

Bolts and nuts shall be as indicated below.

A. Cadmium-plated or zinc-plated bolts and nuts shall be used for the installation of pipelines up to 20" diameter and shall be carbon steel conforming to ASTM A307, Grade A, unless otherwise indicated on the approved drawings. Bolts shall be standard ANSI B1.1, Class A coarse threads. Nuts shall be standard ANSI B1.1, Class 2H coarse threads.

B. Stainless steel bolts and nuts shall be used for the installation of pipelines 24" diameter and larger and for submerged flanges. Bolts and nuts shall be Type 316 stainless steel conforming to ASTM A193, Grade B8M for bolts, and Grade 8M for nuts. Use lubricant for stainless steel belts and nuts. Lubricant shall be Husky Lube “O” Seal by Husk-ITT Corporation or equal

C. All bolt heads and nuts shall be hexagonal, except where special shapes are required. Bolts shall be of such length that not less than 1/4" or more than 1/2" shall project past the nut in tightened position.

D. Provide a washer under each nut and under each bolt head. Use washers of the same materials as the nuts.

2.7 POLYETHYLENE ENCASEMENT

Polyethylene encasement shall be as indicated below and shall be selected from the Approved Materials List. Polyethylene materials shall be kept out of direct sunlight exposure.

A. Polyethylene sleeves shall be a minimum 0.012" thick polyethylene plastic in accordance with AWWA C105.

B. Polyethylene wrap shall be a minimum 0.008" thick polyethylene plastic in accordance with AWWA C105.

C. Polyethylene wrap and sleeves shall be clear for use with potable water and purple for use with recycled water.

D. Polyethylene or vinyl adhesive tape a minimum of 2" wide or plastic tie straps shall be used to secure polyethylene encasement.

2.8 WARNING/IDENTIFICATION TAPE

Warning/identification tape shall be as indicated below and in accordance with the Approved Materials List.

A. Tape shall be an inert plastic film or metallic formulated for prolonged underground use that will not degrade when exposed to alkalies, acids and other destructive substances commonly found in soil.

B. Tape shall be puncture-resistant and shall have an elongation of two times its original length before parting.

C. Tape shall be colored to identify the type of utility intended for identification. Printed message and tape color shall be as follows:

Printed Message		Tape Color
Caution:	Waterline Buried Below	Blue
Caution:	Recycled Waterline Buried Below	Purple
Caution:	Cathodic Protection Cable Buried Below	Red
Caution:	Electric Line Buried Below	Red

Ink used to print messages shall be permanently fixed to tape and shall be black in color with message printed continuously throughout.

D. Tape shall be minimum 0.004" thick x 6" wide with a printed message on one side. Tape used with the installation of onsite potable and recycled water irrigation systems shall be a minimum of 3" wide.

2.9 INSULATING UNIONS & COUPLINGS

A. For insulating unions, use a molded nylon sealing sleeve mounted in a three-piece malleable-iron body (ASTM A47 or A197). Use thread ends when connecting to steel piping, and copper solder joint when connecting to copper piping. Minimum working pressure shall be 150 psi.

B. Threaded insulating couplings shall provide dielectric protection from electrolytic corrosion at points where piping of dissimilar metals is joined.

2.10 GATE WELLS

Valve gate wells shall be as indicated below in accordance with the Approved Materials List.

A. Valve gate well size and material shall be as follows:

Valve Size	Gate Well Size and Material
4” and Larger	8" diameter Class 150, C-900 PVC

1. PVC gate wells for use in recycled water system applications shall be white.

2. PVC gate wells for use in potable water system applications shall be white or blue.

B. Gate well lids shall be as indicated below in accordance with the Approved Materials List.

1. Gate well box lids shall be circular ductile-iron, and shall include a skirt for a close fit inside the upper portion of the gate well. Lids shall be cast with the AGENCY NAME (CMWD) and the word WATER for use on potable water systems, and Recycled Water for recycled water systems.

2. Lids shall be Brooks 4TT with long skirt or approved equal.

3. Normally closed potable water valves and recycled water valves shall use box lids by Brooks 3RT or approved equal.

4. Lid sizes shall be as follows:

Valves	Gate Well Lid
4” and Larger where the speed limit is 35 mph or greater	Machined ductile-iron frame and 8" lid with 6" long skirt

2.11 VALVE STEM EXTENSIONS

Stem extensions shall be complete with operating nut, location ring, and lower socket to fit valve-operating nut. The configuration of the extension stem nut shall match that of the valve it operates.

A. Stem extensions shall be square fiberglass tubing glued together to make a continuous one-piece unit used to a maximum length 8'.

B. Steel stem extensions shall be used where the maximum length of the extension exceeds 8' or at the request of the City Engineer. Steel stem extensions may be round or square hot-dipped galvanized steel tubing of solid design (no pinned couplings permitted) with guides.

2.12 METER BOXES

Meter boxes shall be polymer-type boxes with lids selected from the Approved Materials List.

A. Meter box sizes shall be as follows:

Meter Box Size	Meter Box Uses
12" x 20"	1" water services
17" x 30"	2" water services

B. Meter box lids for use in potable water system applications shall be gray.

C. Meter box lids for use in recycled water system applications shall be purple.

2.13 RECYCLED WATER IDENTIFICATION

Materials used to identify pipe and appurtenances used for recycled water, not manufactured in purple color, shall be as described in Volume 2 of the Carlsbad Engineering Standards.

PART 3 EXECUTION

3.1 TEMPORARY ABOVEGROUND PIPE (HIGH LINE)

A. All high line piping, fittings, and service connections shall be furnished, installed, and maintained by the Contractor, and the Contractor shall make connections to a water source designated by the City Engineer.

B. All pipe, valves, fittings, hose and connections furnished by the Contractor shall be of good quality, clean, and suitable for conveying potable water in the opinion of the City Engineer.

C. The high line pipe shall be installed in such a manner that it will not present a hazard to traffic and will not interfere with access to homes and driveways along its route.

D. Valves shall be installed at 200' intervals or as directed by the City Engineer. The use of pressure reducing valves (PRV) may be required as directed by the City Engineer.

E. The Contractor shall be responsible for disinfecting all high lines, connections, and flushing.

F. Following disinfection and acceptance of the high line as a potable water system, the Contractor shall maintain continuous service through the high line piping to all consumers normally served both directly and indirectly by the pipeline.

G. Upon completion of the work, the Contractor shall remove the high line piping and appurtenances.

H. If progress in making repairs to the high line is inadequate, the City Engineer, may order necessary corrective measures. Corrective measures may consist of directing City personnel or another contractor to complete the work. All costs for corrective measures shall be borne by the Contractor.

3.2 CONNECTION TO EXISTING FACILITIES (WET TAPS AND CUT-IN INSTALLATIONS)

The Contractor shall furnish the tapping sleeve or tee, valves and all other materials as called for in the Standard Specifications in accordance with the Approved Materials List. The Contractor shall provide all equipment and labor required for the excavation and installation of the connection including, but not limited to, backfill and pavement replacement. In certain circumstances the Contractor may be required to provide a water truck, high line, and fittings as part of the equipment for making the connections. In addition, the Contractor shall assist the City in alleviating any hardship incurred during a shutdown for connections. Emergency standby equipment or materials may be required of the Contractor by the City Engineer.

Wet taps or cut-in tee and valve installations shall be performed as follows:

A. Prior to construction, Contractor shall pothole the existing pipe at the location of the proposed connection. The City shall inspect the pothole prior to Contractor's repair of trench. Refer to Section 01000 for protection of existing facilities. Contractor shall record the following information on as-built drawings:

1. Pipe size, outside diameter.
2. Pipe type such as ACP, PVC, Ductile-Iron or Steel.
3. Pipe class and/or pressure rating.
4. Elevation, grade, and alignment.
5. Location of collars, pipe bells, fittings or couplings, if found.
   Note: Collars, bells, fittings, or couplings shall not be within 18-inches of the outer dimension of the tapping saddle.
6. Potential conflicts with existing utilities.

B. To facilitate the proposed connection and allow for slight adjustments in alignment, the Contractor shall leave a minimum 10' gap between the new pipe installation and the proposed connection point at the existing water main. The Contractor shall leave a gap longer than 10' if conditions warrant, or if directed by the Engineer.

C. The new pipeline shall have successfully passed pressure testing in accordance with Section 15044 and disinfection and bacteriological testing in accordance with Section 15041 prior to proceeding with the connection to the existing pipeline.

D. After the City Engineer has given approval to proceed with the connection, the Contractor shall schedule with the City for the wet tap or cut-in installation.

1. Shutdowns will be scheduled at the convenience of the City. Shutdowns may be scheduled for nights or weekends if required.

2. The Contractor shall give the City a minimum of 5 working days notice prior to any proposed excavation or shutdown of existing mains or services. Scheduling shall be subject to approval by the City Engineer.

3. The City may postpone or reschedule any shutdown operation if, for any reason, the City Engineer believes that the Contractor is improperly prepared with competent personnel, equipment, or materials to proceed with the connection.

4. If progress in completing the connection within the time specified is inadequate, the Engineer may order necessary corrective measures. Corrective measures may consist of directing City personnel or another contractor to complete the work. All costs for corrective measures shall be borne by the Contractor.

E. Contractor may proceed with excavation only after potholing has been completed, materials have been approved and delivered, and wet tap or cut-in installation has been scheduled with approved Connection Permit.

1. The Contractor shall saw-cut pavement, excavate and provide and install shoring and steel plating, when necessary, one day prior to the wet tap or cut-in installation.

2. The Contractor shall provide lights, barricades and traffic control in accordance with the agency of jurisdiction and as deemed necessary for the excavation by the Engineer.

3. The Contractor shall de-water existing mains in full compliance with NPDES standards where cut-in installations are required and shall be done in the presence of the Engineer and in accordance with Section 15041. Only City personnel are authorized to operate existing valves. The Contractor shall be responsible for any and all damage resulting from unauthorized operation of existing City facilities.

4. The Contractor under the inspection of the City shall perform the following work for wet taps and cut-in installations:

   a. Wet taps: Disinfect and install and tapping saddle and tapping valve and perform tapping operations.

   b. Cut-ins: Cut and remove portions of existing mains, and disinfect and install tees, valves, couplings, and appurtenances required to complete the closure. The Contractor shall discard pipe and appurtenances removed from service in accordance with this Section.

5. After the Contractor has performed tapping or cut-in operations, and the Engineer has given approval to proceed, the Contractor shall complete the installation as shown on the Approved Plans in accordance with the Standard Specifications including, but not limited to:

   a. Disinfecting and installing the pipe section(s) necessary to make the closure to the new system.

   b. Installing and setting the valve gate well(s) in accordance with the Standard Drawings.

   c. Installing thrust and anchor blocks in accordance with Section 03000.

   d. Completing all backfill and compaction of the trench in accordance with Section 02223.

   e. Repairing or replacing pavement as necessary.

3.3 FLEXIBLE PIPE COUPLINGS

Flexible pipe couplings shall be installed in accordance with the manufacturers recommendations and as described below:

A. Use plain-end pipe with flexible couplings per AWWA C200. Provide joint harnesses per AWWA M11 for aboveground applications or where indicated on the Approved Plans.

B. Flexible couplings may be used only where indicated on the drawings.

C. Clean oil, scale, rust, and dirt from the pipe ends and touch-up the epoxy coating and allow time for curing before installing the coupling. Clean the gaskets before installing.

D. Follow the manufacturer's recommendation for installation and bolt torque using a properly calibrated torque wrench.

E. Lubricate the bolt threads with graphite prior to installation.

3.4 GROOVED-END OR SHOULDERED COUPLINGS FOR DUCTILE IRON OR STEEL PIPE

Grooved-end or shouldered couplings shall be installed in accordance with the manufacturer's recommendations and as described below:

A. Grooved-end or shouldered joint couplings shall be installed per AWWA C606 and the manufacturer's recommendations.

B. Clean loose scale, rust, oil, grease, and dirt from the pipe or fitting groove and touch-up the epoxy coating as necessary, allowing time for curing before installing the coupling.

C. Clean the gasket before installation. Apply a lubricant selected from the Approved Materials List to the gasket exterior including lips, pipe ends, and housing interiors.

D. Fasten the coupling alternately and evenly until the coupling halves are seated. Follow the manufacturer's recommendation for bolt torque using a properly calibrated torque wrench.

3.5 JOINT RESTRAINT SYSTEM

Joint Restraint Systems shall be installed in accordance with the manufacturers recommendations and as described below:

A. Length of pipe to be restrained on each side of bends, tees, reducers and other fittings shall be determined by the Private Engineer or manufacturer of the restraint device and approved by the City Engineer.

B. Split ring restraint shall be installed on the spigot end of pipe, connected to a back-up ring which seats behind the bell of the adjoining pipe or fitting.

C. Restraint devices can be installed prior to lowering pipe into the trench.

D. Splined gaskets, also known as joint restraint gaskets, shall be installed in accordance with the manufacturer's recommendations.

3.6 BOLTS AND NUTS

A. All bolts and nuts shall be new and unused.

B. Bolts and nuts shall be cleaned, if needed, by wire brushing and lubricated prior to assembly.

C. Tighten nuts uniformly and progressively.

D. Buried bolts and nuts shall be coated with wax tape in accordance with Section 09902 prior to being encased with polyethylene.

E. All stainless steel bolts shall be coated with an anti-seize compound selected from the Approved Materials List.

F. Bolts and nuts shall not be reused once tightened. Used bolts and nuts shall be discarded and removed from the job.

3.7 POLYETHYLENE ENCASEMENT

A. Polyethylene encasement shall completely encase and cover all buried metal surfaces not otherwise protected with a cathodic protection system. All bolted connections shall be coated with wax tape prior to polyethylene encasement.

Pipe & Fittings: All ductile-iron pipe and fittings shall be encased with polyethylene sleeves in accordance with Method A described in AWWA C105, except that tees may be encased with polyethylene wrap in accordance with Method C described in AWWA C105.

Valves: Buried valves shall have only the stem and operating nut exposed and the wrap shall be attached so that valve operation will not disturb the wrapping or break the seal. Refer to the applicable valve specification to determine other coating requirements.

B. Polyethylene sleeves shall be secured with polyethylene or vinyl adhesive tape or plastic tie straps at the ends and quarter points along the sleeve in a manner that will hold the sleeve securely in place during backfill. Polyethylene wrap shall be secured with polyethylene or vinyl adhesive tape in a manner that will hold the wrap securely in place during backfill.

3.8 WARNING/IDENTIFICATION TAPE

Warning/Identification Tape shall be installed as described below in accordance with the Standard Drawings.

A. Tape shall be placed at the top of the pipe zone 12" above and centered over the utility intended for identification. Tape used with onsite potable and recycled water irrigation systems shall be installed at 6" above the pipe.

B. Tape shall be installed with the printed side up and run continuously along the entire length of the utility intended for identification. Tape shall be installed on the main piping and all appurtenant laterals, including blowoffs, air valve assemblies, fire hydrants, and services. Tape splices shall overlap a minimum of 24" for continuous coverage.

C. Tape shall be installed prior to placement of the Trench Zone Backfill.

3.9 GATE WELLS AND VALVE STEM EXTENSIONS

Gate wells shall be installed as shown on the Standard Drawings and as described below:

A. Gate wells shall be installed as shown on the Standard Drawings and as described below:

B. The top exterior portion of the gate well lid and ring shall be coated in accordance with Section 09900.

C. Valve Stem Extensions shall be installed when the valve operating nut is more than 5' below grade. Stem extensions shall be of sufficient length to bring the operating nut to a point between 12" and 18" below the gate well lid. Valve stem extensions shall be installed in accordance with the Standard Drawings.

3.10 METER BOX INSTALLATION

Meter boxes shall be installed at the elevations and locations shown on the Approved Plans and in accordance with the Standard Drawings. Near the completion of the project, a final meter box adjustment to finish grade may be required. Water meters shall not be installed until final adjustments are made to the meter box and approved by the City.

3.11 ABANDONMENT OR REMOVAL FROM SERVICE OF EXISTING FACILITIES

Before excavating for new mains that are to replace existing pipes or services, the Contractor shall make provisions for the continuation and maintenance of service to customers as directed by the City Engineer.

Abandonment or removal from service of existing mains, appurtenances or water services shown on the Approved Plans or as called for by the City Engineer shall be as directed by the City Engineer.

Abandonment or removal from service of existing mains, appurtenances or water services shown on the Approved Plans or as called for by the City Engineer shall be as indicated below and in accordance with the Standard Drawings:

A. Abandonment in place:

1. Existing pipe 4" and smaller shall have a short section of pipe removed and pipe ends encased in concrete.

2. Existing pipe 6" through 14" shall be cut and plugged with concrete or shall be pressure-grouted at intervals of 200' as recommended by the Engineer.

3. Existing pipe 16" and larger shall be entirely filled by pressure-grouting or by blown sand as determined by the Engineer.

4. Existing pipe ends shall be filled with concrete.

5. All valves shall be removed with remaining pipe or fittings permanently sealed with blind flange or concrete plug.

6. Gate wells shall be cut 24" below grade and filled with 1-2 slurry sack concrete or removed and replaced with compacted backfill.

7. Water service corporation stops shall be closed. Meter boxes and curb stops shall be removed. Service laterals shall be cut back a minimum of 24-inches below the finish grade.

8. Water services to be abandoned that are connected to pipelines that will remain in service shall be abandoned in-place.

B. Removal by excavation:

1. Existing pipe and appurtenances shall be removed from the ground as indicated on the Approved Plans or as directed by the City Engineer.

2. Contractor shall provide measures that allow for the removal of existing sewer mains and appurtenances with no leakage of raw sewage. Transportation of sewer mains and appurtenances removed from service shall be in waterproof trucks to prevent raw sewage from leaking on public streets.

3. Removal of asbestos-cement pipe (ACP) and sewer mains and appurtenances shall be in accordance with all applicable State and Federal requirements. Legal disposal is the responsibility of the Contractor. Obtain approval from the agency having disposal jurisdiction with respect to disposal sites.

4. Backfill, compaction, and surface repair of all excavations for removal of pipe and appurtenances shall be made in accordance with the Approved Plans, Section 02223 of the Standard Specifications, and the Standard Drawings.

3.12 SALVAGE

When the Contractor is required to remove existing pipe and appurtenances, or portions thereof, from the ground, such material may, at the discretion of the Engineer, be considered salvage. All materials identified as salvage are considered property of the City.

A. The Contractor shall remove and temporarily stockpile all materials identified as salvage in a safe location that will not disrupt traffic or shall deliver salvage to the City's Field Operations Yard as directed by the City Engineer.

B. The Contractor shall legally dispose of all other materials in an appropriate manner. Disposal is the responsibility of the Contractor. Obtain concurrence from the agency having disposal jurisdiction with respect to disposal sites and transportation methods.

3.13 RECONNECTIONS

A. The Contractor may encounter unused service laterals or appurtenant piping connected to an existing pipeline being replaced. Laterals and appurtenance piping that will not be connected to the new pipeline shall be abandoned as described in section 3.11.

B. Existing service laterals or appurtenances to be connected to new pipelines shall be installed as shown on the Approved Plans or as directed by the City Engineer in accordance with the Standard Drawings.

END OF SECTION

SECTION 15041 DISINFECTION OF PIPING

PART 1 GENERAL

1.1 DESCRIPTION

This section describes requirements for disinfection by chlorination of potable and recycled water mains, services, pipe appurtenances and connections.

1.2 REFERENCED STANDARDS

The publications listed below form part of this specification to the extent referenced and are referred to in the text by the basic designation only. Reference shall be made to the latest edition of said standards unless otherwise called for.

A. American Water Works Association (AWWA).
B300 Standard for Hypochlorites
B301 Standard for Liquid Chlorine
C651 Disinfecting Water Mains

1.3 RELATED WORK SPECIFIED ELSEWHERE

CMWD Standard Specifications 15000, 15044, 15056, 15057, 15061, and 15064

1.4 SERVICE APPLICATION

A. All water mains and appurtenances taken out of service for inspection, repairs, or other activity that might lead to contamination shall be disinfected before they are returned to service.

B. All new water mains and temporary high lines shall be disinfected prior to connection to the City's existing system.

C. All components incorporated into a connection to the City's existing system shall be disinfected prior to installation.

1.5 SUBMITTALS

A. A written disinfection and dechlorination plan signed by a certified chlorinator shall be submitted to the Engineer for review and approval prior to starting disinfection or dechlorination operations. Plan for disinfection method and procedure shall include equipment used to inject the chlorine solution, gauges or scales to measure the rate at which chlorine is injected, qualifications of personnel, testing location and schedule, source of water and water disposal locations. Personnel performing the disinfection shall demonstrate a minimum of five years experience in the chlorination and dechlorination of pipelines.

B. Qualification of certified testing laboratory.

C. Four copies of bacteriological test results to the Engineer upon completion of each test.

D. Emergency Response Plan.

1. 6 DELIVERY, STORAGE AND HANDLING

Chlorination and dechlorination shall be performed by competent individuals knowledgeable and experienced in the operation of the necessary application and safety equipment in accordance with applicable Federal, State and Local laws and regulations. The transport, storage and handling of these materials shall be performed in accordance with Code of Federal Regulations (CFR) 1910.120 Hazardous Waste Operations and Emergency Response, CFR 49.172 Hazardous Materials Regulations, and the General Industry Safety Orders of the California Code of Regulations, Title 8, Section 5194.

1.7 CONCURRENT DISINFECTION AND HYDROSTATIC TESTING

The specified disinfection of the pipelines may be performed concurrently with the hydrostatic testing in accordance with Section 15044. In the event repairs are necessary, as indicated by the hydrostatic test, additional disinfection may be required by the Engineer in accordance with this specification.

1.8 CONNECTION TO EXISTING MAINS

Prior to connection to existing mains, disinfection and bacteriological testing shall be performed in accordance with this specification, and hydrostatic testing shall be performed per Section 15044. A City Connection Permit is required authorizing connection to an existing system shall and be given only on the basis of acceptable hydrostatic, disinfection and bacteriological test results. Connection to existing mains shall be performed in accordance with Section 15000.

PART 2 MATERIALS

2.1 CHLORINE (GAS)

A. Liquid chlorine contains 100-percent available chlorine and is packaged in steel containers in net weights of 68.1kg (150 lb.) or 907.2kg (1 ton).

B. Liquid chlorine shall be used with appropriate gas flow chlorinators, heaters, and injectors to provide a controlled, high-concentration solution feed to the water. The chlorinators and injectors shall be the vacuum-operated type.

2.2 SODIUM HYPOCHLORITE (LIQUID)

Sodium hypochlorite is available in liquid form in glass or plastic containers, ranging in size from 0.95 L (1 Qt.) to 18.93 L (5 Gal.). The solution contains approximately 10% to 15% available chlorine.

2.3 TABLET OR GRANULAR HYPOCHLORITE

Tablet or granular hypochlorite may be used if a solution container is utilized to provide a continuous feed method.

PART 3 EXECUTION

3.1 GENERAL

A. Disinfection of pipelines shall not proceed until all appurtenances and any necessary sample ports have been installed and the Engineer provides authorization.

B. Every effort shall be made to keep the water main and its appurtenances clean and dry during the installation process.

C. All piping, valves, fittings, and appurtenances which become contaminated during installation shall be cleaned, rinsed with potable water, and then sprayed or swabbed with a 5 percent sodium hypochlorite disinfecting solution prior to installation.

D. Water mains under construction that become flooded by storm water, runoff, or groundwater shall be cleaned by draining and flushing with metered potable water until clear water is evident. Upon completion, the entire main shall be disinfected using a method approved by the Engineer.

3.2 METHODS

A. Chlorine (Gas)

1. Only vacuum-operated equipment shall be used. Direct-feed chlorinators, which operate solely from gas pressure in the chlorine cylinder, shall not be permitted. The equipment shall incorporate a backflow prevention device at the point of connection to the potable water source used to fill the line being tested.

2. The chlorinating agent shall be applied at the beginning of the system to be chlorinated and shall be injected through a corporation stop, a hydrant, or other approved connection to ensure treatment of the entire system being disinfected.

3. Only a certified, licensed chlorination and testing contractor shall perform gas chlorination work. The chlorination contractor must also possess a Grade II Treatment Plant Operator Certification from the State of California if required by the Engineer.

B. Sodium Hypochlorite Solution (Liquid)

1. Sodium hypochlorite solution shall be used for cleaning and swabbing piping and appurtenances immediately prior to installation and for disinfecting all components of connections to the City's existing system.

2. Sodium hypochlorite solution may be used for the initial disinfection of newly installed water mains. The solution shall be applied at a terminus of the system to be chlorinated using an injector which can adjust the amount of solution being injected into the piping system. The solution shall be injected in the appropriate concentration to achieve the specified concentration range of chlorine throughout the entire piping system. Where pumping equipment is used in conjunction with an injector, an integral backflow prevention device shall be used and connected to the potable water supply.

3. Water trucks, pumping equipment, piping, appurtenances and all other equipment in contact with potable water shall be disinfected prior to use.

4. Sodium hypochlorite solution may also be used to increase the total chlorine residual if the concentration from the initial chlorination of the system is found to be low. The solution shall be added to the system in sufficient amounts at appropriate locations to ensure that the disinfecting solution is present at a concentration within the specified range throughout the piping system.

3.3 PROCEDURE FOR DISINFECTING WATER MAINS AND APPURTENANCES

A. The pipeline shall be filled at a rate not to exceed 1,135 liters per minute (300 GPM) or a velocity of 0.3m per second (1 foot per second), whichever is less.

B. Disinfection shall result in a total chlorine concentration of not less than 25-mg/l. This concentration shall be evenly distributed throughout the system to be disinfected, using a continuous feed method of chlorination.

C. All valves shall be operated with the disinfection solution present in the pipeline. All appurtenances such as air-vacuum relief valves, blowoffs, hydrants, backflow prevention devices, and water service laterals shall be flushed with the treated water a sufficient length of time to ensure a chlorine concentration within the specified range in all components of each appurtenance. (Note the limitations for discharge of chlorinated water outlined below.)

D. The Engineer will verify the presence of the disinfection solution throughout the system by sampling and testing for acceptable chlorine concentrations at the various appurtenances and/or at the test ports provided by the Contractor. Areas of the system found to be below the specified chlorine concentration level shall receive additional flushing as noted above and/or additional disinfection solution as necessary. (Note the limitations for discharge of chlorinated water outlined below.) Addition of disinfection solution after the initial charging of the line shall be made by either the liquid chlorine (gas) method, or the sodium hypochlorite method as directed by the Engineer.

E. The chlorinated water shall be retained in the system for a minimum of 24 hours. The City Engineer will test the total chlorine residual. The system shall contain a total chlorine residual of not less than 80% of the initial total chlorine residual before the 24-hour soaking period began. If the total chlorine residual has decreased more than 20%, the system shall be soaked for an additional 24-hour period. If the total chlorine residual has not deceased after this additional 24-hour period, the system shall be flushed in accordance with the procedure detailed herein. If the total chlorine residual has decreased, the system shall be flushed in accordance with the procedure detailed herein, and shall be re-disinfected.

F. Following a successful retention period as determined by the City Engineer, the chlorinated water shall be flushed from the system at its extremities and at each appurtenance, using potable water from a source designated by the City Engineer. The minimum water velocity during flushing shall be 0.9 meters per second (3 feet per second) or as directed by the Engineer. Flushing shall continue until the replacement water in the new system is equal in chlorine residual to the potable source of supply as verified by the City. (Note the limitations for discharge of chlorinated water outlined below.)

G. The Contractor shall contract with a State certified sampling laboratory to perform sampling, transport samples and perform bacteriological sampling and testing as specified herein.

3.4 DISCHARGE OF CHLORINATED WATER

A. Indiscriminate onsite disposal or discharge to sewer systems, storm drains, drainage courses or surface waters of chlorinated water is prohibited.

B. In locations where chlorine neutralization is required, the reducing agent shall be applied to the water as it exits the piping system. The Developer shall monitor the chlorine residual during the discharge operations. Total residual chlorine limits in these locations, and for the discharge of chlorinated water from the testing of pipelines to surface waters of the San Diego Region are as follows:

Total Residual Chlorine Effluent Limitations

30-Day Average	-	0.002 mg/l
Average Daily Maximum	-	0.008 mg/l
Instantaneous Maximum	-	0.02 mg/l

The various methods of dechlorination available can remove residual chlorine to concentrations below standard analytical methods of detection, 0.02 mg/l, which will assure compliance with the effluent limit. The Developer will perform all necessary tests, keeping and providing records to the Engineer to ensure that the total residual chlorine effluent limitations listed above are met.

C. In locations where no hazard to the environment is evident based on the joint examination described above, the chlorinated water may be broadcast for dust control on the surface of the immediate site. Care shall be exercised in broadcasting the water to prevent runoff.

3.5 BACTERIOLOGICAL TESTING

The Contractor shall employ a State certified laboratory to perform bacteriological sampling and testing of all new system installations. The testing methodology employed by the City shall be as set forth in "Standard Methods for the Examination of Water and Waste Water" (current edition). Testing requirements are as set forth in the California Domestic Water Quality and Monitoring Regulations and commensurate with current requirements for surface water testing. The testing laboratory will analyze the samples for the presence of coliform bacteria and heterotrophic-type bacteria (heterotrophic plate count). The evaluation criteria employed by the City for a passing test sample is as follows:

A. Coliform bacteria: no positive sample, and

B. Heterotrophic plate count (HPC): 500 colony forming units/ml or less.

3.06 REDISINFECTION

If the initial disinfection fails to produce satisfactory bacteriological test results, the pipeline system shall be re-flushed and re-sampled. If the second set of samples does not produce satisfactory results, the pipeline system shall be re-chlorinated, flushed, and re-stamped. The chlorination, flushing, and sampling procedure shall continue until satisfactory results are obtained. Re-disinfection and retesting shall be at the Contractor's expense.

3.07 DISINFECTING TIE-INS AND CONNECTIONS

Pipes, fittings, valves and all other components incorporated into connections with the City's existing system shall be spray disinfected or swabbed with a liquid chlorine solution in accordance with AWWA C651 and as specified herein. Upon connection to the main, the line shall be flushed as directed by the City Engineer. Disinfection by this method is generally limited to assemblies of 20' or less in length. Alternate methods such as "predisinfection" prior to installation in accordance with AWWA C651 may be required at the discretion of the City Engineer.

END OF SECTION

SECTION 15043 TESTING OF GRAVITY SEWER PIPELINES

PART 1 - GENERAL

1.1 DESCRIPTION

A. The CONTRACTOR shall furnish all tools, equipment, materials, and supplies and shall perform all labor required to complete the work as indicated on the Drawings and specified herein.

B. This Section covers the performance of all pipeline flushing and testing, complete, for sanitary sewer system piping as specified herein and in accordance with the requirements of the Contract Documents.

1.2 RELATED WORK SPECIFIED ELSEWHERE

A. Polyvinyl Chloride (PVC) Gravity Sewer Pipe: 15063

1.3 REFERENCE SPECIFICATIONS, CODES AND STANDARDS

A. Comply with the applicable reference specifications as specified in the GENERAL PROVISIONS.

1.4 CONTRACTOR SUBMITTALS

A. Submittals shall be made in accordance with the GENERAL PROVISIONS.

B. The CONTRACTOR shall submit in writing all proposed plans for testing, and for water conveyance, control and disposal. The CONTRACTOR shall also submit written notice 48 hours in advance of the proposed testing schedule for review and concurrence of the ENGINEER.

1.5 QUALITY ASSURANCE (NOT USED)

PART 2 – PRODUCTS

2.1 GENERAL

A. Temporary valves, plugs, bulkheads, and other air pressure testing and water control equipment and materials shall be provided by the CONTRACTOR subject to the ENGINEER's review. No materials shall be used which will be injurious to pipeline structure and future function. Air test gages shall be laboratory-calibrated annually. At the discretion of the City Engineer, gages shall be recalibrated by a certified laboratory at the CONTRACTOR's expense prior to the leakage test.

PART 3 – EXECUTION

3.1 GENERAL

A. Unless otherwise specified, water for testing will be furnished by the CONTRACTOR; and, the CONTRACTOR shall make all necessary provisions for conveying the water from the AGENCY-designated source to the points of use.

B. Release of water from pipelines, after testing has been completed, shall be performed as directed by the ENGINEER.

C. All testing operations shall be performed in the presence of the INSPECTOR.

3.2 SEWER PIPE CLEANING

A. All sewer pipe shall be thoroughly flushed with clean water, from access-hole to access-hole with an appropriately sized inflatable ball.

B. All construction debris and water shall be removed from each access-hole prior to removal of expandable plugs.

C. Water used in flushing the new sewer mains and laterals shall not be discharged into the existing sewer system.

3.3 TESTING OF PIPELINE

A. General: All gravity sewer pipes and service laterals shall be tested for exfiltration and/or infiltration and deflection, as specified. Sewer pipelines shall be backfilled prior to testing. All leakage tests of sanitary sewer systems shall be in conformance with SSPWC Section 306-1.4.1.

B. Water Exfiltration Test shall be in conformance with SSPWC Section 306-1.4.2.

C. Water Infiltration Test shall be in conformance with SSPWC Section 306-1.4.3. Unless otherwise specified, infiltration will be measured by the CONTRACTOR using measuring devices approved by the ENGINEER.

D. Air Pressure Test shall be in conformance with SSPWC Section 306-1.4.4.

E. At the CONTRACTOR's option, joints may be air tested individually, joint by joint, with the use of specialized equipment. The CONTRACTOR shall submit its joint testing procedure for the ENGINEER's review and approval prior to testing. Prior to each test, the pipe at the joint shall be wetted with water. The maximum test pressure shall be 3.0 psi. The minimum allowable pressure drop shall be 1.0 psi over a 30-second test period.

F. Water Pressure Test shall be in conformance with SSPWC Section 306-1.4.5.

G. Deflection Test: All flexible and semi-rigid main line pipe shall be tested in accordance with SSPWC Sections 306-1.2.12 and 306-1.2.13 for deflection, joint displacement, or any other obstruction by passing a rigid mandrel through the pipe by hand, not less than 30 days after completion of the trench backfill, but prior to permanent resurfacing. The mandrel shall be a full circle, solid cylinder, or a rigid, non-adjustable, odd-numbered leg (9 leg minimum) steel cylinder, accepted by the ENGINEER as to design and manufacture. The circular cross section of the mandrel shall have a diameter of at least 95 percent of the specified average inside diameter of the pipe and the minimum length of the circular portion of the mandrel shall be equal to the nominal diameter of the pipe. Obstructions encountered by the mandrel shall be corrected by the CONTRACTOR.

3.4 CLOSED CIRCUIT TELEVISION INSPECTION

A. A closed circuit television inspection shall ne conducted of new sewer lines after sewer pipe cleaning and mandrel testing.

B. Closed circuit television inspections shall be performed in accordance with the SSPWC, 500-1.1.5. Video documentation shall be provided in digital format (DVD).

C. All defects and evidence of reverse slope by ponding of water or dips in pipe alignment revealed by the closed circuit television inspection shall be repaired to the satisfaction of the City Engineer at the Contractor's expense.

END OF SECTION

SECTION 15044 – HYDROSTATIC TESTING OF PRESSURE PIPELINES

PART 1 GENERAL

1.1 DESCRIPTION

This section describes the requirements and procedures for pressure and leakage testing of all pressure mains.

1.2 RELATED WORK SPECIFIED ELSEWHERE

CMWD Standard Drawings
CMWD Standard Specifications 15000, 15041, 15056, 15061, and 15064

1.3 REQUIREMENTS PRIOR TO TESTING

A. Provide testing procedure submittal including testing pressure, testing schedule, test bulkhead locations, and water supply details.

B. All piping, valves, fire hydrants, services, and related appurtenances shall be installed prior to testing.

C. The pipe trench shall have trench zone backfill placed and compacted with a minimum of 2.5' of material over the pipe.

D. All concrete anchor blocks shall be allowed to cure a sufficient time to develop a minimum strength of 13.79 MPa (2,000 psi) before testing.

E. Pressure tests on exposed and aboveground piping shall be conducted only after the entire piping system has been installed and attached to pipe supports, hangers or anchors as shown on the Approved Plans.

F. Steel pipelines shall not be tested before the mortar lining and coating on all pipe lengths within the line have been in place for a minimum of fourteen (14) days. Cement-mortar lined pipe shall not be filled with water until a minimum of eight hours has elapsed after the last joint has been mortared.

1.4 CONCURRENT HYDROSTATIC TESTING AND DISINFECTION OF PIPELINES

Hydrostatic testing of pipelines shall be performed prior to or concurrently with the disinfection operations in accordance with Section 15041. In the event repairs are necessary, as indicated by the hydrostatic test, the City may require additional disinfection in accordance with Section 15041.

1.5 CONNECTION TO EXISTING MAINS

Hydrostatic testing shall be performed prior to connections to existing mains. A City Connection Permit authorizing connection to the existing system shall be given only on the basis of acceptable hydrostatic, disinfection and bacteriological test results. Connection to existing mains shall be performed in accordance with Section 15000.

PART 2 MATERIALS

2.1 WATER

A. Potable water shall be used for hydrostatic testing of potable and recycled water mains.

B. Potable water shall be supplied by a City-approved source. Make-up water for testing shall also be potable water.

C. A chlorinated water solution, in accordance with Section 15041, shall be used to charge the line and for make-up water when hydrostatic testing and disinfection operations are combined.

D. Meet all applicable state and local requirements for disposal of testing water.

2.2 CONNECTIONS

A. Testing water shall be supplied through a metered connection equipped with a backflow prevention device in accordance with Section 15112 at the point of connection to the potable water source used.

B. The Contractor shall provide any temporary piping needed to deliver potable water to the piping that is to be tested. Temporary piping shall be in accordance with Section 15000.

PART 3 EXECUTION

3.1 GENERAL

A. All water systems shall be pre-tested to insure passage of test prior to scheduling official test with inspector.

B. The Contractor shall provide the City with a minimum of 48 hours' notice prior to the requested date and time for hydrostatic tests.

C. The Contractor shall furnish all labor, materials, tools, and equipment for testing.

D. Temporary blocking during the tests will be permitted only at temporary plugs, caps or where otherwise directed by the City.

E. All valves and appurtenances shall be operated during the test period. The test shall be conducted with valves in the open position. The Contractor is not permitted to operate any valves on the City's system.

F. At the onset of testing, all valves, air vacuum assemblies, blowoffs, and services shall be monitored for possible leakage and repairs made, if necessary, before the test proceeds. The appurtenances shall be monitored through the duration of the testing.

G. For pipe with porous lining, such as cement mortar, the pipe shall be filled with water and placed under a slight pressure for a minimum of forty-eight (48) hours prior to the actual hydrostatic test.

H. Testing shall be made before connecting the new line with the existing City pipes and mains.

I. The pipeline should be filled at a rate such that the velocity of flow is less than 1 fps.

J. Maximum length of pipe to be included in any one (1) test shall not exceed 2,500 linear feet or vertical elevation difference of 58 feet.

3.2 FIELD TEST PROCEDURE

A. Before applying the specified test pressure, care shall be taken to release all air within the pipe and appurtenances to be tested. Air shall be released through services, fire hydrants, air release valves, or other approved locations.

B. The leakage shall be considered as the total amount of water pumped into the pipeline during the test period.

C. Apply and maintain the test pressure by means of a hydraulic force pump.

D. Maintain the test pressure for the following duration by restoring it whenever it falls an amount of 5 psi:

Pipe Diameter (inches)	Hours
18 and less	4
20 to 36	8
Greater than 36	24

E. After the test pressure is reached, use a meter to measure the additional water added to maintain the pressure. This amount of water is the loss due to leakage in the piping system. The allowable leakage for various sizes of PUC & DIP with rubber gaskets are shown in the following table:

TYPE OF PIPE: P.V.C. & D.I.P.
CLASSES: 150 & 200

Pipe Sizes (inches)	Allowable Leakage Gals/4 hrs/1000' of pipe
4"	.33 Gals
6"	.50 Gals
8"	.66 Gals
10"	.83 Gals.
12"	.99 Gals.
14"	1.16 Gals.
16"	1.32 Gals.
18"	1.49 Gals.
20"	1.66 Gals.
24"	1.98 Gals.

F. The allowable leakage for welded steel pipe shall be zero gallons.

G. The allowable leakage for piping having threaded, brazed, or welded (including solvent welded) joints shall be zero gallons.

H. Repair and retest any pipes showing leakage rates greater than that allowed in the above criteria.

3.3 TEST PRESSURE

Pipe sizes in excess of 16” diameter shall be tested at a pressure based on test pressure as shown on the drawings. If no test pressure is shown, the pipeline at the low point in test section shall be pumped to a hydrostatic test pressure of 125 percent of the operating pressure or pipe class, whichever is the greater. Pressure shall be maintained for a duration shown in section 3.2 and shall be repumped when it falls an amount of 5 p.s.i.

Pipe sizes 16” diameter and less shall be tested at 75 p.s.i. in excess to the operating pressure of the pipeline. Pressure shall be maintained for a duration shown in section 3.2 and shall be repumped when it falls an amount of 5 p.s.i.

The test pump gauge and meter shall be connected to the water main at a location other than the highest point in the line, in order to allow release of air from the high point. Means shall be provided for accurately measuring the quantity of water pumped through a meter and pumped into the pipe immediately, during and after the test period in order to maintain or restore the initial test pressure. All pipe, fittings, valves, services and appurtenances shall be subjected to the hydrostatic test and irrespective of the measured quantity of leakage, all detectable leaks shall be repaired by the Contractor at the contractor’s expense and no cost to Carlsbad Municipal Water District.

If a tested system is damaged or a leak occurs after official test the entire system or portion of system will be retested as directed by Inspector.

END OF SECTION

SECTION 15056 DUCTILE-IRON PIPE AND FITTINGS

PART 1 GENERAL

1.1 DESCRIPTION

This section includes materials and installation of ductile-iron pipe and fittings for potable water systems.

1.2 REFERENCE STANDARDS

The publications listed below form part of this specification to the extent referenced and are referred to in the text by the basic designation only. Reference shall be made to the latest edition of said standards unless otherwise called for.

ANSI B16.42	Ductile iron pipe flanges and flanged fittings, classes 150 and 300.
ASTM A536	Specification for ductile iron castings.
AWWA C104	Cement mortar lining for ductile iron pipe and fittings for water
AWWA C105	Polyethylene encasement for ductile iron pipe systems
AWWA C111	Rubber-gasket joints for ductile iron pipe
AWWA C600	Installation of ductile iron water mains and their appurtenances

1.3 RELATED WORK SPECIFIED ELSEWHERE

CMWD Standard Drawings
CMWD Standard Specifications 09900, 15000, 15044, 15061, 15064, 15108, and 15112

1.4 SERVICE APPLICATION

Ductile-iron pipe shall be used only in specific areas, locations, and uses allowed by the City.

1.5 DESIGN REQUIREMENTS

A. General:

1. Ductile-iron pipe and fittings shall be manufactured per AWWA C110, C111, C115, C150, C151, and C153. Gray-iron and cast-iron fittings or flanges shall not be used.

2. Ductile-iron fittings manufactured per AWWA C153 shall be installed on mains 12" and smaller only.

3. Joints for ductile-iron pipe and fittings shall be mechanical, flanged, or push-on in accordance with AWWA C110, C111, and C153.

4. Except as amended herein, or otherwise shown on the Approved Plans, joints for ductile-iron pipe and ductile-iron fittings shall have a pressure rating equal to or greater than the adjacent piping.

5. Joints in buried piping may be of the push-on, flanged or mechanical-joint type per AWWA C111 except where particularly specified on the Approved Drawings.

6. Joints that are aboveground, within structures, or submerged shall be flanged unless otherwise shown on the Approved Plans.

B. Unless otherwise specified, ductile-iron flanges shall be in accordance with AWWA C115, rated at a working pressure of 1,724 KPa (250 psi). Where required in order to connect to the flanges of 1,724 KPa (250 psi) butterfly valves, or as otherwise shown on the approved plans, ductile-iron flanges shall be compatible with AWWA C207, Class "F".

Maximum working pressure of flanges shall be as specified in AWWA or ASME/ANSI. Flanges shall be integrally cast per AWWA C110 or shop-threaded per AWWA C115. Flanges shall be solid. Hollow-back flanges are not permitted. Gray-iron or cast-iron flanges are not permitted. Threading of flanges in the field is not permitted.

Where threaded flanges are used, the pipe or spool piece to which they are connected will be hydrostatically tested in the presence of the Engineer prior to installation. The pipe section or spool piece shall be hydrostatically tested for 15 minutes at the pressure rating of the flanges. No leaks shall be permitted.

C. Plain ends shall conform to the requirement of AWWA C151 and to the dimensions included within AWWA C110 to accept a mechanical joint, push-on joint, flanged coupling adaptor, flexible coupling, or grooved coupling. Refer to Section 15000 for coupling descriptions.

D. The exterior surfaces of all pipe and fittings shall be factory coated with a minimum one-(1) mil thick petroleum asphaltic material per AWWA C110 and C151.

E. All pipe and fittings shall be cement-mortar lined in accordance with AWWA C104, using the double thickness requirements indicated in said standard. Type II or Type V Portland cement per ASTM C 150 shall be used.

1.6 QUALITY ASSURANCE

A. The manufacturer of each shipment of pipe shall be required to supply a statement certifying that each lot or load of pipe and fittings has been subjected to and met the tests specified for ductile-iron pipe and fittings per AWWA C110, C111, C115, C150, C151, and C153, as applicable.

B. All pipe shall have a home mark on the spigot end to indicate proper penetration when the joint is made.

C. Ductile-iron pipe shall bear indelible identification markings as required by AWWA C151.

1.7 SUBMITTALS

The following items shall be submitted and reviewed by the City prior to shipping of ductile-iron pipe and fittings:

A. An affidavit of compliance with AWWA C104, C110, C111, C115, C150, C151, C153, and the requirements of this specification.

B. Typical joint details.

C. Typical details and description of lining and coating.

D. Calculations supporting selected wall thickness.

E. Calculations demonstrating that each proposed restrained joint arrangement can resist the applied forces.

F. Cathodic protection materials.

1.8 DELIVERY, STORAGE, AND HANDLING

Delivery, storage, and handling of ductile-iron pipe and fittings shall follow the recommendations of AWWA C600 and as specified herein:

A. Handling of pipe shall be performed with lifts, cranes, or other suitable equipment and devices. Slings, hooks, or pipe tongs shall be padded and used in such a manner as to prevent damage to the pipe, linings, and coatings. The pipes shall not be dropped or dragged.

B. During transport, the pipe shall be supported and secured against movement using padded devices in such a manner to prevent damage.

C. Stored pipe shall be protected from damage and kept free from dirt and foreign materials by closing the ends of the pipe. Other pipeline materials shall be protected by appropriate packaging or wrapping. Gaskets shall be stored in a cool location out of direct sunlight. Bolts, nuts, and washers shall be handled and stored in a dry location in a manner that will ensure proper use with respect to types and sizes.

D. Pipe laid out for installation shall be placed on earth berms or timber cradles adjacent to the trench in the numerical order of installation.

E. Maintain plastic end caps on all pipe and fittings in good condition until the pipe is ready to be installed in the trench. Periodically open the plastic end caps and spray clean potable water inside the pipe for moisture control.

F. Under no circumstances shall ropes or other devices be attached through the fitting's interior for handling.

1.9 RECYCLED WATER IDENTIFICATION

Ductile-iron pipe and fittings for recycled water shall be identified with purple-colored coating, purple polyethylene sleeves, identification labels or signs in accordance with Section 15000.

1.10 CORROSION PROTECTION

Polyethylene encasement shall be installed on all buried ductile-iron pipe and fittings in accordance with Section 15000. Additionally, all buried ductile iron fittings with bolted connections (flanges, mechanical joints, etc) shall be coated with wax tape in accordance with Section 09902.

1.11 WARNING/IDENTIFICATION TAPE

Warning/Identification tape shall be installed for ductile-iron pipe and fittings in accordance with Section 15000.

PART 2 MATERIALS

2.1 DUCTILE-IRON

Ductile-iron pipe and appurtenant components and materials shall be selected from the Approved Materials List in accord with the Standard Drawings.

2.2 GASKETS

A. Mechanical joint rubber gasket configuration and materials shall comply with AWWA C111, and according to the applicable joint type and pressure rating of the piping system.

B. Flange gaskets shall be 1/8" thick acrylic or aramid fibers bound with nitrile for all sizes of pipe. Gaskets shall be full-face type with pre-punched holes. Ring gaskets extending to the inner edge of the bolt circumference may be used only upon approval of the City Engineer.

C. Push-on joint rubber gaskets shall be per AWWA C111.

D. If organic solvents or petroleum products are encountered during the course of the work, alternate gasket materials or joint treatment may be required by the Engineer.

2.3 BOLTS AND NUTS FOR FLANGES

Bolts and nuts shall be in accordance with Section 15000 and shall be selected from the Approved Materials List.

2.4 WAX TAPE COATING

Wax Tape shall be provided in accordance with Section 09902 and the Approved Materials List.

2.5 POLYETHYLENE ENCASEMENT

Polyethylene encasement shall be provided in accordance with Section 15000 and selected from the Approved Materials List.

2.6 WARNING/IDENTIFICATION TAPE

Warning/Identification tape materials shall be in accordance with Section 15000 and selected from the Approved Materials List.

PART 3 EXECUTION

3.1 GENERAL

At all times when the work of installing pipe is not in progress, including worker break times, ends of the pipe shall be closed with a vermin-proof and child-proof cap or plug. Do not permit trench water to enter the pipe. Do not place tools, clothing, or other materials in the pipe. The Contractor shall maintain the interior of the pipe in a sanitary condition free from foreign materials.

3.2 TRENCHING, BACKFILLING AND COMPACTING

Trenching, backfilling and compacting shall be performed in accordance with Section 02223.

3.3 DEWATERING

The Contractor shall provide and maintain at all times during construction ample means and devices to promptly remove and dispose of all water from any source entering trench excavations or other parts of the work. Any damage caused by flooding of the trench shall be the Contractor's responsibility.

Dewatering shall be performed by methods that will maintain a dry excavation, preservation of the final lines and grades and protection of all utilities. If flooding of the trench does occur, the Contractor shall immediately dewater and restore the trench. Damaged or altered pipeline appurtenances or trench materials shall be repaired or replaced as directed by the Engineer.

3.4 PIPE INSTALLATION

When the work requires and the size of the pipe allows entry of personnel into the pipe, the Contractor shall comply with all Federal and State regulations for confined space entry. Work inside pipelines shall not be undertaken until all the tests and safety provisions of the Code of Federal Regulations 1910.146, and the General Industry Safety Orders of the California Code of Regulations, Title 8, Section 5159 for confined space entry have been performed and the area is verified as safe to enter.

The Contractor shall furnish and install all pipe, specials, fittings, closure pieces, valves, supports, bolts, nuts, gaskets, jointing materials, and all other appurtenances as shown on the Approved Plans and as required to provide a complete and workable installation. Install pipe in the trench as follows:

A. Inspect each pipe and fitting before lowering the pipe or fitting into the trench. Inspect the interior and exterior protective coatings. Patch damaged areas in the field with material recommended by the protective coating manufacturer. Thoroughly clean the ends of the pipe. Remove foreign matter and dirt from inside of the pipe and keep pipe clean during and after installation.

B. Install pipe according to the manufacturer's approved order of installation. Install pipes uphill if the grade exceeds 10%. Lower the pipe onto the bedding at the proper lines and grades.

C. The manufacturer's printed installation guide outlining the radius of curvature that can be negotiated with pipe sections of various lengths shall be followed, except they shall not exceed the deflections allowed in AWWA C600 according to joint type. Combined deflections at rubber gasket or flexible coupling joints shall not exceed that recommended by the manufacturer.

D. The pipe shall have firm bearing along its full length, and bell holes shall be provided at each joint to permit visual inspection of the joint and prevent the pipe from being supported by the bell end or coupling.

E. Pipe Assembly:

1. Push-On Type: Assemble the pipe joint using a lubricant selected from the Approved Materials List. Insert the spigot end into the bell or coupling to the proper insertion mark. Check that the elastomeric ring has not left the groove during assembly by passing a feeler gauge around the completed joint. Drive spigot ends of the pipe into bell ends in accordance with the manufacturer's recommendations. Stabbing shall not be permitted.

2. Mechanical Joint Type: Assembly of mechanical joint fittings shall be in accordance with the manufacturer's recommendations regarding installation.

F. During installation operations, do not place tools, clothing, or other materials in the pipe.

G. When pipe installation is not in progress, including worker break times, ends of the pipe shall be closed with a vermin-proof and child-proof cap or plug. Do not permit trench water, animals, or foreign material to enter the pipe.

3.5 CORROSION PROTECTION

Polyethylene encasement shall be installed on all buried ductile-iron pipe and fittings in accordance with Section 15000. Additionally, all buried ductile iron fittings with bolted connections (flanges, mechanical joints, etc) shall be coated with wax tape in accordance with Section 09902.

3.6 FLANGED PIPE AND FITTINGS

Flanged connections shall be installed where indicated on the Approved Drawings.

A. Bolt holes shall straddle the horizontal and vertical centerlines.

B. The bolts, nuts and flange faces shall be thoroughly cleaned by wire brush prior to assembly.

C. Bolts and nuts shall be lubricated with a City-approved anti-seize compound.

D. Nuts shall be tightened in an alternating "star" pattern to the manufacturer's recommended torque.

E. Coat the exterior of exposed flanges, bolts and nuts located aboveground or within vaults in accordance with Section 09910.

3.7 MECHANICAL JOINT CONNECTIONS

A. Install mechanical joint connections per AWWA C600 and the manufacturer's recommendations.

B. Prior to installation of the mechanical joint, clean the socket and plain end of the pipe. Lubricate both the gasket and plain end of the pipe with an approved lubricant per AWWA C111 immediately prior to slipping the gasket onto the plain end of the pipe.

C. Tighten the bolts to the normal range of bolt torque per the manufacturer's recommendations and AWWA C600k, Table 3, as follows:

Pipe Diameter	Bolt Size	Range of Torque
3"	5/8"	61-81 N-M (45-60 ft.-lb.)
4-24"	3/4"	102-122 N-M (75-90 ft.-lb.)
30-36"	21"	136-163 N-M (100-120 ft.-lb.)

3.8 CROSSES

A. Each flanged ductile-iron cross shall be installed with flanged ductile-iron pipe spools between the cross and the valves. The spools are included to position the valves a sufficient distance from the cross to allow installation of the thrust blocks without conflicting with the valve actuators.

B. The spools shall be 18" long for pipe sizes 8" through 12", and 24" long for pipe sizes 16" and larger.

C. The spools shall be equal in class to the adjacent pipe.

3.9 JOINT BONDING AND CATHODIC PROTECTION

Bonding of joints to provide continuity, flange insulation kits, internal epoxy linings, and other cathodic protection items and materials shall be installed where shown on the Approved Plans in accordance with the Standard Drawings and Section 16640.

3.10 COUPLINGS FOR DUCTILE-IRON PIPE

Mechanical type flexible joints shall be installed where shown on the Approved Drawings. Grooved couplings shall be used in vaults and above ground. Flexible couplings may be used, where indicated on the drawings, below ground, but may also be used above ground with restrained joints. Flanged coupling adapters shall be used for buried pipelines, where allowed by the City.

A. Grooved joint couplings shall be installed per AWWA C606 and as indicated in Section 15000.

B. Flanged coupling adapters, where allowed by the City, shall be installed per the manufacturer's recommendations.

C. Flexible couplings shall be installed per Section 15000 and the manufacturer's recommendations.

D. All couplings for ductile-iron pipe shall be shop-coated in accordance with Section 15000.

3.11 CONCRETE

Concrete thrust and anchor blocks shall be installed in accordance with Section 03000 and the Standards Drawings.

3.12 WARNING/IDENTIFICATION TAPE

Warning/Identification tape shall be installed in accordance with Section 15000 and the Standard Drawings.

3.13 DISINFECTION AND BACTERIOLOGICAL TESTING

Disinfection, bacteriological testing, and flushing shall be performed in accordance with Section 15041.

3.14 HYDROSTATIC TESTING

Field hydrostatic testing shall be performed in accordance with Section 15044.

END OF SECTION

SECTION 15057 COPPER TUBING, BRASS AND BRONZE PIPE FITTINGS

PART 1 GENERAL

1.1 DESCRIPTION

This section includes materials and installation of copper tubing, brass and bronze pipe fittings and appurtenances.

1.2 REFERENCE STANDARDS

The publications listed below form part of this specification to the extent referenced and are referred to in the text by the basic designation only. Reference shall be made to the latest edition of said standards unless otherwise called for.

ANSI B1.20.1 Pipe treads, general purpose
ANSI B16.18 Case copper alloy solder joint pressure fittings

1.3 RELATED WORK SPECIFIED ELSEWHERE

CMWD Standard Drawings
CMWD Standard Specifications 09900, 15000, 15041, 15044, 15056, 15061 and 15064

1.4 SERVICE LATERAL WET TAP CONNECTIONS

Contractor shall perform all wet tap connections to existing pipelines in accordance with Section 15000.

1.5 RECYCLED WATER IDENTIFICATION

Copper Tubing, Brass, and Bronze Pipe Fittings for recycled water shall be identified with purple color coating, purple polyethylene sleeve, identification labels or signs in accordance with Section 15000.

1.6 WARNING/IDENTIFICATION TAPE

Warning/Identification Tape shall be used for all copper tubing, except that which is bored or jacked, in accordance with Section 15000.

PART 2 MATERIALS

2.1 COPPER TUBING

Copper tubing shall conform to the requirements of ASTM B 88 Type K or ASTM B 88 M (Metric) Type A seamless copper water tube. Copper tubing up to 1” diameter shall be soft; 2” may be soft or rigid. Components shall be selected from the Approved Materials List in accordance with the Standard Drawings.

2.2 BRASS PIPE, NIPPLES, AND FITTINGS

Threaded nipples, brass pipe and fittings shall conform to ASTM B 43, regular wall thickness. Threads shall conform to ANSI B1.20.1. Fittings shall be flared or silver soldered pr CMWD Standard Drawings W3 and W4.

2.3 BRONZE APPURTENANCES

A. Corporation stops, curb stops, meter and angle meter stops, meter flange adapters, and bronze-bodied service saddles shall be selected from the Approved Materials List in accordance with the Standard Drawings.

B. Fittings shall be flared type or silver soldered.

C. All items specified herein shall be manufactured of bronze conforming to ASTM B 62.

D. Service saddles shall be the double strap type. Service saddles shall be used on all service and appurtenance connections on PVC piping. For piping materials other than PVC, service and appurtenance connections shall be performed in accordance with the Approved Drawings.

2.4 BOLTS AND NUTS FOR FLANGES

Bolts and nuts shall be in accordance with Section 15000 and the Approved Materials List.

2.5 WARNING/IDENTIFICATION TAPE

Warning/Identification Tape materials shall be in accordance with Section 15000 and shall be selected from the Approved Materials List.

PART 3 EXECUTION

3.1 COPPER TUBING AND FITTINGS

A. Trenching, bedding, backfilling and compacting shall be performed in accordance with CMWD Standard Drawings. Provide a minimum cover of 30” below finished street grade.

B. Cut tubing true and square and remove burrs.

C. Bends in soft copper tubing shall be long sweep. Shape bends with shaping tools. Form bends without flattening, buckling, or thinning the tubing wall at any point.

D. Assemble copper tubing and fittings per the manufacturer’s recommendation in accordance with the Standard Drawings.

E. Install warning/identification tape in accordance with Section 15000 and the Standard Drawings.

F. All fittings shall be soldered or flared as shown on the Approved Plans and Standard Drawings.

3.2 SERVICE SADDLES

A. Service saddles shall be located a minimum of 24” from any pipe joint or fittings.

B. Service saddles for connections shall be located a minimum of 24” from other saddles. Additionally, multiple service saddles for connections that are installed on the same side of a single pipe length shall be alternately staggered between 10o and 30o to prevent a weak plane in the pipe.

C. The surface of the pipe shall be clean and all loose material shall be removed to provide a hard, clean surface.

D. The service saddle shall be tightened in accordance with the manufacturer’s recommendations to ensure a tight seal, using care to prevent damage or distortion of the service saddle or corporation stop due to over-tightening.

E. The tap into the pipe shall be made in accordance with the pipe manufacturer’s recommendation. Tapping tools and shell cutters with internal teeth or double slots that will retain the coupon shall be used.

3.3 DISINFECTION AND BACTERIOLOGICAL TESTING

Disinfection, bacteriological testing, and flushing shall be performed in accordance with Section 15041.

3.4 HYDROSTATIC TESTING

Field hydrostatic testing shall be performed in accordance with Section 15044.

END OF SECTION

SECTION 15061 CEMENT-MORTAR LINED AND COATED STEEL PIPE AND SPECIALS

PART 1 GENERAL

1.1 DESCRIPTION

This section includes materials, design, fabrication, and installation of cement-mortar lined and coated steel pipe and specials.

1.2 REFERENCE STANDARDS

The publications listed below form part of this specification to the extent referenced and are referred to in the text by the basic designation only. Reference shall be made to the latest edition of said standards unless otherwise called for.

AWWA C200	Steel Water Pipe 6-inches and Larger
AWWA C205	Cement-Mortar Protective Lining and Coating
AWWA C206	Field Welding of Steel Water Pipe
AWWA C207	Steel Pipe Flanges
AWWA C208	Dimensions for Fabricated Fittings
AWWA C209	Cold Applied Tape Coating for the Exterior of Special Sections, Connection and Fittings for Steel Water Pipelines
AWWA C210	Coal-tar Epoxy Coating System for Interior and Exterior of Steel Water Pipelines
AWWA C213	Fusion-Bonded Epoxy Coating for the Interior and Exterior of Steel Water Pipelines
AWS	Standard Qualification Procedure for Manual Welding Operators
ASME	Boiler and Pressure Vessel Code
AWWA C214	Tape Coatings Systems for the Exterior of Steel Water Pipeline

1.3 RELATED WORK SPECIFIED ELSEWHERE

CMWD Standard Drawings
CMWD Standard Specifications 09900, 15000, 15041, 15044, 15074, 15100, 15102, 15108, and 15112.

1.4 SERVICE APPLICATION

Cement-mortar lined and coated steel pipe and specials shall be used only for specific purposes as shown on the Approved Plans. Generally, cement-mortar lined and coated steel pipe shall be used for transmission mains 24” or larger, but may be used for lines as small as 14” with the approval of the Engineer.

1.5 SPECIALS

A special is defined as any piece of pipe other than a normal full length of straight pipe. This includes, but is not limited to, elbows, short pieces, reducers, tees, crosses, spools, sections with outlets, beveled sections and access holes.

1.6 SUBMITTALS

The Contractor shall furnish submittals in accordance with Section 2-5.3, Submittals Shop Drawing. Submittals are required for the following:

A. Submit Shop Drawings, material lists, manufacturer's literature and catalog cuts of, but not limited to, the following:

Shop Drawings	Fabrication Details
Layout Schedule	Dimensional Checks
Manufacturer's tests	Protective Coatings
Mill Reports or Plant Test Reports	Welding Rods for Field Welding

Shop Drawings shall be submitted and approved prior to manufacture of pipe. The layout schedule shall indicate the order of installation, the length and location of each pipe section and special, the station and elevation of the pipe invert at all changes in grade, and all data on curves and bends for both horizontal and vertical alignment.

B. Submit data used by the Contractor in manufacture and quality control.

C. Test reports showing the physical properties of the rubber used in the gaskets shall be submitted.

1.7 PAYMENT

A. Payment for the Work in this section shall be included as part of the lump-sum or unit-price bid amount for which such Work is appurtenant thereto.

B. Payment by the linear foot shall be for each diameter and for each pipe strength designation measured horizontally over the pipe centerline.

1.8 QUALITY ASSURANCE

A. Cement-mortar lined and coated steep pipe shall be inspected at the supplier's manufacturing plant by the City Engineer. Developer shall be responsible for City Engineer's expenses, including travel, time, meals and overnight accommodations. Overnight accommodations and air travel may be required, at the discretion of the Engineer, if the manufacturing plant is more than 100 miles from the City Engineer's office.

B. In addition to the shop hydrostatic testing performed on pipe cylinders required per AWWA C200, all welds of specials and attachments (i.e., joint rings and nozzles) shall be tested by a dye-penetrant process. Certification of such testing shall be submitted to the City.

C. Field welders shall be certified under Section IX, Part A of the ASME Boiler and Pressure Vessel Code or in accordance with AWWA C206, Section 3. Welders shall present a copy of their certification to the City prior to performing any field welding. Certifications shall be dated within three (3) years of the job to be performed.

D. Plainly mark each length of straight pipe and each special at the bell end to identify the proper location of the pipe item by reference to the layout schedule.

E. The top of all pipe and specials shall be clearly identified by marking the top with "T.O.P." for easy identification in the field.

1.9 DELIVERY, STORAGE, AND HANDLING

Delivery, storage, and handling of the pipe and specials shall be as follows:

A. Pipe and fittings shall be carefully handled and shall be protected against damage to linings and coatings due to impact shocks. Pipe shall not be placed directly on rough ground but shall be supported in a manner which will protect the pipe against injury whenever stored at the site or elsewhere. Pipe shall be handled and stored per these requirements and in accordance with the Manufacturer's recommendations.

B. Temporary internal bracing shall be installed in all pipe 24" and larger prior to shipment to the job site. Temporary internal bracing shall be 4" x 4" wooden struts installed in both the horizontal and vertical directions. Each set of struts shall be nailed together as a unit. Wooden wedges may be used to maintain the proper tight fit of the internal bracing. The bracing shall be located 12" in from each end of the pipe section for all pipe, and additionally at the mid-point for piping 30" and larger. Maintain internal bracing as specified under Pipe Installation.

C. Transport pipe to the job site on padded bunks with nylon tie-down straps or padded bonding to protect the pipe.

D. Pipes and specials shall only be handled with appropriate spreader bars and wide nylon slings. Chains or wire rope slings shall not be used. Under no circumstances shall pipe or specials be pushed or dragged along the ground. All pipe sections over 20' in length shall be lifted at the quarter points from each end.

E. Store pipe on earth berms or timber cradles adjacent to the trench in the numerical order of installation. Place the supports at about one-quarter point from the pipe ends.

F. Maintain plastic end caps on all pipe and specials in good condition until the pipe is ready to be installed in the trench. Periodically open the plastic end caps and spray potable water inside the pipe for moisture control.

PART 2 MATERIALS

2.1 PIPE DESIGN REQUIREMENTS

Pipe manufacturing shall be the product of one company in the business of designing and manufacturing cement-mortar lined, tape wrapped and mortar coated steel pipe.

The pipe shall consist of the following components:

A welded steel cylinder with joints formed integrally with the steel cylinder or with steel joint rings welded to the ends; A centrifugally-cast cement-mortar lining; A self-centering bell and spigot joint with a circular preformed elastomeric gasket, so designed that the joint will be watertight under all conditions of service; Tape wrapping of the cylinder over a dielectric coating; A dense, concentric, steel reinforced exterior cement-mortar coating.

The Plans indicate the elevations and alignment of the pipeline, the nominal inside diameter of the lined pipe, and the minimum steel cylinder thickness or design pressure (adjusted to satisfy transient conditions). Design soil cover shall be as stated on the Plans or Specifications or, if none is stated, the amount of cover shall be scaled from the Plans.

Minimum thickness of the steel cylinder shall be as shown on the Plans or, if not shown on the Plans, as determined by the following formula, except that steel thickness shall not be less than 10 gauge (0.1345-inch).

$$t = \frac{Pd}{2S}$$

Where

P = Design pressure, in psi plus 50 psi minimum
S = Steel stress at design pressure, i.e., 16,500 psi
t = Steel cylinder thickness, in inches
d = OD of steel cylinder, in inches

2.2 STEEL CYLINDERS

Materials used in fabricating steel cylinders shall be hot rolled carbon steel sheets conforming to the requirements of ASTM A53, Grade B, ASTM A570 Grade 36 or Grade 33, or steel plates conforming to the requirements of ASTM A36. The method of testing shall conform to the requirements of ASTM A570.

Full penetration welds will be required. Welds may be straight or spiral seam. The circumferential stress in the steel shall not exceed 16,500 psi at the design pressure.

Remove the exterior weld bead along the entire exterior surface of the pipe. The exterior weld bead shall be flush with the exterior surface of the pipe with a tolerance of plus 1/32-inch.

2.3 CEMENT

Cement for mortar lining and coating shall be Portland Cement Type II and conform to ASTM C150, unless otherwise specified. Admixtures containing chlorides shall not be used.

2.4 STEEL BAR OR WIRE REINFORCEMENT

Circumferential steel bar or wire reinforcement shall conform to ASTM A615, Grade 40, "Specifications for Billet-Steel Bars for Concrete Reinforcement". Wire fabric reinforcing for cement-mortar coatings and linings of fittings shall conform to ASTM A185, "Specifications for Welded Steel Wire Fabric," or ASTM A497, "Specifications for Welded Deformed Steel Wire Fabric." Spiral-wire reinforcement for cement-mortar coatings shall conform to ASTM A82.

2.5 STEEL FOR JOINT RINGS

Steel for bell rings shall conform to ASTM A575, "Specification for Merchant Quality Hot Rolled Carbon Steel Bars." Steel for spigot rings shall conform to ASTM A576, "Specification for Special Quality Hot-Rolled Carbon Steel Bars."

2.6 DIMENSIONS

The steel pipe sizes shown on the Plans or otherwise referred to shall be the nominal inside diameter. Unless otherwise specified, the nominal diameter shown on the Plans shall be considered to be the inside diameter after lining.

2.7 MANUFACTURER'S TESTS

Each steel cylinder with joint rings attached and cylinders for specials shall be hydrostatically tested to a circumferential stress of at least 22,000 psi, but not more than 25,000 psi. If leaks develop during testing, the cylinder shall be repaired by welding and retested until all leaks are eliminated.

The seams in short radius bends and special fittings shall be tested by the air-soap method using air at a pressure of 5 psi or by the dye-check method. However, if the fitting is fabricated from cylinders which have been previously hydrostatically tested, no further test will be required on seams so tested.

Hydrostatic testing of fittings to 150% of the design pressure may replace the tests described above. Any defects revealed by any of the alternate test methods shall be repaired by welding and the fitting retested until all defects have been eliminated.

2.8 FABRICATION DETAILS

Each special and each length of straight pipe shall be plainly marked at the bell end to identify the design pressure and the proper location of the pipe or special by reference to layout schedule.

Exposed portion of joint rings shall be protected from corrosion by the manufacturer's standard coating.

The pipe shall be fitted with devices shown on the Plans to permit continuous electrical bonding of the various joints following field installation.

2.9 PROTECTIVE COATINGS AND LININGS

All exposed metal surfaces shall be painted or coated as specified in Section 09870 and 09900, Painting and Coating, except where other coatings are specified elsewhere and in this section.

All steel pipe and fittings shall be cement-mortar lined in accordance with AWWA C205 and C602. Linings shall be in accordance with table below.

All steel pipe and fittings for underground service shall be cement-mortar lined, taped wrapped and cement-mortar coated in accordance with AWWA C205, C214 and C602 and Section 09870 unless otherwise specified on the Plans.

For the following nominal inside diameters, the lining thickness and minimum cement-mortar coating thickness shall be as follows:

	LINING		**COATING**	
Nominal Pipe Size (inches)	Thickness (inches)	Tolerance (inches)	Thickness (inches)	Tolerance (inches)
4 – 10	1/4	-1/32+1/32	1/2	+1/8
12 – 18	3/8	-1/16+1/8	5/8	+1/8
20 – 44	1/2	-1/16+1/8	3/4	+1/8
45 – 58	3/4	-1/16+1/8	1	+1/8
60 and over	3/4	-1/16+1/8	1 1/4	+1/8

2.10 STEEL PIPE AND SPECIALS

Steel pipe and specials shall conform to the requirements of the AWWA C200 and C205, and AWWA M11, except as modified herein.

A. Steel for fabricated cylinders shall conform to ASTM A 36/A 36M, ASTM A 283/ A 283M, Grade D, or ASTM A 570/A 570M, Grade 36. Other steel grades may be used only upon approval of the City Engineer.

B. Cement-mortar coating shall be reinforced in accordance with AWWA C205.

C. Cement mortar grout for field joints shall consist of a mixture of 1-1/2 to 2 parts sand to 1 part Type II or Type V Portland Cement with enough clean, potable water to permit packing and troweling without crumbling. The sand shall be washed, well-graded sand such that all will pass a No. 8 sieve. The quantity of water to be used in the preparation of grout shall be the minimum required to produce a mixture sufficiently workable for the purpose intended. Grout shall attain a minimum compressive strength of 12.4 MPa (1,800 psi) in 28 days.

D. In certain circumstances, rapid-setting mortar may be required. Acceleration admixtures may be used in the mix as permitted by the City Engineer. Calcium chloride shall not be used in the mix.

2.11 PAINTING AND COATING

A. Paint and coating products for exterior surfaces of all pipe and appurtenances not otherwise mortar-coated shall be in accordance with Section 09910 and the Approved Materials List.

B. Paint and coating products for areas in contact with potable water such plain ends of pipe, grooved and shouldered ends of pipe and exposed inside surfaces or threaded outlets and blind flanges shall be in accordance with Section 15000 and selected from the Approved Materials List.

2.12 BOLTS AND NUTS FOR FLANGES

Bolts and nuts shall be in accordance with Section 15000 and the Approved Materials List.

2.13 GASKETS

A. Rubber-ring gaskets shall comply with AWWA C200 according to the applicable joint type and pressure rating of the piping system.

B. Flange gaskets shall comply with AWWA C207. Flange gaskets shall be 3.18mm (1/8") thick acrylic or aramid fibers bound with nitrile for all sizes of pipe. Gaskets shall be full-face type with pre-punched holes or ring-type extending to the inner edge of the bolt circumference of the flange.

C. In the event of encountering organic solvents or petroleum products during the course of the work, alternate gasket materials or joint treatment will be required as directed by the City Engineer.

2.14 CEMENT-MORTAR CURING

The pipe shall be cured by water curing, steam curing or a combination of both. Water curing and steam curing may be used interchangeably on a time ratio basis of four hours water curing to one hour of steam curing. Where steam curing is used, the pipe shall be kept in steam maintained at a temperature of 100 F to 150 F for the specified period and, where water curing is used, the pipe shall be kept continually moist by spraying or other means for the specified periods. The pipe shall not be allowed to dry either on the inside or outside surfaces during the curing period.

Where water curing is used, the pipe shall be kept continuously moist for seven days at a temperature of not less than 40 F before being moved to the trench site.

Cement-mortar lining and coating of special pipe and fittings may be cured in accordance with the above provisions or by prompt application of a white-pigmented sealing compound conforming to ASTM C309. Sealing compound shall not be applied at joint ends where compound will interfere with the bond of joint mortar.

2.15 SPECIAL PIPE AND FITTINGS

The manufacturer shall furnish all fittings and special pieces required for closures, curves, bends, branches, manholes, outlets, connections for mainline valves, and other appurtenances required by the Plans.

Special fittings shall be fabricated of welded steel sheet or plate, lined and coated with cement-mortar of the same type as the adjoining pipe and applied as specified for lining and coating of specials in AWWA C205 and as modified herein. Butt welding shall be used, unless otherwise indicated on the Plans.

Minimum centerline radius of an elbow or bend shall be as follows. The maximum deflection at a mitered girth seam shall be 22-1/2 degrees.

Pipe Size (Inches)	**Minimum Centerline Radius**
30 - 48	2-1/2 times ID
51 - 60	10-feet
Over 60	2 times ID

The circumferential stress in the sheet or plate shall not exceed 13,500 psi at the design pressure. The minimum thickness of sheet or plate shall be as follows:

Fitting Diameter Range (Inches)	Minimum Thickness of Sheet or Plate
18 and under	10 gauge
20 - 24	3/16" or 7 gauge
26 - 36	1/4"
38 - 45	5/16"
48 - 54	3/8"
57 - 60	7/16"
63 - 72	1/2"
75 - 84	5/8"

Outlets at special fittings shall be reinforced with collars or crotch plates. If collar reinforcement is used, the outlet diameter shall not exceed 69% of the ID of the fitting. The diameter of outlets reinforced with crotch plates may equal the fitting diameter.

The effective shoulder width "W" of collars from the inside surface of the steel outlet to the outside edge of the collar measured on the surface of the cylinder shall be not less than one-third or more than one-half the ID of steel outlet. The thickness of the collar shall be not less than "T" as determined by:

$$T = \frac{Pw \times ID\ cyl. \times ID\ outlet}{36{,}000 \times W}$$

where Pw is the design pressure in pounds per square inch, and all other dimensions are in inches. Collars may be oval in shape or rectangular with well-rounded corners. Outlets 3-inches in diameter and smaller may be installed without collars.

The design of crotch plates shall be based upon the paper by Swanson, Chapton, Wilkinson, King, and Nelson, originally published in June 1955 issue of the Journal of the American Water Works Association and in conformance with AWWA M-11.

2.16 TAPE WRAP AND MORTAR SHIELD

Tape wrap and mortar shield for concrete mortar lined steel pipe shall be in accordance with Section 09870.

2.17 HANDLING AND SHIPMENT

Pipe and special fittings shall be handled carefully, and blocking and holddowns used during shipment shall prevent movement or shifting. Both ends of pipe and fittings on trucks or rail cars shall be bulkheaded or covered in order to prevent excessive drying of the interior lining.

PART 3 EXECUTION

3.1 GENERAL

At all times when the work of installing pipe is not in progress, including worker break times, the ends of the pipe shall be closed with a vermin-proof and child-proof cap or plug. Do not permit trench water to enter the pipe. Do not place tools, clothing, or other materials in the pipe. The Contractor shall maintain the interior of the pipe in a sanitary condition free from foreign materials.

3.2 DEWATERING

The Contractor shall provide, and maintain at all times during construction, ample means and devices to promptly remove and dispose of all water from any source entering trench excavations or other parts of the work in accordance with Section 02223. Any damage caused by flooding of the trench shall be the Contractor's responsibility.

Contractor shall obtain a Discharge Permit as required by the Regional Water Quality Control Board.

Dewatering shall be performed by methods that will maintain a dry excavation, preservation of the final lines and grades and protection of all utilities. If flooding of the trench does occur, the Contractor shall immediately dewater and restore the trench. Damaged or altered pipeline appurtenances shall be repaired or replaced as directed by the Engineer.

3.3 PIPE INSTALLATION

When the work requires and the size of the pipe allows entry of personnel into the pipe, the Contractor shall comply with all Federal and State regulations for confined space entry. Work inside pipelines shall not be undertaken until all the tests and safety provisions of the Code of Federal Regulations 1910.146, and the General Industry Safety Orders of the California Code of Regulations, Title 8, Section 5159 for confined space entry have been performed and the area is verified as safe to enter. Generally, the aforementioned safety provisions apply to pipe 24" and larger. Note that for pipe less than 24" diameter, more stringent safety procedures apply.

The Contractor shall furnish and install all pipe, specials, fittings, closure pieces, valves, supports, bolts, nuts, gaskets, jointing materials, and all other appurtenances as shown on the Approved Plans and as required to provide a complete and workable installation.

Pipe installations shall be as shown on the Approved Plans and Shop Drawings in accordance with the following:

A. No pipe shall be installed where the linings or coatings show cracks that may be harmful as determined by the City Engineer. Such damaged linings and coatings shall be repaired or new, undamaged pipe sections shall be provided.

B. Pipe damaged prior to Substantial Completion shall be repaired or replaced by the Contractor.

C. The Contractor shall inspect each pipe and fitting to ensure that there are no damaged portions of the pipe. The Contractor shall remove or smooth out any burrs, gouges, weld splatter, or other small defects prior to laying the pipe.

D. Before placement of pipe in the trench, each pipe or fitting shall be thoroughly cleaned of any foreign substance which may have collected thereon and shall be kept clean at all times thereafter. For this purpose, the openings of all pipes and fittings in the trench shall be closed during any interruption to the work as noted above.

E. Pipe shall be laid directly on the bedding material. No blocking will be permitted, and the bedding shall be such that it forms a continuous, solid bearing for the full length of the pipe. Excavations shall be made as needed to facilitate removal of handling devices after the pipe is laid. Bell holes shall be formed at the ends of the pipe to prevent point loading at the bells or couplings and to permit visual inspection of the joint. Excavation shall be made as needed outside the normal trench section at field joints to permit adequate access to the joints for field connection operations and for application of coatings on field joints.

F. Installation Tolerances: Each section of pipe shall be laid in the order and position shown on the approved layout schedule to the proper lines and grades in accordance with the following:

1. Each section of pipe having a nominal diameter less than 48" shall be laid not to vary more than 0.2-ft horizontally or 0.1-ft vertically from the alignment and elevations shown on the Approved Plans.

2. Each section of pipe having nominal diameter 48" and larger shall be laid not to vary more than five percent (5%) of the pipe diameter horizontally or two and one half percent (2.5%) of the pipe diameter vertically.

3. In addition to the horizontal and vertical tolerances above, lay the pipe so that no high or low points occur along the pipeline other than those shown on the approved layout schedule.

G. Where necessary to raise or lower the pipe due to unforeseen obstructions or other causes, the City Engineer may change the alignment and/or the grades. Such change shall be made by the deflection of joints, by the use of bevel adapters, or by the use of additional fittings. However, in no case shall the deflection in the joint exceed seventy five percent (75%) of the maximum deflection recommended by the pipe manufacturer. No joint shall be deflected any amount that will be detrimental to the strength and water tightness of the finished joint. In all cases the joint opening, before finishing with the protective mortar inside the pipe, shall be the controlling factor.

H. Pipes shall be laid uphill on grades exceeding 10 percent. Pipe that is laid on a downhill grade shall be blocked and held in place until the following pipe section has been installed to provide sufficient support to prevent movement.

I. Temporary internal pipe bracing shall be left in place in pipe sizes larger than 24" until pipe zone compaction has been completed. Bracing in pipe smaller than 24" may be removed immediately after the pipe has been laid into the trench. The Contractor shall employ a laboratory to monitor pipe deflection by measuring pipe inside diameter before bracing is removed and 24 hours after struts are removed. Pipe deflection shall not exceed 3 percent in 24 hours after the bracing has been removed. After the backfill has been placed, the struts shall be removed.

J. Cold Weather Protection: No pipe shall be installed upon a foundation onto which frost has penetrated or at any time that there is a danger of the formation of ice or penetration of frost at the bottom of the excavation. No pipe shall be laid unless it can be established that the trench will be backfilled prior to formation of ice and frost.

K. Pipe and Special Protection: The openings of all pipe and specials where the pipe and specials have been mortar-lined in the shop shall be protected with suitable bulkheads to maintain a moist atmosphere and to prevent unauthorized access by persons, animals, water, or any undesirable substance. The bulkheads shall be designed to prevent drying out of the interior of the pipe. The Contractor shall introduce water into the pipe to keep the mortar moist where moisture has been lost due to damaged bulkheads.

3.4 RUBBER-RING JOINTS: SHALL ONLY BE USED AS SHOWN ON PLANS

For pipe sizes smaller than 24-inches, the bell end shall be buttered with cement mortar in a manner and quantity that will completely fill the recess between the respective linings of the two joined sections of pipe. The spigot end shall then be entered into the bell end of the adjacent pipe section the distance shown on the Shop Drawings. Immediately after joining, the pipe interior shall be swabbed to remove all excess mortar by drawing a swab or squeegee through the pipe. The pipe interior shall be inspected by a closed circuit television camera, to assure quality of internal mortar.

For pipe sizes 24-inches and larger, the joint recess shall be pointed from the inside with cement mortar after the backfill has been placed and compacted and the pipe permitted to take any normal settlement. The mortar shall be mixed of one part cement to one and one-half parts of sand and pointing accomplished in two or more lifts and finished off flush by troweling. Pipe shall be inspected visually by work persons within the pipe, to assure internal mortar quality.

Each pipe joint shall be bonded to provide electrical continuity along the entire pipeline. The bond shall be made by the proper welding of pipe joints together as indicated on the Plans.

The outside joint recess shall be grouted with cement mortar after a diaper has first been placed around the joint and tightened securely to prevent leakage while the mortar is being poured. The diaper shall be made of moisture resisting paper or heavy duty sail cloth of sufficiently close weave to prevent cement loss from the mortar. The diapers shall be hemmed on each edge and shall contain a metal strap within each hem sufficiently longer than the circumference of the pipe to allow a secure attachment of the diaper to the pipe. The diaper width will depend upon pipe size and design and shall be the width recommended by the manufacturer. Following installation of the diapers, the joints shall be poured and rodded from one side only until the mortar comes up to the top of the diaper on the opposite side. Approximately one hour subsequent to the pouring of the joint, the joint shall be rechecked and, if any settlement, leakage or shrinkage has taken place, the joint shall be refilled with mortar.

Outside joints may be grouted before or after the placement of bedding and backfill materials if those materials are to be mechanically compacted. If bedding and backfill materials are to be hydraulically densified, grout shall be poured and allowed to set before applying water. In any case, joints shall be grouted before backfill is placed over the top of the pipe.

3.5 BUTT-STRAP CLOSURE JOINTS

Butt-Strap Closure Joints: Butt-strap closure joints shall be completed in the trench after the pipe has been laid to the alignment and grade shown on the Plans. They should be field welded by full-circumferential fillet welds or one of the edges may be shop welded and the other field welded. Welding shall be done in the same manner as specified for welded joints.

The interior of the joints shall be filled with stiff plastic mortar and finished off smoothly with the inside of the pipe. Clean the inside steel surfaces by wire brushing or power brushing. Wire mesh, 2" x 4" x No. 13 gauge, clean, and free from rust, shall be applied to the interior of the joints so that the wires on the 2-inch spacing run circumferentially around the pipe. The wires on the 4-inch spacing shall be crimped in such a manner that the mesh will be held 3/8-inch from the metal joint surface. The mesh shall be lapped a minimum of 8-inches and shall be securely wired in position. Pack the cement mortar into the recess of the joint and steel trowel finish to match the adjoining pipes.

The joint exterior shall be coated with mortar to a minimum thickness of 1½-inches. Immediately prior to applying mortar to the interior or exterior of the joints, a cement wash shall be applied to the metal to be coated.

3.6 FIELD WELDED JOINTS

A. Welded joints shall be completed after the pipe is in final position. Welded joints shall be a lap-welded slip joint as shown on the Plans. The minimum overlap of the assembled bell and spigot section of lap joint shall be shown on the plans. Any recess between the bell and spigot shall be caulked with a rod to facilitate the welding. Pipe of 30-inches in diameter or more may be welded from the inside. Joints shall be welded on the inside and outside where indicated on the Plans as “Double Welded Joints.” Field Welding shall be in accordance with AWWA C206 and AWS D1.1, except as modified herein. Welders assigned to the Work shall be qualified under the AWS standard qualification procedure, within the past three (3) years.

B. Joints to be welded shall be cleaned, preferably prior to placing the pipe in the trench, of all loose scale, heavy rust, paint, cement, and grease. At least a 1/2-inch recess shall be provided between adjacent mortar-covered surfaces to place the weld. In all hand welding, the metal shall be deposited in successive layers and the minimum number of passes shall be 2. Preheat the joints to be welded where required in accordance with Table 1 of AWWA C206.

C. All joints shall be visually inspected and shall undergo dye testing and hydrostatic testing, in accordance with AWWA C-206 and ASTM E165.

D. After the joints have been welded, the interior joint shall be grouted with cement mortar in accordance with sub-parts 3.9 and 3.10 of this Section.

E. Welded joints shall be completed in the trench per AWWA C206.

F. Both the bell and spigot ends shall be cleaned of foreign matter prior to welding.

G. Welding electrodes shall be as recommended by the pipe manufacturer. Typically, electrodes shall be E6010 for root passes and for additional passes. Do not deposit more than 1/8" of throat thickness per pass.

H. Weld material shall be deposited in successive layers. Complete and clean each pass around the entire circumference of the pipe before commencing the next pass.

I. The minimum number of passes in the completed weld shall be as follows:

Steel Cylinder Thickness mm	(inches)	Field Weld Minimum Number of Passes
6.35 or less	(0.2500 or ¼")	2
Greater than 6.35	(0.2500 or ¼")	3

J. To minimize longitudinal stresses due to temperature variations, it is necessary to leave unwelded one joint per each 400' of pipeline. This joint shall be left unwelded until all the joints on both sides of it are welded, and it shall be welded at the coolest time of the working day. The City Engineer shall decide if and when this procedure is warranted.

K. Tack-welding the joint may be permitted to hold the pipe in place. If the joint is to be circumferentially welded, sufficient time shall elapse to allow for an initial set of interior joint lining prior to proceeding with joint welding. Rapid-setting mortar may be used in accordance with this Section. In some cases, the City Engineer may require hand holes.

L. Field welders shall be certified in accordance with ASME Section 9 (pipe welders) or AWS D1.1 (plate welders). Welders shall present a copy of their certification to the City Engineer prior to performing any field welding.

M. Prior to butt-strap welding, the pipe and pipe joint shall be properly positioned in the trench using line-up clamps so that, in the finished joint, the abutting pipe sections shall not be misaligned by more than 1/16".

N. The pipe ends shall be cut straight on joints where butt straps are used for realignment, adjustment, or deflection, and fillet welds shall be made as indicated.

O. Inspection of Field Welded Joints:

1. The City shall arrange for the welds to be inspected. Inspection of welds shall take place as soon as possible following the completion of the welds.

2. The Contractor shall coordinate and supply ventilation, lighting, and other equipment deemed necessary for inspection. The Contractor shall be responsible for providing safe entry into and out of the trench, safety of inspection personnel, traffic control and other safety precautions deemed necessary for the inspections.

3.7 PREVENTING FOREIGN MATTER FROM ENTERING THE PIPE

At all times when pipe laying is not in progress, the open end of the pipe shall be closed with a tight-fitting cap or plug to prevent the entrance of foreign matter into the pipe. These provisions shall apply during the noon hour as well as overnight. In no event shall the pipeline be used as a drain for removing water which has infiltrated into the trench. The Contractor shall maintain the inside of the pipe free from foreign materials and in a clean and sanitary condition until its acceptance by the Owner's Representative.

3.8 HANDLING OF PIPE

Refer to Section 09870 regarding handling of the concrete mortar lined and tape wrapped and mortar coated steel pipe.

3.9 INTERIOR JOINT FINISH – PIPE LESS THAN 24"

Complete interior mortar joints for pipe sizes less than 24" by drawing through a tight-fitting swab or squeegee. Coat the face of the cement mortar lining at the bell with a sufficient amount of stiff cement mortar to fill the gap. Immediately after joining the pipes, draw the swab through the pipe to remove all excess mortar and expel it from the open pipe end. Do not move the pipe after the swab has been pulled past the joint. See requirements under "Field Welded Joints" for these joints requiring welding.

3.10 INTERIOR JOINT FINISH – PIPE 24" AND LARGER

A. Complete interior mortar joints for pipe sizes 24" and larger by the trowel method. Prior to applying interior mortar at the joints all backfill in the area shall be completed. After cleaning the interior joint, pack cement mortar into each joint. Finish the surface with a steel trowel to a smooth finish and equal thickness to match the adjoining pipe mortar.

B. Where more than a 4" joint strip of mortar is required, place galvanized welded wire mesh reinforcement in 2" x 4" pattern of No. 13 gauge over the exposed steel. Install the mesh so that the wires on the 2" spacing direction run circumferentially around the pipe. Crimp the wires on the 4" spacing to support the mesh 3/8" from the metal surface. Steel-trowel finish the interior mortar to match adjoining mortar-lined pipe sections.

3.11 EXTERIOR JOINT FINISH

A. The outside annular space between pipe sections shall be completely filled with grout formed by the use of polyethylene foam-lined fabric bands. The grout space shall be flushed with water prior to filling so that the surfaces of the joint to be in contact with the grout will be thoroughly moistened when the grout is poured. The joint shall be filled with grout by pouring from one side only. Grout shall be rodded with a wire or other flexible rod or vibrated so that the grout completely fills the joint recess by moving down one side of the pipe, around the bottom of the pipe and up the opposite side. Pouring and rodding the grout shall be continued to allow completion of the filling of the entire joint recess in one operation. Care shall be taken to leave no unfilled space. Grouting of the outside joint spaces shall be kept as close behind the laying of the pipe as possible except that in no case shall grouting be closer than three joints of the pipe being laid.

B. The grout bands or heavy-duty diapers shall be polyethylene foam-lined fabric with steel strapping of sufficient strength to hold the fresh mortar, resist nodding of the mortar, and allow excess water to escape. The foam plastic shall be 100 percent closed cell, chemically inert, insoluble in water and resistant to acids, alkalis and solvents. Foam Plastic shall be Dow Chemical Company, Ethafoam 222, or equal.

The fabric backing shall be cut and sewn into 9" wide strips with slots for the steel strapping on the outer edges. The polyethylene foam shall be cut into strips 6" wide and slit to a thickness of 1/4" that will expose a hollow or open-cell surface on one side. The foam liner shall be attached to the fabric backing with the open or hollow cells facing towards the pipe. The foam strip shall cover the full interior circumference of the grout band with sufficient length to permit a 8" overlap of the foam at or near the top of the pipe joint. Splices to provide continuity of the material will be permitted. The polyethylene foam material shall be protected from direct sunlight.

The polyethylene foam-lined grout band shall be centered over the joint space with approximately equal widths extending over each pipe end and securely attached to the pipe with the steel straps. After filling the exterior joint space with grout, the flaps shall be closed and overlapped in a manner that fully encloses the grout with polyethylene foam.

C. Following grouting, the joint shall then be wrapped with two layers of polyethylene encasement in accordance with Section 15000.

3.12 BUTT STRAP JOINTS

Butt strap closure joints shall be installed where shown on the Approved Plans in accordance with AWWA C206.

A. Butt straps shall be field welded to the outside plain end of the pipe along both edges with a full circumferential weld. A minimum of two weld passes shall be used.

B. The interior of the joints shall be filled with a rapid-set mortar and finished off smoothly to match the pipe interior diameter.

C. Clean the butt strap with a wire brush and apply a cement and water wash coat prior to applying cement mortar.

D. Galvanized wire mesh, 2" x 4" x No. 13 gauge shall be installed to the exterior of the joint prior to applying the mortar coating.

E. Coat the exterior of the closure assemblies with mortar to cover all steel with a minimum of 1-1/4".

F. Seal weld the steep plug to the hand hole after the interior of the joint has been inspected and approved by the City Engineer.

G. Following grouting, the joint shall then be wrapped with two layers of polyethylene encasement in accordance with Section 15000.

3.13 FLANGED CONNECTIONS

Flanged connections shall be installed where indicated on the Approved Plans.

A. Bolt holes shall straddle the horizontal and vertical centerlines.

B. The bolts, nuts and flange faces shall be thoroughly cleaned by wire brush prior to assembly.

C. Bolts and nuts shall be lubricated with a City-approved anti-seize compound.

D. Nuts shall be tightened in an alternating "star" pattern to the manufacturer's recommended torque.

E. Slip-on type flanges intended for field fit-up and welding shall be welded inside and outside in accordance with AWWA C207.

F. Coat the exterior of exposed flanges, bolts and nuts in accordance with Section 09900.

3.14 FLANGED COUPLING ADAPTERS

Flanged coupling adapters shall be installed in accordance with the manufacturer's recommendations. Bolts shall be tightened with a torque wrench in the presence of the City Engineer to the torque recommended by the manufacturer.

3.15 JOINT BONDING/CATHODIC PROTECTION INSULATION

Bonding of joints to provide continuity, flange insulation kits, internal epoxy linings, and other cathodic protection items and materials shall be installed where shown on the Approved Plans in accordance with the Standard Drawings and Section 13110.

3.16 WAX TAPE

Wax tape shall be installed on all buried bolted connections, valves, fittings and couplings in accordance with Section 09902 and the Standard Drawings, unless the pipeline is otherwise protected with an approved cathodic protection system.

3.17 CONCRETE

Where required, concrete thrust and anchor blocks shall be installed in accordance with Section 03000 and as shown on the Approved Plans. Prior to filling the pipeline with water, refer to Section 03000 for the minimum concrete curing time required.

3.18 WARNING/IDENTIFICATION TAPE

Warning/Identification Tape shall be installed in accordance with Section 15000 and the Standard Drawings.

3.19 DISINFECTION AND BACTERIOLOGICAL TESTING

Disinfection, bacteriological testing, and flushing shall be performed in accordance with Section 15041.

3.20 HYDROSTATIC TESTING

Field hydrostatic testing shall be performed in accordance with Section 15044.

3.21 FIELD PAINTING AND COATING

A. Exterior surfaces of all pipe and appurtenances not otherwise mortar-coated shall be field painted in accordance with Section 09900.

B. Areas in contact with potable water such plain ends of pipe, grooved and shouldered ends of pipe and exposed inside surfaces of threaded outlets and blind flanges shall be coated in accordance with Section 15000.

END OF SECTION

SECTION 15063 POLYVINYL CHLORIDE (PVC) GRAVITY SEWER PIPE

PART 1 - GENERAL

1.1 DESCRIPTION

This section designates the requirements for the manufacture and installation of polyvinyl chloride, abbreviated PVC, gravity sewer pipe to be furnished and installed by the Contractor, at the location and to the lines and grades shown on the Plans as herein specified. This work shall be in accordance with these specifications and the City of Carlsbad Standards for Sanitary Sewers.

1.2 REFERENCE STANDARDS

ASTM D2321	Underground Installation of Flexible Thermoplastic Sewer Pipe
ASTM D2412	Pipe Stiffness Test
ASTM D3034	PVC Sewer Pipe and Fittings (4" to 15")
ASTM D3212	Joints for Drain and Sewer Plastic Pipe Using Elastomeric Seals
ASTM F477	Elastomeric Gaskets for Joining Plastic Pipe
ASTM F679	PVC Large Diameter Gravity Sewer Pipe and Fittings (18" to 27")
UNI-B-5	Uni Bell Recommended Practice for the Installation of PVC Sewer Pipe

1.3 RELATED WORK DESCRIBED ELSEWHERE

The Contractor shall refer to the following Specification section(s) for additional requirements:

A. Trenching, Excavation, Backfilling and Compaction: 02223
B. Cast-In-Place Concrete: 03000
C. Testing of Gravity Sewer Pipelines: 15043

1.4 SUBMITTALS

The Contractor shall furnish submittals in accordance with the General Provisions. Submittals are required for the following:

A. Submit Shop Drawings, material lists, manufacturer's literature and catalog cuts and other information.

B. An affidavit from the pipe manufacturer including compliance with requirements of the Plans and Specifications shall be delivered with the pipe.

1.5 QUALITY ASSURANCE

A. The manufacturer of each shipment of pipe shall be required to supply a statement certifying that each lot or load of pipe has been subjected to the tests specified for PVC gravity sewer pipe. Tests shall show that the pipe has been found to meet all the requirements of ASTM D3034, F679, and/or F794 as applicable.

B. Sewer pipe shall be furnished in standard 14' or 20' lengths, unless otherwise detailed or required on the Approved Plans. Random lengths may be furnished but shall not exceed 15% of the total footage.

C. PVC pipe and couplings shall bear indelible identification markings as required by ASTM D3034, F679 and/or F794 and as follows:

1. All pipe, fittings, and couplings shall be clearly marked at an interval not to exceed 5' as follows:

   a. Nominal pipe diameter.

   b. PVC cell classification.

   c. Company, plant, date of manufacture, ASTM and SDR designation. Fittings and couplings do not require the SDR designation.

   d. Service designation or legend.

2. All pipe shall have home marks on the spigot ends to indicate proper penetration when joints are made.

1.6 DELIVERY, STORAGE, AND HANDLING

A. PVC pipe shall be stored in suppliers' yards and on the job site in accordance with AWWA M23 and the manufacturer's recommendations. PVC pipe that has been subjected to excessive ultraviolet radiation from the sun shall not be used. The determination as to the acceptability of PVC pipe faded by the sun's radiation shall rest solely with the City's Engineer.

B. Store PVC pipe in the field by supporting the pipe uniformly per AWWA M23. Do not stack pipe higher than 4' or stack the pipe with weight on the bell ends. Cover stored PVC pipe to protect it from the sun's ultraviolet radiation. Any pipe that has been contaminated with any petroleum products (inside or outside) shall not be installed.

C. Pipe and fittings shall be handled according to manufacturer's recommendations. Proper care shall be used to prevent damage in handling, moving, and placing the pipe. All pipe, fittings, and other pipeline materials shall be lowered into the trench in a manner that prevents damage. Pipe shall not be dropped, dragged or handled in a manner that will cause bruises, cracks, or other damage. PVC pipe or fittings that have been gouged or scratched shall be subject to rejection as determined by the City Engineer.

PART 2 - MATERIALS

2.1 GENERAL

PVC gravity sewer pipe shall be made of PVC plastic having a cell classification of 12454-B, 13364-A, or 13364-B as defined in ASTM D1784. The fittings shall be made of PVC plastic having a cell classification of 12454-B, 12454-C, or 13343-C as defined in ASTM D1784.

2.2 PIPE

A. PVC gravity sewer pipe, fittings, coupling and joints, 4-inch through 15-inch, shall be manufactured in conformance with the requirements of ASTM D3034, SDR 35 and shall have gasketed joints. All pipe shall be of solid wall construction with smooth interior and exterior surfaces.

B. PVC gravity sewer pipe, fittings, coupling and joints, 18-inch through 21-inch, shall be manufactured in conformance with the requirements of ASTM F679 with T-1 wall thickness and shall have gasketed joints. All pipe shall be of solid wall construction with smooth interior and exterior surfaces.

C. The minimum pipe stiffness for both small diameter and large diameter PVC gravity sewer pipe shall be 46 psi according to ASTM D2412.

D. Pipe Manufacturer's, or equal

1. J-M Manufacturing, Co.
2. Certainteed Corp.
3. Diamond Plastics

2.3 JOINTS

A. The pipe shall be jointed with an integral bell gasketed joint that meets the requirements of ASTM D3212. The gasket shall be manufactured from a synthetic elastomer and factory installed in the belled end of the pipe. Gasket shall conform to ASTM F477.

B. All pipe shall have a homemark on the spigot end to indicate proper penetration when the joint is made. The socket and spigot configurations for fittings and couplings shall be compatible to those used for the pipe.

PART 3 - EXECUTION

3.1 GENERAL

A. At all times when the work of installing pipe is not in progress, including worker break times, close the ends of the pipe with a tight-fitting, vermin-proof and child-proof, cap or plug. Do not permit trench water to enter the pipe. Do not place tools, clothing, or other materials in the pipe. The Contractor shall maintain the interior of the pipe in a sanitary condition free from foreign materials.

B. Where pipe sections less than standard pipe lengths are required, the pipe sections shall be installed in accordance with the manufacturer's installation guide and shall only be used with the approval of the City Engineer. The minimum pipe length permitted is 5' when used to connect to manholes and cleanouts. The minimum pipe length permitted for stub outs shall be 36".

3.2 TRENCHING, BACKFILLING AND COMPACTION

Trenching, bedding, backfilling and compaction operations shall be performed in accordance with Section 02223.

3.3 DEWATERING

The Contractor shall provide and maintain at all times during construction ample means and devices to promptly remove and dispose all water from any source entering trench excavations or other parts of the work in accordance with Section 02223. Any damage caused by flooding of the trench shall be the Contractors responsibility.

Dewatering shall be performed by methods that will maintain a dry excavation, preservation of the final lines and grades and protection of all utilities. Sewer mains shall not be used as drains for dewatering construction trenches. If flooding or the trench does occur, the Contractor shall immediately dewater and restore the trench. Damaged or altered pipeline appurtenances or trench materials shall be repaired or replaces as directed by the Engineer.

3.4 PIPELINE INSTALLATION

When the work requires and the size of the pipe allows entry of personnel into the pipe, the Contractor shall comply with all Federal and State regulations for confined space entry. Work inside pipelines shall not be undertaken until all the tests and safety provisions of the Code of Federal Regulations 1910.146, and the General Industry Safety Orders of the California Code of Regulations, Title 8, Section 5159 for confined space entry have been performed and the area is verified as safe to enter.

The Contractor shall furnish and install all pipe, specials, fittings, closure pieces, supports, gaskets, jointing materials, and all other appurtenances as shown and as required to provide a complete and workable installation. Pipe installation shall be as recommended in UNI-B-5 except as modified below and as shown on the Approval Plans.

A. Inspect each section of pipe prior to lowering the pipe into the trench. Thoroughly clean the ends of the pipe. Remove foreign matter and dirt from inside of the pipe and keep pipe clean during and after installation.

B. Install pipe according to the manufacturer's approved order of installation to the proper lines and grades as shown on the Approved Plans.

   1. Pipe shall be installed with pipe bells up-grade. Lay pipes uphill if the grade exceeds 10 percent (10%).

   2. Installation tolerances for the pipe shall not vary more than 2" horizontally or 1" vertically from the alignment and elevation shown on the Approved Plans.

   3. Install the pipe such that the identification markings on each pipe section are continuously aligned for the total length of the pipeline alignment. Orient the strip marking upwards to the 12 o'clock position (top) of the trench opening.

   4. Avoidance of reverse slope: Any pipeline installed with reversed slope, as evidence by ponding of water or sag, is not allowed. Any such pipeline shall be removed and replaced (at proper line and grade) to the nearest upstream and downstream sewer structure as directed by the City Engineer.

C. The pipe shall have firm bearing along its full length, and bell holes shall be provided at each joint to permit visual inspection of the joint and prevent the pipe from being supported by the bell and or coupling.

D. Field cutting and milling shall be accomplished to equal the quality of shop-fabricated ends in accordance with the manufacturer's written instructions.

E. Pipe Assembly: Assemble the pipe joint using the lubricant supplied by the pipe manufacturer. Insert the spigot end into the bell or coupling to proper insertion mark. Check that the elastomeric ring has not left the groove during assembly by passing a feeler gauge around the completed joint. Drive the spigot end into the bell in accordance with the manufacturer's recommendations. Stabbing shall not be permitted.

F. Pipe curvature shall comply with design requirements specified in Chapter 6 of Volume 1 of the Carlsbad Engineering Standards. Mechanical means shall not be used to accomplish bending. Bending should be done manually by workers in the trench. Curvature will be accomplished by bending the pipe rather than deflecting joints.

G. PVC wyes shall be located where shown on the Approved Plans in accordance with the Standard Drawings. Wyes shall not be placed closer than 5' from the exterior of any structure such as manholes.

3.5 SEWER LATERALS

A. The Contractor shall install sewer laterals using wye-branch fittings sized and located as shown on the Approved Plans.

B. All sewer laterals that are to be left unconnected to a building lateral extension shall be capped and identified as shown on the Standard Drawings.

C. All sewer laterals shall run perpendicular from the sewer main to the property line. They shall be bedded, backfilled and compacted the same as the sewer main into which they connect in accordance with Section 02223.

D. All Sewer laterals shall be plugged or capped at the end of the last joint, to withstand the internal pressure during leakage and infiltration testing.

3.6 SADDLE CONNECTIONS TO EXISTING SEWER MAINS

The Contractor shall furnish the saddle fitting, appurtenances and all other materials necessary to complete the connection. The Contractor shall provide all equipment and labor required for the excavation and installation of the connection including, but not limited to backfill and pavement replacement. In certain circumstances the Contractor may be required to provide a water truck, bypass pump, and fittings as part of the equipment for making the connections. Emergency standby equipment or materials may be required of the Contractor by the City Engineer.

Saddle connections to existing sewer mains for the tie-in of new sewer laterals shall be as follows:

A. Prior to construction, Contractor shall pothole the existing pipe at the location of the proposed connection. The City shall inspect the pothole prior to Contractor's repair of trench. Contractor shall record the following information on Record Drawings:

   1. Pipe size, outside diameter.

   2. Pipe type such as PVC or VCP.

   3. Elevation, grade, and alignment.

   4. Can the tie-in be made at the indicated location, assure no collars, pipe bells, fittings or couplings exist in the area of the connection.

   5. Potential conflicts with existing utilities.

B. To facilitate the proposed connection and allow for slight adjustment in alignment, the Contractor shall leave a minimum 10' gap between the new pipe installation and the proposed connection point at the existing main. The Contractor shall leave a gap longer than 10' if conditions warrant, or if directed by the Engineer.

C. After the City Engineer has given approval to proceed with the connection, the Contractor shall schedule the connection with the City Engineer.

   1. Tie-ins will be scheduled at the convenience of the City. Work may be scheduled for nights and weekends if required.

2. The Contractor shall give the City Engineer a minimum of five (5) working days notice prior to any proposed excavation. Scheduling shall be subject to approval of the City Engineer.

3. The City Engineer may postpone or reschedule the connection operation if, for any reason, the City Engineer believes that the Contractor is improperly prepared with competent personnel, equipment, or materials to proceed with the connection.

4. If progress in completing the connection within the time specified is inadequate, the City Engineer may order necessary corrective measures. Corrective measures may consist of directing City personnel or another contractor to complete the work. All costs for corrective measures shall be borne by the Contractor.

D. Contractor may proceed with the excavation and connection, only when approved materials are onsite, connection operations have been scheduled and a copy of the approved traffic control plan has been supplied to the City Engineer.

1. The Contractor shall saw-cut pavement, excavate and provide and install shoring and steel plating, when necessary, one day prior to the wet tap or cut-in installation.

2. The Contractor shall provide lights, barricades and traffic control in accordance with the Agency of jurisdiction as deemed necessary for the excavation by the City Engineer.

3. After the City Engineer has given approval to proceed, the Contractor shall complete the installation as shown on the Approved Plan in accordance with Standard Specifications including:

a. Installing the pipe section(s) necessary to make the closure to the new system.

b. Complete all backfill and compaction of the trench in accordance with Section 02223.

c. Make all pavement repairs and/or replacement as necessary in accordance with agency of jurisdiction requirements.

d. Discard pipe and appurtenances removed from service as specified in this Section.

e. In lieu of a saddle connection, a wye connection may be made by cutting the sewer and installing a wye. All applicable provisions of this Specification will be adhered to in making a cut-in wye connection.

3.7 CONNECTION TO EXISTING SEWER SYSTEMS

A. Connection to the existing sewer system at an existing manhole or dead end shall be made as shown on the Approved Plans in accordance with Section 03460. All work shall be performed in the presence of the City Engineer.

B. In order to prevent accidental use of the new sewer before completion and acceptance, the new inlet to the existing tie-in manhole and outlet of the new upstream manhole shall be sealed with expandable plugs. Installation of plugs shall be in accordance with the manufacturer's recommendations and as approved by the City Engineer. Plugs shall be removed at the time of final inspection or as directed by the City Engineer.

3.8 PIPELINE ABANDONMENT

A. Sewer pipelines specifically identified to be abandoned in-place shall be slurry filled with a 2-sack cement slurry. All other inactive sewer lines shall be removed, unless directed otherwise by the City Engineer.

B. Sewer laterals shall be cut and capped at the main or property line, as directed by the City Engineer.

END OF SECTION

SECTION 15064 POLYVINYL CHLORIDE (PVC) PRESSURE PIPE AND FITTINGS (AWWA C900)

PART 1 GENERAL

1.1 DESCRIPTION

This section designates the requirements for the manufacture and installation of polyvinyl chloride, abbreviated PVC, pressure pipe, to be furnished and installed by the Contractor, at the location and to the lines and grades shown on the Plans as herein specified.

Specifications for related Work are as follows:

AWWA C900	PVC Pressure Pipe
ANSI A21.10	Ductile Iron and Gray-Iron Fittings
AWWA C110	Ductile Iron and Gray-Iron Fittings
AWWA C153	Ductile Iron Compact Fittings
AWWA Manual M23	Pipe Design and Installation

1.2 RELATED WORK DESCRIBED ELSEWHERE

The Contractor shall refer to the following Specification section(s) for additional requirements:

A. Disinfection of Piping: 15041
B. Hydrostatic Testing of Pressure Pipeline: 15044

1.3 SUBMITTALS

The Contractor shall furnish submittals in accordance with Section 2-5.3 of the GENERAL PROVISIONS. Submittals are required for the following:

A. Submit Shop Drawings, material lists, manufacturer's literature and catalog cuts and other information. Materials shall be selected from the Approved Materials list.

B. Submit an affidavit from the pipe manufacturer that all delivered materials comply with the requirements of AWWA C900, the Plans and Specifications.

1.4 PAYMENT

A. Payment for the Work in this section shall be included as part of the lump-sum or unit-price bid amount for which such Work is appurtenant thereto.

B. Payment by the linear foot shall be for each diameter and for each pipe strength designation measured horizontally over the pipe centerline.

PART 2 - MATERIALS

2.1 GENERAL

Material used to produce the pipe shall be made from Class 12454-A or B rigid polyvinyl chloride compounds in accordance with AWWA C900 Section 2.1 (Basic Materials), with an established hydrostatic design basis (HDB) equal to or greater than 4000 psi for water at 73.4 degrees F (23 C). Elastomeric gaskets shall comply with the requirements of AWWA C900 Sections 2.1.5 and 2.1.5.1 (Gaskets and Lubricants).

2.2 PIPE

PVC pressure pipe, 4-inch through 12-inch, shall be manufactured in accordance with AWWA C900, and shall be of the sizes and dimension ratio (DR) shown on the Plans. The pipe shall have integral bell and spigot joints with elastomeric gaskets in accordance with AWWA C900 Section 2.2 (Pipe Requirements). The pipe shall conform with the outside diameter of cast-iron pipe unless otherwise specified and shall conform with the wall thickness of DR series 14 or 18.

2.3 FITTINGS

All fittings for PVC pressure pipe shall be manufactured in accordance with ANSI A21.10, AWWA C110 or C153. All fittings shall be made of ductile iron and the letters "DI" or "DUCTILE" shall be cast on them, unless otherwise specified. Bell size shall be for Class 150 and Class 200 cast-iron equivalent PVC pressure pipe, including the rubber-ring retaining groove.

2.4 SERVICES SADDLES

Service saddles for PVC pressure pipe shall be made of silicone bronze or brass and shall be double banded or wide single band style and selected from the Approved Materials list. The band(s) and nuts shall be type 304 stainless steel and designed specifically for use with AWWA C900 PVC pipe. Each saddle shall accurately fit the contour of the pipe O.D. without causing distortion of the pipe. The saddle shall be securely held in place with stainless steel bolts and nuts. The service saddle shall have a published working pressure at least equal to the pressure class of the pipe on which it is installed.

All saddles shall be provided with torque information and installation instructions. Saddles shall be in accordance with Carlsbad Rules and Regulations for the Construction of Potable Water Mains.

2.5 JOINT RESTRAINT SYSTEMS

Joint Restraint Systems may be used for PVC or ductile-iron pipe when shown on the Approved Plans or with prior approval of the City Engineer. Contractor shall submit shop drawings and catalog data for joint restraint systems in accordance with the General Provisions.

Joint Restraint Systems shall be ductile-iron and shall consist of a split-ring restraint with machined (not cast) serrations on the inside diameter and connecting bolts, and shall be selected from the Approved Materials List.

2.6 DEFLECTION COUPLINGS

A. Deflection couplings shall be selected from the District's approved materials list and deflections shall not exceed 80% of the manufacturer's written recommendations. Depending on the manufacturer, this will result in a maximum allowable deflection of 2° at each bell for a maximum of 4° total deflection with each deflection coupling. Deflection couplings are allowed on AWWA C900 PVC pipe for pipe sizes 4" through 12".

B. Deflection couplings for use with AWWA C905 PVC Pipe shall be submitted to and approved by the City Engineer prior to installation.

PART 3 - EXECUTION

3.1 PIPE LENGTHS

Laying lengths shall be 20-feet with the manufacturer's option to supply up to 15% random (minimum length 10-feet) sections.

No deflections at bells, fittings or of the pipe will be allowed. The use of deflection collars shall be required.

3.2 MARKING

Each pipe length shall be marked showing the nominal pipe size, O.D. base, the AWWA pressure class, and AWWA specification designation in accordance with AWWA C900 Section 2.6 (Marking Requirements).

For potable water application, the pipe shall be white or blue in color and the seal of the testing agency that verified the suitability of the material for such service shall be included.

3.3 EARTHWORK

Excavation and backfill, including the pipe bedding, shall conform to the provisions of Section 02223.

3.4 GENERAL INSTALLATIONS PROCEDURES AND WORKMANSHIP

PVC pressure pipe and fittings shall be installed per AWWA Manual M23 "PVC Pipe-Design and Installation", and as herein specified.

Proper care shall be used to prevent damage in handling, moving, and placing the pipe. Hoist pipe with fork lift or other handling equipment to prevent major damage or shorten its service life. A cloth belt sling or a continuous fiber rope shall be used to prevent scratching the pipe. The pipe shall be lowered and not dropped from the truck. Dropped pipe will be rejected.

Prior to laying the pipe, the bottom of the trench shall be graded and prepared to provide uniform bearing throughout the entire length of each joint of pipe. Bell holes of ample dimension shall be dug in the bottom of the trench at the locations of each joint to facilitate the joining. The trench shall have a flat or semi-circular bottom conforming to the grade to which the pipe is to be laid.

The pipe shall be accurately placed in the trench to the lines and grades on the Plans. Fittings shall be supported independently of the pipe.

3.5 LONGITUDINAL BENDING

Neither Longitudinal bending nor deflection of joints is allowed on AWWA C900 PVC pressure pipe. Deflections less than allowed with standard ductile iron fittings shall be accomplished with the use of deflection couplings designed for use with AWWA C900 PVC pipe. Deflection couplings shall be selected from the District's approved materials list and deflections shall not exceed 80% of the manufacturer's written recommendations. Depending on the manufacturer, this will generally result in a maximum allowable deflection of 2° at each bell for a maximum of 4° total deflection with each deflection coupling. Deflection couplings are allowed on AWWA C900 PVC pipe for pipe sizes 4" through 12". Deflection couplings for larger pipe require the specific approval of the City Engineer.

3.6 PIPE JOINT ASSEMBLY

The spigot and bell shall slide together without displacement of the rubber gasket. The joint shall be dirt free. The best laying practice is with the bell facing in the direction of laying.

Insert the rubber ring into the groove making sure the ring is completely seated. Lubrication of the spigot and instruction of use shall be supplied by the pipe manufacturer.

The spigot shall be inserted into the bell and forced slowly into position by use of a large bar lever and a wood block across the pipe end. For large pipe, a come-along (with padding that will not scratch the pipe) may be used.

3.7 CONCRETE THRUST BLOCKS

Concrete thrust blocks shall be placed as shown on the Plans and shall conform to the requirement of Section 03000. Concrete blocks shall be placed between the undisturbed ground and the fittings to be anchored. Quantity of concrete and the bearing area of the pipe and undisturbed soil shall be as shown on the Plans, unless otherwise determined by the City Engineer. The concrete shall be placed, unless specifically shown otherwise on the Plans, so that the pipe joints and fittings will be accessible to repairs.

3.8 JOINT RESTRAINT SYSTEMS

Joint Restraint Systems shall be installed as shown on the Approved Drawings and in accordance with the manufacturer's recommendations. Joint Restraint Systems may be used in lieu of concrete thrust blocks with permission of the City Engineer.

3.9 PREVENTING FOREIGN MATTER FROM ENTERING THE PIPE

At all times when pipe laying is not in progress, the open end of the pipe shall be closed with a tight-fitting cap or plug to prevent the entrance of foreign matter into the pipe. These provisions shall apply during the noon hour as well as overnight. In no event shall the pipeline be used as a drain for removing water which has infiltrated into the trench. The Contractor shall maintain the inside of the pipe free from foreign materials and in a clean and sanitary condition until its acceptance by the City Engineer.

3.10 LEAKAGE TEST

General: All pipelines shall be tested in accordance with Section 15044, Hydrostatic Testing of Pressure Pipe.

3.11 DISINFECTION

Disinfection shall be in accordance with Section 15041, Testing, Flushing and Disinfection of Piping.

END OF SECTION

SECTION 15066 POLYVINYL CHLORIDE (PVC) WATER TRANSMISSION PIPE AND FITTINGS (AWWA C905)

PART 1 GENERAL

1.1 DESCRIPTION

This section designates the requirements for the manufacture and installation of polyvinyl chloride, abbreviated PVC, water transmission pipe to be furnished and installed by the Contractor at the location and to the lines and grades shown on the Plans as herein specified.

Specifications for related Work are as follows:

AWWA C905	PVC Water Transmission Pipe
ANSI 21.10	Ductile Iron and Gray Iron Fittings
AWWA C110	Ductile Iron and Gray Iron Fittings
AWWA C153	Ductile Iron Compact Fittings
AWWA Manual M23	PVC Pipe Design and Installation

1.2 RELATED WORK DESCRIBED ELSEWHERE

The Contractor shall refer to the following Specification section(s) for additional requirements:

A. Disinfection of Piping: 15041
B. Hydrostatic Testing of Pressure Pipeline: 15044

1.3 SUBMITTALS

The Contractor shall furnish submittals in accordance with Section 2-5.3, of the GENERAL PROVISIONS. Submittals are required for the following:

A. Submit Shop Drawings, material lists, manufacturer's literature and catalog cuts and other information. Materials shall be selected from the Approved Materials list.

B. Submit an affidavit from the pipe manufacturer that all delivered materials comply with the requirements of AWWA C905, the Plans and Specifications.

1.4 PAYMENT

A. Payment for the Work in this section shall be included as part of the lump-sum or unit-price bid amount for which such Work is appurtenant thereto.

B. Payment by the linear foot shall be for each diameter and for each pipe strength designation measured horizontally over the pipe centerline.

PART 2 - MATERIALS

2.1 GENERAL

Material used to produce the pipe shall be made from Class 12454-A or B rigid polyvinyl chloride compounds in accordance with AWWA C905 Section 2.1 (Basic Materials), with an established hydrostatic design basis (HDB) equal to or greater than 4000 psi for water at 73.4 degrees F (23 C). Elastomeric gaskets shall comply with the requirements of AWWA C905 Sections 2.1.3 (Elastomeric Gaskets) and 2.1.4 (Gaskets and Lubricants).

2.2 PIPE

PVC water transmission pipe, 14-inch through 30-inch, shall be manufactured in accordance with AWWA C905, and shall be of the sizes and dimension ratios (DR) shown on the Plans. If a pressure class is called for on the Plans, it shall mean the pressure rating (PR) as defined in AWWA C905. The pipe shall have integral bell and spigot joints with elastomeric gaskets in accordance with AWWA C905 Section 3 (Pipe Requirements). The pipe shall conform with the outside diameter of cast-iron pipe unless otherwise specified and shall conform with the wall thickness of DR series 18 or 25.

2.3 FITTINGS

All fittings for PVC water transmission pipe shall be manufactured in accordance with ANSI A21.10, AWWA C110 or C153. All fittings shall be made of ductile iron and the letters "DI" or "DUCTILE" shall be cast on them, unless otherwise specified. Bell size shall be for Class 165 and Class 235 cast-iron equivalent PVC water transmission pipe, including the rubber-ring retaining groove.

2.4 SERVICE SADDLES

Service connections to 16 inch and larger water transmission pipe shall not be allowed unless specifically called for on the Plans and approved by the City Engineer.

2.5 JOINT RESTRAINT SYSTEMS

Joint Restraint Systems may be used for PVC or ductile-iron pipe when shown on the Approved Plans or with prior approval of the City Engineer. Contractor shall submit shop drawings and catalog data for joint restraint systems in accordance with the General Provisions.

Joint Restraint Systems shall be ductile-iron and shall consist of a split-ring restraint with machined (not cast) serrations on the inside diameter and connecting bolts, and shall be selected from the Approved Materials List.

2.6 DEFLECTION COUPLINGS

Deflection couplings for use with AWWA C905 PVC Pipe shall be submitted to and approved by the City Engineer prior to installation.

PART 3 - EXECUTION

3.1 PIPE LENGTHS

Laying lengths shall be 20-feet with the manufacturer's option to supply up to 15% random (minimum length 10-feet) sections.

3.2 MARKING

Each pipe length shall be marked showing the nominal pipe size, O.D. base, the AWWA pressure class, and AWWA specification designation in accordance with AWWA C905 Section 4.7 (Marking Requirements). The pipe shall be white or blue in color and the seal of the testing agency that verified the suitability of the material for potable water service shall be included.

3.3 EARTHWORK

Excavation and backfill, including the pipe bedding, shall conform to the provisions of Section 02223, Earthwork, and AWWA C905 Section A6 installation.

3.4 GENERAL INSTALLATIONS PROCEDURES AND WORKMANSHIP

PVC water transmission pipe and fittings shall be installed per AWWA Manual M23 "PVC Pipe-Design and Installation", and as herein specified.

Proper care shall be used to prevent damage in handling, moving, and placing the pipe. Hoist pipe with fork lift or other handling equipment to prevent major damage or shorten its service life. A cloth belt sling or a continuous fiber rope shall be used to prevent scratching the pipe. The pipe shall be lowered and not dropped from the truck. Dropped pipe will be rejected.

Prior to laying the pipe, the bottom of the trench shall be graded and prepared to provide uniform bearing throughout the entire length of each joint of pipe. Bell holes of ample dimension shall be dug in the bottom of the trench at the locations of each joint to facilitate the joining. The trench shall have a flat or semi-circular bottom conforming to the grade to which the pipe is to be laid.

The pipe shall be accurately placed in the trench to the lines and grades on the Plans. Fittings shall be supported independently of the pipe.

3.5 LONGITUDINAL BENDING

Neither Longitudinal bending nor deflection of joints is allowed on AWWA C905 PVC pressure pipe. Deflections less than allowed with standard ductile iron fittings may be accomplished with the use of deflection couplings designed for use with AWWA C905 PVC pipe, as allowed by the City Engineer. If allowed, deflections shall not exceed 80% of the manufacturer’s written recommendations.

3.6 PIPE ASSEMBLY

The spigot and bell shall slide together without displacement of the rubber gasket. The joint shall be dirt free. The best laying practice is with the bell facing in the direction of laying.

Insert the rubber ring into the groove making sure the ring is completely seated. Lubrication of the spigot and instruction of use shall be supplied by the pipe manufacturer.

The spigot shall be inserted into the bell and forced slowly into position by use of a large bar lever and a wood block across the pipe end. For large pipe, a come-along (with padding that will not scratch the pipe) may be used.

Combined horizontal and vertical deflections at PVC pipe joints shall not exceed that recommended by AWWA Manual M23 or published recommendations of the manufacturer (the maximum total deflection allowed shall be one and one-half degrees).

3.7 CONCRETE THRUST BLOCKS

Concrete thrust blocks shall be placed as shown on the Plans and shall conform to the requirements of Section 03000. Concrete blocks shall be placed between the undisturbed ground and the fittings to be anchored. Quantity of concrete and the bearing area of the pipe and undisturbed soil shall be as shown on the Plans, unless otherwise determined by the City Engineer. The concrete shall be placed, unless specifically shown otherwise on the Plans, so that the pipe joints and fittings will be accessible to repairs.

3.8 JOINT RESTRAINT SYSTEMS

Joint Restraint Systems shall be installed as shown on the Approved Drawings and in accordance with the manufacturer's recommendations. Joint Restraint Systems may be used in lieu of concrete thrust blocks with permission of the City Engineer.

3.9 PREVENTING FOREIGN MATTER FROM ENTERING THE PIPE

At all times when pipe laying is not in progress, the open end of the pipe shall be closed with a tight-fitting cap or plug to prevent the entrance of foreign matter into the pipe. These provisions shall apply during the noon hour as well as overnight. In no event shall the pipeline be used as a drain for removing water, which has infiltrated into the trench. The Contractor shall maintain the inside of the pipe free from foreign materials and in a clean and sanitary condition until its acceptance by the Owner.

3.10 LEAKAGE TEST

General: All pipelines shall be tested in accordance with the Section 15044, Hydrostatic Testing of Pressure Pipeline.

3.11 DISINFECTION

Disinfection shall be in accordance with Section 15041, Disinfection of Piping.

END OF SECTION

SECTION 15068 HIGH DENSITY POLYETHYLENE (PE 3408) PIPE

PART 1 GENERAL

1.1 DESCRIPTION

This section designates the requirements for the manufacture and installation of high density polyethylene pipe (PE 3408), abbreviated HDPE, to be furnished and installed by the Contractor at the location and to the lines and grades shown on the Plans as herein specified for use as a sanitary sewer force main.

1.2 REFERENCE STANDARDS:

ASTM D 3350
ASTM F 714
ASTM D 3261
ASTM D 2321
ASTM 2837
AWWA C906

1.3 RELATED WORK DESCRIBED ELSEWHERE

The Contractor shall refer to the following Specification section(s) for additional requirements:

A. Trenching, Excavation, Backfilling & Compacting: 02223
B. Hydrostatic Testing of Pressure Pipelines: 15044

1.4 SUBMITTALS

The Contractor shall furnish submittals in accordance with the GENERAL PROVISIONS. Submittals are required for the following:

A. Submit Shop Drawings, material lists, manufacturer's literature and catalog cuts of, but not limited to, the following:

Shop Drawings
Layout Schedule
Special Fitting
Dimensional Checks

Shop Drawings shall be submitted and approved prior to manufacture of special fittings. The layout schedule shall indicate the order of installation, the length and location of each pipe section and special, the station and elevation of the pipe invert at all changes in grade, and all data on curves and bends for both horizontal and vertical alignment.

B. Submit data used by the Contractor in manufacture and quality control.

1.5 QUALITY ASSURANCE

A. The Contractor shall ensure that persons making heat fusion joints have received training in the Manufacturer's recommended procedure. The Contractor shall maintain records of trained personnel, and shall certify that training was received not more than 12 months before commencing construction. Certifications shall be provided to the owner through the submittal process.

B. The pipe and/or fitting manufacturer's production facility shall be open by the owner or his designated agents with a reasonable advance notice. During inspection, the manufacturer shall demonstrate that it has facilities capable of manufacturing and testing the pipe and/or fittings to the standards required by this specification.

1.6 PAYMENT

A. Payment for the Work in this section shall be included as part of the lump-sum or unit-price bid amount for which such Work is appurtenant thereto.

B. Payment by the linear foot shall be for each diameter and for each pipe strength designation measured horizontally over the pipe centerline.

PART 2 MATERIALS

2.1 GENERAL

High Density Polyethylene Pipe (PE 3408) and fittings shall be manufactured in accordance with ASTM F714 shall be of the sizes and DR classes shown on the Plans. Unless otherwise shown on the plans, the pipe shall be DR 17. HDPE shall be grey in color.

The manufacturer shall have quality control facilities capable of producing and assuring the quality of the pipe and fittings required by the reference standards and these specifications. High Density Polyethylene pipe and fittings shall be supplied by the same manufacturer. Pipe and fittings from different manufacturers shall not be interchanged.

2.2 PIPE MATERIAL

Materials used for the manufacture of polyethylene pipe and fittings shall be in accordance with ASTM F714 for PE 3408 high density polyethylene conforming to cell classification 345444C or 345444E per ASTM D 3350; and shall be as listed in the name of the pipe and fitting manufacturer in the Plastic Pipe Institute's Recommended Hydrostatic and Design Stresses for Thermoplastic Pipe and Fittings Compounds, with a standard grade HDB rating of 1600 psi at 73° F. The Manufacturer shall provide a certification that the materials used to manufacture the pipe and fittings meets theses requirements.

Polyethylene pipe shall be manufactured in accordance with ASTM F 714, Polyethylene (PE) Plastic Pipe (SDR-PR) Based on outside diameter, and shall be so marked. Each production lot of pipe shall be tested for (from material or pipe) melt index, density, % carbon, (from pipe) dimensions and ring tensile strength. The results of these tests shall be submitted to the Owner for review.

2.3 FITTINGS

A. Butt Fusion Fittings: Butt Fusion Fittings shall be in accordance with ASTM D3261 and shall be manufactured by injection molding, a combination of extrusion and machining, or fabricated from HDPE pipe conforming to this specification. All fittings shall be pressure rated to provide a working pressure rating no less than that of the pipe. Fabricated fittings shall be manufactured using a McElroy Datalogger to record fusion joints made producing fittings shall be maintained as part of the quality control. The fitting shall be homogenous throughout and free of visible cracks, holes, foreign inclusions, voids, or other injurious defects.

B. Electrofusion Fittings: Electrofusion Fittiings shall be PE3408 HDPE, Cell Classification of 345464C as determined by ASTM D3350-02 and be the same base resin as the pipe. Electrofusion fittings shall not be permitted on sections of pipe that will be subjected to forces associated with the installation process.

C. Flanged and Mechanical Joint Adapters: Flanged and Mechanical Joint Adapters shall be PE 3408HDPE, Cell Classification of 345464C as determined by ASTM D3350-02 and be the same base resin as the pipe. Flanged and mechanical joint adapters shall have a manufacturing standard of ASTM D3216. All adapters shall be pressure rated to provide a working pressure rating no less than that of the pipe. Flange adapters shall be made with sufficient through-bore length to be clamped in a butt fusion joining machine without the use of a stub-end holder.

D. Mechanical Restraint: Mechanical Restraint for HDPE may be provided by mechanical means separate from the mechanical joint gasket sealing gland. The restrainer shall provide wide, supportive contact around the full circumference of the pipe and be equal to the listed widths. Means of restraint shall be machined serrations on the inside surface of the restrainer equal to or greater than the listed serrations per inch and width. Loading of the restrainer shall be by a ductile iron follower that provides even circumferential loading over the entire restrainer. Design shall be such that restraint shall be increased with increases in line pressure.

Serrated restrainer shall be ductile iron ASTM A536-80 with a ductile iron follower; bolts and nuts shall be corrosive resistant, high strength quality alloy steel.

The restrainer shall have a pressure rating of, or equal to that of the pipe on which it is used or 150 PSI whichever is lesser. Restrainers shall be JCM Industries, Sur-Grip or pre-approved equal.

Nominal Size	Restraint Width	Serrations per inch
14”, 16”, 18”	5”	6
20”, 24”	7”	6

Pipe stiffeners shall be used in conjunction with restrainers. The pipe stiffeners shall be designed to support the interior wall of the HDPE. The stiffeners shall support the pipe’s end and control the “necking down” reaction to the pressure applied during normal installation. The pipe stiffeners shall be formed of 304 or 316 stainless steel to the HDPE manufacturers published average inside diameter of the specific size and DR of the HDPE. Stiffeners shall be by JCM Industries or pre-approved equal.

2.4 COMPLIANCE TESTS

The manufacturer's production facilities shall be open for inspection by the owner or his Authorized Representative. The manufacturer's inspection and testing shall comply with applicable ASTM standards, a list of the inspection certifications and test certifications shall be submitted prior to the shop drawing submittal for the HDPE pipe itself. The list shall be submitted as a shop drawing. In case of conflict with Manufacturer's certifications, the Contractor, the Engineer, or the Owner may request retesting by the manufacturer or have retests performed by an outside testing service. All failed retesting shall be paid for by the manufacturer.

PART 3 - EXECUTION

3.1 GENERAL

High Density Polyethylene pipe and fittings shall be handled, assembled and installed in accordance with the applicable sections of AWWA C906 for PE 3408, ASTM D 2321, manufacturer's recommendations and as specified herein.

3.2 EXCAVATION

A. Excavation and backfill, including the pipe bedding, shall conform to the provisions of Section 02223 except as herein modified.

B. Crushed Rock and Gravel shall comply with Section 200-1.2 SSPWC.

C. Pipe Bedding: 3/8" Crushed rock aggregate shall be used for pipe bedding and shall be compacted to obtain a relative density of 95-percent unless otherwise specified. The thickness of the pipe bedding shall be a minimum of four inches. The pipe bedding shall be placed over the full width of the trench.

D. Backfill Within Pipe Zone: Crushed rock shall be placed and compacted within the pipe zone from the bottom of the pipe to one foot above top of pipe. The crushed rock shall be compacted to obtain a relative density of 95-percent unless otherwise specified.

3.3 PIPE HANDLING

The manufacturer's written procedures for unloading, inspection and handling of the HDPE pipe shall be adhered to by the Contractor. A copy of these Manufacturer's written procedures shall be submitted as a shop drawing and included with the shop drawings for the pipe material.

When lifting with slings, only wide fabric choker slings capable of safely carrying the load, shall be used to lift, move, or lower pipe and fittings. Wire rope or chain shall not be used. Slings shall be of sufficient capacity for the load, and shall be inspected before use. Worn or damaged equipment shall not be used.

3.4 JOINING

Polyethylene pipe and fittings may be joined together or to other materials by means of flanged connections, mechanical couplings designed for joining polyethylene pipe or for joining polyethylene pipe to another material or electro fusion, as shown on the approved plans or as approved by the City

Engineer. The installation instructions of the joining device manufacturer shall be strictly followed when joining by other means is performed.

A. Butt Fusion: Sections of polyethylene pipe should be joined into continuous lengths on the jobsite above ground. The joining method shall be the butt fusion method and shall be performed in strict accordance with the pipe manufacturer's recommendations. The butt fusion equipment used in the joining procedures should be capable of meeting all conditions recommended by the pipe manufacturer, including but not limited to, temperature requirements of 400 degrees Fahrenheit, alignment, and an interfacial fusion pressure of 75 PSI. The butt fusion joining will produce a joint weld strength equal to or greater than the tensile strength of the pipe itself. All field welds shall be made with fusion equipment equipped with McElroy Data Logger. Temperature, fusion pressure and a graphic representation of the fusion cycle shall be part of the quality control records. Interior bead from butt fusion welds shall be removed.

B. Sidewall Fusion: Sidewall fusions for connections to outlet piping shall be performed in accordance with HDPE pipe and fitting manufacturer's specifications. The heating irons used for sidewall fusion shall have an inside diameter equal to the outside diameter of the HDPE pipe being fused. The size of the heating iron shall be ¼ inch larger than the size of the outlet branch being fused.

C. Mechanical: Bolted joining may be used where the butt fusion method cannot be used. Flange joining will be accomplished by using HDPE flange adapter with a ductile iron back-up ring. Mechanical joint joining will be accomplished using either a molded mechanical joint adapter or the combination of a Sur-Grip Restrainer and Pipe Stiffener as manufactured by JCM Industries, Inc. Either mechanical joint joining method will have a ductile iron mechanical joint gland.

D. Other: Socket fusion, hot gas fusion, threading solvents, and epoxies may not be used to join HDPE pipe.

3.5 PREVENTING FOREIGN MATTER FROM ENTERING THE PIPE

At all times when pipe laying is not in progress, the open end of the pipe shall be closed with a tight-fitting cap or plug to prevent the entrance of foreign matter into the pipe. These provisions shall apply during the noon hour as well as overnight. In no event shall the pipeline be used as a drain for removing water which has infiltrated into the trench. The Contractor shall maintain the inside of the pipe free from foreign materials and in a clean and sanitary condition until its acceptance by the Engineer.

3.6 DAMAGED PIPE OR FITTINGS

Sections of pipe having been discovered with cuts or gouges in excess of 1/8-inch thickness shall be cut out and removed. The undamaged portions of the pipe shall be rejoined using the heat fusion joining method.

3.7 TESTING

A. Butt Fusion Testing

On every day butt fusions are made, the first fusion of the day shall be a trial fusion. The trial fusion shall be cooled completely, then fusion test straps shall be cut. The test strap shall be 12-inch (min.) or 30 times the wall thickness in length with the fusion in the center, and 1-inch (min.) or 1.5 times the wall thickness in width. Bend the test strap until the ends of the strap touch. If the fusion fails at the joint, a new trial fusion shall be made, cooled completely and tested. Butt fusion of the pipe to be installed shall not commence until a trial fusion has passed the bent strap test.

B. Pressure Testing

All pipelines shall be flushed and tested in accordance with Section 15044 and the applicable provisions of AWWA C600, except as modified herein.

C. Allowable Leakage

There will be no leakage allowed for the butt fused portions of the pipeline.

END OF SECTION

SECTION 15074 BLOW-OFF ASSEMBLIES

PART 1 GENERAL

1.1 DESCRIPTION

This section includes materials, testing, and installation of blowoff assemblies.

1.2 RELATED WORK SPECIFIED ELSEWHERE

CMWD Standard Drawings
CMWD Standard Specifications 09900, 15000, 15041, 15044, 15056, 15057, 15061, 15064, and 15100

1.3 SERVICE APPLICATION

A. Blowoff assemblies shall be installed on potable and recycled water mains.

B. Blowoff assemblies shall be sized and located as shown on the Approved Plans. In general, blowoff assemblies will be installed at low points of pipelines as shown below:

1. 2" blowoff assemblies or multiple 2” blowoff assemblies will be required on pipelines 4”, thru 12”.

2. 4" blowoff assemblies will be required on pipeline sizes 12” thru 16".

3. 6" blowoff assembly will be required on pipeline sizes 18" and larger.

1.4 WARNING/IDENTIFICATION TAPE

Warning/Identification Tape shall be installed for blowoff assemblies in accordance with Section 15000.

PART 2 MATERIALS

2.1 GENERAL

Blowoff assemblies and appurtenant components and materials shall be selected from the Approved Materials List.

2.2 CONCRETE

Concrete thrust or anchor blocks shall be placed as shown on the approved plans in accordance with Section 03000.

2.3 WARNING/IDENTIFICATION TAPE

Warning/Identification tape materials shall be in accordance with Section 15000 and the Approved Materials List.

2.4 FIELD PAINTING AND COATING

Field painting and coating materials shall be in accordance with Section 09900 and the Approved Materials List.

PART 3 EXECUTION

3.1 INSTALLATION

A. Blowoff assemblies shall be installed at locations shown on the Approved Plans or as directed by the District Engineer in accordance with the Standard Drawings.

B. Blowoff assemblies shall be connected to water mains no closer than 24" to a bell, coupling, joint or fitting.

C. Locations of blowoff assembly shall be in accordance with the Standard Drawings.

3.2 CONCRETE

Concrete thrust or anchor blocks shall be placed as shown on the Approved Plans in accordance with Section 03000.

3.3 WARNING/IDENTIFICATION TAPE

Warning/Identification Tape shall be installed in accordance with Section 15000 and the Standard Drawings.

3.4 DISINFECTION OF BLOWOFF ASSEMBLIES

Blowoff assemblies shall be disinfected in accordance with Section 15041 in conjunction with disinfecting the main to which it is connected. Blowoff assembly valves shall be operated and the assembly shall be flushed to completely disinfect all internal parts.

3.5 HYDROSTATIC TESTING

Blowoff assemblies shall be hydrostatically tested in accordance with Section 15044 in conjunction with hydrostatically testing the pipeline to which it is connected.

END OF SECTION

SECTION 15092 MISCELLANEOUS COUPLINGS, PIPE AND APPURTENANCES

PART 1 GENERAL

1.1 DESCRIPTION

All valves, couplings, and appurtenances shall conform to requirements of the standard dimensions and pressure classification of the immediately adjacent pipe, valve or appurtenance as specified.

1.2 RELATED WORK DESCRIBED ELSEWHERE

The Contractor shall refer to the following Specification section(s) for additional requirements:

A. Painting and Coating: 09900
B. Petrolatum Wax Tape Coating: 09902

1.3 SUBMITTALS

Contractor shall furnish submittals in accordance with the requirements of Section 2-5.3 of the GENERAL PROVISIONS. The following submittals are required:

A. Submit Shop Drawings for all miscellaneous couplings, pipe and appurtenances. Shop Drawings shall include listing of materials of construction, with ASTM reference and grade, including lining and paint coating intended for use, with lining and coating manufacturers' and paint numbers listed.

1.4 PAYMENT

Payment for the Work in this section shall be included as part of the lump-sum or unit-price bid amount for which such Work is appurtenant thereto.

PART 2 - MATERIALS

2.1 GASKETS, NUTS, AND BOLTS

Gaskets for flanged joints shall be "drop-in" type asbestos composition sheet packing, graphited on both sides, "drop-in" type, conforming to the requirements of ANSI B16.21 and shall be as manufactured by Crane Co., Garlock or approved equal.

Bolts and studs for aboveground installations shall be cadmium plated and shall conform to ASTM A307, Grade B, "Steel Machine Bolts and Nuts and Tap Holes," when a ring gasket is used and shall conform to either ASTM A261, "Heat-Treated Carbon Steel Bolting Material" or ASTM A193, "Alloy-Steel Bolting Material for High Temperature Service," when a full-face gasket is used. Bolts and nuts shall be heavy hexagon series. Nuts shall conform to ASTM A194, "Carbon and Alloy Steel Nuts for Bolts for High Pressure and High Temperature Service" either in Grade 1, 2 or 2H. The fit shall be ANSI B1.1, "Unified Screw Threads," Class 2, except that Class 3 fit shall be used in holes tapped for studs. Threads may be made by either cutting or cold forming.

Between 1/4-inch and 3/8-inch shall project through the nut when drawn tight. Washers shall be provided for each nut and shall be the same material as each nut. All buried flanges, including bolts, nuts and washers, shall be encased in wax tape per Section 09902.

All bolt threads shall be lubricated with non-oxide grease. Flanged faces shall be wire brushed and cleaned prior to joining each flange.

2.2 WAX TAPE COATING

Unless otherwise specified on the Plans, all couplings and appurtenances for underground installation shall be encased in wax tape per Section 09902 and the City Standard Drawings.

2.3 PAINTING AND COATING

All miscellaneous couplings, pipe and appurtenances referenced in this section shall be painted and coated, interior and exterior, in accordance with Section 09900, Painting and Coating.

2.4 FLEXIBLE COUPLINGS

Joints for which flexible couplings are required, shall be selected from the Approved Materials list. Gaskets shall be plain rubber gaskets. Threads on bolts of compression collars shall be lubricated with non-oxide grease before assembling the coupling.

2.5 PIPE UNIONS

Screw unions may be employed on pipelines 2-1/2-inches in diameter and smaller. Pipes and fittings made of non-ferrous metals shall be isolated from ferrous metals by nylon insulating pipe bushings, unions or couplings manufactured by Smith-Blair, Pipe Seal and Insulator Co. or approved equal.

PART 3 - EXECUTION (Not Applicable)

END OF SECTION

SECTION 15099 PROCESS VALVES, REGULATORS AND MISCELLANEOUS VALVES

PART 1 GENERAL

1.1 DESCRIPTION

This section includes materials, testing and installation of manually operated process valves such as check valves, pressure control valves, pressure reducing valves and ball valves.

1.2 REFERENCE STANDARDS

The publications listed below form part of this specification to the extent referenced and are referred to in the text by the basic designation only. Reference shall be made to the latest edition of said standards unless otherwise called for.

American Water Works Association
AWWA C508 Standards for Swing Check Valve
ASTM B62 Standards for Ball Vales

1.3 RELATED WORK SPECIFIED ELSEWHERE

CMWD Standard Drawings
CMWD Specification Sections 09900, 15000, 15041, 15044, 15057, 15074, 15108, and 15112

1.4 SERVICE APPLICATIONS

Check valves, pressure control valves, pressure reducing valves, bronze gate valves and ball valves are primarily used in the installation of potable and recycled water main appurtenances and where called for on the Approved Plans and indicated on the Standard Drawings.

1.5 SUBMITTALS

The following items shall be submitted to the City for review and approval prior to ordering or delivery of valves per Section 2-5.3 of the GENERAL PROVISIONS.

A. The valve manufacturers catalog data showing the size to be used, valve dimensions, pressure rating and materials of construction.

B. Manufacturers catalog data and proof of NSF certification on the lining materials to be used.

C. Installation procedures including field adjustments as required.

1.6 SIZING OF VALVES

Valves shall be the same size as the appurtenance in which they are to be installed with unless otherwise called for on the Approved Plans or indicated on the Standard Drawings.

1.7 VALVE ENDS

Valve ends shall be compatible with the piping system or appurtenance in which they are to be installed or as called for on the Approved Plans or indicated on the Standard Drawings.

1.8 DELIVERY, STORAGE AND HANDLING

Valves shall be delivered and stored in accordance with the manufacturer's recommendations. Valves shall remain in factory packaging until ready for installation. Valves shall not be stored in contact with bare ground.

1.9 POLYETHYLENE WRAP

Polyethylene wrap shall be used for the buried installation of valves in accordance with Section 15000.

1.10 GATE WELLS AND EXTENSION STEMS

Valve boxes and extension stems shall be installed in accordance with Section 15000 and the Standard Drawings.

PART 2 MATERIALS

2.1 RUBBER-FLAPPER SWING CHECK VALVE

A. Swing check valves and appurtenant components shall be in accordance with AWWA C508 and selected from the Approved Materials List. A submittal will be required as described in this Section.

B. Rubber-flapper swing check valves shall have a heavily constructed ductile-iron body and cover. The body shall be long pattern design (not wafer), with integrally cast-on end flanges. The flapper shall be Buna-N having an "O" ring seating edge and be internally reinforced with steel.

C. Flapper shall be captured between the body and the body cover in a manner to permit the flapper to flex from closed to full open position during flow through the valve. Flapper shall be easily removed without need to remove valve from line. Check valves shall have full pipe size flow area. Seating surface shall be on a 45º angle requiring the flapper to travel only 35º from closed to full open position, for minimum head loss and non-slam closure.

D. Buna-N flapper shall be high-strength coated fabric, coated both sides with 70 DURO, which creates an elastic spring effect, molded internally, to assist the flapper to close against a slight head to prevent slamming. When essential to create backflow through the check valve, as directed by the City Engineer, an external backflow device shall be furnished.

E. Valve ends shall be flanged ductile-iron in accordance with Section 15056 unless otherwise called for on the Approved Plans or directed by the City Engineer.

F. Check valves shall be tested by the manufacturer and the test results shall be approved by the City Engineer prior to shipment to the project. Check valves must unseat at a head no greater than 24".

2.2 SMALL DIAMETER ISOLATING VALVES

Provide all small diameter valves and cocks for shut-off process connections, instrumentation and other miscellaneous uses in accordance with the Approved Plans. These valves shall be of the same material and pressure rating as the adjacent process piping. Shutoff valves shall be compatible with instrumentation and other equipment in accordance with the manufacturer's recommendations.

2.3 CORPORATION STOPS

Corporation stops shall be in the ball type with a bronze body and T-Head operator. Valve ends shall be compatible with the piping system in which they are being installed or as called for on the Approved Plans or indicated on the Standard Drawings. Corporation stops shall be rated for a minimum pressure of 1,379 KPa (200 psi). Corporation stops shall be selected from the Approved Materials List.

2.4 ANGLE METER STOPS

Angle meter stops shall be the ball type with a bronze body and 90º lock wing. Valve ends shall be flare style inlet and swivel meter nut for 1" and meter flange for 2" outlets. Angle meter stops shall be rated for a minimum pressure of 1,379 KPa (200 psi). Angle meter stops shall be selected from the Approved Materials List.

2.5 CUSTOMER METER SHUT-OFF VALVE

Customer meter shut-off valves shall be the ball type with a bronze body and lever handle operator. Valve ends shall be swivel meter nut for 1" inlets and meter flange for 2" inlets. Customer meter shut-off valves shall be rated for a minimum pressure of 200 psi. The City Engineer may require the use of a customer meter shut-off valve equipped with a 90º lock wing.

2.6 BALL VALVES

Ball valves 2" and smaller shall be of bronze construction conforming to ASTM B62 and equipped with a T-Head or lever handle operator as required. Valve ends shall be compatible with the piping system in which they are being installed or as indicated on the Approved Plans or Standard Drawings. Ball valves shall be rated for a minimum pressure of 1,379 KPa (200 psi). Ball valves shall be selected from the Approved Materials List.

2.7 BACKFLOW PREVENTERS

Backflow preventers shall be in accordance with Section 15112 and selected from the Approved Materials List.

2.8 POLYTHYLENE WRAP

Polyethylene wrap shall be in accordance with Section 15000 and selected from the Approved Materials List.

2.9 GATE WELLS AND EXTENSION STEMS

Gate wells and extension stems for buried valves shall be in accordance with Section 15000 and selected from the Approved Materials List.

PART 3 EXECUTION

3.1 INSTALLATION

A. Valves shall be set in true alignment straddling the centerline of pipe with the valve operator in the vertical position unless otherwise noted on the Approved Plans or shown on the Standard Drawings.

B. Valves shall be installed in accordance with the manufacturer's recommendations and the applicable section of these specifications for the piping material and joint type being used.

C. Aboveground valves shall be rigidly held in place using supports and hangers in accordance with the Approved Plans and Standard Drawings. The stem orientation of valves in elevated piping shall be as approved by the City Engineer for accessibility, except that no valves shall be installed with stems aligned below horizontal. Saddle type valve supports shall be provided. Supports shall be of rugged construction providing at least one hundred twenty degrees (120º) under support for the valve body. Valve supports shall be constructed of steel, and shall be anchored to the foundations using stainless steel anchor bolts.

3.2 POLYETHYLENE WRAP

Installation of polyethylene wrap for buried valves shall be in accordance with Section 15000.

3.3 GATE WELLS AND EXTENSION STEMS

Gate wells and extension stems for buried valves shall be in accordance with Section 15000 and the Standard Drawings.

3.4 DISINFECTION OF THE VALVES

Disinfection and flushing shall be in accordance with Section 15041, as part of the progress of disinfecting the main pipeline. The valves shall be operated during the disinfection period to completely disinfect all internal parts.

3.5 HYDROSTATIC TESTING

Valves shall be hydrostatically tested in conjunction with the pipelines in which they are installed in accordance with Section 15044.

END OF SECTION

SECTION 15100 RESILIENT WEDGE GATE VALVES (RWGV's)

PART 1 GENERAL

1.1 DESCRIPTION

This section includes materials, testing, and installation of manually operated resilient wedge gate valves (RWGV's).

1.2 REFERENCE STANDARDS

The publications listed below form part of this specification to the extent referenced and are referred to in the text by the basic designation only. Reference shall be made to the latest edition of said standards unless otherwise called for.

1.3 RELATED WORK SPECIFIED ELSEWHERE

CMWD Standard Drawings
CMWD Standard Specifications 15000, 15041, 15044, 15056, 15057, 15061, 15064, 15074, 15108 and 15112

1.4 SERVICE APPLICATION

A. Resilient wedge gate valves (RWGV's) shall be installed on potable and recycled water mains and appurtenances in accordance with the Approved Plans and the Standard Drawings.

B. Resilient wedge gate valves shall be used for open/closed operations, throttling service and frequent operation after long periods of no actuation.

C. In general, resilient wedge gate valves shall be used when valves are required on pipelines and appurtenances 4" through 16".

D. Valves for pipelines sized 18" and larger generally require the use of butterfly valves (BFV) in accordance with Section 15102.

E. All valves shall be of at least the same pressure class as the adjoined pipe.

1.5 SUBMITTALS

The following items shall be submitted for review and approval per Section 2-5.3, prior to ordering or delivery of resilient wedge gate valves.

A. An affidavit from the valve manufacturer stating that valves have successfully passed hydrostatic tests in accordance with AWWA C509 and manufacturer's own coatings tests.

B. The valve manufacturer's catalog data showing the size to be used, valve dimensions, pressure rating and materials of construction.

C. Manufacturer's catalog data and proof of NSF certification for the lining materials to be used.

1.6 SIZING OF VALVES

Valves shall be the same size as the line in which they are installed unless otherwise noted on the Approved Plans.

1.7 VALVE ENDS

Valve ends shall be compatible with the piping system in which they are being installed in accordance with the Approved Plans or directed by the City Engineer.

Ductile-iron flanges shall be in accordance with Section 15056.

1.8 VALVE TESTING

Resilient wedge gate valves shall be hydrostatically tested and valve coatings shall be holiday detected prior to shipment to the field in accordance with the testing procedures shown in Appendix A. Valves delivered to the site prior to successful hydrostatic testing and holiday detection shall be subject to rejection.

1.9 DELIVERY, STORAGE AND HANDLING

Valves shall be delivered and stored in accordance with AWWA C550. The port openings shall be covered with plastic, cardboard or wood while in transit and during storage in the field. These covers shall remain in place until valves are ready to be installed. Valves shall not be stored in contact with bare ground. Valves shall not be stacked.

1.10 CORROSION PROTECTION

Buried Valves: All bolted connections and bolted valve components (bonnets, flanges, etc.) shall be coated with Wax Tape in accordance with Section 09902 and the entire valve encased in polyethylene in accordance with Section 15000.

PART 2 MATERIALS

2.1 RESILIENT WEDGE GATE VALVES (RWGV's)

A. Resilient wedge gate valves and appurtenant components and materials shall be selected from the Approved Materials List.

B. RWGV's shall be ductile-iron in accordance with AWWA C509 and C515 except as modified herein.

C. Each valve shall have a smooth unobstructed waterway free from any sediment pockets.

D. All RWGV's shall be leak-tight at their rated pressure.

E. RWGV's shall have a non-rising low-zinc bronze or stainless steel stem, opened by turning left (counterclockwise).

F. Stem seals shall be the O-ring type incorporating a minimum of two rings as required by AWWA C509.

G. Low-friction torque-reduction thrust washers or bearings shall be provided on the stem collar.

H. Wedge (gate) shall be fully encapsulated with a bonded-in-place Nitrile elastomer covering. Minimum thickness of the rubber seating area shall be 1/4".

I. Valves for buried applications shall be provided with a 2" square operating nut, and valves located above ground or in structures shall be equipped with a hand wheel in accordance with AWWA C509 unless otherwise indicated on the Approved Plans.

J. RWGV interior and exterior surfaces (except for the encapsulated disc) shall be coated as described below.

K. All bolts and nuts used in the construction of RWGV's shall be Type 316 stainless steel.

2.2 EPOXY LINING AND COATING

Epoxy linings and coatings for valves shall be provided in accordance with AWWA C210, C213, and C550, with the following modifications:

A. Epoxy lining and coating of valve surfaces shall be performed by the manufacturer in a facility with qualified personnel, where the environment can be controlled. Epoxy lining and coating of valves in the field is prohibited.

B. Repairs made to manufactures applied coatings shall be performed in a facility with qualified personnel, where the environment can be controlled. The facility shall be approved by the valve manufacturer.

C. Surface preparation shall be as detailed in SSPC-SP5, White-Metal Blast Cleaning.

D. Liquid epoxy lining and coating materials shall be listed in the NSF Listing for Drinking Water Additives, Standard 61, certified for use in contact with potable water.

E. The minimum dry film thickness for epoxy linings shall be 0.008". Liquid epoxy lining shall be applied in two (2) coats in accordance AWWA C210.

F. Powder epoxy coating materials shall contain one hundred percent (100%) solids, in accordance with AWWA C213.

2.3 GATE WELLS AND EXTENSION STEMS

Gate wells and extension stems for buried valves shall be in accordance with Section 15000 and selected from the Approved Materials List.

2.4 CONCRETE

Concrete used for anchor or thrust blocks shall be Class 560-C-3250 as specified in section 03000.

2.5 WAX TAPE COATING

Wax Tape shall be in accordance with Section 09902 and selected from the Approved Materials List.

2.6 POLYETHYLENE ENCASEMENT

Polyethylene encasement shall be in accordance with Section 15000 and selected from the Approved Materials List.

PART 3 EXECUTION

3.1 INSTALLATION

A. Install valves with the bolt holes straddling the vertical centerline of pipe and the operating nut in the vertical position unless otherwise noted on the Approved Plans.

B. Valves shall be installed in accordance with the manufacturer's recommendations and the applicable section of these specifications for the piping material and joint type being used.

C. Joints shall be cleaned and installed in accordance with Section 15056.

3.2 CORROSION PROTECTION

Buried Valves: All bolted connections and bolted valve components (bonnets, flanges, etc.) shall be coated with Wax Tape in accordance with Section 09902 and the entire valve encased in polyethylene in accordance with Section 15000.

Exposed Valves: The exterior of valves installed above ground or exposed in vaults or enclosures shall be field painted in accordance with Section 09900.

3.3 CONCRETE

Concrete thrust, anchor, and support blocks shall be installed in accordance the Standard Drawings. The concrete shall be placed so that valves and valve operators will be accessible for repairs or replacement.

3.4 GATE WELLS AND EXTENSION STEMS

Gate wells and extension stems for buried valves shall be installed in accordance with Section 15000 and the Standard Drawings.

3.5 DISINFECTION OF VALVES

Disinfection and flushing of valves shall be in accordance with Section 15041, as part of the process of disinfecting the main pipeline. The valves shall be operated during the disinfection period to completely disinfect all internal parts.

3.6 HYDROSTATIC TESTING

Valves shall be hydrostatically tested in conjunction with the pipeline in which they are installed in accordance with Section 15044.

END OF SECTION

SECTION 15102 BUTTERFLY VALVES (BFV's)

PART 1 GENERAL

1.1 DESCRIPTION

This section includes materials, testing, and installation of manually operated butterfly valves (BFV).

1.2 REFERENCE STANDARDS

The publications listed below form part of this specification to the extent referenced and are referred to in the text by the basic designation only. References shall be made to the latest edition of said standards unless otherwise called for.

American Water Works Association (AWWA)
C504 Standards for Rubber–Seated Butterfly Valves

1.3 RELATED WORK SPECIFIED ELSEWHERE

CMWD Standard Drawings
CMWD Standard Specifications 09900, 15000, 15041, 15044, 15056, 15061 and 15064

1.4 SERVICE APPLICATION

A. Butterfly valves (BFV) shall be installed on potable and recycled water mains and appurtenances where shown on the Approved Plans and in accordance with the Standard Drawings.

B. Butterfly valves shall be used for open/closed operations and throttling service and frequent operation after long periods of inactivity.

C. In general, butterfly valves shall be used when valves are required on pipelines 18" and larger and where the use of a motor-operated valve is required as shown on the Approved Plans. Butterfly valves smaller than 18" shall only be used as indicated on the Approved Plans or with the prior approval of the City Engineer.

D. Valves for pipelines sized 16" and smaller generally require resilient wedge gate valves (RWGV's) in accordance with Section 15100.

E. All valves shall be of at least the same pressure class as the adjoined pipe.

1.5 SUBMITTALS

A. Submittals are required per Section 2-5.3 including an affidavit from the valve manufacturer showing the following:

1. Actuators used were furnished and installed by the valve manufacturer.

2. Valves have successfully passed hydrostatic testing per AWWA C504 and coatings testing by the valve manufacturer.

B. The valve manufacturer's catalog data showing the size to be used, valve dimensions, pressure rating and materials of construction.

C. Actuator manufacturer's catalog data and detail construction sheets showing the dimensions, materials, number of turns, and required torque input of the actuator to be used.

D. Manufacturer's catalog data and proof of NSF certification on the lining materials to be used.

1.6 SIZING OF VALVES

Valves shall be the same size as the line in which they are installed unless otherwise shown on the Approved Plans.

1.7 VALVE ENDS

Valve ends shall be flanged ductile-iron unless otherwise called for on the Approved Plans or as directed by the City Engineer.

Ductile-iron flanges shall generally be in accordance with AWWA C115, rated at a working pressure of 1,724 KPa (250 psi). When Class 250 butterfly valves are shown on the Approved Plans or are otherwise required, ductile-iron flanges shall be compatible with AWWA C207, Class "F".

Maximum working pressure of the flange shall be as specified in AWWA or ASME/ANSI. Flanges shall be integrally cast per AWWA C110.

1.8 VALVE TESTING

Butterfly valves shall be hydrostatically tested and coatings holiday detected prior to shipment to the field. Valves delivered to the site prior to successful hydrostatic testing and holiday detection will be subject to rejection.

1.9 DELIVERY, STORAGE AND HANDLING

Valves shall be delivered and stored in accord with AWWA C504 and AWWA C550. The port openings shall be covered with plastic, cardboard or wood while in transit and during storage in the field. These covers shall remain in place until the valve is ready to be installed. Valves shall not be stored in contact with bare ground. Valves shall not be stacked.

1.10 CORROSION PROTECTION

Buried Valves: All bolted connections and bolted valve components shall be coated with Wax Tape in accordance with Section 09902 and the entire valve encased in polyethylene in accordance with Section 15000.

PART 2 MATERIALS

2.1 BUTTERFLY VALVES (BFV)

A. Butterfly valves and appurtenant components and materials shall be selected from the Approved Materials List.

B. Butterfly valves shall be short body, leak-tight closing, and rubber-seated in accordance with AWWA C504 except as modified herein.

C. Except as modified below, BFV's shall be Class 150B in accordance with AWWA C504, rated for a flow velocity of 16 ft/s.

D. Where the static pressure of the pipeline in which the BFV is to be installed exceeds 1.03 Pa (150psi), a Class 250B butterfly valve in general conformance with AWWA C504 shall be required. Class 250B butterfly valves shall be submitted to the Engineer for approval prior to ordering or delivery.

E. Butterfly valves shall open by turning left (counterclockwise). Valve disc shall rotate ninety degrees (90º) from the full open position to the tight shut position.

F. Butterfly valve interior and exterior surfaces shall be coated as described below.

2.2 MANUAL VALVE ACTUATORS

A. General:

1. All valve actuators shall be watertight, designed for buried or submerged uses. Actuators shall be fully gasketed, sealed, and factory packed with grease.

2. As directed by the City Engineer, actuators for valves located above ground or in vaults and structures may have hand wheels or chain wheels. Minimum hand wheel diameter shall be 12"). The actuator shall be equipped with a dial indicator, which shows the position of the valve disc. The City Engineer may require the use of 2" square operating nuts in some cases.

3. Actuators for valves shall be provided with a 2" square-operating nut when buried or when indicated on the Approved Plans.

4. Actuators shall have travel stops, which can be adjusted in the field without having to remove the actuator from the valve.

5. Actuators shall be sized for opening and closing the valve at the valve's full rated working pressure and at a flow velocity of 16 ft/s.

6. Actuators shall accept a minimum of 300 foot-pounds of input torque at the full open and full closed positions without damage to the actuator or the valve.

7. Actuators equipped with 2" operator nuts shall require a maximum input torque of 150 foot-pounds to operate the valve. A maximum input torque of 80 foot-pounds shall be required to operate valves with hand wheels.

8. Actuators shall be of the same manufacturer as the valve where possible or as directed by the City Engineer.

9. Actuators shall be installed, adjusted, tested and certified by the valve manufacturer prior to shipping.

10. Actuators shall require a maximum of one hundred (100) input turns for the complete ninety-degree (90º) movement of the disc.

11. Actuators shall receive an epoxy coating on the exterior surface as described below.

B. Traveling Nut Actuators:

1. Actuators for butterfly valve sizes 18" through 24" may be the manual traveling nut type. Traveling nut actuators shall not be used on valves requiring motor driven actuators or where the City has specified a worm gear type actuator.

2. Actuators shall be capable of producing the below listed output torque at the closed position:

Valve Size in mm (inches)	Output Torque Nm (foot-pounds)
450 (18")	3729 (2750)
500 (20")	3729 (2750)
600 (24")	6372 (4700)

C. Worm Gear Type Actuators:

1. Actuators for butterfly valve 30" or larger shall be the worm gear type. In addition, worm gear type actuators shall be used on butterfly valves requiring motor driven actuators or where the City has specified a worm gear actuator.

2. Worm gear actuators shall be totally enclosed and self-locking.

2.3 EPOXY LINING AND COATING

Epoxy linings and coatings for valves and actuators shall be provided in accordance with AWWA C210, C213 and C550, with the following modifications:

A. Epoxy lining and coating of valve surfaces shall be performed by the manufacturer in a facility with qualified personnel, where the environment can be controlled. Epoxy lining and coating of valves in the field is prohibited.

B. Repairs made to shop-applied coatings shall be performed in a facility with qualified personnel, where the environment can be controlled. The facility shall be one that is approved by the valve manufacturer.

C. Surface preparation shall be as detailed in SSPC-SP5 White Metal Blast Cleaning.

D. Liquid epoxy lining and coating materials shall be listed in the NSF Listing for Drinking Water Additives, Standard 61, certified for use in contact with potable water.

E. The minimum dry film thickness for epoxy linings shall be 0.008". Liquid epoxy lining shall be applied in two (2) coats in accordance with AWWA C210.

F. Powder epoxy coating materials shall contain one hundred percent (100%) solids, in accordance with AWWA 213.

2.4 GATE WELLS AND EXTENSION STEMS

Gate wells and extension stems for buried valves shall be in accordance with Section 15000 and the Approved Materials List.

2.5 CONCRETE

Concrete used for anchor or thrust blocks shall be Class 560-C-3250 as specified in section 03000.

2.6 WAX TAPE COATING

Wax Tape shall be provided in accordance with Section 09902 and the Approved Materials List.

2.7 POLYETHYLENE ENCASEMENT

Polyethylene encasement shall be provided in accordance with Section 15000 and selected from the Approved Materials List.

PART 3 EXECUTION

3.1 INSTALLATION

A. Install valves with the bolt holes straddling the vertical and horizontal centerlines of pipe, with the operating nut in the vertical position, unless otherwise noted on the Approved Plans.

B. Valves shall be installed per the manufacturer's recommendation in accordance with the applicable specification for the piping material and joint type being used for the valve and the water main.

C. Joints shall be cleaned and installed in accordance with Section 15056.

3.2 FLANGE INSULATING KITS

Flange insulating kits shall be installed where shown on the Approved Plans in accordance with Standard Drawing.

3.3 CORROSION PROTECTION

Buried Valves: All bolted connections and bolted valve components shall be coated with Wax Tape in accordance with Section 09902 and the entire valve encased in polyethylene in accordance with Section 15000.

Exposed Valves: The exterior of valves installed above ground or exposed in vaults or enclosures shall be field painted in accordance with Section 09900.

3.4 CONCRETE

Concrete thrust, anchor, and support blocks shall be installed as called for in the Standard Drawings. The concrete shall be placed so that valves and valve operators will be accessible for repairs or replacement.

3.5 GATE WELLS AND EXTENSION STEMS

Gate wells and extension stems for buried valves shall be installed in accordance with Section 15000 and the Standard Drawings.

3.6 DISINFECTION OF THE VALVES

Disinfection and flushing shall be performed in accordance with Section 15041, as part of the process of disinfecting the main pipeline. The valves shall be operated during the disinfection period to completely disinfect all internal parts.

3.7 HYDROSTATIC TESTING

Valves shall be hydrostatically tested in conjunction with the pipeline in which it is connected in accordance with Section 15044.

END OF SECTION

SECTION 15108 AIR RELEASE VALVE, AIR AND VACUUM VALVE, AND COMBINATION AIR VALVE ASSEMBLIES

PART 1 GENERAL

1.1 DESCRIPTION

This section includes the materials and installation instructions for above ground air release valve, air and vacuum valve, and combination air valve assemblies.

The term "air valve" is used generically in this specification to refer to requirements common to all of the specified air release valves, air and vacuum valves, and combination air valves. Otherwise, the various types of air valves are addressed by the individual designations commonly used in AWWA and industry standards.

1.2 REFERENCE STANDARDS

The publications listed below form part of this specification to the extent referenced and are referred to in the text by the basic designation only. Reference shall be made to the latest edition of said standards unless otherwise called for.

American Water Works Association (AWWA)
C512 Standards for Combination Air Valve Assemblies

1.3 RELATED WORK SPECIFIED ELSEWHERE

CMWD Standard Drawings
CMWD Standard Specifications 09900, 15000, 15041, 15044, 15056, 15057, 15061, 15064, 15100, 16640

1.4 SERVICE APPLICATION

A. Combination air valves are generally installed on all potable and recycled water mains at high points and where shown on the Approved Plans and in accordance with the Standard Drawings.

B. Unless otherwise directed by the City Engineer, combination air valves will be required as indicated below:

1. 2" combination air valve assemblies shall be installed on pipeline sizes 6" and 8".

2. 2" combination air valve assemblies shall be installed on pipeline sizes 10" and 12".

3. Multiple 2” and 4" combination air valve assemblies shall be installed on pipeline sizes 16" and 20".

4. 6" combination air valve assemblies shall be installed on pipeline sizes 24" through 36".

C. Air release valves and air and vacuum valves shall be installed in accordance with the Approved Plans or as directed by the City Engineer.

1.5 DELIVERY, STORAGE, AND HANDLING

Valves shall be delivered and stored in accordance with AWWA C550. The port openings shall be covered with plastic, cardboard, or wood while in transit and during storage in the field. These covers shall remain in place until the valve is ready to be installed. Valves shall not be stored in contact with bare ground. Valves shall not be stacked.

1.6 RECYCLED WATER IDENTIFICATION

Air valve assemblies and enclosures used for recycled water shall be identified with purple-colored coating, identification labels or signs in accordance with Section 1500.

1.7 WARNING/IDENTIFICATION TAPE

Warning/Identification tape shall be installed for air valve assemblies in accordance with Section 15000.

PART 2 MATERIALS

2.1 COMBINATION AIR VALVES

A. Combination air valves and appurtenant components and materials suitable for the system pressure shall be selected from the Approved Materials List.

B. Combination air valves shall comply with AWWA C512 except as modified herein.

C. 2" combination air valves shall be the single-body type incorporating stainless steel internal components and National Pipe Threaded (NPT) inlet and outlet configurations.

D. 4" and 6" Combination Air Valves shall be the single-body type. Valves shall incorporate stainless steel internal components, protective hood and flanged inlet.

E. Internal protective epoxy coatings shall be provided in accordance with AWWA C550.

1. Liquid epoxy lining and coating materials shall be listed in the NSF Listing for Drinking Water Additives, Standard 61, certified for use in contact with potable water.

2. The minimum dry film thickness for epoxy linings shall be 0.008". Liquid epoxy lining shall be applied in two (2) coats in accordance with AWWA C210.

2.3 ENCLOSURES

Air Valve Enclosures shall be selected from the Approved Materials List.

2.4 CONCRETE

Concrete used for anchor or thrust blocks and equipment pads shall be in accordance with Section 03000.

2.5 BREAK-AWAY BOLTS

Combination air valves, air release valves and air and vacuum valves located above ground sized 4" and larger shall be installed with break-away bolts in accordance with the Standard Drawings and selected from the Approved Materials List.

2.6 WARNING/IDENTIFICATION TAPE

Warning/Identification Tape shall be in accordance with Section 15000 and selected from the Approved Materials List.

2.7 FIELD PAINTING AND COATING

Field painting and coating materials shall be in accordance with Section 09900 and selected from the Approved Materials List.

PART 3 EXECUTION

3.1 INSTALLATION

A. Air valve assemblies shall be provided as shown on the Approved Plans. Additional air valve assemblies may be required in areas of potential air entrapment, at the discretion of the City Engineer.

B. Air valve assemblies shall be installed relative to street improvements in accordance with the Standard Drawings.

C. Connections for the air valve assemblies shall be made within a section of the main line no closer than 24" to a bell, coupling, joint or fitting.

3.2 CONCRETE

Concrete thrust or anchor blocks and equipment pads shall be installed in accordance with the Standard Drawings.

3.3 WARNING/IDENTIFICATION TAPE

Warning/Identification Tape shall be installed in accordance with Section 15000 and the Standard Drawings.

3.4 DISINFECTION

Air valve assemblies shall be disinfected in accordance with Section 15041 in conjunction with disinfecting the main to which it is connected. The assembly valves shall be operated and the assembly flushed to completely disinfect all internal parts.

3.5 HYDROSTATIC TESTING

Air valve assemblies shall be hydrostatically tested in accordance with Section 15044 in conjunction with the pipeline to which they are connected.

3.6 FIELD PAINTING AND COATINGS

A. Field repairs to the enclosure shall not be permitted. Enclosures requiring repairs to the coating shall be returned to the supplier or coating vendor for repairs or recoating.

END OF SECTION

SECTION 15112 BACKFLOW PREVENTERS

PART 1 GENERAL

1.01 DESCRIPTION

This section includes materials, installation, and testing of reduced-pressure backflow prevention devices and check valve and double check valve assemblies.

1.02 REFERENCE STANDARDS

The publications listed below form part of this specification to the extent referenced and are referred to in the text by the basic designation only. Reference shall be made to the latest edition of said standards unless otherwise called for.

State of California Department of Health Services Division of Drinking Water and Environmental Management, Approved Backflow Prevention Assemblies for Service Isolation.

1.3 RELATED WORK SPECIFIED ELSEWHERE

Agencies of Jurisdiction Rules and regulations regarding "Cross Connection Control and Backflow Prevention"
CMWD Standard Drawings
CMWD Standard Specifications 09900, 15000, 15041, 15044, 15056, 15057, 15061, 15064 and 15100

1.4 SERVICE APPLICATION

A. Reduced-pressure backflow prevention assemblies shall be provided on all commercial, industrial irrigation and multi-family water services.

B. Reduced-pressure backflow prevention assemblies shall be provided on all irrigation services by potable and recycled water.

C. Reduced-pressure backflow prevention assemblies shall be provided on potable water services where recycled water, well water or any other water supply is served to the same property.

D. Reduce pressure backflow preventers assemblies shall be provided at all points of connections to City sources at construction sites.

E. Double check detector assemblies shall be provided on all fire services.

F. The City shall be the final authority as to the location, installation, and type of backflow prevention device required.

1.5 GENERAL DESIGN CONSIDERATIONS

A. The Design and construction of the backflow prevention assembly shall meet the requirements called for in this specification except that any modifications specifically shown on the Approved Plans shall take precedence over these general standards.

B. The nominal size of the backflow prevention device shall be equal to or greater than the size of the purchased meter. For example, a 1" meter shall have a 1" or larger backflow device.

C. The assembly shall include same size valves located on either side of the backflow prevention assemblies. Four test cocks shall be appropriately located on the assembly for testing and certification.

D. The nominal size of double check detector assemblies shall be as shown on the Approved Plans or as directed by the Fire Department.

E. Enclosures and concrete slabs shall be provided only as shown on the Approved Plans.

1.6 DELIVERY, STORAGE AND HANDLING

Backflow prevention assemblies shall be delivered and stored in accordance with AWWA C210, AWWA C213, and AWWA C550. The port openings shall be covered with plastic, cardboard, or wood while in transit and during storage in the field. These covers shall remain in place until the backflow assembly is ready to be installed. Backflow assemblies shall not be stored in contact with bare ground. Backflow assemblies shall not be stacked.

1.7 RECYCLED WATER IDENTIFICATION

Backflow prevention assemblies and enclosures for recycled water shall be identified with purple-colored coating, identification labels, or signs in accordance with Section 15000.

1.8 WARNING/IDENTIFICATION TAPE

Warning/Identification Tape shall be installed for backflow prevention assemblies in accordance with Section 15000.

PART 2 MATERIALS

2.1 BACKFLOW PREVENTION ASSEMBLIES

Backflow prevention assemblies shall be among those listed on the list of "Approved Backflow Prevention Assemblies for Service Isolation" as issued by the State of California Department of Health Services, Division of Drinking Water and Environmental Management.

2.2 CONCRETE

Concrete used for slabs and anchor or thrust blocks shall be in accordance with Section 03000.

2.3 WARNING/IDENTIFICATION TAPE

Warning/Identification Tape shall be in accordance with Section 15000 and the Approved Materials List.

PART 3 EXECUTION

3.1 INSTALLATION

A. Installation shall comply with the latest edition of the Uniform Plumbing Code, applicable local agency and City requirements.

B. Backflow prevention assemblies shall be installed in accordance with the Standard Drawings.

C. Water service and fire service shut-off valves will be secured closed during installation until an approved backflow prevention device is installed and tested in compliance with this specification.

D. When static pressure exceeds 1.03MPa (150psi), or when recommended by the backflow device manufacturer, a pressure-reducing valve shall be installed as shown on the Standard Drawings.

3.2 WARNING/IDENTIFICATION TAPE

Warning/Identification Tape shall be installed in accordance with Section 15000 and the Standard Drawings.

3.3 CONCRETE

Concrete thrust or anchor blocks and slabs shall be installed in accordance with Standard Drawings.

3.4 ENCLOSURES

Enclosures shall be installed where shown on the Approved Plans in accordance with the Standard Drawings.

3.5 DISINFECTION

Disinfection and flushing shall be performed in accordance with Section 15041, as part of the process of disinfecting the main pipeline. The backflow assemblies shall be operated during the disinfection period to completely disinfect all internal parts.

3.6 HYDROSTATIC TESTING

Backflow assemblies shall be hydrostatically tested in conjunction with the pipeline to which they are connected in accordance with Section 15044.

3.7 TESTING

The City will inspect and initially test each backflow prevention assembly after inspection of its proper installation is complete.

Required maintenance of the backflow prevention device and appurtenances and annual testing of the device shall be the private owner's responsibility.

END OF SECTION

SECTION 15121 OPEN TRENCH PIPE CASING

PART 1 GENERAL

1.1 DESCRIPTION

This section includes materials for and installation of open trench pipe casings. Jacked casings or specially-installed pipe casings shall be installed as detailed in Section 15125.

1.2 REFERENCE STANDARD

The publications listed below form part of this specification to the extent referenced and are referred to in the text by the basic designation only. References shall be made to the latest edition of said standards unless otherwise called for.

1.3 RELATED WORK SPECIFIED ELSEWHERE

CMWD Standard Drawings
CMWD Standard Specifications 15000, 15056, 15061, and 15064

1.4 SERVICE APPLICATION

Generally, pipe casings are used for protection of utilities (carrier pipes) and may be installed for future utility installations. Pipe casings shall be used for the installation of potable water, reclaimed water, and sewer mains where shown on the Approved Drawings or as required by the City.

1.5 DESIGN REQUIREMENTS

A. Pipe casings shall be provided for carrier piping where shown on the Approved Drawings or as required by the City. The sizes and material type for pipe casing shall be as detailed in Part 2 of this Section.

B. The City Engineer may select a greater steel thickness and diameter as appropriate for the intended application.

1.6 SUBMITTALS

The following items shall be submitted for review and approval by the City Engineer prior to the start of the casing work:

A. Casing pipe.

B. Casing spacers and end seals.

C. Installation procedure.

D. Method of restraint to be used for the casing and carrier pipes.

E. Welding procedure.

F. Cathodic Protection.

1.7 DELIVERY, STORAGE AND HANDLING

A. PVC pipe casing shall be stored in suppliers' yards and on the job site in accordance to AWWA M23 and the manufacturer's recommendations. PVC pipe casing which has been subjected to excessive ultraviolet radiation from the sun shall not be used. The determination as to the acceptability of PVC pipe casing faded by the sun's radiation shall rest solely with the City.

B. Store PVC pipe casing in the field by the supporting the pipe uniformly per AWWA M23. Do not stack pipe higher than 4' high or stack the pipe with weight on the bell ends. Cover stored PVC pipe casing to protect it from the sun's ultraviolet radiation. Pipe which has been contaminated with any petroleum products (inside or outside) shall not be installed.

C. Proper care shall be used to prevent damage in handling, moving and placing the pipe casing. All pipe casing materials shall be lowered into the trench in a manner that prevents damage. The pipe casing shall not be dropped, dragged or handled in a manner that will cause bruises, cracks, or other damage.

1.8 CASING SPACERS AND END SEALS

Casing spacers and end seals shall be used for all carrier pipe installations within casings.

1.9 WARNING/IDENTIFICATION TAPE

Warning/Identification Tape shall be installed in accordance with Section 15000.

PART 2 MATERIALS

2.1 PIPE CASING

Pipe casing materials shall be as indicated below and shall be selected from the Approved Materials List. The size of the pipe casings required for the various sizes of carrier pipe is as follows:

Carrier Pipe Size	Minimum Casing Size
6"	14"
8"	16"
10"	18"
12"	20"
16"	30"
20"	36"
24"	42"

Pipe Casing for Carrier Pipe larger than 24" shall be as determined by the City Engineer.

A. Polyvinyl Chloride Pipe (PVC) casings shall be as follows:

1. Casing pipe sizes 14" through 36" shall be in accordance with AWWA C905, pressure rated 235 (DR18).

2. The color for PVC casing pipe shall be blue or white for potable water carrier pipe and purple for recycled water carrier pipe.

B. Steel pipe casings shall be as follows:

1. Steel pipe casings, unless otherwise approved by the City, shall be butt-welded sheets (spiral welding of pipe not allowed) conforming to ASTM A 36/A 36M, ASTM A 283/A 283M, Grade D, or ASTM A 568/A 568M, Grade 33. Other steel grades may be used upon approval of the City. Steel casings sized 20" or smaller shall have a minimum wall thickness of 3/8". Steel casings sized larger than 20" shall have a minimum wall thickness of 1/2".

2. Steel pipe casings shall not be lined or coated with any material unless otherwise directed by the City Engineer. If required, steel pipe casing shall be lined and coated with liquid epoxy paint per AWWA C210. Liquid epoxy shall be applied in three coats to a minimum thickness of 0.012". The final cost of the liquid epoxy shall be blue for potable water and purple for recycled water steel casing pipe.

3. Steel pipe casings shall include the installation of an anode in accordance with the Standard Drawings, unless otherwise directed by the City Engineer.

2.2 CASING SPACERS

Casing spacers shall be stainless steel, centered-position type with PVC liner and non-metallic anti-friction runners selected from the Approved Materials List.

2.3 CASING END SEALS

Casing end seals, selected from the Approved Materials List, shall wrap around the casing and carrier pipe to provide a barrier to backfill material and seepage. The casing end seal shall be a minimum 1/4" thick styrene butadiene rubber sheet attached to the carrier pipe and casing with 1" wide stainless steel bands. Zippered casing end seals with stainless steel bands may also be used.

2.4 WARNING/IDENTIFICATION TAPE

Warning/Identification tape materials shall be in accordance with Section 15000 and the Approved Materials List.

PART 3 EXECUTION

3.1 TRENCH EXCAVATION, BACKFILL AND COMPACTION

Trenching, bedding, backfilling and compaction operations shall be performed in accordance with Section 02223.

3.2 DEWATERING

The Contractor shall provide, and maintain at all times during construction, ample means and devices to promptly remove and dispose all water from source entering trench excavations or other parts of the work. Any damage caused by flooding of the trench shall be the Contractor's responsibility.

Dewatering shall be performed by methods that will maintain a dry excavation, preservation of the final lines and grades and protection of all utilities. If flooding of the trench does occur, the Contractor shall immediately dewater and restore the trench. Damaged or altered pipeline appurtenances or trench materials shall be repaired or replaced as directed by the Engineer.

3.3 PIPE CASING INSTALLATION

Installation of pipe casing and carrier pipe shall be as described below and in accordance with the Standard Drawings.

A. Pipe casing shall be installed in an open trench type excavation.

B. Pipe casings shall be lowered onto the bedding of the proper lines and grades called for on the Approved Plans.

C. Pipe casings shall have firm bearing along their full length.

D. Pipe casing sections shall be bell and spigot joint connection for PVC. PVC casing sections shall be restrained by mechanical means or by the use of splined gaskets. Steel casing sections shall be jointed by full-circumference butt welding in the field. Steel casing shall have all areas of damaged coating repaired.

E. Carrier pipe shall be pushed into the casing incorporating the use of casing spacers as described below.

F. PVC or ductile-iron carrier pipe joints shall be restrained either by mechanical means or by use of splined gaskets.

G. Steel carrier pipe sections shall be lap joint welded per Section 15061.

H. Upstream and downstream elevations of the carrier pipe shall be verified prior to installing the end seals.

I. The portion of carrier pipes installed within casings shall have pressure, leakage, and infiltration testing completed in accordance with Sections 15043 and 15044 prior to installation of the end seals.

J. The annular space between the carrier pipe and casing shall not be filled with any material unless otherwise noted on the Approved Plans.

3.4 CASING SPACERS

Casing spacers shall be used to prevent the carrier pipe bell from touching the casing and to maintain a uniform space between the carrier pipe and casing interior. A minimum of three casing spacers shall be installed, equally spaced, on each pipe section at intervals recommended by the manufacturer.

3.5 CASING END SEALS

Casing end seals shall be installed in accordance with the manufacturer's recommendations.

Carrier pipe shall pass hydrostatic or leakage tests in accordance with Sections 15044 or Section 15043 prior to the installation of casing end seals or backfilling operations.

3.6 WARNING/IDENTIFICATION TAPE

Warning/Identification Tape shall be installed above the casing pipe in accordance with Section 15000 and the Standard Drawings.

END OF SECTION

SECTION 15125 JACKED PIPE CASING

PART 1 GENERAL

1.1 DESCRIPTION

This section includes materials and installation of jacked pipe casings. Where the contractor proposes to install pipelines using directional drilling or boring, a complete submittal of the methods and materials shall be made to the City prior to the initiation of the work.

1.2 REFERENCE STANDARDS

The publications listed below form part of this specification to the extent referenced and are referred to in the text by the basic designation only. References shall be made to the latest edition of said standards unless otherwise called for.

1.3 RELATED WORK SPECIFIED ELSEWHERE

CMWD Standard Drawings
CMWD Standard Specifications 15000, 15056, 15061, 15064, and 15065

1.4 SERVICE APPLICATION

Generally, pipe casings are used for protection of utilities (carrier pipes) and may be installed for future utility installations. Pipe casings shall be used in conjunction with the installation of potable water, recycled water, and sewer mains in areas shown on the Approved Plans or as directed by the City Engineer.

1.5 PROTECTION OF EXISTING UTILITIES AND FACILITIES

The contractor shall be responsible for the care and protection of all existing utilities, facilities, and structures that may be encountered in or near the area of the work.

1.6 SAFETY AND PERMITTING REQUIREMENTS

A. Pipe jacking and boring projects 30" in diameter or larger are required to be classified by the State of California. Department of Industrial Relations, Division of Occupational Safety and Health.

B. Protection of workers in trench excavation shall be as required by the State of California Construction Safety Orders, the State of California State Health and Safety Code, the requirements of CAL-OSHA.

C. All excavations shall be performed, protected, and supported as required for safety and in the manner set forth in the operation regulations prescribed by CAL-OSHA.

D. It shall be the Contractor's responsibility to obtain excavation permits, traffic control permits, or other applicable permits from the local agency which has jurisdiction.

E. A pre-job safety conference with representatives of the Division of Occupational Safety, CAL-OSHA, the City, the Contractor and Contractor's employees shall be held before the work begins.

F. Contractors performing this work are required to hold a current C-34 or General Engineering Contracting License from the State of California.

1.7 DESIGN REQUIREMENTS

A. Pipe casing shall be provided for the carrier piping where shown on the Approved Plans or as required by the City Engineer. The sizes and material type for pipe casing shall be as detailed in Part 2 of this Section.

B. The City Engineer may select a greater steel thickness and diameter as appropriate for the intended application.

1.8 SUBMITTALS

The contractor shall provide to the City and the agency, or agencies, of jurisdiction a drilling, boring, and jacking plan prior to commencing boring operations. The submittal shall include:

A. Configuration of the jacking pits and jacking pit bracing or shoring. Pit excavations deeper than 20' require the shoring system to be certified by a Registered Civil Engineer.

B. The pipe casing material to be used. Include pipe material type, wall thickness, and welding details.

C. Casing spacers and end seals.

D. Jacking plan and profile drawing detailing the placement of the jacked casing.

E. Installation procedure.

F. Manufacturer and type of liquid epoxy paint, including proposed steel preparation and application methods to be used.

G. The jacking machinery and jacking head proposed to be used.

H. Summary of the backfilling method to be used.

I. Worker Protection and Safety Plan.

J. Cathodic Protection.

1.9 DELIVERY AND HANDLING

Proper care shall be used to prevent damage in handling, moving and placing the pipe casing. All pipe-casing materials shall be lowered into the trench in a manner that prevents damage. The pipe casing shall not be dropped, dragged or handled in a manner that will cause dents, cracks, or other damage to the pipe casing.

1.10 CASING SPACERS AND END SEALS

Casing spacers and end seals shall be used for all pipe installations with casings.

If the carrier pipe is not installed within the casing, as a continuous operation, following completion of jacking, then bulkhead and portals and backfill the approach trenches. Bulkheads will be removed at a later time to allow for the installation of the carrier pipe.

PART 2 MATERIALS

2.1 PIPE CASINGS

Jacked pipe casings shall be steel.

A. The minimum size and thickness of jacked steel pipe casings shall be as follows, unless otherwise required by the agency having jurisdiction over the road, utilities, or improvements.

Carrier Pipe Size	Minimum Casing Size	Min. Steel Casing Wall Thickness
6"	14"	3/8"
8"	16"	3/8"
10"	18"	3/8"
12"	20"	3/8"
16"	30"	1/2"
20"	36"	1/2"
24"	42"	1/2"

B. Pipe casing for carrier pipe sizes larger than 24" shall be determined by the City Engineer.

C. The Contractor may submit a greater steel thickness and diameter as appropriate for the method of work and loadings involved, as suitable for the site and as limited by possible interferences. The Contractor shall submit any deviations in the approved design to the City fourteen (14) working days in advance of jacking operations, and may not proceed with any work until the City Engineer has approved the alternate methods proposed.

D. It is the Contractor's responsibility to choose a size of casing at or above the minimum specified, and to ensure that the jacking is done with a high degree of accuracy to permit installation of the carrier pipe to the lines and grades shown on the approved plans.

E. Steel pipe casings, unless otherwise approved by the City, shall be butt-welded sheets (spiral welding of pipe now allowed) conforming to ASTM A 36/A 36M, ASTM A 283/A 283M, Grade D, or ASTM A 570/A 570M, Grade 33. Other steel grades may be used upon approval of the City Engineer.

F. Steel pipe casings shall include the installation of an anode in accordance with the Standard Drawings, unless otherwise directed by the City Engineer.

2.2 CASING SPACERS

Casing spacers shall be stainless steel, centered-position type with PVC liner and non-metallic anti-friction runners in accordance with the Approved Materials List.

2.3 CASING END SEALS

Casing end seals, in accordance with the Approved Materials List, shall wrap around the casing and carrier pipe to provide a barrier to backfill material and seepage. The casing end seal shall be a minimum 1/4" thick styrene butadiene rubber sheet attached to the carrier pipe and casing with 1" wide stainless steel bands. Zippered casing end seals with stainless steel bands may also be used.

2.4 WARNING/IDENTIFICATION TAPE

Warning/Identification Tape materials shall be in accordance with Section 15000 and the Approved Materials List.

PART 3 EXECUTION

3.1 TRENCH EXCAVATION, BACKFILL AND COMPACTION

Trenching, bedding, backfilling and compaction operations shall be performed in accordance with Section 02223.

3.2 JACKING PIT

A. The approach trench for jacking or boring operations shall be adequately shored to safeguard existing substructures and surface improvements and to ensure against ground movement in the vicinity of the casing portal.

B. Placement of equipment in the approach trench of the jacking pit shall be firmly bedded on the required line and grade using heavy timbers, structural steel, or concrete cradles of sufficient length to provide accurate control of jacking alignment. Provide space to insert the casing lengths to be jacked. Anchor the timbers and structural steel sections to ensure action of the jacks in line with the axis of the casing. Place a timber or structural steel bearing block between the jacks and the end of the casing to provide uniform bearing upon the casing end evenly distribute the jacking pressure.

C. After jacking equipment and debris from the tunnel have been removed from the approach trench of jacking pit, prepare the bottom of the jacking pit as a pipe foundation. Remove all loose and disturbed materials below pipe grade to undisturbed earth and re-compact the material in accordance with Section 02223.

3.3 PIPE CASING INSTALLATION

Installation of pipe casings shall be as described below and in accordance with the Standard Drawings. Only workers experienced in jacking operations shall be used in performing the work of jacking and boring.

A. The Contractor's attention is called to the fact that extreme care is required in placing the casing so as to permit the installation of the carrier pipe to the lines and grades shown on the Approved Plans.

B. Gravity flow pipelines are designed at grades that do not permit variance from the lines and grade as shown on the Approved Plans.

C. Fit a sectional shield or steel jacking head to the leading section of the casing. The shield or head shall extend around the outer surface of the upper two-thirds of the casing and project at least 18" beyond the driving end of the casing. It shall not protrude more than 1/2" beyond the outer casing surface.

D. The leading section of casing shall be equipped with a jacking head securely anchored thereto to prevent any wobble or variation in alignment during the jacking operation.

E. To avoid loss of ground outside the casing, carry out excavation entirely within the jacking head and not in advance of the head. In general, excavated materials shall be removed from the casing as jacking progresses and no accumulation of excavated material within the casing will be permitted.

F. A jacking band to reinforce the end of the pipe receiving the jacking thrust will be required.

G. Control the application of jacking pressure and excavation of material ahead of the advancing casing to prevent it from becoming friction-bound or deviating from required line and grade. Do not encroach upon the minimum annular space detailed. Restrict the excavation of material to the least clearance to prevent binding in order to avoid settlement or possible damage to overlying structures or utilities.

H. Steel casing sections shall be full-circumference butt-welded in the field. It shall be the Contractor's responsibility to provide stress transfer across the joints capable of resisting the jacking forces involved.

3.4 CARRIER PIPE INSTALLATION

A. Carrier pipe shall be pushed into the casing incorporating the use of casing spacers as described below.

B. PVC or ductile-iron carrier pipe joints shall be restrained either by mechanical means or by use of splined gaskets.

C. Steel carrier pipe sections shall be lap joint welded in accordance with Section 15061.

D. Upstream and downstream elevations of the carrier pipe shall be verified prior to installing the end seals.

E. The portion of carrier pipe installed within a casing shall have pressure, leakage, and infiltration testing completed in accordance with Section 15043 and 15044 prior to installation of the end seals.

F. The annular space between the carrier pipe and casing shall not be filled with any material unless otherwise noted on the Approved Plans.

3.5 CASING SPACERS

Casing spacers shall be used to prevent the carrier pipe bell from touching the casing and to maintain a uniform space between the carrier pipe and casing interior. Casing spacers shall be installed on the carrier pipe at intervals per the manufacturer's recommendations with a minimum of three spacers per pipe section equally spaced.

3.6 CASING END SEALS

Casing end seals shall be installed in accordance with the manufacturer's recommendations.

Carrier pipe shall pass hydrostatic or leakage tests in accordance with Sections 15044 or 15043 prior to the installation of casing end seals or backfilling operations.

END OF SECTION

SECTION 15139 FIRE HYDRANTS

PART 1 GENERAL

1.1 DESCRIPTION

This section includes the materials for and installation of fire hydrant assemblies.

1.2 REFERENCE STANDARDS

The publications listed below form part of this specification to the extent referenced and are referred to in the text by the basic designation only. Reference shall be made to the latest edition of said standards unless otherwise called for.

1.3 RELATED WORK SPECIFIED ELSEWHERE

CMWD Standard Drawings
CMWD Standard Specifications 09900, 15000, 15041, 15044, 15056, 15061, 15064, and 15100

1.4 SYSTEM DESCRIPTION

A. Hydrant outlet sizes and configuration shall be as shown on the Approved Plans or as directed by the fire department of jurisdiction.

B. Hydrants shall generally have the following number and size of outlets as directed by the fire department of jurisdiction:

1. Residential: One 2-1/2" outlet and one 4" outlet

2. Commercial: Two 2-1/2" outlets and one 4" outlet

3. Industrial: One 2-1/2" outlet and two 4" outlets

1.5 SERVICE APPLICATION

A. Fire hydrants shall be installed on potable water mains as shown on the approved drawings.

B. Wet-barrel hydrants shall generally be used for pressures up to 1.38 MPa (200 psi). System pressures up to and including 1.03 MPa (150 psi) require standard wet-barrel hydrants, and pressures up to 1.38 MPa (200 psi) require high-pressure wet-barrel hydrants in accordance with the Approved Materials List.

1.6 DELIVERY, STORAGE AND HANDLING

Fire hydrants shall be delivered and stored in accordance with AWWA C210, AWWA C213, and AWWA C550. The port openings shall be covered with plastic, cardboard or wood while in transit and during storage in the field. These covers shall remain in place until the valve is ready to be installed. Fire hydrants shall not be stored in contact with bare ground. Fire hydrants shall not be stacked.

1.7 WARNING/IDENTIFICATION TAPE

Warning/Identification Tape shall be installed for fire hydrant assemblies in accordance with Section 15000.

PART 2 MATERIALS

2.1 HYDRANTS

A. Fire hydrants and appurtenances shall be selected from the Approved Materials List.

B. Wet-barrel fire hydrants shall comply with AWWA C503 and these specifications unless otherwise indicated on the Approved Drawings.

C. All outlets shall be provided with National Standard Fire-Hose Threads. Outlets shall be equipped with plastic caps.

D. Wet-barrel fire hydrant flanges and appurtenant bury ells and spools shall incorporate a six-hole bolt pattern.

2.2 BOLTS AND NUTS

A. Hydrant flange bolts and nuts shall be selected from the Approved Materials List.

B. Bolts and nuts shall be zinc-plated A307 carbon steel in accordance with Section 15000.

2.3 CONCRETE

Concrete used for splash pads, thrust or anchor blocks shall be in accordance with the Standard Drawings.

2.4 WARNING/IDENTIFICATION TAPE

Warning/Identification Tape materials shall be in accordance with Section 15000 and the Approved Materials List.

2.5 FIELD PAINTING AND COATING

Field painting and coating materials shall be in accordance with Section 09900 in accordance with the Approved Materials List.

PART 3 EXECUTION

3.1 GENERAL

A. Fire hydrant assemblies shall be installed at locations shown on the Approved Plans or as directed by the fire department of jurisdiction in accordance with the Standard Drawings.

B. The location and port orientation of the Fire Hydrant shall be in accordance with the Standard Drawings.

C. Fire hydrant flange bolts shall be set with nuts on top. Torque nuts uniformly and progressively in accordance with the manufacturer's recommendations.

D. Depending on location, fire hydrant assemblies may require protection posts or concrete retaining walls. When required by the City Engineer, or when shown on the Approved Plans, protection posts or retaining walls shall be installed in accordance with the Standard Drawings.

3.2 CONCRETE

Concrete thrust and anchor blocks shall be installed in accordance with the Standard Drawings.

3.3 WARNING/IDENTIFICATION TAPE

Warning/Identification Tape shall be installed in accordance with Section 15000 and the Standard Drawings.

3.4 DISINFECTION OF FIRE HYDRANT

The fire hydrant assembly shall be disinfected in accordance with Section 15041, as part of the process of disinfecting the main pipeline. The assembly valves shall be operated and the assembly flushed to completely disinfect all internal parts.

3.5 HYDROSTATIC TESTING

Fire hydrant assemblies shall be hydrostatically tested in accordance with Section 15044 in conjunction with the pipeline to which it is connected.

3.6 FIELD PAINTING AND COATING

The fire hydrant exterior shall be field painted in accordance with Section 09900.

END OF SECTION

SECTION 16640 CATHODIC PROTECTION BY SACRIFICIAL ANODES

PART 1 GENERAL

1.1 SCOPE

This section includes materials, testing, and installation of corrosion protection and monitoring systems for metallic pipes including insulating flange kits, test stations, copper/copper sulfate reference electrodes, sacrificial anodes, wiring, and exothermic welds..

1.2 DEFINITIONS

A. CONTRACTOR. The qualified construction firm selected by the Owner to have prime responsibility for the completion of work.

B. OWNER. The Owner, as referred to in these specifications, is the City of Carlsbad.

C. ENGINEER. The Engineer is the Owner's representative who is assigned to be the direct contact between the Owner and the Contractor.

D. CORROSION ENGINEER. Retained by the Contractor, who is trained and experienced in cathodic protection installations and design and who is either a Registered Corrosion Engineer or a NACE Certified Cathodic Protection Specialist.

1.3 SPECIFICATIONS AND STANDARDS

A. American Society for Testing and Materials (ASTM):

C94-86	Ready-Mixed Concrete
D-2220	Polyvinyl chloride Insulation for Wire and Cable
D-1248	Polyethylene Plastics Molding and Extrusion Materials
B3	Soft or Annealed Copper Wire
B8	Concentric-Lay Stranded Copper Conductors

B. Federal Specifications (FS)
Military Specification (Mil. Spec):

MIL-C-18480B	Coating Compound, Bituminous, Solvent, Coal Tar Base

C. Underwriter's Laboratories, Inc. (UL) Publications:

83-80	Thermoplastic-Insulated Wires
486-76	Wire Connectors and Soldering Lugs for Use with Copper Conductors

D. National Association of Corrosion Engineers (NACE):

RP0169-96	Recommended Practice, Control of External Corrosion on Underground or Submerged Metallic Piping Systems

E. National Association of Corrosion Engineers (NACE):

RP0286	Electrical Isolation of Cathodically Protected Pipelines

1.4 SUBMITTALS

The following information shall be submitted for approval of the ENGINEER in accordance with Section 1300 of these specifications.

A. Catalog Cuts:

1. High potential magnesium anodes
2. At-grade concrete test box with cast iron lid
3. Shunts
4. Wire and cable
5. Exothermic weld kits
6. Weld caps
7. Weld coating
8. Plastic warning tape
9. Insulating flange kits
10. Wax tape coating system

B. As-Built Drawings.

The CONTRACTOR shall maintain As-Built drawings showing exact locations of anodes, test stations, insulators, and wire trenching runs. Location changes from the design shall be clearly marked in red on a blue line copy of the design drawings. The As-Built drawings shall be submitted to the ENGINEER at the end of the project. The project is not considered complete until As-Built drawings are submitted.

C. Test Results.

1. Insulator tests
2. Continuity tests
3. Anode testing and cathodic protection performance

PART 2 MATERIALS

2.1 GENERAL

Materials and equipment shall be new and the standard product of manufacturers regularly engaged in the manufacturing of such products. All materials and equipment shall bear evidence of safe operation approval from a nationally recognized testing laboratory.

2.2 HIGH POTENTIAL MAGNESIUM ANODES

A. Capacity. High potential magnesium anodes shall have a theoretical energy content of 1000 ampere-hours per pound and have a minimum useful output of 500 ampere-hours per pound.

B. Chemical Composition (High Potential Magnesium).

Aluminum	0.01 percent (max)
Manganese	0.5 to 1.3 percent
Zinc	0.002 percent (max)
Copper	0.02 percent (max)
Nickel	0.001 percent (max)
Iron	0.03 percent (max)
Silicon	0.002 percent (max)
Other	0.05 percent each (max)
Magnesium	balance

C. Open Circuit Potential. The open circuit potential of all anodes, buried in the soil, shall be between 1.55 and 1.75 volts dc versus a copper-copper sulfate reference electrode.

D. Ingot Size And Weight. Anodes shall be 48-pound pre-packaged, high potential ingots with a trapezoidal cross section. Ingot length shall be 32 inches long. The total packaged weight shall be 105 lbs.

E. Anode Construction. Anodes shall be cast magnesium with a galvanized steel core rod recessed on one end to provide access to the rod for connection of the lead wire. Silver braze the lead wire to the rod and make the connection mechanically secure. Insulate the connection to a 600-volt rating by filling the recess with epoxy and covering any exposed bare steel core or wire with heat shrinkable tubing. The insulating tubing shall extend over the lead wire insulation by not less than 1/2 inch.

F. Anode Pre-Packaged Backfill Material. The anodes shall be completely encased and centered within a permeable cloth bag in a special low resistivity backfill mix with the following composition:

Gypsum	75%
Powdered bentonite	20%
Anhydrous sodium sulfate	5%

G. Backfill grains shall be such that 100 percent is capable of passing through a screen of 100 mesh. Backfill shall be firmly packed around the anode such that the ingot is approximately in the center of the backfill. The resistivity of the backfill shall be no greater than 50 ohm-cm when tested wet in a soil box. Total prepackaged weight shall be approximately 105 pounds.

2.3 AT-GRADE TEST STATIONS

A. Test Box. At-grade test boxes shall be round, pre-cast concrete with a cast iron lid. The dimensions shall be 14-1/4 inches O.D. by 9 inches I.D. by 12 inches high, similar to Christy G5 Utility Box with a cast iron supporting ring and lid. The lid shall be cast with the legend "Test Station".

B. Identification Tags. All test leads shall be identified with an Avery label (model 5361), self-adhesive covered with polyolefin clear heat shrink tubing (3mfp301). The label shall include: name of facility – size – pipe material; type of insulation; station number.

C. Concrete Pad. Test boxes mounted in unpaved areas shall be mounted in a reinforced 24-inch square by 4-inch thick concrete pad constructed of ASTM C94 ready-mix concrete. Rebar shall be No. 4 steel.

2.4 WIRE AND CABLE

All wires shall be stranded copper with HMWPE or THWN insulation suitable for direct burial in corrosive soil and water, conforming to UL 83 and ASTM standards B3 or B8. HMWPE insulation shall conform to ASTM D1248 type 1, class c, grade 5. THWN insulation shall conform to ASTM D-2220.

A. Test Leads. No. 8 AWG HMWPE.

B. Anode Lead Wire. Anode lead wires shall be No. 12 AWG THWN.

C. Mechanical Joint Bond Wire. No. 2 AWG HMWPE.

D. All wire and copper connectors shall conform to UL 486-76.

E. Wire Splicing. NO wire splicing is permitted.

2.5 EXOTHERMIC WELD KIT

Wire-to-metal connections shall be made by the exothermic "cadweld" welding process. Weld alloy shall be for steel pipe. It is the CONTRACTOR's responsibility to determine the manufacturer's recommended weld charge size for metallic surfaces.

A. Weld Caps. Royston Roybond Primer 747 and Royston Handy Cap 2 or equal.

B. Weld Coating. Cold-applied fast-drying mastic consisting of bituminous resin and solvents per Mil. Spec. Mil-C-18480B such as Koppers bitumastic 50 or 505, Tnemec 40-h-413, tape-coat TC mastic or 3M Scotch Clad 244. The minimum coating thickness shall be 25 mils (0.025 inch).

2.6 INSULATING FLANGE KITS

A. Gaskets: ANSI B-16.21, Type E, NEMA G10 glass with a rectangular o-ring seal for operation between 20-deg. F and 150-deg. F. Gaskets shall be suitable for the temperature and pressure rating of the piping system in which they are installed.

B. Insulating Sleeves: 1/32-inch thick tube, full length, G10 glass material per NEMA LI-1 for operation between 20-deg. F and 150-deg. F. For installation at threaded valve flanges, half-length sleeves shall be used.

C. Insulating Washers: 1/8-inch thick, full length, G10 glass per NEMA LI-1 for operation between 20-deg. F and 150-deg. F.

D. Steel Washers: 1/8-inch cadmium plated steel placed between the nut and insulating washer.

E. Coating: All buried insulating flanges shall be wax taped coated per AWWA C217. See section for "External Coating for Buried Surfaces" below.

2.7 EXTERNAL COATING FOR BURIED SURFACES

A. All buried insulating flange kits, AND buried pipe sections and fitting surfaces that are not epoxy or polyurethane coated shall be wrapped with a three-layer petrolatum wax tape coating system per AWWA C217.

B. Primer: All surfaces shall be prime coated with a blend of petrolatum, plasticizer, inert fillers, and corrosion inhibitors having a paste-like consistency.

C. Wax Tape: Covering material shall be a synthetic felt tape, saturated with a blend of petrolatum, plasticizers, and corrosion inhibitors that is formable over irregular surfaces.

D. Plastic Outer Wrap: The primed and wax taped surface shall be covered with a plastic outer wrap consisting of three layers of 50-guage (10-mil) polyvinylidene chloride or PVC, high cling membrane wound together.

2.8 PLASTIC WARNING TAPE

A. Plastic warning tape for all cable trenches shall be a minimum of 4 mils thick and 6 inches wide, inert plastic film designed for prolonged use underground, and printed with "Caution: Cathodic Protection Cable Below".

PART 3 CATHODIC PROTECTION INSTALLATION

3.1 GENERAL

A. Standard. Cathodic protection installation shall conform to NACE RP0169-96 “Recommended Practice, Control of External Corrosion on Underground or Submerged Metallic Piping Systems.

B. CONTRACTOR Qualifications. All work shall be performed by qualified, experienced personnel working under continuous, competent supervision. Qualified CONTRACTORs must demonstrate at least five years of experience with cathodic protection installations.

C. Test Results. The CONTRACTOR shall submit a CORROSION ENGINEER’s report including all test data, conclusions, repairs, and cathodic protection system performance.

D. Notification For Testing. The CONTRACTOR shall notify the ENGINEER at least five days in advance of the anodes and test station installations. The ENGINEER or the OWNER's representative shall, at their discretion, witness the installation of anodes and cathodic protection facilities. Testing shall be as described in this specification section.

3.2 MAGNESIUM ANODES

A. Inspection. All lead wires shall be inspected to ensure that the lead wire is securely connected to the anode core and that no damage has occurred to the lead wire. Lead wire failures shall require replacement of the complete anode and lead wire.

B. Pre-Packaged Anode Inspection. Each anode shall be inspected to ensure that the backfill material completely surrounds the anode and that the cloth bag containing the anode and backfill material is intact. If the prepackaged anodes are supplied in a waterproof container or covering, that container or covering shall be removed before installation. The CONTRACTOR shall notify the ENGINEER at least five (5) days in advance of installing the anodes.

C. Location. Anodes are to be installed in augured holes as shown in the drawings. Anode positions can be adjusted slightly to avoid interference with existing structures. Alternate anode positions must be approved by the ENGINEER.

D. Handling. Care shall be taken to ensure that the anode is never lifted, supported, transported, or handled by the lead wire. All anodes shall be lowered into the hole using a sling or a rope.

E. Anode Hole Size and Depth. Anodes shall be placed vertically at the bottom of a 12 feet deep augured hole, 12 inches in diameter (minimum).

F. Soaking Requirements, Pre-Packaged Anodes. Once the prepackaged anodes are in the hole, 15 gallons of water shall be poured into the hole so that the anodes are completely covered with water. Allow the anodes to soak for a minimum of 30 minutes before any soil backfill is added.

G. Soil Backfill. After the pre-packaged anodes are soaked, the hole is backfilled with stone-free, native soil. No voids shall exist around the anode bags and the anode lead wire shall not be damaged. The backfill shall be tamped and compacted in 18-inch lifts taking care not to damage the anode lead wire.

3.3 AT-GRADE TEST STATIONS

A. Location. At-grade corrosion monitoring test boxes shall be located at the edge and directly behind the curb. All test box locations shall be approved by the ENGINEER.

B. Test Box Bottom. Test boxes shall be set in native soil.

C. Test Lead Attachment. Test leads shall be attached to the pipe using the exothermic weld process. An 18-inch length of slack wire shall be coiled at each weld at the pipe and inside each test box.

D. Concrete Pad. A 24-inch square by 4-inch thick reinforced concrete pad is required around each at-grade test station. Test boxes and concrete pad shall be flush with the top of the curb.

3.4 WIRE AND CABLE

A. Test Lead Trench. Horizontal test or anode lead runs shall be placed in a 36-inch trench.

B. Wire Handling. Wire leads shall not be stretched or kinked. Care shall be taken when installing wire and backfilling. If wire insulation is damaged during installation, it shall be rejected and replaced completely at the CONTRACTOR's expense. All rejected wire shall be removed from the job site at the close of each workday.

C. Plastic Warning Tape. Plastic warning tape shall be installed in all wire trenches and 12 inches below finished grade.

D. Splicing. Wire splices are not permitted.

3.5 WIRE-TO-PIPE CONNECTIONS

A. All connections of copper wires to the pipe shall be made by the exothermic weld method.

B. Weld Charge Size. It is the CONTRACTOR's responsibility to ensure that the manufacturer's recommended weld charge size is used.

C. Preparation Of Wire. Do not deform cable. Remove only enough insulation from the cable to allow for the exothermic weld.

D. Preparation Of Metal. Remove all coating, dirt, grime and grease from the metal structure by wire brushing. Clean the structure to a bright, shiny surface free of all serious pits and flaws by using a file. The surface area of the structure must be absolutely dry.

E. Wire Position. The wire is to be held at a 30-degree angle to the surface when welding. Only one wire shall be attached with each weld.

F. Testing of All Completed Welds. After the weld has cooled, the weld shall be tested by striking the weld with a 2-lb hammer while pulling firmly on the wire. All unsound welds shall be cleaned, re-welded, and re-tested. All weld slag shall be removed.

G. Coating Of Welds. The area to be coated shall be clean and completely dry. Apply a primer specifically intended for use with an elastomeric weld cap. Apply the weld cap and a bituminous mastic coating material to all exposed areas around the cap in accordance with the manufacturer's recommendations. The coating shall overlap the structure coating by a minimum of 3 inches.

H. Mortar Repair. Coating voids shall be filled with cement grout.

3.6 BOND WIRES

A. Mechanical Joint Bond Wires. Two (2) No. 2 HMWPE bond wires are required across each non-insulating, in-line valve; a third No. 6 HMWPE bond wire is required from the valve to one outside flange as shown in the drawings. The bond wires shall be attached using the exothermic weld process. Bond wires shall have some slack wire at each weld to allow for creep when backfilling.

3.7 INSULATING FLANGE KITS

A. General: Insulating flange kits shall be pre-assembled and installed as recommended by the manufacturer, and per NACE RPO 286. Moisture, soil, and other foreign matter must be fully removed and prevented from contacting any portion of mating surfaces. If foreign matter contacts any portion of these surfaces, then the entire flange shall be disassembled, cleaned, and dried before reassembly.

B. Installation: Align and install insulating joints according to the manufacturer's recommendations to avoid damaging insulating materials. The manufacturer's bolt tightening sequence and torque specifications shall be followed.

C. Paint Pigments: No electrically conductive pigments or paints shall be used either internally or externally on the bolts, washers, or flanges.

D. Inspection: All buried insulating flanges shall be inspected, tested, and approved by the ENGINEER as described in Part 4 of this specification and prior to the application of wax tape coating.

3.8 EXTERNAL COATING

A. All buried insulating flanges shall be covered with a 3-layer wax tape coating system per AWWA C217. Additionally, all in-line valves, flanges, couplings, and adapters that are not coated with a bonded dielectric coating shall be wax tape coated per AWWA C217.

B. Primer: Surfaces must be cleaned of all dirt, grime, and dust by using a wire brush and clean cloth. The surface shall be dry. Apply the primer by hand or brush. A thin coating of primer shall be applied to all surfaces and worked into all crevices. The primer shall be applied generously around bolts, nuts, and threads, and shall fully cover all exposed areas. The primer should overlap the pipe coating by a minimum of 3-inches.

C. Petrolatum Saturated Tape: The wax tape can be applied immediately after the primer. Short lengths of tape shall be cut and carefully molded around each individual bolt, nut, and stud end. For long bolts (such as in couplings), short lengths of tape shall be cut and circumferentially wrapped around each individual bolt. After the bolts are covered, the tape shall be circumferentially wrapped around the flange with sufficient tension to provide continuous adhesion without stretching the tape. The tape shall be formed, by hand, into all voids and spaces. There shall be no voids or gaps under the tape. The tape shall be applied with a 1-inch minimum overlap.

D. Outer Covering: A plastic outer cover shall be applied over the petrolatum-saturated tape. The plastic shall be a minimum of 50-guage (10-mils) and shall have two layers applied.

PART 4 TESTING AND INSPECTION

The CONTRACTOR's CORROSION ENGINEER shall submit his proposed test procedures to the ENGINEER at least five (5) days in advance of the time that the cathodic protection system testing is scheduled. The ENGINEER shall witness all testing at his discretion. All test data shall be submitted to the ENGINEER within seven (7) days of the completion of the testing. All testing shall be done under the supervision of a qualified CORROSION ENGINEER who is retained by the CONTRACTOR. All deficiencies found to be due to faulty materials or workmanship shall be repaired or replaced by the CONTRACTOR and at his expense. The City of Carlsbad shall be notified at least three (3) days in advance to witness the performance testing.

4.1 TEST LEADS

It is the CONTRACTOR's responsibility to test all test leads

A. Test Method. All completed wire connection welds shall be tested by striking the weld with a 2-lb hammer while pulling firmly on the wire. Welds failing this test shall have the surface re-prepared, have the wire re-welded to the pipe and re-tested. Wire welds shall be spot tested by the Engineer. After backfilling the pipe, all test lead pairs shall be tested using a standard ohmmeter.

B. Acceptance. The resistance between each pair of test leads shall not exceed 150% of the total wire resistance as determined from published wire data.

4.2 Anode Lead Wire. The CONTRACTOR is responsible for inspecting anode lead wires. Lead wires shall be spot inspected by the ENGINEER.

A. Test Method. A visual inspection and by running his hand along the full length of the lead while installing.

B. Acceptance. All leads shall be free of cuts nicks or abrasions in the wire insulation. Damaged leads shall be rejected.

4.3 TEST LEAD TRENCHING

The ENGINEER, at his or her discretion, shall inspect wire trenches and backfill material and methods.

A. Test Method. The depth, trench bottom, padding, and backfill material shall be visually inspected prior to backfilling.

B. Acceptance. Conformance with specifications.

4.4 PIPELINE CONTINUITY THROUGH IN-LINE VALVES

The CONTRACTOR's CORROSION ENGINEER shall measure the linear resistance of sections of pipe in which in-line valves or other mechanical joints have been installed. All testing shall be done by the CORROSION ENGINEER in the presence of the ENGINEER.

A. Test Method. Resistance shall be measured by the linear resistance method. A direct current shall be impressed from one end of the test section to the other (typically test station to test station). A voltage drop is measured for several different current levels. The measured resistance (R) is calculated using the equation R=dV/I, where dV is the voltage drop between the test span and I is the current. The resistance shall be measured for at least four (4) different current levels.

B. Acceptance. Acceptance is a comparison between the measured resistance (from the field test data) and the theoretical resistance. The theoretical resistance must consider the pipe (length and wall thickness) and the resistance of the bond wires. The measured resistance shall not exceed the theoretical resistance by more than 130%. The CONTRACTOR's CORROSION ENGINEER shall submit, within seven (7) days of the completion of the testing and in a report format, to the ENGINEER all calculations of the theoretical resistance and measured pipe resistance for each section tested.

4.5 INSULATING FLANGE KITS

A. Responsibility: Insulating flanges shall be inspected and tested by the CONTRACTOR'S CORROSION ENGINEER and in the presence of the ENGINEER, prior to backfilling. Testing of the buried insulating flange kit prior to backfill will result in non-acceptance of the insulator.

B. Test Method: The assembled flange shall be tested using a Gas Electronics Model 601 Insulation Checker specifically design for testing insulating flanges. The testing shall be done by a qualified CORROSION ENGINEER accepted by the ENGINEER

and shall be done in accordance with NACE RPO 286.

C. Acceptance: The installation of the insulating flange kit shall be considered complete when the testing device indicates no shorts or partial shorts are present. The CONTRACTOR shall provide assistance in finding any and all shorts or shorted bolts. All disassembly and reassembly necessary for acceptance shall be done at the CONTRACTOR'S expense.

4.6 CATHODIC PROTECTION PERFORMANCE

The cathodic protection system shall be activated and tested by the CONTRACTOR's CORROSION ENGINEER in the presence of the ENGINEER.

A. Test Method. The installed cathodic protection system testing shall include: native pipe-to-soil potentials, protected pipe-to-soil potentials, open-circuit anode potentials, and anode current output measurements.

B. Acceptance. Shall be based on achieving the –850 mV criterion as outlined in NACE RPO169-96. All data shall be submitted, in a typed 8-1/2 X 11 inch report to the City's ENGINEER and the City's CORROSION ENGINEER for approval.

C. Compliance With Specifications. Deficiencies or omissions in materials or workmanship found by these tests shall be rectified at the CONTRACTOR's expense. Deficiencies shall include but are not limited to: broken leads, improper or unclean trenches, lack of 18-inchor slack wire in test boxes; improperly mounted test boxes; improper installation and testing of insulators; and other deficiencies associated with the workmanship, installation, and non-functioning equipment.

END OF SECTION