APPENDIX A

- **Level of Service Criteria (4 Pages)**
- **Existing Intersection LOS Worksheets**
- **Existing Plus Project Intersection LOS Worksheets**

APPENDIX A (Cont.)

- **Level of Service Criteria (4 Pages)**
- **Existing Intersection LOS Worksheets**
- **Existing Plus Project Intersection LOS Worksheets**

APPENDIX A

- **Level of Service Criteria (4 Pages)**
- **Existing Intersection LOS Worksheets**
- **Existing Plus Project Intersection LOS Worksheets**

1/4

Traffic Impact Significance Thresholds		
Facility	Measurement of Effectiveness (MOE)	Significance Threshold[1]
Roadway Segment	v/c Ratio	> 0.02
Intersection	Seconds of delay	> 2.0

Notes:
Source: Guidelines for Traffic Impact Studies in the San Diego Region (SANTEC/ITE, Final Draft, March 2, 2000)
1 = Significance threshold applies only when the type of facility operates at LOS E or F.

Level of Service Criteria for ICU Analysis	
Level of Service	Volume to Capacity Ratio (v/c Ratio)
A	≤ 0.60
B	0.60 – 0.70
C	0.70 – 0.80
D	0.80 – 0.90
E	0.90 – 1.00
F	> 1.00

Level of Service Criteria for Unsignalized Intersections	
Level of Service	Average Control Delay (sec/veh)
A	≤ 10
B	10 – 15
C	15 – 25
D	25 – 35
E	35 – 50
F	> 50

Source: 2000 *Highway Capacity Manual*, Chapter 17, Page 2, Exhibit 17-2.

Level of Service Criteria for Signalized Intersections	
Level of Service	Control Delay per Vehicle (sec/veh)
A	≤ 10
B	10 - 20
C	20 - 35
D	35 - 55
E	55 - 80
F	> 80

Source: 2000 *Highway Capacity Manual*, Chapter 16, Page 2, Exhibit 16-2.

2/4

USE FOR CMP /ADT SEGMENTS

Table D-2
Roadway Classifications, Levels of Service (LOS) and Average Daily Traffic (ADT)

STREET CLASSIFICATION	LANES	CROSS SECTIONS* (APPROX.)	LEVEL OF SERVICE W/ADT**				
			A	B	C	D	E
Expressway	6 lanes	102-160/122-200	30,000	42,000	60,000	70,000	80,000
Prime Arterial	6 lanes	102-108/122-128	25,000	35,000	50,000	55,000	60,000
Major Arterial	6 lanes	102/122	20,000	28,000	40,000	45,000	50,000
Major Arterial	4 lanes	78-82/98-102	15,000	21,000	30,000	35,000	40,000
Secondary Arterial/ Collector	4 lanes	64-72/84-92	10,000	14,000	20,000	25,000	30,000
Collector (no center lane) (continuous left-turn lane)	4 lanes 2 lanes	64/84 50/70	5,000	7,000	10,000	13,000	15,000
Collector (no fronting property)	2 lanes	40/60	4,000	5,500	7,500	9,000	10,000
Collector (commercial-industrial fronting)	2 lanes	50/70	2,500	3,500	5,000	6,500	8,000
Collector (multi-family)	2 lanes	40/60	2,500	3,500	5,000	6,500	8,000
Sub-Collector (single-family)	2 lanes	36/56	---	---	2,200	---	---

LEGEND:

* Curb to curb width (feet)/right of way width (feet): based upon the City of San Diego Street Design Manual and other jurisdictions within the San Diego region.

** Approximate recommended ADT based upon the City of San Diego Street Design Manual.

Notes:

1. The volumes and the average daily level of service listed above are only intended as a general planning guideline.
2. Levels of service are not applied to residential streets since their primary purpose is to serve abutting lots, not carry through traffic. Levels of service normally apply to roads carrying through traffic between major trip generators and attractors.

3/A

Transition between LOS "C" and LOS "D" Criteria

(Reference Highway Capacity Manual)

BASIC FREEWAY SEGMENTS @ 65 mi/hr

LOS	Maximum Density (pc/mi/ln)	Minimum Speed (mph)	Maximum v/c	Maximum Service Flow Rate (pc/hr/ln)
A	11	65.0	0.30	710
B	18	65.0	0.50	1170
C	26	64.6	0.71	1680
D	35	59.7	0.89	2090
E	45	52.2	1.00	2350

USE FOR I-5 MAINLINE PEAK HOUR V/C RATIO

SIGNALIZED INTERSECTIONS and RAMP TERMINALS

LOS	Control Delay per Vehicle (sec/veh)
A	≤ 10
B	> 10 - 20
C	> 20 - 35
D	> 35 - 55
E	> 55 - 80
F	> 80

MULTI-LANE HIGHWAYS @ 55 mi/hr

LOS	Maximum Density (pc/mi/ln)	Minimum Speed (mph)	Maximum v/c	Maximum Service Flow Rate (pc/hr/ln)
A	11	55.0	0.29	600
B	18	55.0	0.47	990
C	26	54.9	0.68	1430
D	35	52.9	0.88	1850
E	41	51.2	1.00	2100

Caltrans

Dotted line represents the transition between LOS "C" and LOS "D"

A/A

E D

L S LOS D

(Generally used by Caltrans)

USE FOR I-5 MAINLANE LEVELS OF SERVICE

The concept of Level of Service (LOS) is defined as a qualitative measure describing operational conditions within a traffic stream, and their perception by motorists and/or passengers. A Level of Service[1] definition generally describes these conditions in terms of such factors as speed, travel time, freedom to maneuver, comfort and convenience, and safety. Levels of Service definitions can generally be categorized as follows:

LOS	D C[2]	C D	T D
(Used for freeways, expressways and conventional highways[3])			
"A	0.41	None	Free flow.
"B	0.42-0.62	None	Free to stable flow, light to moderate volumes.
"C	0.63-0.79	None to minimal	Stable flow, moderate volumes, freedom to maneuver noticeably restricted.
"D	0.80-0.92	Minimal to substantial	Approaches unstable flow, heavy volumes, very limited freedom to maneuver.
"E	0.93-1.00	Significant	Extremely unstable flow, maneuverability and psychological comfort extremely poor.
(Used for conventional highways)			
"F	1.00	Considerable	Forced or breakdown. Delay measured in average flow, travel speed (MPH). Signalized segments experience delays 60.0 seconds/vehicle.
(Used for freeways and expressways)			
"F0	1.01-1.25	Considerable 0-1 hour delay	Forced flow, heavy congestion, long queues form behind breakdown points, stop and go.
"F1	1.26-1.35	Severe 1-2 hour delay	Very heavy congestion, very long queues.
"F2	1.36-1.45	Very severe 2-3 hour delay	Extremely heavy congestion, longer queues, more numerous breakdown points, longer stop periods.
"F3	1.46	Extremely severe 3 hours of delay	Gridlock.

[1] Level of Service can generally be calculated using "Table 3.1. LOS Criteria for Basic Freeway Sections from the latest Highway Capacity Manual. However, contact Caltrans for more specific information on determining existing "free-flow freeway speeds.

[2] Demand/Capacity ratio used for forecasts (V/C ratio used for operational analysis, where V volume)

[3] Arterial LOS is based upon average "free-flow travel speeds, and should refer to definitions in Table 11.1 in the HCM.

STATE FREEWAYS - CALTRANS

Primary Street	First Cross Street	Second Cross Street	Average Weekday Traffic Volumes (Thousands) 2002	2003	2004	2005	2006	2005-2006 Change	
INTERSTATE 5	ORANGE COUNTY LINE	BASILONE RD	138.7	141.7	132.9	132.1	135.9	3%	
INTERSTATE 5	BASILONE RD	LAS PULGAS RD	145.7	142.7	142.4	129.3	132.1	2%	
INTERSTATE 5	LAS PULGAS RD	HARBOR DR	159.6	155.6	159.4	133.1	131.2	-1%	
INTERSTATE 5	HARBOR DR	RT76/SAN LUIS REY MISSION	171.4	169.5	170.8	153.7	149.9	-2%	
INTERSTATE 5	RT76/SAN LUIS REY MISSION	MISSION AVE/BUS RT 76	163.5	165.5	168.8	164.0	160.1	-2%	
INTERSTATE 5	MISSION AVE/BUS RT 76	OCEANSIDE BLVD	182.3	187.3	186.4	194.2	190.3	-2%	
INTERSTATE 5	OCEANSIDE BLVD	CALIFORNIA ST	195.2	200.2	199.1	202.2	200.2	-1%	
INTERSTATE 5	CALIFORNIA ST	CASSIDY ST	197.2	203.2	208.3	204.1	203.2	0%	
INTERSTATE 5	CASSIDY ST	ROUTE 78	206.4	212.5	210.3	206.1	205.1	0%	
INTERSTATE 5	ROUTE 78	LAS FLORES DR	207.5	211.5	211.3	213.9	212.9	0%	
INTERSTATE 5	LAS FLORES DR	ELM AVE	204.4	207.5	208.3	208.9	207.9	0%	
INTERSTATE 5	ELM AVE	TAMARACK AVE	205.4	207.5	209.3	209.9	208.9	0%	
INTERSTATE 5	TAMARACK AVE	CANNON RD	210.5	212.5	214.3	213.9	212.9	0%	
INTERSTATE 5	CANNON RD	PALOMAR AIRPORT RD	199.4	201.4	203.2	208.9	207.9	0%	
INTERSTATE 5	PALOMAR AIRPORT ROAD	POINSETTIA LN	212.5	214.5	216.4	207.9	206.8	-1%	
INTERSTATE 5	POINSETTIA LN	LA COSTA AVE	216.6	218.6	220.4	215.9	213.9	-1%	214 KADT
INTERSTATE 5	LA COSTA AVE	LEUCADIA AVE	220.6	222.6	224.4	221.0	219.0	-1%	219 KADT
INTERSTATE 5	LEUCADIA BLVD	ENCINITAS BLVD	225.8	226.8	229.4	225.7	223.7	-1%	224 KADT
INTERSTATE 5	ENCINITAS BLVD	SANTA FE DR	228.1	229.2	232.4	230.6	227.6	-1%	
INTERSTATE 5	SANTA FE DR	BIRMINGHAM DR	223.0	225.1	228.4	226.6	223.5	-1%	
INTERSTATE 5	BIRMINGHAM DR	MANCHESTER AVE	222.0	223.1	225.5	224.3	222.3	-1%	
INTERSTATE 5	MANCHESTER AVE	LOMAS SANTA FE DR	238.5	239.5	240.9	243.9	241.8	-1%	
INTERSTATE 5	LOMAS SANTA FE DR	VIA DE LA VALLE	230.3	231.3	232.7	234.6	233.6	0%	
INTERSTATE 5	VIA DE LA VALLE	DEL MAR HEIGHTS RD	247.7	247.7	250.1	262.4	241.8E	-8%	
INTERSTATE 5	DEL MAR HEIGHTS RD	RT 56/CARMEL VALLEY RD	259.1	260.1	261.4	274.7	234.6E	-15%	
INTERSTATE 5	RT 56/CARMEL VALLEY RD	INTERSTATE 805	269.3	270.4	271.6	273.7	219.2E	-20%	
INTERSTATE 5	INTERSTATE 805	SORRENTO VALLEY BLVD	131.8	136.1	139.0	136.4	134.3	-2%	

EXISTING I-5 ADT

SOURCE: SANDAG WEBSITE

1/2

ECR S/O ARENAL

Volume Count Report

Location.....El Camino Real: Arenal to Costa Del Mar
Location Code.....9
County.....San Diego
Recorder Set.....7/17/07 00:00
Recording Start.....7/18/07 00:00
Recording End.....7/20/07 00:00
Sample Time.....15 Minutes
Operator Number.....8709
Machine Number.....20309
Channel.....A
Divide By.....2
Summation.....No
Two-Way.....No

Wednesday 07/18/07 Channel: A Direction: N

0100	0200	0300	0400	0500	0600	0700	0800	0900	1000	1100	1200	1300	1400	1500	1600	1700	1800	1900	2000	2100	2200	2300	2400	Totals
159	90	34	31	41	160	542	1222	1360	1351	1311	1417	1609	1516	1461	1722	1803	1901	1565	1294	997	742	554	254	23136
62	23	14	8	2	18	55	223	325	313	346	298	356	357	343	416	442	475	443	365	292	209	166	89	
42	21	10	9	8	30	108	251	357	374	304	354	396	378	389	402	435	481	403	327	243	195	146	61	
33	25	4	7	10	51	160	314	314	367	322	359	431	380	372	476	451	495	362	311	224	165	141	62	
22	21	6	7	21	61	219	434	364	297	339	406	426	401	357	428	475	450	357	291	238	173	101	42	

AM Peak Hour.....11:30 to 12:30 (1517 vehicles)
AM Peak Hour Factor.....93.4%
PM Peak Hour.....16:45 to 17:45 (1926 vehicles)
PM Peak Hour Factor.....97.3%

Thursday 07/19/07 Channel: A Direction: N

0100	0200	0300	0400	0500	0600	0700	0800	0900	1000	1100	1200	1300	1400	1500	1600	1700	1800	1900	2000	2100	2200	2300	2400	Totals
142	92	40	34	59	191	599	1156	1273	1211	1195	1326	1468	1571	1589	1716	1899	1851	1582	1261	1037	814	534	234	22873
50	36	12	12	10	29	74	218	327	296	293	329	372	358	410	436	491	471	424	341	306	233	157	80	
30	22	13	8	10	30	114	270	323	266	325	326	355	381	398	409	457	521	446	327	236	215	126	66	
40	19	9	4	13	62	198	298	308	319	278	324	350	424	405	435	462	450	368	311	229	180	156	61	
22	15	6	10	26	70	213	369	315	330	299	348	391	408	376	436	489	409	344	282	266	186	95	27	

AM Peak Hour.....11:30 to 12:30 (1399 vehicles)
AM Peak Hour Factor.....94.0%
PM Peak Hour.....16:30 to 17:30 (1943 vehicles)
PM Peak Hour Factor.....93.2%

23136
22873
26450
29351
101,810

AVERAGE= 50,905

2/2
ECR 8/0
ARENAL

Volume Count Report

Location.....El Camino Real: Arenal to Costa Del Mar
Location Code.....9
County.....San Diego
Recorder Set.....7/17/07 00:00
Recording Start.....7/18/07 00:00
Recording End.....7/20/07 00:00
Sample Time.....15 Minutes
Operator Number.....8709
Machine Number.....20309
Channel.....A
Divide By.....2
Summation.....No
Two-Way.....No

Wednesday 07/18/07 Channel: A Direction: S

0100	0200	0300	0400	0500	0600	0700	0800	0900	1000	1100	1200	1300	1400	1500	1600	1700	1800	1900	2000	2100	2200	2300	2400	Totals
84	47	36	60	140	394	1150	1932	2054	1798	1684	2059	1941	1596	1690	1789	1902	2206	1460	907	607	438	320	156	26450
27	10	10	8	22	54	194	397	472	464	404	459	493	400	424	440	447	566	426	237	155	119	104	51	
25	20	12	14	30	71	224	491	554	461	417	500	527	408	405	417	484	587	405	225	158	102	102	40	
17	8	8	16	39	107	342	491	515	448	414	546	509	397	438	466	473	570	319	231	145	101	69	34	
15	9	6	22	49	162	390	553	513	425	449	554	412	391	423	466	498	483	310	214	149	116	45	31	

AM Peak Hour.....11:30 to 12:30 (2120 vehicles)
AM Peak Hour Factor.....95.7%
PM Peak Hour.....16:45 to 17:45 (2221 vehicles)
PM Peak Hour Factor.....94.6%

Thursday 07/19/07 Channel: A Direction: S

0100	0200	0300	0400	0500	0600	0700	0800	0900	1000	1100	1200	1300	1400	1500	1600	1700	1800	1900	2000	2100	2200	2300	2400	Totals
85	49	33	55	114	400	1175	1765	2060	1875	1620	2454	2668	2563	1899	1852	2107	2467	1558	961	632	459	349	151	29351
30	16	5	10	10	58	201	393	462	621	347	439	733	632	564	463	495	650	448	281	172	146	116	66	
17	18	8	14	23	63	225	414	509	447	397	671	642	614	419	411	499	621	451	257	180	105	110	45	
19	5	13	20	40	116	345	457	493	403	420	653	645	637	454	498	573	607	358	217	137	107	63	30	
19	10	7	11	41	163	404	501	596	404	456	691	648	680	462	480	540	589	301	206	143	101	60	10	

AM Peak Hour.....11:15 to 12:15 (2748 vehicles)
AM Peak Hour Factor.....93.7%
PM Peak Hour.....11:45 to 12:45 (2711 vehicles)
PM Peak Hour Factor.....92.5%

ECR 1/2
S/O LA COSTA

Volume Count Report

Location.....El Camino Real: La Costa Ave to Levante St
Location Code.....10
County.....San Diego
Recorder Set.....7/17/07 00:00
Recording Start.....7/18/07 00:00
Recording End.....7/20/07 00:00
Sample Time.....15 Minutes
Operator Number.....8710
Machine Number.....20310
Channel.....A
Divide By.....2
Summation.....No
Two-Way.....No

Wednesday 07/18/07 Channel: A Direction: N

0100	0200	0300	0400	0500	0600	0700	0800	0900	1000	1100	1200	1300	1400	1500	1600	1700	1800	1900	2000	2100	2200	2300	2400	Totals
64	34	12	21	32	102	292	720	840	988	1016	1133	1302	1334	1278	1420	1363	1400	1040	905	679	493	248	105	16821
22	10	5	2	3	17	42	129	190	249	261	271	297	295	288	295	363	395	319	259	175	152	95	39	
18	9	2	5	5	20	69	136	210	254	242	259	329	369	342	366	326	340	242	210	179	124	62	25	
16	11	2	6	12	29	76	235	218	232	262	298	326	322	332	383	335	336	260	223	153	116	54	20	
8	4	3	8	12	36	105	220	222	253	251	305	350	348	316	376	339	329	219	213	172	101	37	21	

AM Peak Hour.....11:30 to 12:30 (1229 vehicles)
AM Peak Hour Factor.....93.4%
PM Peak Hour.....15:15 to 16:15 (1488 vehicles)
PM Peak Hour Factor.....97.1%

Thursday 07/19/07 Channel: A Direction: N

0100	0200	0300	0400	0500	0600	0700	0800	0900	1000	1100	1200	1300	1400	1500	1600	1700	1800	1900	2000	2100	2200	2300	2400	Totals
64	30	16	23	40	111	323	745	905	933	954	1167	1270	1293	1316	1431	1458	1404	1009	829	701	510	264	85	16881
21	17	5	8	3	19	47	133	224	217	217	293	291	295	363	362	376	374	291	233	194	156	74	29	
16	7	3	5	7	21	50	190	218	225	275	259	320	332	305	333	369	376	265	227	162	143	73	31	
15	5	6	2	15	33	99	217	219	245	246	298	329	349	339	376	343	346	247	195	170	113	68	24	
12	1	2	8	15	38	127	205	244	246	216	317	330	317	309	360	371	308	206	174	175	98	49	1	

AM Peak Hour.....11:30 to 12:30 (1226 vehicles)
AM Peak Hour Factor.....95.8%
PM Peak Hour.....15:30 to 16:30 (1480 vehicles)
PM Peak Hour Factor.....98.4%

16821
16881
21858
22609
78,169

AVERAGE = 39,085

ECR S/O LA COSTA 2/2

Volume Count Report

Location.....El Camino Real: La Costa Ave to Levante St
Location Code.....10
County.....San Diego
Recorder Set.....7/17/07 00:00
Recording Start.....7/18/07 00:00
Recording End.....7/20/07 00:00
Sample Time.....15 Minutes
Operator Number.....8710
Machine Number.....20310
Channel.....A
Divide By.....2
Summation.....No
Two-Way.....No

Wednesday 07/18/07 Channel: A Direction: S

0100	0200	0300	0400	0500	0600	0700	0800	0900	1000	1100	1200	1300	1400	1500	1600	1700	1800	1900	2000	2100	2200	2300	2400	Totals
72	40	23	27	51	149	820	1614	1742	1561	1432	1744	1777	1534	1496	1453	1505	1668	1171	754	566	352	210	97	21858
24	7	6	6	13	19	93	313	401	417	336	365	387	356	389	401	378	415	310	218	156	102	72	26	
19	18	10	5	7	18	141	403	467	388	348	385	464	376	374	351	356	408	327	184	147	78	70	27	
12	7	4	5	9	38	243	407	418	397	348	466	467	385	348	340	360	450	283	186	149	93	41	23	
17	8	3	11	22	74	343	491	456	359	400	528	459	417	385	361	411	395	251	166	114	79	27	21	

AM Peak Hour.....11:30 to 12:30 (1845 vehicles)
AM Peak Hour Factor.....87.4%
PM Peak Hour.....11:45 to 12:45 (1846 vehicles)
PM Peak Hour Factor.....87.4%

Thursday 07/19/07 Channel: A Direction: S

0100	0200	0300	0400	0500	0600	0700	0800	0900	1000	1100	1200	1300	1400	1500	1600	1700	1800	1900	2000	2100	2200	2300	2400	Totals
62	37	28	27	54	160	863	1452	1726	1577	1420	1581	1677	1546	1587	1719	1775	1914	1329	807	535	388	246	99	22609
21	9	9	5	5	14	107	303	413	429	314	393	420	391	413	445	406	428	427	223	140	137	82	44	
10	14	7	5	12	37	135	355	428	391	360	413	413	386	368	437	425	558	349	203	156	93	72	28	
15	5	9	11	14	31	279	343	466	389	368	393	424	372	402	373	438	498	303	195	112	90	50	27	
16	9	3	6	23	78	342	451	419	368	378	382	420	397	404	464	506	430	250	186	127	68	42	0	

AM Peak Hour.....07:45 to 08:45 (1758 vehicles)
AM Peak Hour Factor.....94.3%
PM Peak Hour.....16:45 to 17:45 (1990 vehicles)
PM Peak Hour Factor.....89.2%

ECR ½
N/O
CALLE BAR.

Volume Count Report

Location.....El Camino Real: Levante to Calle Barcelona
Location Code.....11
County.....San Diego
Recorder Set.....7/16/07 00:00
Recording Start.....7/17/07 00:00
Recording End.....7/20/07 00:00
Sample Time.....15 Minutes
Operator Number.....8711
Machine Number.....20311
Channel.....A
Divide By.....2
Summation.....No
Two-Way.....No

Wednesday 07/18/07 Channel: A Direction: N

0100	0200	0300	0400	0500	0600	0700	0800	0900	1000	1100	1200	1300	1400	1500	1600	1700	1800	1900	2000	2100	2200	2300	2400	Totals
75	38	14	21	28	87	323	683	798	963	1009	1136	1353	1307	1302	1411	1395	1507	1114	925	728	542	263	120	17142
27	11	4	2	4	15	40	120	181	243	254	269	324	315	335	324	381	428	318	258	189	164	95	49	
17	10	4	6	4	15	72	134	208	246	261	269	317	349	301	349	326	350	258	231	186	147	71	27	
23	10	2	6	9	27	83	222	201	242	261	281	340	324	333	389	373	361	278	216	163	122	60	25	
8	7	4	7	11	30	128	207	208	232	233	317	372	319	333	349	315	368	260	220	190	109	37	19	

AM Peak Hour.....11:30 to 12:30 (1239 vehicles)
AM Peak Hour Factor.....95.6%
PM Peak Hour.....17:00 to 18:00 (1507 vehicles)
PM Peak Hour Factor.....88.0%

Thursday 07/19/07 Channel: A Direction: N

0100	0200	0300	0400	0500	0600	0700	0800	0900	1000	1100	1200	1300	1400	1500	1600	1700	1800	1900	2000	2100	2200	2300	2400	Totals
69	36	15	25	38	91	352	692	832	895	955	1190	1271	1314	1297	1406	1479	1491	1037	892	718	539	293	74	17001
23	22	5	11	2	16	43	122	190	200	239	294	267	317	354	345	380	411	260	238	185	175	88	31	
18	9	2	5	8	17	58	175	202	210	249	282	342	346	309	338	379	377	289	225	168	144	75	36	
17	5	5	2	14	24	103	197	215	237	247	277	328	334	333	400	364	354	267	223	188	124	72	6	
11	0	3	7	14	35	148	198	225	248	220	337	344	317	301	323	356	349	221	206	177	96	58	1	

AM Peak Hour.....11:30 to 12:30 (1213 vehicles)
AM Peak Hour Factor.....88.7%
PM Peak Hour.....16:15 to 17:15 (1510 vehicles)
PM Peak Hour Factor.....91.8%

17142
17001
21912
22614
78,669
AVERAGE = 39,335

ECR
N/O CALLE BAR.

Volume Count Report

Location.....El Camino Real: Levante to Calle Barcelona
Location Code.....11
County.....San Diego
Recorder Set.....7/16/07 00:00
Recording Start.....7/17/07 00:00
Recording End.....7/20/07 00:00
Sample Time.....15 Minutes
Operator Number.....8711
Machine Number.....20311
Channel.....A
Divide By.....2
Summation.....No
Two-Way.....No

Wednesday 07/18/07 Channel: A Direction: S

0100	0200	0300	0400	0500	0600	0700	0800	0900	1000	1100	1200	1300	1400	1500	1600	1700	1800	1900	2000	2100	2200	2300	2400	Totals
62	36	21	30	50	160	736	1648	1807	1573	1432	1742	1820	1544	1501	1498	1535	1647	1176	746	535	319	195	99	21912
18	6	5	5	12	23	91	341	389	410	344	382	449	363	365	400	399	412	311	225	154	87	77	27	
17	14	10	6	5	22	122	376	493	407	354	393	460	381	377	349	359	432	311	174	146	78	56	29	
13	8	3	5	10	43	215	450	461	379	355	451	436	379	362	399	374	435	284	166	128	77	41	22	
14	8	3	14	23	72	308	481	464	377	379	516	475	421	397	350	403	368	270	181	107	77	21	21	

AM Peak Hour.....11:30 to 12:30 (1876 vehicles)
AM Peak Hour Factor.....90.9%
PM Peak Hour.....11:45 to 12:45 (1861 vehicles)
PM Peak Hour Factor.....90.2%

Thursday 07/19/07 Channel: A Direction: S

0100	0200	0300	0400	0500	0600	0700	0800	0900	1000	1100	1200	1300	1400	1500	1600	1700	1800	1900	2000	2100	2200	2300	2400	Totals
62	32	23	27	53	178	754	1519	1770	1586	1477	1646	1638	1546	1593	1790	1697	1899	1313	794	519	382	235	81	22614
22	9	5	6	5	19	101	332	436	433	347	417	425	377	424	448	410	457	422	231	130	131	76	40	
10	13	6	4	10	43	126	352	432	386	372	419	407	385	367	439	387	492	353	200	159	99	68	27	
13	3	9	12	13	40	241	371	434	388	360	400	403	387	409	440	440	531	313	185	106	89	53	13	
17	7	3	5	25	76	286	464	468	379	398	410	403	397	393	463	460	419	225	178	124	63	38	1	

AM Peak Hour.....08:00 to 09:00 (1770 vehicles)
AM Peak Hour Factor.....94.6%
PM Peak Hour.....16:45 to 17:45 (1940 vehicles)
PM Peak Hour Factor.....91.3%

LA COSTA 1/2
W/O SAX

Volume Count Report

Location.....La Costa Avenue: Saxony Rd. to Piraeus St.
Location Code.....19
County.....San Diego
Recorder Set.....8/21/07 00:00
Recording Start.....8/22/07 00:00
Recording End.....8/24/07 00:00
Sample Time.....15 Minutes
Operator Number.....8717
Machine Number.....20317
Channel.....A
Divide By.....2
Summation.....No
Two-Way.....No

Wednesday 08/22/07 Channel: A Direction: W

0100	0200	0300	0400	0500	0600	0700	0800	0900	1000	1100	1200	1300	1400	1500	1600	1700	1800	1900	2000	2100	2200	2300	2400	Totals
82	31	24	45	120	436	934	1094	1099	965	1019	939	925	868	943	1031	955	1124	892	604	480	344	206	136	15296
21	6	7	8	12	65	209	240	234	233	282	235	228	207	195	239	242	266	259	167	138	99	64	49	
28	6	5	10	18	95	243	280	272	261	223	241	249	204	238	214	260	287	246	179	137	97	62	32	
16	10	3	12	39	115	249	267	322	241	246	216	210	226	264	278	232	279	207	124	112	88	52	32	
17	9	9	15	51	161	233	307	271	230	268	247	238	231	246	300	221	292	180	134	93	60	28	23	

AM Peak Hour.....07:45 to 08:45 (1135 vehicles)
AM Peak Hour Factor.....88.1%
PM Peak Hour.....17:00 to 18:00 (1124 vehicles)
PM Peak Hour Factor.....96.2%

Thursday 08/23/07 Channel: A Direction: W

0100	0200	0300	0400	0500	0600	0700	0800	0900	1000	1100	1200	1300	1400	1500	1600	1700	1800	1900	2000	2100	2200	2300	2400	Totals
60	40	24	36	117	350	966	1048	1055	935	975	959	887	864	973	1043	1030	1114	904	647	487	408	247	156	15325
15	9	7	4	15	43	200	253	270	212	239	227	222	232	214	241	246	279	221	186	174	96	70	51	
22	13	4	15	18	90	216	260	267	246	264	241	220	207	220	266	239	283	264	166	127	120	67	47	
13	7	5	10	44	100	277	249	249	219	234	246	235	202	265	246	281	280	218	171	105	114	62	31	
10	11	8	7	40	117	273	286	269	258	238	245	210	223	274	290	264	272	201	124	81	78	48	27	

AM Peak Hour.....07:30 to 08:30 (1072 vehicles)
AM Peak Hour Factor.....93.7%
PM Peak Hour.....17:00 to 18:00 (1114 vehicles)
PM Peak Hour Factor.....98.4%

15296
15325
17402
18466
66,489
AVERAGE = 33,245

LA Costa 2/2
W/O SAX

Volume Count Report

Location.....La Costa Avenue: Saxony Rd. to Piraeus St.
Location Code.....19
County.....San Diego
Recorder Set.....8/21/07 00:00
Recording Start.....8/22/07 00:00
Recording End.....8/24/07 00:00
Sample Time.....15 Minutes
Operator Number.....8717
Machine Number.....20317
Channel.....A
Divide By.....2
Summation.....No
Two-Way.....No

Wednesday 08/22/07 Channel: A Direction: E

0100	0200	0300	0400	0500	0600	0700	0800	0900	1000	1100	1200	1300	1400	1500	1600	1700	1800	1900	2000	2100	2200	2300	2400	Totals
115	60	34	38	65	231	757	1123	1036	842	830	814	935	1011	1067	1189	1313	1432	1313	1029	769	696	422	281	17402
36	19	11	5	9	30	111	206	271	234	181	188	249	261	258	270	317	352	339	298	223	186	140	82	
25	19	6	13	12	39	152	291	260	193	214	188	241	237	258	289	305	383	335	261	192	158	106	88	
31	14	5	9	13	69	247	304	255	207	228	234	233	254	286	314	327	359	337	235	173	177	87	62	
23	8	12	11	31	93	247	322	260	208	207	204	212	259	265	316	364	338	302	235	181	175	89	49	

AM Peak Hour.....07:15 to 08:15 (1188 vehicles)
AM Peak Hour Factor.....92.2%
PM Peak Hour.....16:45 to 17:45 (1458 vehicles)
PM Peak Hour Factor.....95.2%

Thursday 08/23/07 Channel: A Direction: E

0100	0200	0300	0400	0500	0600	0700	0800	0900	1000	1100	1200	1300	1400	1500	1600	1700	1800	1900	2000	2100	2200	2300	2400	Totals
152	78	42	47	60	239	701	1226	1002	919	883	1004	1019	1131	1272	1233	1400	1459	1262	1082	850	644	480	281	18466
39	24	13	11	6	32	107	232	264	243	210	248	241	267	317	298	338	366	335	292	235	160	122	82	
48	21	11	11	12	34	155	309	212	207	211	243	239	298	332	315	343	394	331	285	201	168	128	79	
34	16	7	15	19	65	211	346	249	233	229	253	282	259	301	319	360	352	299	255	221	159	118	63	
31	17	11	10	23	108	228	339	277	236	233	260	257	307	322	301	359	347	297	250	193	157	112	57	

AM Peak Hour.....07:15 to 08:15 (1258 vehicles)
AM Peak Hour Factor.....90.9%
PM Peak Hour.....16:30 to 17:30 (1479 vehicles)
PM Peak Hour Factor.....93.8%

LA COSTA
E/O ROMERIA ST.

1/2

Volume Count Report

Location.....La Costa Avenue: Cadencia St. to Romeria St.
Location Code.....20
County.....San Diego
Recorder Set.....7/17/07 00:00
Recording Start.....7/18/07 00:00
Recording End.....7/20/07 00:00
Sample Time.....15 Minutes
Operator Number.....8718
Machine Number.....20318
Channel.....A
Divide By.....2
Summation.....No
Two-Way.....No

Wednesday 07/18/07 Channel: A Direction: W

0100	0200	0300	0400	0500	0600	0700	0800	0900	1000	1100	1200	1300	1400	1500	1600	1700	1800	1900	2000	2100	2200	2300	2400	Totals
23	15	7	8	21	133	329	452	479	401	336	359	381	323	343	426	390	335	285	267	201	158	107	55	5834
9	4	2	1	3	21	53	106	132	105	80	93	94	69	98	111	97	77	75	59	49	39	32	18	
6	1	3	2	3	25	80	99	120	97	76	106	101	81	85	106	97	87	83	72	53	36	28	16	
2	6	1	1	4	36	92	121	116	117	85	71	96	87	84	102	89	95	65	80	54	38	22	12	
6	4	1	4	11	51	104	126	111	82	95	89	90	86	76	107	107	76	62	56	45	45	25	9	

AM Peak Hour.....07:30 to 08:30 (499 vehicles)
AM Peak Hour Factor.....94.5%
PM Peak Hour.....15:00 to 16:00 (426 vehicles)
PM Peak Hour Factor.....95.9%

Thursday 07/19/07 Channel: A Direction: W

0100	0200	0300	0400	0500	0600	0700	0800	0900	1000	1100	1200	1300	1400	1500	1600	1700	1800	1900	2000	2100	2200	2300	2400	Totals
34	16	9	9	27	130	330	462	458	394	366	358	354	351	348	410	350	433	303	236	160	142	97	39	5816
11	2	4	0	2	18	58	112	108	130	94	90	98	78	73	97	94	126	77	54	40	33	29	11	
10	4	1	1	5	26	90	101	113	96	80	85	92	85	93	111	82	102	80	72	38	41	17	8	
6	7	2	4	12	37	93	118	126	96	95	99	78	97	91	89	91	110	76	59	37	35	29	15	
7	3	2	4	8	49	89	131	111	72	97	84	86	91	91	113	83	95	70	51	45	33	22	5	

AM Peak Hour.....08:15 to 09:15 (480 vehicles)
AM Peak Hour Factor.....92.3%
PM Peak Hour.....17:00 to 18:00 (433 vehicles)
PM Peak Hour Factor.....85.9%

5834
5816
6644
6689
24,983

AVERAGE = 12,492

LA COSTA
E/O ROMERIA ST. 2/2

Volume Count Report

Location.....La Costa Avenue: Cadencia St. to Romeria St.
Location Code.....20
County.....San Diego
Recorder Set.....7/17/07 00:00
Recording Start.....7/18/07 00:00
Recording End.....7/20/07 00:00
Sample Time.....15 Minutes
Operator Number.....8718
Machine Number.....20318
Channel.....A
Divide By.....2
Summation.....No
Two-Way.....No

Wednesday 07/18/07 Channel: A Direction: E

0100	0200	0300	0400	0500	0600	0700	0800	0900	1000	1100	1200	1300	1400	1500	1600	1700	1800	1900	2000	2100	2200	2300	2400	Totals
58	28	16	10	14	49	203	282	335	275	264	281	363	332	413	515	573	711	526	466	358	286	215	116	6689
28	8	1	4	1	6	23	56	70	75	54	75	78	83	109	121	134	174	135	121	95	89	57	39	
15	9	7	1	6	11	42	70	74	74	63	64	98	84	98	140	130	191	147	130	89	68	57	29	
9	3	7	3	3	12	82	71	87	63	85	68	97	81	105	125	152	191	127	111	90	62	52	26	
6	8	1	2	4	20	56	85	104	63	62	74	90	84	101	129	157	156	117	104	84	67	49	22	

AM Peak Hour.....08:15 to 09:15 (340 vehicles)
AM Peak Hour Factor.....81.7%
PM Peak Hour.....16:45 to 17:45 (713 vehicles)
PM Peak Hour Factor.....93.3%

Thursday 07/19/07 Channel: A Direction: E

0100	0200	0300	0400	0500	0600	0700	0800	0900	1000	1100	1200	1300	1400	1500	1600	1700	1800	1900	2000	2100	2200	2300	2400	Totals
62	25	23	12	16	51	200	233	314	274	275	334	387	375	393	502	575	685	560	404	334	281	217	112	6644
21	12	10	3	2	4	20	47	58	85	55	86	116	102	95	110	112	147	167	111	95	73	59	37	
19	2	5	4	3	10	40	46	84	49	67	82	94	92	101	117	150	198	148	119	85	75	59	31	
11	4	5	2	4	15	66	61	79	68	66	71	85	74	97	127	163	173	124	90	75	73	58	21	
11	7	3	3	7	22	74	79	93	72	87	95	92	107	100	148	150	167	121	84	79	60	41	23	

AM Peak Hour.....11:30 to 12:30 (376 vehicles)
AM Peak Hour Factor.....81.0%
PM Peak Hour.....17:15 to 18:15 (705 vehicles)
PM Peak Hour Factor.....89.0%

MEL
S/O
PAR

1/2

Volume Count Report

Location.....Melrose Dr: P. A. R. to Rancho Bravado
Location Code.....13
County.....San Diego
Recorder Set.....7/09/07 00:00
Recording Start.....7/10/07 00:00
Recording End.....7/12/07 00:00
Sample Time.....15 Minutes
Operator Number.....8712
Machine Number.....20312
Channel.....A
Divide By.....2
Summation.....No
Two-Way.....No

Tuesday 07/10/07 Channel: A Direction: N

0100	0200	0300	0400	0500	0600	0700	0800	0900	1000	1100	1200	1300	1400	1500	1600	1700	1800	1900	2000	2100	2200	2300	2400	Totals
41	16	8	18	38	165	385	866	791	557	475	450	557	553	556	678	699	710	512	321	209	164	124	65	8958
13	8	1	0	3	19	55	152	203	151	129	116	122	142	137	167	166	156	163	91	53	51	44	20	
11	3	2	3	5	35	84	208	186	131	116	98	145	148	149	154	165	205	135	95	56	41	32	13	
11	4	2	6	9	42	107	234	219	139	113	120	134	126	131	190	184	175	122	73	48	39	25	19	
6	1	3	9	21	69	139	272	183	136	117	116	156	137	139	167	184	174	92	62	52	33	23	13	

AM Peak Hour.....07:15 to 08:15 (917 vehicles)
AM Peak Hour Factor.....84.3%
PM Peak Hour.....16:30 to 17:30 (729 vehicles)
PM Peak Hour Factor.....88.9%

Wednesday 07/11/07 Channel: A Direction: N

0100	0200	0300	0400	0500	0600	0700	0800	0900	1000	1100	1200	1300	1400	1500	1600	1700	1800	1900	2000	2100	2200	2300	2400	Totals
33	10	13	21	44	155	378	851	753	560	504	459	496	494	556	678	727	802	522	322	227	187	147	79	9017
7	3	1	5	5	19	59	166	206	167	128	98	120	103	144	155	175	183	164	74	69	55	51	20	
7	2	4	4	10	20	77	193	183	136	137	90	125	137	139	170	172	243	119	92	57	42	43	23	
10	3	4	4	10	50	124	215	199	111	133	138	109	114	146	181	183	213	136	77	51	46	30	25	
9	2	4	8	19	66	118	277	165	146	106	133	142	140	126	172	197	163	103	79	50	44	23	11	

AM Peak Hour.....07:15 to 08:15 (891 vehicles)
AM Peak Hour Factor.....80.4%
PM Peak Hour.....16:45 to 17:45 (836 vehicles)
PM Peak Hour Factor.....86.0%

8958
9017
881
8708
35,484

AVERAGE = 17,742

MEL
S/O
PAR

2/2

Volume Count Report

Location.....Melrose Dr: P. A. R. to Rancho Bravado
Location Code.....13
County.....San Diego
Recorder Set.....7/09/07 00:00
Recording Start.....7/10/07 00:00
Recording End.....7/12/07 00:00
Sample Time.....15 Minutes
Operator Number.....8712
Machine Number.....20312
Channel.....A
Divide By.....2
Summation.....No
Two-Way.....No

Tuesday 07/10/07 Channel: A Direction: S

0100	0200	0300	0400	0500	0600	0700	0800	0900	1000	1100	1200	1300	1400	1500	1600	1700	1800	1900	2000	2100	2200	2300	2400	Totals
38	26	10	12	27	119	527	721	544	488	399	451	484	510	466	576	746	879	588	389	290	260	150	101	8801
16	10	5	1	2	10	86	180	150	117	92	104	116	129	88	107	164	249	155	114	77	82	48	37	
6	4	3	4	6	20	106	151	154	141	99	118	119	164	113	134	185	230	157	110	79	67	35	28	
7	3	1	4	11	37	178	200	120	118	88	99	138	108	123	183	189	205	138	95	66	49	31	19	
9	9	1	3	8	52	157	190	120	112	120	130	111	109	142	152	208	195	138	70	68	62	36	17	

AM Peak Hour.....07:00 to 08:00 (721 vehicles)
AM Peak Hour Factor.....90.1%
PM Peak Hour.....16:45 to 17:45 (892 vehicles)
PM Peak Hour Factor.....89.6%

Wednesday 07/11/07 Channel: A Direction: S

0100	0200	0300	0400	0500	0600	0700	0800	0900	1000	1100	1200	1300	1400	1500	1600	1700	1800	1900	2000	2100	2200	2300	2400	Totals
45	15	29	18	27	114	494	701	574	539	401	423	464	446	488	535	605	879	611	457	327	261	168	87	8708
16	4	4	5	3	9	69	174	153	129	94	111	110	116	117	128	151	200	178	114	73	75	58	29	
13	4	7	5	8	15	114	179	158	119	103	98	129	112	115	122	141	242	152	114	84	70	41	22	
6	3	10	3	6	42	164	181	152	148	91	89	103	113	139	139	171	230	158	110	74	63	34	15	
10	4	8	5	10	48	147	167	111	143	113	125	122	105	117	146	142	207	123	119	96	53	35	21	

AM Peak Hour.....07:00 to 08:00 (701 vehicles)
AM Peak Hour Factor.....96.8%
PM Peak Hour.....17:00 to 18:00 (879 vehicles)
PM Peak Hour Factor.....90.8%

MEL 1/2

S/O ALGA

Volume Count Report

Location.....Melrose Dr: Alga Rd. to Corintia St.
Location Code.....14
County.....San Diego
Recorder Set.....7/16/07 00:00
Recording Start.....7/17/07 00:00
Recording End.....7/19/07 00:00
Sample Time.....15 Minutes
Operator Number.....8712
Machine Number.....20312
Channel.....A
Divide By.....2
Summation.....No
Two-Way.....No

Tuesday 07/17/07 Channel: A Direction: N

0100	0200	0300	0400	0500	0600	0700	0800	0900	1000	1100	1200	1300	1400	1500	1600	1700	1800	1900	2000	2100	2200	2300	2400	Totals
0	25	10	9	45	126	475	851	825	566	438	492	585	524	549	642	724	699	543	423	292	280	183	93	9399
0	9	1	1	6	22	50	181	207	166	119	123	153	136	132	165	181	187	158	110	68	80	51	33	
0	6	3	1	8	25	86	175	225	125	90	114	130	134	138	153	152	167	147	104	71	80	52	22	
0	4	3	3	13	28	155	229	197	125	114	128	146	132	155	175	203	188	115	106	80	65	49	26	
0	6	3	4	18	51	184	266	196	150	115	127	156	122	124	149	188	157	123	103	73	55	31	12	

AM Peak Hour.....07:30 to 08:30 (927 vehicles)
AM Peak Hour Factor.....87.1%
PM Peak Hour.....16:30 to 17:30 (745 vehicles)
PM Peak Hour Factor.....91.7%

Wednesday 07/18/07 Channel: A Direction: N

0100	0200	0300	0400	0500	0600	0700	0800	0900	1000	1100	1200	1300	1400	1500	1600	1700	1800	1900	2000	2100	2200	2300	2400	Totals
54	31	17	14	30	144	479	834	840	563	516	463	611	549	557	650	678	749	576	405	331	246	170	119	9626
20	9	6	1	6	25	54	175	265	162	130	100	156	135	141	153	171	189	180	110	77	71	52	31	
13	6	3	2	3	26	90	202	217	146	128	115	144	151	115	137	157	192	148	89	97	61	51	28	
12	7	5	3	7	34	165	206	168	131	133	124	153	130	170	166	186	176	119	106	84	64	43	41	
9	9	4	8	14	59	170	251	190	124	125	124	158	133	131	194	164	192	129	100	73	50	24	19	

AM Peak Hour.....07:30 to 08:30 (939 vehicles)
AM Peak Hour Factor.....88.6%
PM Peak Hour.....17:00 to 18:00 (749 vehicles)
PM Peak Hour Factor.....97.5%

9399
9626
10496
10963
40,484
AVERAGE = 20,242

MEL .2
S/O 2
ALGA

Volume Count Report

Location.....Melrose Dr: Alga Rd. to Corintia St.
Location Code.....14
County.....San Diego
Recorder Set.....7/16/07 00:00
Recording Start.....7/17/07 00:00
Recording End.....7/19/07 00:00
Sample Time.....15 Minutes
Operator Number.....8712
Machine Number.....20312
Channel.....A
Divide By.....2
Summation.....No
Two-Way.....No

Tuesday 07/17/07 Channel: A Direction: S

0100	0200	0300	0400	0500	0600	0700	0800	0900	1000	1100	1200	1300	1400	1500	1600	1700	1800	1900	2000	2100	2200	2300	2400	Totals
0	23	12	6	40	115	481	743	773	651	517	565	541	541	616	778	993	1158	666	434	335	226	170	112	10496
0	6	4	1	5	13	72	193	168	197	128	130	138	131	130	171	236	297	178	123	82	59	52	41	
0	5	4	2	6	16	111	160	193	156	121	150	130	151	163	188	248	330	191	121	87	64	41	32	
0	7	1	2	13	28	142	198	205	137	136	127	161	135	158	219	218	278	139	96	90	41	45	16	
0	5	3	1	16	58	156	192	207	161	132	158	112	124	165	200	291	253	158	94	76	62	32	23	

AM Peak Hour.....08:15 to 09:15 (802 vehicles)
AM Peak Hour Factor.....96.9%
PM Peak Hour.....16:45 to 17:45 (1196 vehicles)
PM Peak Hour Factor.....90.6%

Wednesday 07/18/07 Channel: A Direction: S

0100	0200	0300	0400	0500	0600	0700	0800	0900	1000	1100	1200	1300	1400	1500	1600	1700	1800	1900	2000	2100	2200	2300	2400	Totals
51	30	23	9	36	134	530	731	774	628	538	595	620	618	668	843	944	1155	728	449	333	275	149	102	10963
19	8	8	2	5	18	76	163	204	194	137	148	174	165	152	193	192	292	229	125	80	72	41	36	
12	7	7	1	5	29	121	182	182	141	120	154	143	150	166	209	220	311	203	118	94	81	36	32	
11	8	7	3	12	32	160	178	196	148	154	128	135	158	143	214	259	284	146	115	84	63	35	21	
9	7	1	3	14	55	173	208	192	145	127	165	168	145	207	227	273	268	150	91	75	59	37	13	

AM Peak Hour.....07:45 to 08:45 (790 vehicles)
AM Peak Hour Factor.....95.0%
PM Peak Hour.....16:45 to 17:45 (1160 vehicles)
PM Peak Hour Factor.....93.2%

RSF
N/O SAN ELIJO 1/2

Volume Count Report

Location.....Rancho Santa Fe Road: La Costa Meadows Dr. to San Elijo
Location Code.....21
County.....San Diego
Recorder Set.....7/16/07 00:00
Recording Start.....7/18/07 00:00
Recording End.....7/20/07 00:00
Sample Time.....15 Minutes
Operator Number.....8718
Machine Number.....20318
Channel.....A
Divide By.....2
Summation.....No
Two-Way.....No

Wednesday 07/18/07 Channel: A Direction: N

0100	0200	0300	0400	0500	0600	0700	0800	0900	1000	1100	1200	1300	1400	1500	1600	1700	1800	1900	2000	2100	2200	2300	2400	Totals
98	43	16	29	52	175	520	912	981	892	958	859	973	936	1067	1510	1375	1329	1058	774	607	479	373	204	16220
42	17	3	5	10	28	80	176	267	223	283	196	227	230	245	310	316	332	307	220	162	130	106	73	
23	9	7	4	8	33	106	219	215	210	268	212	239	244	291	332	345	354	288	228	164	130	109	56	
14	9	5	4	14	50	160	222	237	222	207	212	259	238	269	436	355	333	238	181	144	114	83	49	
19	8	1	16	20	64	174	295	262	237	200	239	248	224	262	432	359	310	225	145	137	105	75	26	

AM Peak Hour.....07:45 to 08:45 (1014 vehicles)
AM Peak Hour Factor.....85.9%
PM Peak Hour.....15:30 to 16:30 (1529 vehicles)
PM Peak Hour Factor.....87.7%

Thursday 07/19/07 Channel: A Direction: N

0100	0200	0300	0400	0500	0600	0700	0800	0900	1000	1100	1200	1300	1400	1500	1600	1700	1800	1900	2000	2100	2200	2300	2400	Totals
103	42	30	41	50	180	516	942	960	927	838	855	1088	1207	1137	1454	1367	1366	1096	764	539	478	346	204	16530
31	16	12	6	10	24	87	175	265	286	189	205	217	340	272	358	325	350	321	210	138	122	96	77	
24	10	8	10	8	42	97	218	237	204	225	191	280	312	229	434	392	375	282	223	136	136	104	61	
19	9	5	13	14	38	161	261	219	223	205	213	310	276	365	337	335	323	248	168	122	124	85	27	
29	7	5	12	18	76	171	288	239	214	219	246	281	279	271	325	315	318	245	163	143	96	61	39	

AM Peak Hour.....07:30 to 08:30 (1051 vehicles)
AM Peak Hour Factor.....91.2%
PM Peak Hour.....15:00 to 16:00 (1454 vehicles)
PM Peak Hour Factor.....83.8%

16220
16530
18130
18467
69347

AVERAGE = 34674

RSF
N/O SAN ELIJO 2/2

Volume Count Report

Location.....Rancho Santa Fe Road: La Costa Meadows Dr. to San Elijo
Location Code.....21
County.....San Diego
Recorder Set.....7/16/07 00:00
Recording Start.....7/18/07 00:00
Recording End.....7/20/07 00:00
Sample Time.....15 Minutes
Operator Number.....8718
Machine Number.....20318
Channel.....A
Divide By.....2
Summation.....No
Two-Way.....No

Wednesday 07/18/07 Channel: A Direction: S

0100	0200	0300	0400	0500	0600	0700	0800	0900	1000	1100	1200	1300	1400	1500	1600	1700	1800	1900	2000	2100	2200	2300	2400	Totals
87	43	27	37	104	381	1369	1640	1536	1173	1087	1089	1074	1074	958	1067	1057	1276	949	650	534	473	289	156	18130
32	10	9	6	16	44	236	441	396	336	296	254	256	284	225	271	219	326	255	185	114	120	79	52	
31	13	6	2	11	71	350	375	432	284	250	265	267	270	255	248	272	335	256	177	130	137	85	50	
13	14	6	11	28	102	387	433	368	282	268	284	272	246	238	258	279	319	226	137	169	107	64	27	
11	6	6	18	49	164	396	391	340	271	273	286	279	274	240	290	287	296	212	151	121	109	61	27	

AM Peak Hour.....07:30 to 08:30 (1652 vehicles)
AM Peak Hour Factor.....95.4%
PM Peak Hour.....17:00 to 18:00 (1276 vehicles)
PM Peak Hour Factor.....95.2%

Thursday 07/19/07 Channel: A Direction: S

0100	0200	0300	0400	0500	0600	0700	0800	0900	1000	1100	1200	1300	1400	1500	1600	1700	1800	1900	2000	2100	2200	2300	2400	Totals
94	45	36	46	102	368	1389	1635	1540	1123	1090	1049	1154	1030	1055	1089	1200	1307	928	660	556	474	339	158	18467
30	10	7	12	10	53	234	415	368	305	252	239	318	249	237	252	245	333	272	211	117	116	104	51	
29	13	10	10	22	68	332	412	399	262	283	264	285	246	252	243	346	349	249	179	152	132	102	40	
16	10	13	12	31	96	448	388	380	296	256	251	259	261	257	302	283	311	232	146	148	120	74	38	
19	12	6	12	39	151	375	420	393	260	299	295	292	274	309	292	326	314	175	124	139	106	59	29	

AM Peak Hour.....06:30 to 07:30 (1650 vehicles)
AM Peak Hour Factor.....92.1%
PM Peak Hour.....16:45 to 17:45 (1319 vehicles)
PM Peak Hour Factor.....94.5%

RSF
S/O SAN ELIJO $\frac{1}{2}$

Volume Count Report

Location.....Rancho Santa Fe: Avenida Soledad to Camino Junipero
Location Code.....22
County.....San Diego
Recorder Set.....7/16/07 00:00
Recording Start.....7/18/07 00:00
Recording End.....7/20/07 00:00
Sample Time.....15 Minutes
Operator Number.....8720
Machine Number.....20320
Channel.....A
Divide By.....2
Summation.....No
Two-Way.....No

Wednesday 07/18/07 Channel: A Direction: N

0100	0200	0300	0400	0500	0600	0700	0800	0900	1000	1100	1200	1300	1400	1500	1600	1700	1800	1900	2000	2100	2200	2300	2400	Totals
146	60	29	29	45	186	653	960	941	942	920	889	1045	1011	1255	1610	1762	1806	1494	1115	915	717	514	287	19331
61	21	10	7	10	26	92	184	238	245	201	207	260	254	282	342	451	454	451	306	254	177	138	104	
38	15	9	6	8	37	147	196	232	216	272	229	296	272	332	400	409	499	380	303	246	192	142	74	
23	13	6	3	10	54	200	264	221	254	244	241	251	260	347	422	442	440	346	257	227	186	130	63	
24	11	4	13	17	69	214	316	250	227	203	212	238	225	294	446	460	413	317	249	188	162	104	46	

AM Peak Hour.....07:30 to 08:30 (1050 vehicles)
AM Peak Hour Factor.....83.1%
PM Peak Hour.....16:30 to 17:30 (1855 vehicles)
PM Peak Hour Factor.....92.9%

Thursday 07/19/07 Channel: A Direction: N

0100	0200	0300	0400	0500	0600	0700	0800	0900	1000	1100	1200	1300	1400	1500	1600	1700	1800	1900	2000	2100	2200	2300	2400	Totals
170	66	33	46	50	196	656	958	979	928	851	903	1047	1120	1195	1643	1781	1884	1470	1126	843	667	516	302	19430
59	22	16	6	11	21	94	192	270	264	185	222	233	293	275	380	445	421	395	315	212	189	141	99	
39	15	5	13	9	44	138	236	232	215	227	220	272	304	285	394	464	526	384	319	231	192	142	90	
33	14	6	15	17	51	219	277	232	211	232	210	255	274	298	418	445	483	379	251	202	164	129	50	
39	15	6	12	13	80	205	253	245	238	207	251	287	249	337	451	427	454	312	241	198	122	104	63	

AM Peak Hour.....07:15 to 08:15 (1036 vehicles)
AM Peak Hour Factor.....93.5%
PM Peak Hour.....17:00 to 18:00 (1884 vehicles)
PM Peak Hour Factor.....89.5%

19331
19430
20502
20631
79894
AVERAGE = 39,947

RSF
S/O SAN ELDO 2/2

Volume Count Report

Location.....Rancho Santa Fe: Avenida Soledad to Camino Junipero
Location Code.....22
County.....San Diego
Recorder Set.....7/16/07 00:00
Recording Start.....7/18/07 00:00
Recording End.....7/20/07 00:00
Sample Time.....15 Minutes
Operator Number.....8720
Machine Number.....20320
Channel.....A
Divide By.....2
Summation.....No.
Two-Way.....No

Wednesday 07/18/07 Channel: A Direction: S

0100	0200	0300	0400	0500	0600	0700	0800	0900	1000	1100	1200	1300	1400	1500	1600	1700	1800	1900	2000	2100	2200	2300	2400	Totals
87	42	24	37	132	497	1643	2078	1969	1404	1215	1222	1147	1082	1059	1223	1148	1346	981	697	571	437	303	158	20502
30	11	4	9	14	67	297	562	535	391	320	287	281	299	262	312	257	349	270	208	136	105	88	53	
30	13	7	2	15	87	399	476	506	363	291	302	282	253	272	298	288	351	252	180	137	130	80	41	
15	13	7	9	40	161	459	536	494	328	287	303	279	254	239	305	317	340	238	144	168	105	70	36	
12	5	6	17	63	182	488	504	434	322	317	330	305	276	286	308	286	306	221	165	130	97	65	28	

AM Peak Hour.....07:30 to 08:30 (2081 vehicles)
AM Peak Hour Factor.....97.1%
PM Peak Hour.....17:00 to 18:00 (1346 vehicles)
PM Peak Hour Factor.....95.9%

Thursday 07/19/07 Channel: A Direction: S

0100	0200	0300	0400	0500	0600	0700	0800	0900	1000	1100	1200	1300	1400	1500	1600	1700	1800	1900	2000	2100	2200	2300	2400	Totals
83	44	35	51	138	469	1661	2079	1885	1369	1211	1163	1254	1068	1096	1250	1233	1347	986	707	540	432	358	172	20631
23	11	9	11	15	71	292	536	466	389	276	273	328	288	239	298	271	349	288	196	119	110	108	47	
23	12	8	11	21	88	349	500	493	349	314	293	324	243	276	295	337	349	265	205	138	122	103	50	
17	11	11	14	47	136	516	527	469	328	303	290	300	246	280	334	294	311	237	159	142	104	76	41	
20	10	7	15	55	174	504	516	457	303	318	307	302	291	301	323	331	338	196	147	141	96	71	34	

AM Peak Hour.....07:00 to 08:00 (2079 vehicles)
AM Peak Hour Factor.....97.0%
PM Peak Hour.....17:00 to 18:00 (1347 vehicles)
PM Peak Hour Factor.....96.5%

1/2

RSF
S/O OLIVE

Volume Count Report

Location.....Rancho Santa Fe: Olivenhain Rd. to Avenida La Posta
Location Code.....23
County.....San Diego
Recorder Set.....7/16/07 00:00
Recording Start.....7/18/07 00:00
Recording End.....7/20/07 00:00
Sample Time.....15 Minutes
Operator Number.....8721
Machine Number.....20321
Channel.....A
Divide By.....2
Summation.....No
Two-Way.....No

Wednesday 07/18/07 Channel: A Direction: N

0100	0200	0300	0400	0500	0600	0700	0800	0900	1000	1100	1200	1300	1400	1500	1600	1700	1800	1900	2000	2100	2200	2300	2400	Totals
29	15	9	9	13	52	161	351	413	483	445	489	541	542	583	734	747	644	549	365	282	168	149	96	7869
4	6	5	0	2	8	31	60	83	120	116	124	129	132	124	172	191	163	151	106	70	47	45	35	
6	5	2	3	2	9	23	88	114	116	106	116	132	116	165	170	183	154	164	109	73	43	39	22	
11	2	0	4	6	18	49	96	96	112	115	138	134	151	136	196	179	174	140	77	61	41	37	21	
8	2	2	2	3	17	58	107	120	135	108	111	146	143	158	196	194	153	94	73	78	37	28	18	

AM Peak Hour.....11:30 to 12:30 (510 vehicles)
AM Peak Hour Factor.....92.4%
PM Peak Hour.....15:30 to 16:30 (766 vehicles)
PM Peak Hour Factor.....97.7%

Thursday 07/19/07 Channel: A Direction: N

0100	0200	0300	0400	0500	0600	0700	0800	0900	1000	1100	1200	1300	1400	1500	1600	1700	1800	1900	2000	2100	2200	2300	2400	Totals
49	16	4	8	13	53	171	351	440	481	444	476	544	545	556	723	737	649	579	328	200	141	129	75	7712
26	4	3	1	1	6	33	67	101	123	111	119	133	138	128	159	186	149	179	95	54	34	34	23	
9	6	0	2	6	10	40	115	100	130	119	121	140	142	139	195	182	168	156	82	48	40	31	17	
7	3	0	2	3	13	48	84	118	119	103	115	130	136	152	189	184	159	146	82	44	38	32	21	
7	3	1	3	3	24	50	85	121	109	111	121	141	129	137	180	185	173	98	69	54	29	32	14	

AM Peak Hour.....11:30 to 12:30 (509 vehicles)
AM Peak Hour Factor.....90.9%
PM Peak Hour.....15:15 to 16:15 (750 vehicles)
PM Peak Hour Factor.....96.2%

7869
7712
9180
9295
34056
AVERAGE = 17,028

RSF
S/O OLIVE
2/2

Volume Count Report

Location.....Rancho Santa Fe: Olivenhain Rd. to Avenida La Posta
Location Code.....23
County.....San Diego
Recorder Set.....7/16/07 00:00
Recording Start.....7/18/07 00:00
Recording End.....7/20/07 00:00
Sample Time.....15 Minutes
Operator Number.....8721
Machine Number.....20321
Channel.....A
Divide By.....2
Summation.....No
Two-Way.....No

Wednesday 07/18/07 Channel: A Direction: S

0100	0200	0300	0400	0500	0600	0700	0800	0900	1000	1100	1200	1300	1400	1500	1600	1700	1800	1900	2000	2100	2200	2300	2400	Totals
40	25	9	9	17	76	573	703	725	618	536	567	630	596	517	592	563	679	527	344	343	244	157	90	9180
13	6	5	2	2	7	64	179	165	171	130	122	154	162	106	133	147	168	141	89	98	67	53	32	
9	11	2	4	1	13	112	162	200	163	129	141	154	141	124	140	139	198	139	99	91	74	40	20	
8	4	0	2	6	21	204	177	196	138	130	154	163	141	135	150	122	142	138	72	76	53	33	16	
10	4	2	1	8	35	193	185	164	146	147	150	159	152	152	169	155	171	109	84	78	50	31	22	

AM Peak Hour.....07:45 to 08:45 (746 vehicles)
AM Peak Hour Factor.....93.3%
PM Peak Hour.....17:00 to 18:00 (679 vehicles)
PM Peak Hour Factor.....85.7%

Thursday 07/19/07 Channel: A Direction: S

0100	0200	0300	0400	0500	0600	0700	0800	0900	1000	1100	1200	1300	1400	1500	1600	1700	1800	1900	2000	2100	2200	2300	2400	Totals
48	19	9	10	10	85	574	747	702	603	547	548	631	578	575	614	619	708	494	367	271	283	173	80	9295
16	6	4	4	0	7	70	154	173	177	139	143	150	131	140	158	152	192	140	98	75	74	51	24	
12	4	3	1	1	15	118	212	183	156	151	120	166	161	149	163	155	197	146	102	73	87	44	22	
10	5	0	4	2	22	189	205	182	138	121	137	159	130	137	139	155	164	111	86	75	66	35	15	
10	4	2	1	7	41	197	176	164	132	136	148	156	156	149	154	157	155	97	81	48	56	43	19	

AM Peak Hour.....06:45 to 07:45 (768 vehicles)
AM Peak Hour Factor.....90.6%
PM Peak Hour.....16:45 to 17:45 (710 vehicles)
PM Peak Hour Factor.....90.1%

Transportation Studies, Inc.
1350 Reynolds Avenue, Ste.115
Irvine, CA. 92614

Location : SAN ELIJO ROAD
Segment : E/O RANCHO SANTE FE RD
Client : URBAN SYSTEMS

Site: IRVINE
Date: 06/27/07

Day: Wednesday

Interval	EB				WB				Combined			
Begin	AM		PM		AM		PM		AM		PM	
12:00	19	61	80	382	15	36	90	384	34	97	170	766
12:15	18		102		7		108		25		210	
12:30	10		101		6		97		16		198	
12:45	14		99		8		89		22		188	
01:00	14	39	88	416	8	22	87	360	22	61	175	776
01:15	13		122		7		86		20		208	
01:30	5		96		6		88		11		184	
01:45	7		110		1		99		8		209	
02:00	8	30	77	408	4	15	79	335	12	45	156	743
02:15	7		94		4		70		11		164	
02:30	7		117		3		80		10		197	
02:45	8		120		4		106		12		226	
03:00	7	13	101	570	2	16	80	395	9	29	181	965
03:15	2		129		6		92		8		221	
03:30	2		174		2		117		4		291	
03:45	2		166		6		106		8		272	
04:00	2	11	178	679	5	46	78	323	7	57	256	1,002
04:15	1		182		8		61		9		243	
04:30	3		160		13		94		16		254	
04:45	5		159		20		90		25		249	
05:00	2	35	183	842	29	197	102	363	31	232	285	1,205
05:15	9		218		38		98		47		316	
05:30	9		227		52		85		61		312	
05:45	15		214		78		78		93		292	
06:00	36	203	196	681	101	582	82	315	137	785	278	996
06:15	36		166		144		92		180		258	
06:30	53		173		159		79		212		252	
06:45	78		146		178		62		256		208	
07:00	48	250	131	580	202	794	74	244	250	1,044	205	824
07:15	50		164		186		67		236		231	
07:30	76		148		200		58		276		206	
07:45	76		137		206		45		282		182	
08:00	69	280	120	455	202	756	58	173	271	1,036	178	628
08:15	64		135		214		36		278		171	
08:30	68		108		169		32		237		140	
08:45	79		92		171		47		250		139	
09:00	58	273	109	347	156	562	40	126	214	835	149	473
09:15	61		96		140		34		201		130	
09:30	80		62		148		38		228		100	
09:45	74		80		118		14		192		94	
10:00	53	279	76	252	108	408	40	100	161	687	116	352
10:15	73		66		112		27		185		93	
10:30	80		56		104		22		184		78	
10:45	73		54		84		11		157		65	
11:00	76	334	40	132	102	412	11	44	178	746	51	176
11:15	92		38		108		14		200		52	
11:30	90		24		100		10		190		34	
11:45	76		30		102		9		178		39	
Totals	1,808		5,744		3,846		3,162		5,654		8,906	
Split%	32.0		64.5		68.0		35.5					

Day Totals		7,552				7,008				14,560		
Day Splits		51.9				48.1						
Peak Hour	11:00		05:15		07:30		02:45		07:30		05:00	
Volume	334		855		822		395		1,107		1,205	
Factor	0.91		0.94		0.96		0.84		0.98		0.95	

Data File : D0706148

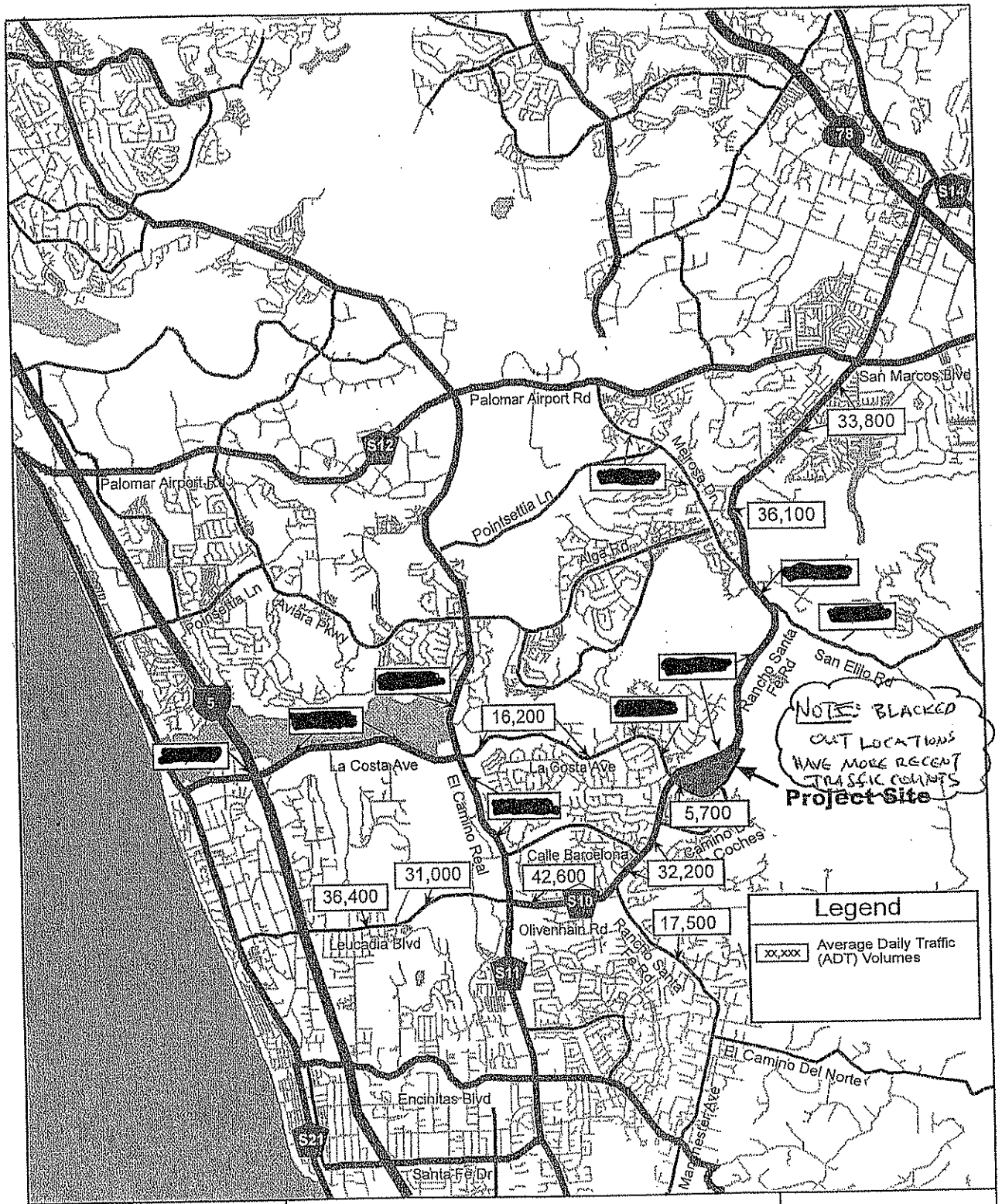

WILLDAN
Serving Public Agencies

[redacted]
Existing
Roadway Segment ADT Volumes

La Costa Town Square
Transportation Impact Study

Transportation Studies, Inc.
1350 Reynolds Avenue, Ste 115
Irvine, CA. 92614

Location : PASEO LUPINO
Segment : N/O RANCHO SANTA FE ROAD
Client : URBAN SYSTEMS

Site: CARLSBAD
Date: 12/20/06
Day: Wednesday

Interval	NB				SB				Combined			
Begin	AM		PM		AM		PM		AM		PM	
12:00	0	1	5	14	0	1	5	18	0	2	10	32
12:15	0		3		0		5		0		8	
12:30	1		3		1		1		2		4	
12:45	0		3		0		7		0		10	
01:00	0	0	7	24	0	0	7	25	0	0	14	49
01:15	0		5		0		5		0		10	
01:30	0		4		0		5		0		9	
01:45	0		8		0		8		0		16	
02:00	1	2	6	39	2	2	11	42	3	4	17	81
02:15	0		1		0		12		0		13	
02:30	1		20		0		12		1		32	
02:45	0		12		0		7		0		19	
03:00	0	0	6	39	0	1	7	31	0	1	13	70
03:15	0		12		0		10		0		22	
03:30	0		9		1		11		1		20	
03:45	0		12		0		3		0		15	
04:00	0	0	5	29	0	2	5	25	0	2	10	54
04:15	0		5		1		7		1		12	
04:30	0		10		1		8		1		18	
04:45	0		9		0		5		0		14	
05:00	1	1	7	28	0	5	6	22	1	6	13	50
05:15	0		4		0		8		0		12	
05:30	0		10		4		4		4		14	
05:45	0		7		1		4		1		11	
06:00	1	14	5	30	4	30	4	19	5	44	9	49
06:15	2		8		5		3		7		11	
06:30	7		8		8		8		15		16	
06:45	4		9		13		4		17		13	
07:00	8	31	12	32	6	59	6	14	14	90	18	46
07:15	3		1		14		2		17		3	
07:30	8		11		17		1		25		12	
07:45	12		8		22		5		34		13	
08:00	11	24	10	26	16	48	4	16	27	72	14	42
08:15	7		3		16		4		23		7	
08:30	3		5		10		3		13		8	
08:45	3		8		6		5		9		13	
09:00	4	24	8	18	13	46	1	2	17	70	9	20
09:15	8		5		14		1		22		6	
09:30	6		2		14		0		20		2	
09:45	6		3		5		0		11		3	
10:00	6	21	2	6	4	30	2	8	10	51	4	14
10:15	8		2		5		3		13		5	
10:30	2		0		9		2		11		2	
10:45	5		2		12		1		17		3	
11:00	4	20	1	4	7	30	1	2	11	50	2	6
11:15	3		1		6		0		9		1	
11:30	8		1		10		0		18		1	
11:45	5		1		7		1		12		2	
Totals	138		289		254		224		392		513	
Split%	35.2		56.3		64.8		43.7					

Day Totals	427		478		905	
Day Splits	47.2		52.8			
Peak Hour	07:30	02:30	07:30	01:45	07:30	02:30
Volume	38	50	71	43	109	86
Factor	0.79	0.63	0.81	0.90	0.80	0.67

Transportation Studies, Inc.

1350 Reynolds Avenue, Ste 115

Irvine, CA. 92614

Location : CALLE BARCELONA

Segment : E/O EL CAMINO REAL

Client : URBAN SYSTEMS

Site: CARLSBAD

Date: 12/20/06

Day: Wednesday

Interval	EB				WB				Combined			
Begin	AM		PM		AM		PM		AM		PM	
12:00	13	27	106	379	3	10	104	385	16	37	210	764
12:15	6		82		2		102		8		184	
12:30	5		106		1		91		6		197	
12:45	3		85		4		88		7		173	
01:00	3	14	102	488	2	5	97	393	5	19	199	881
01:15	4		123		2		99		6		222	
01:30	4		128		1		92		5		220	
01:45	3		135		0		105		3		240	
02:00	4	10	166	578	1	2	78	518	5	12	244	1,096
02:15	4		158		0		100		4		258	
02:30	1		120		1		174		2		294	
02:45	1		134		0		166		1		300	
03:00	0	2	119	579	0	1	152	530	0	3	271	1,109
03:15	0		154		0		126		0		280	
03:30	0		150		1		124		1		274	
03:45	2		156		0		128		2		284	
04:00	0	2	135	673	3	11	94	382	3	13	229	1,055
04:15	0		174		1		102		1		276	
04:30	1		190		2		88		3		278	
04:45	1		174		5		98		6		272	
05:00	1	14	202	814	13	81	122	407	14	95	324	1,221
05:15	1		178		11		89		12		267	
05:30	3		228		26		100		29		328	
05:45	9		206		31		96		40		302	
06:00	13	69	174	598	33	240	68	325	46	309	242	923
06:15	18		162		52		72		70		234	
06:30	8		136		56		82		64		218	
06:45	30		126		99		103		129		229	
07:00	44	274	130	472	132	828	78	262	176	1,102	208	734
07:15	64		125		222		72		286		197	
07:30	80		117		206		64		286		181	
07:45	86		100		268		48		354		148	
08:00	62	230	90	326	258	681	46	157	320	911	136	483
08:15	56		72		143		35		199		107	
08:30	59		98		132		50		191		148	
08:45	53		66		148		26		201		92	
09:00	62	231	86	282	132	496	27	102	194	727	113	384
09:15	65		72		122		27		187		99	
09:30	56		52		116		31		172		83	
09:45	48		72		126		17		174		89	
10:00	75	275	43	138	88	332	11	51	163	607	54	189
10:15	72		42		86		12		158		54	
10:30	52		35		72		12		124		47	
10:45	76		18		86		16		162		34	
11:00	89	349	25	67	72	386	3	25	161	735	28	92
11:15	76		17		110		9		186		26	
11:30	88		19		98		9		186		28	
11:45	96		6		106		4		202		10	
Totals	1,497		5,394		3,073		3,537		4,570		8,931	
Split%	32.8		60.4		67.2		39.6					
Day Totals		6,891				6,610				13,501		
Day Splits		51.0				49.0						
Peak Hour	11:00		05:00		07:15		02:30		07:15		05:00	
Volume	349		814		954		618		1,246		1,221	
Factor	0.91		0.89		0.89		0.89		0.88		0.93	

Transportation Studies, Inc.
1350 Reynolds Avenue, Ste 115
Irvine, CA. 92614

Location : LA COSTA AVENUE
Segment : E/O CAMINO DE LOS COCHES
Client : URBAN SYSTEMS

Site: CARLSBAD
Date: 12/20/06

Day: Wednesday

Interval	EB				WB				Combined			
Begin	AM		PM		AM		PM		AM		PM	
12:00	0	3	14	49	0	0	13	48	0	3	27	97
12:15	3		12		0		9		3		21	
12:30	0		14		0		13		0		27	
12:45	0		9		0		13		0		22	
01:00	0	2	12	50	0	0	2	36	0	2	14	86
01:15	1		16		0		10		1		26	
01:30	0		12		0		10		0		22	
01:45	1		10		0		14		1		24	
02:00	0	3	12	91	0	6	18	70	0	9	30	161
02:15	2		14		2		19		4		33	
02:30	0		42		2		19		2		61	
02:45	1		23		2		14		3		37	
03:00	1	1	13	61	0	0	14	46	1	1	27	107
03:15	0		15		0		16		0		31	
03:30	0		15		0		11		0		26	
03:45	0		18		0		5		0		23	
04:00	0	1	21	61	0	4	11	47	0	5	32	108
04:15	0		14		1		9		1		23	
04:30	1		13		0		15		1		28	
04:45	0		13		3		12		3		25	
05:00	0	2	23	70	1	9	12	53	1	11	35	123
05:15	0		13		1		12		1		25	
05:30	0		19		5		7		5		26	
05:45	2		15		2		22		4		37	
06:00	3	18	14	65	8	35	10	46	11	53	24	111
06:15	1		12		6		10		7		22	
06:30	6		21		9		13		15		34	
06:45	8		18		12		13		20		31	
07:00	13	57	16	59	17	113	7	27	30	170	23	86
07:15	8		25		29		10		37		35	
07:30	12		6		35		7		47		13	
07:45	24		12		32		3		56		15	
08:00	13	43	10	39	13	68	8	21	26	111	18	60
08:15	9		6		12		7		21		13	
08:30	12		6		24		2		36		8	
08:45	9		17		19		4		28		21	
09:00	10	46	12	35	17	56	7	19	27	102	19	54
09:15	15		11		14		2		29		13	
09:30	13		4		14		6		27		10	
09:45	8		8		11		4		19		12	
10:00	11	39	6	20	14	48	3	10	25	87	9	30
10:15	12		7		8		2		20		9	
10:30	3		1		10		0		13		1	
10:45	13		6		16		5		29		11	
11:00	8	38	1	8	12	55	2	7	20	93	3	15
11:15	11		2		15		2		26		4	
11:30	12		3		18		2		30		5	
11:45	7		2		10		1		17		3	
Totals	253		608		394		430		647		1,038	
Split%	39.1		58.6		60.9		41.4					
Day Totals		861				824				1,685		
Day Splits		51.1				48.9						
Peak Hour	07:30		02:30		07:00		01:45		07:00		02:00	
Volume	58		93		113		70		170		161	
Factor	0.60		0.55		0.81		0.92		0.76		0.66	

Transportation Studies, Inc.
1350 Reynolds Avenue, Ste 115
Irvine, CA. 92614

LOCATION : CAMINO TIMITEO
SEGMENT : S/O LA COSTA AVENUE
CLIENT : URBAN SYSTEMS

Site: CARLSBAD
Date: 12/20/06

Day: Wednesday

Interval	NB				SB				Combined			
Begin	AM		PM		AM		PM		AM		PM	
12:00	2	4	12	54	3	9	8	50	5	13	20	104
12:15	2		12		2		8		4		20	
12:30	0		15		4		12		4		27	
12:45	0		15		0		22		0		37	
01:00	4	4	11	52	0	1	13	64	4	5	24	116
01:15	0		13		1		16		1		29	
01:30	0		11		0		20		0		31	
01:45	0		17		0		15		0		32	
02:00	0	0	18	66	1	3	18	62	1	3	36	128
02:15	0		18		0		11		0		29	
02:30	0		14		2		15		2		29	
02:45	0		16		0		18		0		34	
03:00	2	7	10	55	1	2	14	64	3	9	24	119
03:15	1		17		1		21		2		38	
03:30	2		11		0		13		2		24	
03:45	2		17		0		16		2		33	
04:00	1	9	9	59	0	0	15	73	1	9	24	132
04:15	3		18		0		20		3		38	
04:30	0		16		0		24		0		40	
04:45	5		16		0		14		5		30	
05:00	4	24	14	76	2	4	26	115	6	28	40	191
05:15	4		20		2		27		6		47	
05:30	8		20		0		36		8		56	
05:45	8		22		0		26		8		48	
06:00	11	69	18	65	3	6	31	99	14	75	49	164
06:15	13		16		1		27		14		43	
06:30	25		10		2		22		27		32	
06:45	20		21		0		19		20		40	
07:00	20	135	8	47	3	37	19	85	23	172	27	132
07:15	31		10		10		27		41		37	
07:30	44		19		10		22		54		41	
07:45	40		10		14		17		54		27	
08:00	26	101	7	35	8	17	18	54	34	118	25	89
08:15	23		14		3		11		26		25	
08:30	30		2		2		11		32		13	
08:45	22		12		4		14		26		26	
09:00	11	65	12	31	8	43	17	50	19	108	29	81
09:15	20		6		13		14		33		20	
09:30	19		11		14		12		33		23	
09:45	15		2		8		7		23		9	
10:00	6	53	3	11	8	38	12	37	14	91	15	48
10:15	13		2		8		7		21		9	
10:30	16		3		14		14		30		17	
10:45	18		3		8		4		26		7	
11:00	15	75	4	14	16	51	9	23	31	126	13	37
11:15	25		2		11		4		36		6	
11:30	17		4		14		4		31		8	
11:45	18		4		10		6		28		10	
Totals	546		565		211		776		757		1,341	
Split%	72.1		42.1		27.9		57.9					

Day Totals	1,111		987		2,098	
Day Splits	53.0		47.0			
Peak Hour	07:15	05:15	11:00	05:15	07:15	05:15
Volume	141	80	51	120	183	200
Factor	0.80	0.91	0.80	0.83	0.85	0.89

Transportation Studies, Inc.
1350 Reynolds Avenue, Ste 115
Irvine, CA. 92614

LOCATION : CALLE TIMITEO
SEGMENT : N/O CAMINO LOS COCHES
CLIENT : URBAN SYSTEMS

Site: CARLSBAD
Date: 12/20/06
Day: Wednesday

Interval	NB				SB				Combined			
Begin	AM		PM		AM		PM		AM		PM	
12:00	1	4	17	65	2	4	14	55	3	8	31	120
12:15	1		17		1		8		2		25	
12:30	2		15		1		18		3		33	
12:45	0		16		0		15		0		31	
01:00	2	3	15	63	0	0	14	76	2	3	29	139
01:15	0		12		0		20		0		32	
01:30	1		20		0		18		1		38	
01:45	0		16		0		24		0		40	
02:00	1	5	14	103	0	1	25	82	1	6	39	185
02:15	4		14		0		22		4		36	
02:30	0		46		0		18		0		64	
02:45	0		29		1		17		1		46	
03:00	0	3	22	78	1	1	17	80	1	4	39	158
03:15	2		16		0		20		2		36	
03:30	0		28		0		16		0		44	
03:45	1		12		0		27		1		39	
04:00	0	0	23	101	0	4	9	55	0	4	32	156
04:15	0		22		0		12		0		34	
04:30	0		30		2		16		2		46	
04:45	0		26		2		18		2		44	
05:00	0	7	26	125	3	23	15	83	3	30	41	208
05:15	2		35		5		24		7		59	
05:30	3		29		6		26		9		55	
05:45	2		35		9		18		11		53	
06:00	2	8	25	104	12	61	19	65	14	69	44	169
06:15	1		36		11		12		12		48	
06:30	2		23		14		16		16		39	
06:45	3		20		24		18		27		38	
07:00	7	51	31	72	28	180	13	39	35	231	44	111
07:15	9		17		50		16		59		33	
07:30	12		13		46		6		58		19	
07:45	23		11		56		4		79		15	
08:00	23	45	28	79	18	84	4	21	41	129	32	100
08:15	4		16		21		8		25		24	
08:30	8		18		27		4		35		22	
08:45	10		17		18		5		28		22	
09:00	5	22	7	52	12	65	9	18	17	87	16	70
09:15	4		19		15		4		19		23	
09:30	3		14		16		3		19		17	
09:45	10		12		22		2		32		14	
10:00	10	38	11	29	19	61	1	9	29	99	12	38
10:15	8		9		12		2		20		11	
10:30	8		7		14		3		22		10	
10:45	12		2		16		3		28		5	
11:00	8	46	12	25	16	67	4	11	24	113	16	36
11:15	10		4		13		2		23		6	
11:30	8		6		16		4		24		10	
11:45	20		3		22		1		42		4	
Totals	232		896		551		594		783		1,490	
Split%	29.6		60.1		70.4		39.9					

Day Totals		1,128				1,145				2,273		
Day Splits		49.6				50.4						
Peak Hour	07:15		05:00		07:00		01:30		07:15		05:15	
Volume	67		125		180		89		237		211	
Factor	0.73		0.89		0.80		0.89		0.75		0.89	

Transportation Studies, Inc.

1350 Reynolds Avenue, Ste 115

Irvine, CA. 92614

LOCATION : CAMINO DE LOS COCHES

SEGMENT : E/O RANCHO SANTA FE ROAD

CLIENT : URBAN SYSTEMS

Site: CARLSBAD

Date: 12/20/06

Day: Wednesday

Interval	EB				WB				Combined			
Begin	AM		PM		AM		PM		AM		PM	
12:00	6	12	23	130	4	9	94	335	10	21	117	465
12:15	3		37		3		72		6		109	
12:30	1		38		1		82		2		120	
12:45	2		32		1		87		3		119	
01:00	5	7	22	120	3	5	63	263	8	12	85	383
01:15	0		26		0		84		0		110	
01:30	1		38		0		55		1		93	
01:45	1		34		2		61		3		95	
02:00	1	9	55	400	1	3	72	508	2	12	127	908
02:15	5		103		1		75		6		178	
02:30	0		156		0		186		0		342	
02:45	3		86		1		175		4		261	
03:00	0	6	83	291	1	1	97	412	1	7	180	703
03:15	2		72		0		119		2		191	
03:30	0		82		0		98		0		180	
03:45	4		54		0		98		4		152	
04:00	0	2	66	263	1	8	74	331	1	10	140	594
04:15	1		49		1		82		2		131	
04:30	0		66		2		97		2		163	
04:45	1		82		4		78		5		160	
05:00	2	23	73	287	3	38	70	320	5	61	143	607
05:15	3		61		8		84		11		145	
05:30	4		73		12		96		16		169	
05:45	14		80		15		70		29		150	
06:00	8	137	76	304	26	133	50	264	34	270	126	568
06:15	42		86		22		56		64		142	
06:30	28		78		42		81		70		159	
06:45	59		64		43		77		102		141	
07:00	115	567	74	210	90	520	55	219	205	1,087	129	429
07:15	208		43		162		68		370		111	
07:30	168		38		168		60		336		98	
07:45	76		55		100		36		176		91	
08:00	60	163	50	149	46	204	70	196	106	367	120	345
08:15	27		32		47		51		74		83	
08:30	32		26		55		35		87		61	
08:45	44		41		56		40		100		81	
09:00	31	183	29	110	39	228	60	126	70	411	89	236
09:15	42		34		56		20		98		54	
09:30	58		25		53		24		111		49	
09:45	52		22		80		22		132		44	
10:00	36	125	25	51	70	233	18	48	106	358	43	99
10:15	32		12		55		12		87		24	
10:30	37		10		54		11		91		21	
10:45	20		4		54		7		74		11	
11:00	24	92	18	39	61	373	9	28	85	465	27	67
11:15	24		7		73		6		97		13	
11:30	28		7		73		8		101		15	
11:45	16		7		166		5		182		12	
Totals	1,326		2,354		1,755		3,050		3,081		5,404	
Split%	43.0		43.6		57.0		56.4					
Day Totals		3,680				4,805				8,485		
Day Splits		43.4				56.6						
Peak Hour	07:00		02:15		07:00		02:30		07:00		02:30	
Volume	567		428		520		577		1,087		974	
Factor	0.68		0.69		0.77		0.78		0.73		0.71	

Transportation Studies, Inc.
1350 Reynolds Avenue, Ste 115
Irvine, CA. 92614

Location : CAMINO DE LOS COCHES
Segment : S/O LA COSTA AVENUE
Client : URBAN SYSTEMS

Site: CARLSBAD
Date: 12/20/06
Day: Wednesday

Interval	NB				SB				Combined			
Begin	AM		PM		AM		PM		AM		PM	
12:00	1	5	33	103	3	5	25	117	4	10	58	220
12:15	4		21		1		36		5		57	
12:30	0		30		0		42		0		72	
12:45	0		19		1		14		1		33	
01:00	1	2	21	74	5	7	15	68	6	9	36	142
01:15	0		25		0		12		0		37	
01:30	0		12		1		22		1		34	
01:45	1		16		1		19		2		35	
02:00	1	3	13	298	2	7	32	187	3	10	45	485
02:15	0		19		2		42		2		61	
02:30	1		174		3		70		4		244	
02:45	1		92		0		43		1		135	
03:00	1	1	46	142	0	0	28	118	1	1	74	260
03:15	0		32		0		33		0		65	
03:30	0		28		0		29		0		57	
03:45	0		36		0		28		0		64	
04:00	1	1	38	117	0	1	26	124	1	2	64	241
04:15	0		28		0		29		0		57	
04:30	0		27		0		33		0		60	
04:45	0		24		1		36		1		60	
05:00	0	13	29	90	0	5	37	127	0	18	66	217
05:15	6		27		1		33		7		60	
05:30	1		23		3		31		4		54	
05:45	6		11		1		26		7		37	
06:00	4	34	17	92	6	60	31	136	10	94	48	228
06:15	5		28		14		26		19		54	
06:30	9		27		20		45		29		72	
06:45	16		20		20		34		36		54	
07:00	25	224	23	70	72	478	29	80	97	702	52	150
07:15	60		18		166		18		226		36	
07:30	95		17		182		18		277		35	
07:45	44		12		58		15		102		27	
08:00	26	72	17	72	17	61	19	68	43	133	36	140
08:15	12		17		15		15		27		32	
08:30	17		14		11		19		28		33	
08:45	17		24		18		15		35		39	
09:00	20	67	22	50	16	74	18	43	36	141	40	93
09:15	6		15		16		7		22		22	
09:30	18		6		18		11		36		17	
09:45	23		7		24		7		47		14	
10:00	22	71	12	27	11	61	6	26	33	132	18	53
10:15	19		4		10		6		29		10	
10:30	12		8		19		8		31		16	
10:45	18		3		21		6		39		9	
11:00	16	116	4	9	21	86	0	6	37	202	4	15
11:15	14		0		13		4		27		4	
11:30	16		2		23		2		39		4	
11:45	70		3		29		0		99		3	
Totals	609		1,144		845		1,100		1,454		2,244	
Split%	41.9		51.0		58.1		49.0					
Day Totals		1,753				1,945				3,698		
Day Splits		47.4				52.6						
Peak Hour	07:15		02:30		07:00		02:00		07:00		02:30	
Volume	225		344		478		187		702		518	
Factor	0.59		0.49		0.66		0.67		0.63		0.53	

Transportation Studies, Inc.
1350 Reynolds Avenue, Ste 115
Irvine, CA. 92614

Location : CIRCULO SEQUOIA
Segment : S/O LA COSTA AVENUE
Client : URBAN SYSTEMS

Site: CARLSBAD
Date: 12/20/06

Day: Wednesday

Interval	NB				SB				Combined			
Begin	AM		PM		AM		PM		AM		PM	
12:00	0	1	13	38	0	1	6	14	0	2	19	52
12:15	1		7		1		4		2		11	
12:30	0		7		0		3		0		10	
12:45	0		11		0		1		0		12	
01:00	0	0	6	35	0	1	0	7	0	1	6	42
01:15	0		13		1		2		1		15	
01:30	0		10		0		1		0		11	
01:45	0		6		0		4		0		10	
02:00	0	1	12	49	0	0	2	13	0	1	14	62
02:15	0		8		0		2		0		10	
02:30	0		18		0		3		0		21	
02:45	1		11		0		6		1		17	
03:00	0	0	6	19	1	2	2	20	1	2	8	39
03:15	0		6		1		5		1		11	
03:30	0		6		0		7		0		13	
03:45	0		1		0		6		0		7	
04:00	0	1	6	26	0	0	12	24	0	1	18	50
04:15	1		6		0		5		1		11	
04:30	0		7		0		3		0		10	
04:45	0		7		0		4		0		11	
05:00	0	4	3	22	0	1	2	21	0	5	5	43
05:15	0		3		0		7		0		10	
05:30	3		5		0		8		3		13	
05:45	1		11		1		4		2		15	
06:00	2	11	4	12	0	3	4	20	2	14	8	32
06:15	2		3		1		5		3		8	
06:30	1		2		1		9		2		11	
06:45	6		3		1		2		7		5	
07:00	4	33	1	9	8	27	4	15	12	60	5	24
07:15	9		3		5		2		14		5	
07:30	8		2		6		4		14		6	
07:45	12		3		8		5		20		8	
08:00	6	30	1	7	2	11	3	12	8	41	4	19
08:15	7		3		5		4		12		7	
08:30	9		1		2		1		11		2	
08:45	8		2		2		4		10		6	
09:00	5	24	3	9	4	18	4	11	9	42	7	20
09:15	5		2		8		4		13		6	
09:30	5		4		2		2		7		6	
09:45	9		0		4		1		13		1	
10:00	3	20	2	3	0	8	2	4	3	28	4	7
10:15	7		0		4		0		11		0	
10:30	5		0		0		2		5		2	
10:45	5		1		4		0		9		1	
11:00	11	35	0	2	3	9	2	4	14	44	2	6
11:15	9		2		2		1		11		3	
11:30	9		0		3		1		12		1	
11:45	6		0		1		0		7		0	
Totals	160		231		81		165		241		396	
Split%	66.4		58.3		33.6		41.7					

Day Totals		391				246				637		
Day Splits		61.4				38.6						
Peak Hour	07:15		02:00		07:00		03:15		07:00		02:00	
Volume	35		49		27		30		60		62	
Factor	0.73		0.68		0.84		0.63		0.75		0.74	

Transportation Studies, Inc.
1350 Reynolds Avenue, Ste 115
Irvine, CA. 92614

Location : CIRCULO SEQUOIA
Segment : N/O LA COSTA AVENUE
Client : URBAN SYSTEMS

Site: CARLSBAD
Date: 12/20/06

Day: Wednesday

Interval	SB				NB				Combined			
Begin	AM		PM		AM		PM		AM		PM	
12:00	0	0	6	22	0	2	5	22	0	2	11	44
12:15	0		2		2		8		2		10	
12:30	0		11		0		4		0		15	
12:45	0		3		0		5		0		8	
01:00	0	0	2	16	0	1	7	26	0	1	9	42
01:15	0		6		0		7		0		13	
01:30	0		2		0		7		0		9	
01:45	0		6		1		5		1		11	
02:00	0	0	12	26	0	0	4	48	0	0	16	74
02:15	0		9		0		4		0		13	
02:30	0		4		0		26		0		30	
02:45	0		1		0		14		0		15	
03:00	0	0	2	12	1	1	8	30	1	1	10	42
03:15	0		7		0		6		0		13	
03:30	0		0		0		10		0		10	
03:45	0		3		0		6		0		9	
04:00	0	2	3	9	0	4	12	37	0	6	15	46
04:15	1		0		1		7		2		7	
04:30	0		3		1		9		1		12	
04:45	1		3		2		9		3		12	
05:00	1	1	2	14	0	3	17	37	1	4	19	51
05:15	0		1		0		6		0		7	
05:30	0		1		1		5		1		6	
05:45	0		10		2		9		2		19	
06:00	2	9	4	19	1	9	6	40	3	18	10	59
06:15	3		7		1		9		4		16	
06:30	3		4		2		11		5		15	
06:45	1		4		5		14		6		18	
07:00	7	52	2	11	6	38	8	31	13	90	10	42
07:15	11		6		8		14		19		20	
07:30	16		1		8		4		24		5	
07:45	18		2		16		5		34		7	
08:00	9	31	5	8	7	23	6	16	16	54	11	24
08:15	8		2		4		2		12		4	
08:30	8		0		6		1		14		1	
08:45	6		1		6		7		12		8	
09:00	7	23	2	2	4	21	8	17	11	44	10	19
09:15	6		0		4		3		10		3	
09:30	4		0		10		4		14		4	
09:45	6		0		3		2		9		2	
10:00	3	14	2	4	4	17	3	10	7	31	5	14
10:15	0		0		4		4		4		4	
10:30	4		1		2		0		6		1	
10:45	7		1		7		3		14		4	
11:00	8	29	1	2	8	25	1	4	16	54	2	6
11:15	7		0		7		0		14		0	
11:30	7		1		4		1		11		2	
11:45	7		0		6		2		13		2	
Totals	161		145		144		318		305		463	
Split%	52.8		31.3		47.2		68.7					

Day Totals	306		462		768	
Day Splits	39.8		60.2			
Peak Hour	07:15	01:45	07:15	02:30	07:15	02:00
Volume	54	31	39	54	93	74
Factor	0.75	0.65	0.61	0.52	0.68	0.62

INTERSECTION #39

LA COSTA AVENUE / CAMINO DE LOS COCHES

Traffic Signal Warrants Worksheets:

- Existing Conditions
- Existing Plus Project Conditions
- 18 pages included

URBAN SYSTEMS ASSOCIATES, INC.
4540 Kearny Villa Road, Suite 106
SAN DIEGO, CALIFORNIA 92123

JOB: LA COSTA AVE / CAMINO DE LOS COCHES
SHEET NO. ____ OF ____
CALCULATED BY: SK DATE: 10/31/07
CHECKED BY ____ DATE ____
SCALE ____

TRAFFIC SIGNAL WARRANTS SUMMARY / INTERSECTION #39

WARRANT:	EXISTING	EXISTING + PROJECT
#1 - EIGHT HOUR VEHICLE VOLUME	NO	YES
#2 - FOUR HOUR VEHICLE VOLUME	NO	YES
#3 - PEAK HOUR	YES	YES
#4 - PEDESTRIAN VOLUME	NO	NO
#5 - SCHOOL CROSSING	NO	NO.
#6 - COORDINATED SIGNAL SYSTEM	NO	YES (WITH OTHER FUTURE SIGNALS AT PROJECT DWYS)
#7 - CRASH EXPERIENCE WARRANT	CITY OF CARLSBAD	CITY OF CARLSBAD
#8 - ROADWAY NETWORK	NO	NO

SUMMARY:

THE INTERSECTION CURRENTLY MEETS A MINIMUM WARRANT FOR SIGNALIZATION. WITH PROJECT TRAFFIC ADDED, OTHER WARRANTS WILL BE SATISFIED, THEREFORE A TRAFFIC SIGNAL INSTALLATION IS RECOMMENDED AT PROJECT COMPLETION.

ATTACHMENTS: EXISTING WARRANTS WORKSHEETS - 6 PAGES
EXISTING PLUS PROJECT WARRANTS WORKSHEETS - 6 PAGES
VOLUME WORKSHEETS (VOL) - 5 PAGES

1/13
18 PAGES TOTAL

EXISTING 1/6

Figure 4C-101 (CA). Traffic Signal Warrants Worksheet (Sheet 1 of 4)

COUNT DATE EXISTING 12/20/06
CALC _____ DATE _____
CHK _____ DATE _____

DIST ____ CO ____ RTE ____ PM ____

Major St: LA COSTA AVE. (45 MPH POSTED) Critical Approach Speed 47* mph
Minor St: CAMINO DE LOS COCHES (40 MPH POSTED) Critical Approach Speed 39* mph

*85TH PERCENTILE SPEED – CITY OF CARLSBAD SPEED SURVEYS ON FILE

Speed limit or critical speed on major street traffic > 64 km/h (40 mph)..... ☒ or
In built up area of isolated community of < 10,000 population..... ☐

RURAL (R)
URBAN (U)

WARRANT 1 - Eight Hour Vehicular Volume SATISFIED YES ☐ NO ☒
(Condition A or Condition B or combination of A and B must be satisfied)

Condition A - Minimum Vehicle Volume 100% SATISFIED YES ☐ NO ☒
80% SATISFIED YES ☐ NO ☒

	MINIMUM REQUIREMENTS (80% SHOWN IN BRACKETS)														
	U	R	U	R	7-8 A	9-10 A	12-1 P	2-3 P	3-4 P	4-5 P	5-6 P	6-7 P	Hour 100%	80%
APPROACH LANES	1		2 or More											
Both Approaches Major Street	500 (400)	350 (280)	600 (480)	420 (336)	648	176	214	348	225	232	253	191	(1-HRS)	2-HRS or 80%
Highest Approach Minor Street	150 (120)	105 (84)	200 (160)	140 (112)	224	67	103	298	142	117	90	92	(4-HRS)	7-HRS

Condition B - Interruption of Continuous Traffic 100% SATISFIED YES ☐ NO ☒
80% SATISFIED YES ☐ NO ☒

	MINIMUM REQUIREMENTS (80% SHOWN IN BRACKETS)														
	U	R	U	R	7-8 A	9-10 A	12-1 P	2-3 P	3-4 P	4-5 P	5-6 P	6-7 P	Hour 100%	80%
APPROACH LANES	1		2 or More											
Both Approaches Major Street	750 (600)	525 (420)	900 (720)	630 (504)	648	176	214	348	225	232	253	191	1-HRS.	1-HRS.
Highest Approach Minor Street	75 (60)	53 (42)	100 (80)	70 (56)	224	67	103	298	142	117	90	92	8-HRS.	8-HRS

Combination of Conditions A & B SATISFIED YES ☐ NO ☐

REQUIREMENT	CONDITION	✓	FULFILLED
TWO CONDITIONS SATISFIED 80%	A. MINIMUM VEHICULAR VOLUME		Yes ☐ No ☒
	AND, B. INTERRUPTION OF CONTINUOUS TRAFFIC		
AND, AN ADEQUATE TRIAL OF OTHER ALTERNATIVES THAT COULD CAUSE LESS DELAY AND INCONVENIENCE TO TRAFFIC HAS FAILED TO SOLVE THE TRAFFIC PROBLEMS			Yes ☐ No ☒

The satisfaction of a traffic signal warrant or warrants shall not in itself require the installation of a traffic control signal.

7/18

Figure 4C-101 (CA). Traffic Signal Warrants Worksheet (Sheet 2 of 4)

WARRANT 2 - Four Hour Vehicular Volume

SATISFIED* YES ☐ NO ☒

Record hourly vehicular volumes for any four hours of an average day

APPROACH LANES	One	2 or More	① 7-8A	② 2-3P	③ 4-5P	④ 5-6P Hour
Both Approaches - Major Street	X		648	348	232	253
Higher Approach - Minor Street	X		224	298	117	90

*All plotted points fall above the curves in Figure 4C-1. (URBAN AREAS)	Yes ☐ No ☐
OR, All plotted points fall above the curves in Figure 4C-2. (RURAL AREAS)	Yes ☐ No ☒

WARRANT 3 - Peak Hour
(Part A or Part B must be satisfied)

SATISFIED YES ☒ NO ☐

PART A

SATISFIED YES ☐ NO ☒

(All parts 1, 2, and 3 below must be satisfied for the same one hour, for any four consecutive 15-minute periods)

1. The total delay experienced for traffic on one minor street approach (one direction only) controlled by a STOP sign equals or exceeds four vehicle-hours for a one-lane approach, or five vehicle-hours for a two-lane approach; AND	Yes ☐ No ☒
2. The volume on the same minor street approach (one direction only) equals or exceeds 100 vph for one moving lane of traffic or 150 vph for two moving lanes; AND	Yes ☒ No ☐
3. The total entering volume serviced during the hour equals or exceeds 800 vph for intersections with four or more approaches or 650 vph for intersections with three approaches. 648 VPH + 224 = 872 VPH	Yes ☒ No ☐

PART B

SATISFIED YES ☒ NO ☐

APPROACH LANES	One	2 or More	7-8A Hour
Both Approaches - Major Street	X		648
Higher Approach - Minor Street	X		224

The plotted point falls above the curve in Figure 4C-3.	Yes ☐ No ☒
OR, The plotted point falls above the curve in Figure 4C-4.	Yes ☒ No ☐

The satisfaction of a traffic signal warrant or warrants shall not in itself require the installation of a traffic control signal.

3/18

Figure 4C-1. Warrant 2, Four-Hour Vehicular Volume N/A

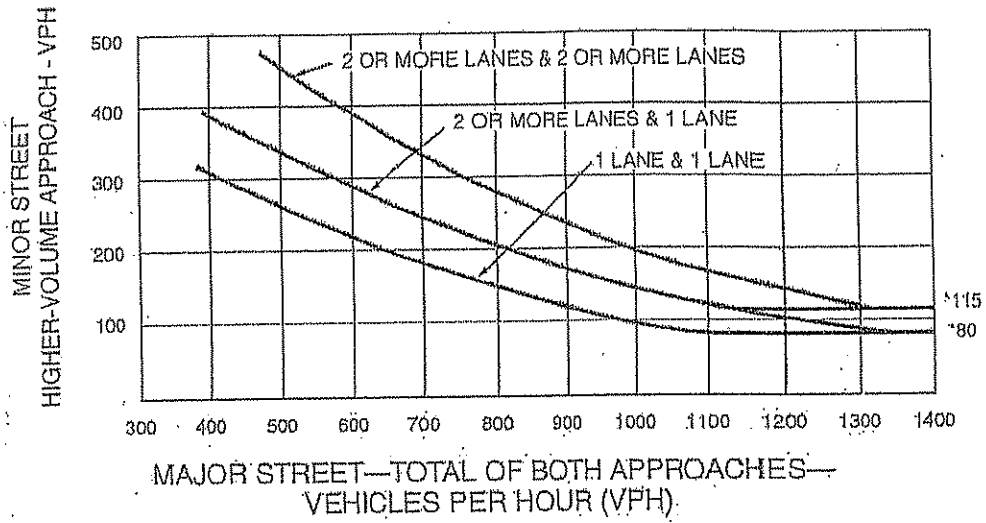

*Note: 115 vph applies as the lower threshold volume for a minor-street approach with two or more lanes and 80 vph applies as the lower threshold volume for a minor-street approach with one lane.

Figure 4C-2. Warrant 2, Four-Hour Vehicular Volume (70% Factor) EXISTING

(COMMUNITY LESS THAN 10,000 POPULATION OR ABOVE ~~70~~ 64 km/h OR ABOVE 40 mph ON MAJOR STREET)

40 MPH +

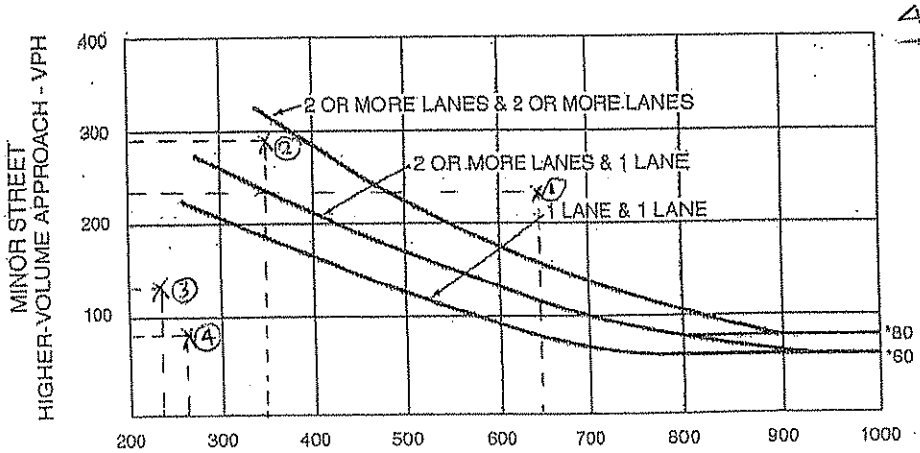

*Note: 80 vph applies as the lower threshold volume for a minor-street approach with two or more lanes and 60 vph applies as the lower threshold volume for a minor-street approach with one lane.

EXISTING 4/4

Figure 4C-3. Warrant 3, Peak Hour

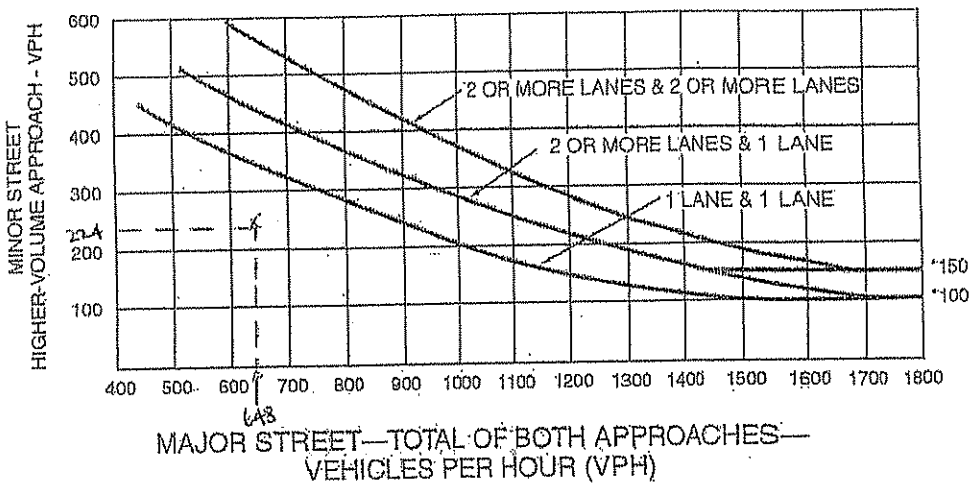

*Note: 150 vph applies as the lower threshold volume for a minor-street approach with two or more lanes and 100 vph applies as the lower threshold volume for a minor-street approach with one lane.

Figure 4C-4. Warrant 3, Peak Hour (70% Factor)

(COMMUNITY LESS THAN 10,000 POPULATION OR ABOVE ~~70~~ 64 km/h OR ABOVE 40 mph ON MAJOR STREET)

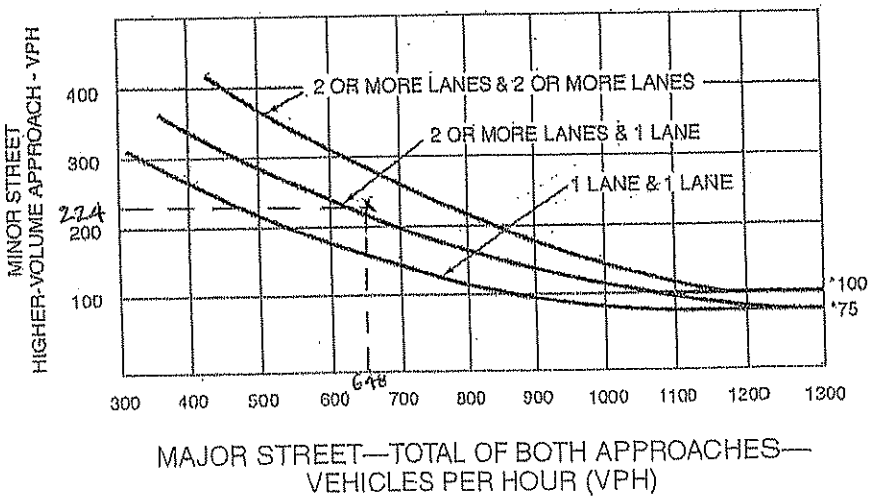

*Note: 100 vph applies as the lower threshold volume for a minor-street approach with two or more lanes and 75 vph applies as the lower threshold volume for a minor-street approach with one lane.

EXISTING 5/6

Figure 4C-101 (CA). Traffic Signal Warrants Worksheet (Sheet 3 of 4)

WARRANT 4 - Pedestrian Volume (All Parts Must Be Satisfied) — SATISFIED YES ☐ NO ☒

Part A (Parts 1 or 2 must be satisfied) — SATISFIED YES ☐ NO ☒

	Hours --- ->					
1.	Pedestrian Volume (NO PED OBSERVED CROSSING)				Any hour ≥ 190	Yes ☐ No ☒
					OR any 4 hours ≥ 100	Yes ☐ No ☒
	Adequate Crossing Gaps (2:30-3:30)				AND < 60 gap/hr	Yes ☐ No ☒

2.	Pedestrian Volume	Any hour ≥ 95	Yes ☐ No ☒
		OR Any 4 hours ≥ 50	Yes ☐ No ☒
		AND ped crossing < 1.2m/s (4 ft/sec)	Yes ☐ No ☒

Part B — SATISFIED YES ☒ NO ☐

AND, The distance to the nearest traffic signal along the major street is greater than 90 m (300 ft)	Yes ☒ No ☐
OR, The proposed traffic signal will not restrict progressive traffic flow along the major street.	Yes ☒ No ☐

WARRANT 5 - School Crossing (Parts A and B, or Part C Must Be Satisfied) — SATISFIED YES ☐ NO ☒

Part A — SATISFIED YES ☐ NO ☒

Gap/Minutes and # of Children

Gaps vs Minutes		2:30-3:30 Hour	
	Minutes Children Using Crossing	NONE	Gaps < Minutes YES ☐ NO ☒
	Number of Adequate Gaps	N/A	AND Children ≥ 20/hr YES ☐ NO ☒
School Age Pedestrians Crossing Street / hr		MINIMAL	

AND, Consideration has been given to less restrictive remedial measures.	Yes ☐ No ☐

Part B — SATISFIED YES ☒ NO ☐

The distance to the nearest traffic signal along the major street is greater than 90 m (300 ft)	Yes ☒ No ☐
OR, The proposed signal will not restrict the progressive movement of traffic.	Yes ☒ No ☐

Part C (All Parts 1, 2, and 3 below must be satisfied) — SATISFIED YES ☐ NO ☒

		U	R_y*	2:30-3:30		
1.	Vehicles/hr	500	350	346	Yes ☐	No ☒
	AND, School Age Pedestrians Crossing Street / hr	100	70	<10/HR*	Yes ☐	No ☒
	OR, School Age Pedestrians Crossing Street / day	500	350	<20/HR*	Yes ☐	No ☒

* When the critical (85th percentile approach speed exceeds 55 km/h (35 mph) or the sight distance to the intersection is less than the required stopping distance, rural criteria should be used. *ESTIMATE BASED ON ZERO CROSSINGS

2.	Other signal warrants are met.	Yes ☒ No ☐
3.	The distance to the nearest controlled crossing is greater than 180 m (600 ft).	Yes ☒ No ☐

The satisfaction of a traffic signal warrant or warrants shall not in itself require the installation of a traffic control signal.

6/18

Figure 4C-101 (CA). Traffic Signal Warrants Worksheet (Sheet 4 of 4)

WARRANT 6 - Coordinated Signal System SATISFIED YES ☐ NO ☒
(All Parts Must Be Satisfied)

MINIMUM REQUIREMENTS	DISTANCE TO NEAREST SIGNAL	
≥ 300 m (1000 ft)	N N/A ft, S 1,500 ft, E N/A ft, W 2,100 ft	Yes ☒ No ☐
On a one-way street or a street that has traffic predominantly in one direction, the adjacent traffic control signals are so far apart that they do not provide the necessary degree of vehicular platooning.		Yes ☐ No ☒
OR, On a two-way street, adjacent traffic control signals do not provide the necessary degree of platooning and the proposed and adjacent traffic control signals will collectively provide a progressive operation.		

WARRANT 7 - Crash Experience Warrant SATISFIED YES ☐ NO ☐
(All Parts Must Be Satisfied) (CITY OF CARLSBAD TO COMPLETE)

Adequate trial of alternatives with satisfactory observance and enforcement has failed to reduce the crash frequency.			Yes ☐ No ☐
REQUIREMENTS	Number of crashes within a 12 month period susceptible to correction by a traffic signal, and involving injury or damage exceeding the requirements for a reportable crash.		Yes ☐ No ☐
5 OR MORE			
REQUIREMENTS	CONDITIONS	✓	
ONE CONDITION SATISFIED 80%	Warrant 1, Condition A - Minimum Vehicular Volume		Yes ☐ No ☐
	OR, Warrant 1, Condition B - Interruption of continuous traffic		
	OR, Warrant 4, Pedestrian Volume Condition Ped Vol ≥ 152 for any hour OR, Ped Vol ≥ 80 for any 4 hours		

WARRANT 8 - Roadway Network SATISFIED YES ☐ NO ☒
(All Parts Must Be Satisfied)

MINIMUM VOLUME REQUIREMENTS	ENTERING VOLUMES - ALL APPROACHES	✓	FULFILLED
1000 Veh/Hr	During Typical Weekday Peak Hour 872 Veh/Hr and has 5-year projected traffic volumes that meet one or more of Warrants 1, 2, and 3 during an average weekday.		Yes ☐ No ☒
	OR During Each of Any 5 Hrs. of a Sat. and/or Sun _____ Veh/Hr		

CHARACTERISTICS OF MAJOR ROUTES	MAJOR ROUTE A	MAJOR ROUTE B	
Hwy. System Serving as Principal Network for Through Traffic			
Rural or Suburban Highway Outside Of, Entering, or Traversing a City			
Appears as Major Route on an Official Plan			
Any Major Route Characteristics Met, Both Streets			Yes ☐ No ☒

The satisfaction of a traffic signal warrant or warrants shall not in itself require the installation of a traffic control signal.

7/18

Figure 4C-101 (CA). Traffic Signal Warrants Worksheet (Sheet 1 of 4)

COUNT DATE _____
CALC _____ DATE 10/31/07
CHK _____ DATE _____

DIST ____ CO ____ RTE ____ PM ____

Major St: LA COSTA AVE. (45 MPH POSTED) Critical Approach Speed 47* mph
Minor St: CAMINO DE LOS COCHES (40 MPH POSTED) Critical Approach Speed 39* mph

* 85TH PERCENTILE SPEED SURVEYS ON FILE AT CITY OF CARLSBAD

Speed limit or critical speed on major street traffic > 64 km/h (40 mph)..... ☒ or
In built up area of isolated community of < 10,000 population..... ☐ } RURAL (R)
☐ URBAN (U)

WARRANT 1 - Eight Hour Vehicular Volume SATISFIED YES ☒ NO ☐
(Condition A or Condition B or combination of A and B must be satisfied)

Condition A - Minimum Vehicle Volume 100% SATISFIED YES ☒ NO ☐
80% SATISFIED YES ☐ NO ☐

	MINIMUM REQUIREMENTS (80% SHOWN IN BRACKETS)												
	U	R	U	R	7-8A	11-12A	12-1P	2-3P	3-4P	4-5P	5-6P	6-7P	Hour
APPROACH LANES	1		2 or More										
Both Approaches Major Street	500 (400)	350 (280)	600 (480)	420 (336)	768	359	394	518	405	422	511	431	8HRS.
Highest Approach Minor Street	150 (120)	105 (84)	200 (160)	140 (112)	276	226	218	427	267	242	215	217	8 HRS.

Condition B - Interruption of Continuous Traffic 100% SATISFIED YES ☐ NO ☒
80% SATISFIED YES ☐ NO ☒

	MINIMUM REQUIREMENTS (80% SHOWN IN BRACKETS)												
	U	R	U	R	7-8A	11-12A	12-1P	2-3P	3-4P	4-5P	5-6P	6-7P	Hour
APPROACH LANES	1		2 or More										
Both Approaches Major Street	750 (600)	525 (420)	900 (720)	630 (504)	768	359	394	518	405	422	511	431	1 HRS.
Highest Approach Minor Street	75 (60)	53 (42)	100 (80)	70 (56)	276	226	218	427	267	242	215	217	8 HRS.

Combination of Conditions A & B SATISFIED YES ☐ NO ☒

REQUIREMENT	CONDITION	✓	FULFILLED
TWO CONDITIONS SATISFIED 80%	A. MINIMUM VEHICULAR VOLUME		Yes ☐ No ☒
	AND, B. INTERRUPTION OF CONTINUOUS TRAFFIC		
AND, AN ADEQUATE TRIAL OF OTHER ALTERNATIVES THAT COULD CAUSE LESS DELAY AND INCONVENIENCE TO TRAFFIC HAS FAILED TO SOLVE THE TRAFFIC PROBLEMS			Yes ☐ No ☒

The satisfaction of a traffic signal warrant or warrants shall not in itself require the installation of a traffic control signal.

Figure 4C-101 (CA). Traffic Signal Warrants Worksheet (Sheet 2 of 4)

WARRANT 2 - Four Hour Vehicular Volume SATISFIED* YES ☒ NO ☐

Record hourly vehicular volumes for any four hours of an average day.

APPROACH LANES	One	2 or More	7-8A	3-4P	5-6P	6P Hour
Both Approaches - Major Street	X		768	518	511	421
Higher Approach - Minor Street	X		276	[illegible]	215	217

*All plotted points fall above the curves in Figure 4C-1. (URBAN AREAS)	Yes ☐ No ☐
OR, All plotted points fall above the curves in Figure 4C-2. (RURAL AREAS)	Yes ☒ No ☐

WARRANT 3 - Peak Hour SATISFIED YES ☒ NO ☐
(Part A or Part B must be satisfied)

PART A SATISFIED YES ☐ NO ☒

(All parts 1, 2, and 3 below must be satisfied for the same one hour, for any four consecutive 15-minute periods) (3-4P) = 926 VPH TOTAL

1. The total delay experienced for traffic on one minor street approach (one direction only) controlled by a STOP sign equals or exceeds four vehicle-hours for a one-lane approach, or five vehicle-hours for a two-lane approach; AND (30 SEC. /VEH. AVE)	Yes ☐ No ☒
2. The volume on the same minor street approach (one direction only) equals or exceeds 100 vph for one moving lane of traffic or 150 vph for two moving lanes; AND	Yes ☒ No ☐
3. The total entering volume serviced during the hour equals or exceeds 800 vph for intersections with four or more approaches or 650 vph for intersections with three approaches.	Yes ☒ No ☐

PART B SATISFIED YES ☒ NO ☐

APPROACH LANES	One	2 or More	7-8A Hour
Both Approaches - Major Street	X		768
Higher Approach - Minor Street	X		276

The plotted point falls above the curve in Figure 4C-3.	Yes ☐ No ☒
OR, The plotted point falls above the curve in Figure 4C-4.	Yes ☒ No ☐

The satisfaction of a traffic signal warrant or warrants shall not in itself require the installation of a traffic control signal.

N/A *Figure 4C-1. Warrant 2, Four-Hour Vehicular Volume*

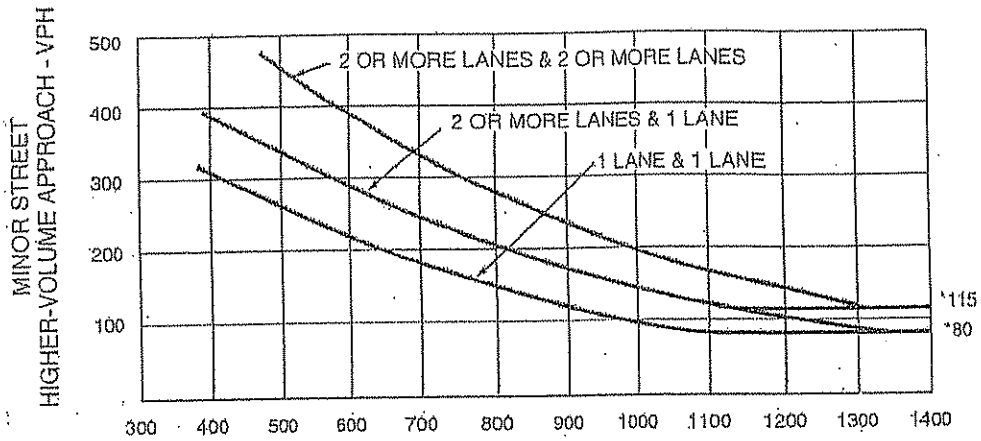

*Note: 115 vph applies as the lower threshold volume for a minor-street approach with two or more lanes and 80 vph applies as the lower threshold volume for a minor-street approach with one lane.

RURAL *Figure 4C-2. Warrant 2, Four-Hour Vehicular Volume (70% Factor)*

(COMMUNITY LESS THAN 10,000 POPULATION OR ABOVE ~~70~~ 64 km/h OR ABOVE 40 mph ON MAJOR STREET)

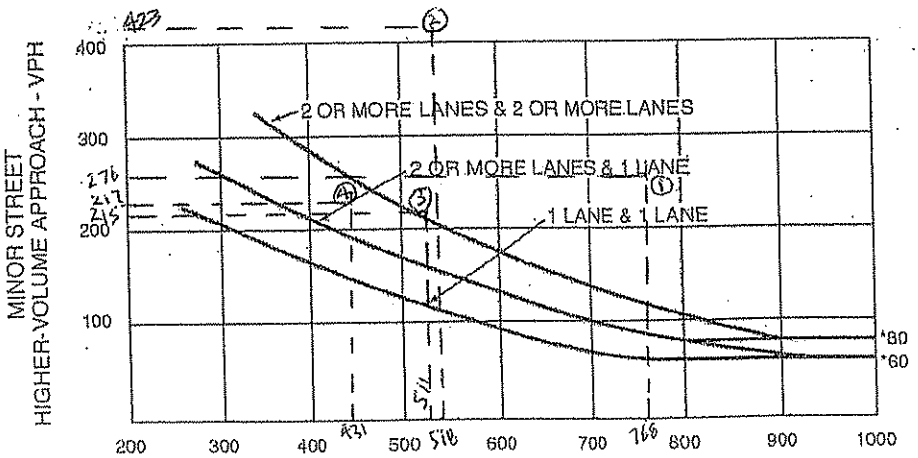

*Note: 80 vph applies as the lower threshold volume for a minor-street approach with two or more lanes and 60 vph applies as the lower threshold volume for a minor-street approach with one lane.

Figure 4C-3. Warrant 3, Peak Hour

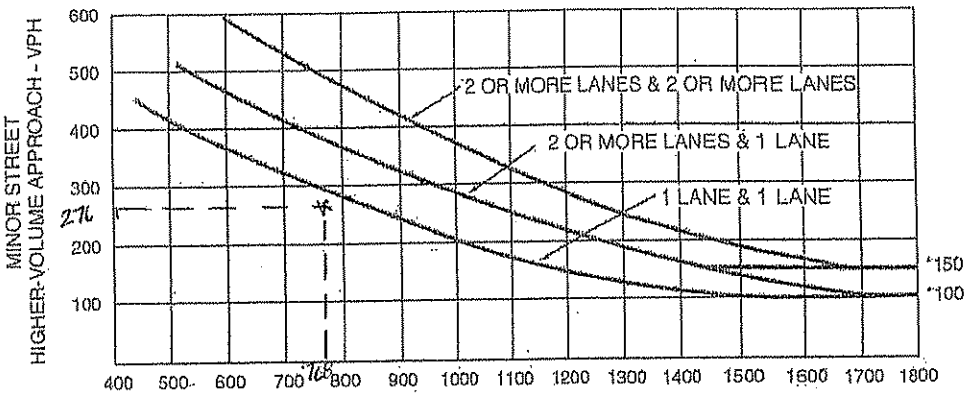

MAJOR STREET—TOTAL OF BOTH APPROACHES—
VEHICLES PER HOUR (VPH)

*Note: 150 vph applies as the lower threshold volume for a minor-street approach with two or more lanes and 100 vph applies as the lower threshold volume for a minor-street approach with one lane.

Figure 4C-4. Warrant 3, Peak Hour (70% Factor)

(COMMUNITY LESS THAN 10,000 POPULATION OR ABOVE ~~70~~ 64 km/h OR ABOVE 40 mph ON MAJOR STREET)

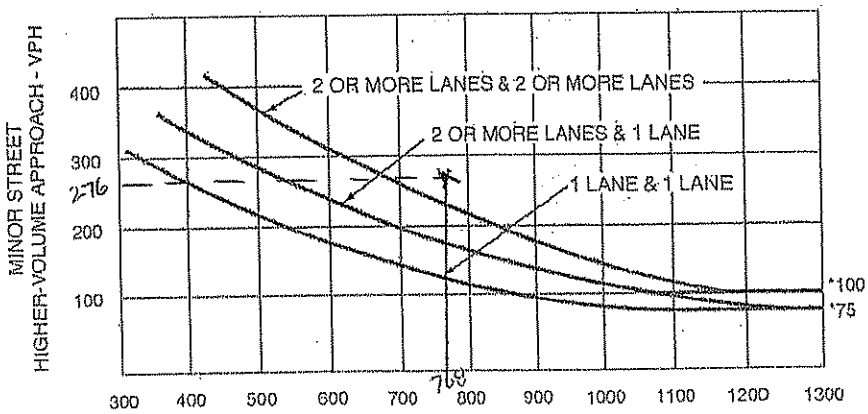

MAJOR STREET—TOTAL OF BOTH APPROACHES—
VEHICLES PER HOUR (VPH)

*Note: 100 vph applies as the lower threshold volume for a minor-street approach with two or more lanes and 75 vph applies as the lower threshold volume for a minor-street approach with one lane.

E+P 5/6

Figure 4C-101 (CA). Traffic Signal Warrants Worksheet (Sheet 3 of 4)

WARRANT 4 - Pedestrian Volume
(All Parts Must Be Satisfied) — SATISFIED YES ☐ NO ☒

Part A (Parts 1 or 2 must be satisfied) — SATISFIED YES ☐ NO ☒

NOTE: FEW EXISTING PEDS OBSERVED; FUTURE PEDS ALSO WILL BE MINIMAL.

	Hours --->						
1.	Pedestrian Volume					Any hour ≥ 190	Yes ☐ No ☒
						OR any 4 hours ≥ 100	Yes ☐ No ☒
	Adequate Crossing Gaps					AND < 60 gap/hr	Yes ☒ No ☐

2.	Pedestrian Volume	Any hour ≥ 95	Yes ☐	No ☒
		OR Any 4 hours ≥ 50	Yes ☐	No ☒
		AND ped crossing < 1.2m/s (4 ft/sec)	Yes ☐	No ☒

Part B — SATISFIED YES ☒ NO ☐

AND, The distance to the nearest traffic signal along the major street is greater than 90 m (300 ft) (CALLE TIMITEO FUTURE SIGNAL) 750'	Yes ☒	No ☐
OR, The proposed traffic signal will not restrict progressive traffic flow along the major street.	Yes ☒	No ☐

WARRANT 5 - School Crossing
(Parts A and B, or Part C Must Be Satisfied) — SATISFIED YES ☐ NO ☒

Part A — SATISFIED YES ☐ NO ☒

Gap/Minutes and # of Children

SEE NOTE ABOVE, FEW SCHOOL PEDS.

		Hour		
Gaps vs Minutes	Minutes Children Using Crossing		Gaps < Minutes	YES ☐ NO ☒
	Number of Adequate Gaps		AND Children > 20/hr	YES ☐ NO ☒
School Age Pedestrians Crossing Street / hr				

AND, Consideration has been given to less restrictive remedial measures.	Yes ☐	No ☒

Part B — SATISFIED YES ☒ NO ☐

The distance to the nearest traffic signal along the major street is greater than 90 m (300 ft)	Yes ☒	No ☐
OR, The proposed signal will not restrict the progressive movement of traffic.	Yes ☒	No ☐

Part C (All Parts 1, 2, and 3 below must be satisfied) — SATISFIED YES ☐ NO ☒

SEE NOTE ABOVE, FEW SCHOOL PEDS.

		U	R_y*				
1.	Vehicles/hr	500	350			Yes ☒	No ☐
	AND, School Age Pedestrians Crossing Street / hr	100	70			Yes ☐	No ☒
	OR, School Age Pedestrians Crossing Street / day	500	350			Yes ☐	No ☒

* When the critical (85th percentile approach speed exceeds 55 km/h (35 mph) or the sight distance to the intersection is less than the required stopping distance, rural criteria should be used.

2.	Other signal warrants are met.	Yes ☒	No ☐
3.	The distance to the nearest controlled crossing is greater than 180 m (600 ft).	Yes ☒	No ☐

The satisfaction of a traffic signal warrant or warrants shall not in itself require the installation of a traffic control signal.

12/18

Figure 4C-101 (CA). Traffic Signal Warrants Worksheet (Sheet 4 of 4)

WARRANT 6 - Coordinated Signal System SATISFIED YES ☒ NO ☐
(All Parts Must Be Satisfied)

MINIMUM REQUIREMENTS	DISTANCE TO NEAREST SIGNAL	
≥ 300 m (1000 ft)	N N/A ft, S 1,500 ft, E N/A ft, W 750 ft	Yes ☒ No ☐
On a one-way street or a street that has traffic predominantly in one direction, the adjacent traffic control signals are so far apart that they do not provide the necessary degree of vehicular platooning.		Yes ☒ No ☐
OR, On a two-way street, adjacent traffic control signals do not provide the necessary degree of platooning and the proposed and adjacent traffic control signals will collectively provide a progressive operation.		

WARRANT 7 - Crash Experience Warrant SATISFIED YES ☐ NO ☐
(All Parts Must Be Satisfied) (CITY OF CARLSBAD TO COMPLETE)

Adequate trial of alternatives with satisfactory observance and enforcement has failed to reduce the crash frequency.			Yes ☐ No ☐
REQUIREMENTS	Number of crashes within a 12 month period susceptible to correction by a traffic signal, and involving injury or damage exceeding the requirements for a reportable crash.		Yes ☐ No ☐
5 OR MORE			
REQUIREMENTS	CONDITIONS	✓	
ONE CONDITION SATISFIED 80%	Warrant 1, Condition A - Minimum Vehicular Volume		Yes ☐ No ☐
	OR, Warrant 1, Condition B - Interruption of continuous traffic		
	OR, Warrant 4, Pedestrian Volume Condition Ped Vol ≥ 152 for any hour OR, Ped Vol ≥ 80 for any 4 hours		

WARRANT 8 - Roadway Network SATISFIED YES ☐ NO ☒
(All Parts Must Be Satisfied)

MINIMUM VOLUME REQUIREMENTS	ENTERING VOLUMES - ALL APPROACHES	✓	FULFILLED
1000 Veh/Hr	During Typical Weekday Peak Hour 1,044 Veh/Hr and has 5-year projected traffic volumes that meet one or more of Warrants 1, 2, and 3 during an average weekday.		Yes ☒ No ☐
	OR During Each of Any 5 Hrs. of a Sat. and/or Sun _____ Veh/Hr		

CHARACTERISTICS OF MAJOR ROUTES	MAJOR ROUTE A	MAJOR ROUTE B	
Hwy. System Serving as Principal Network for Through Traffic			
Rural or Suburban Highway Outside Of, Entering, or Traversing a City			
Appears as Major Route on an Official Plan			
Any Major Route Characteristics Met, Both Streets			Yes ☐ No ☒

The satisfaction of a traffic signal warrant or warrants shall not in itself require the installation of a traffic control signal.

VOL - 17

URBAN SYSTEMS ASSOCIATES, INC.
4540 Kearny Villa Road, Suite 106
SAN DIEGO, CALIFORNIA 92123

JOB LA COSTA AVE / CAMINO DE LOS COCHES

SHEET NO. VOL. 1 OF

CALCULATED BY DATE

CHECKED BY DATE

SCALE

TIME	6-7A	7-8A	8-9A	9-10A	10-11A	11-12A	12-1P	1-2P	2-3P	3-4P	4-5P	5-6P	6-7P
VOL	113	648	172	176	148	179	214	154	348	225	232	253	191

TOTAL OF EASTBOUND & WESTBOUND

6-7A	7-8A	8-9A	9-10A	10-11A	11-12A	12-1P	1-2P	2-3P	3-4P	4-5P	5-6P	6-7P
35	113	68	56	48	55	48	36	70	46	47	53	46

WESTBOUND

SEE COUNT SHEET (B) WB

LA COSTA AVE.

STOP

CAMINO DE LOS COCHES

EASTBOUND

TIME	6-7A	7-8A	8-9A	9-10A	10-11A	11-12A	12-1P	1-2P	2-3P	3-4P	4-5P	5-6P	6-7P
VOL	78	535	104	120	100	124	166	118	278	179	185	200	145

ADD (A) SB + (B) EB

NORTHBOUND

6-7A	7-8A	8-9A	9-10A	10-11A	11-12A	12-1P	1-2P	2-3P	3-4P	4-5P	5-6P	6-7P
34	224	72	67	71	118	103	74	298	142	117	90	92

SEE COUNT SHEET (A) NB

EXISTING HOURLY APPROACH VOLUMES 12-20-06

NOTE: SEE ATTACHED HOURLY TRAFFIC COUNT SUMMARIES (A) & (B)

4/18

URBAN SYSTEMS ASSOCIATES, INC.
4540 Kearny Villa Road, Suite 106
SAN DIEGO, CALIFORNIA 92123

JOB
SHEET NO. VOL-2 OF
CALCULATED BY DATE
CHECKED BY DATE
SCALE

	6-7A	7-8A	8-9A	9-10A	10-11A	11-12A	12-1P	1-2P	2-3P	3-4P	4-5P	5-6P	6-7P
TOTAL OF EASTBOUND & WESTBOUND													
WESTBOUND	30	50	30	30	30	30	30	30	30	40	50	60	50

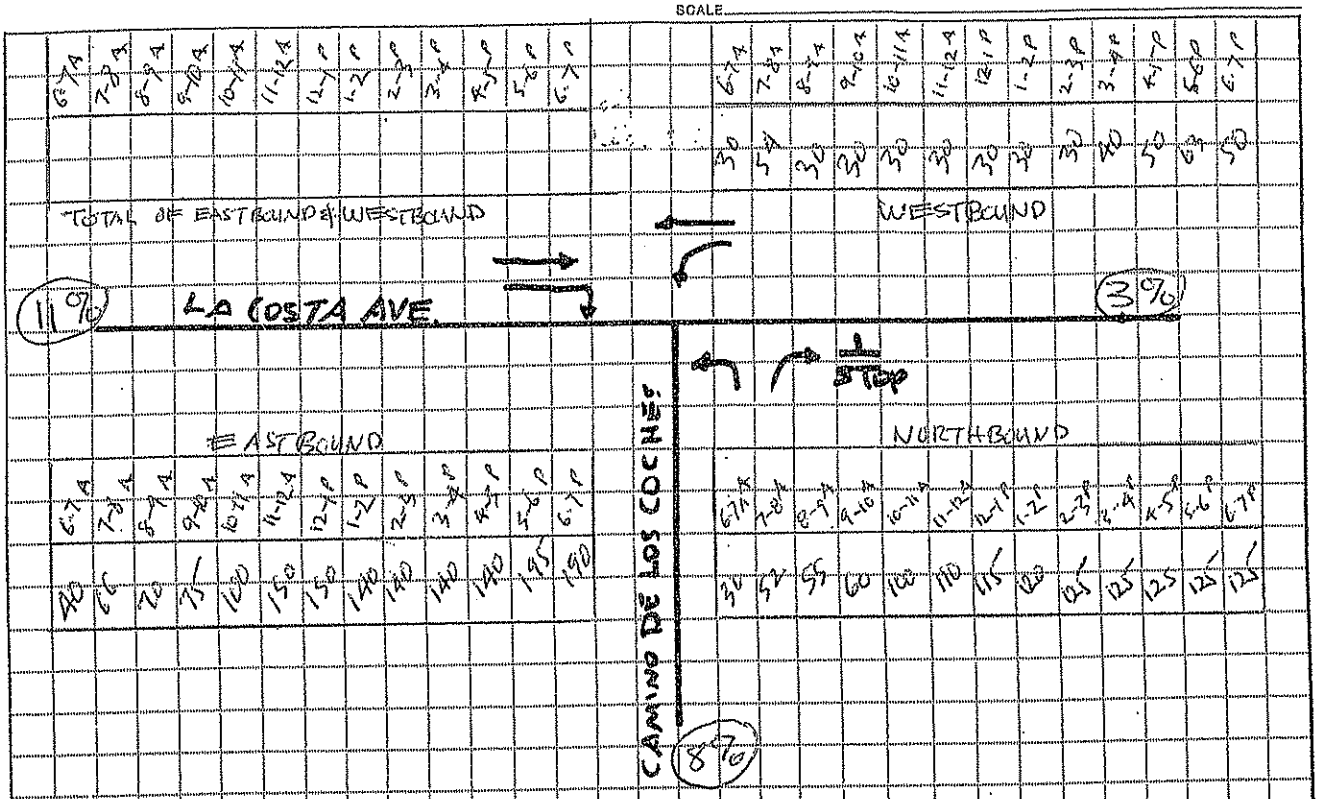

EASTBOUND	6-7A	7-8A	8-9A	9-10A	10-11A	11-12A	12-1P	1-2P	2-3P	3-4P	4-5P	5-6P	6-7P
	40	60	70	75	100	150	150	140	140	140	140	145	140

NORTHBOUND	6-7A	7-8A	8-9A	9-10A	10-11A	11-12A	12-1P	1-2P	2-3P	3-4P	4-5P	5-6P	6-7P
	30	50	55	60	100	110	115	100	125	125	125	125	125

PROJECT ONLY HOURLY APPROACH VOLUMES

(1) CALCULATE APPROACH ADT

EB LA COSTA AVE = 11% X 30,423 ADT ÷ 2 = 1673 EB ADT
WB LA COSTA AVE = 3% X 30,423 ADT ÷ 2 = 456 ADT
NB CDLC = 8% X 30,423 ADT ÷ 2 = 1217 ADT

(2) ASSIGN PEAK HOURS, FROM FIGURE 4-5, INTERSECTION #39 (SEE PAGE 4-11 OF REPORT)

(3) DISTRIBUTE APPROACH ADT MINUS PEAK HOURS (NOTE THE NON-PEAK ASSIGNMENT TO EACH HOUR IS AN ESTIMATE; SOME TRAFFIC IS ALSO EXPECTED BEFORE 6 AM AND AFTER 7 PM SO THE 13 HOURS SHOWN FOR EACH APPROACH WILL NOT ADD TO THE APPROACH ADT VOLUME.)

VOL 3/5

URBAN SYSTEMS ASSOCIATES, INC.
4540 Kearny Villa Road, Suite 106
SAN DIEGO, CALIFORNIA 92123

JOB
SHEET NO. VOL-3 OF
CALCULATED BY DATE
CHECKED BY DATE
SCALE

6-7A	7-8A	8-9A	9-10A	10-11A	11-12A	12-1P	1-2P	2-3P	3-4P	4-5P	5-6P	6-7P
183	168	274	238	278	359	394	324	518	405	422	311	231

TOTAL OF EASTBOUND & WESTBOUND

6-7A	7-8A	8-9A	9-10A	10-11A	11-12A	12-1P	1-2P	2-3P	3-4P	4-5P	5-6P	6-7P
65	161	98	86	78	85	78	66	100	86	97	116	96

WESTBOUND

LA COSTA AVE

CAMINO DE LOS COCHES

1 STOP

EASTBOUND

6-7A	7-8A	8-9A	9-10A	10-11A	11-12A	12-1P	1-2P	2-3P	3-4P	4-5P	5-6P	6-7P
118	101	176	195	200	274	316	258	418	314	324	343	233

NORTHBOUND

6-7A	7-8A	8-9A	9-10A	10-11A	11-12A	12-1P	1-2P	2-3P	3-4P	4-5P	5-6P	6-7P
64	276	127	127	115	216	218	194	223	267	294	215	217

EXISTING + PROJECT HOURLY APPROACH VOLUMES

NOTE: ADD (VOL-1) + (VOL-2) = (VOL-3)

16/18

Transportation Studies, Inc.
1350 Reynolds Avenue, Ste 115
Irvine, CA. 92614

Vol. 4/5

Site: CARLSBAD
Date: 12/20/06

Location : CAMINO DE LOS COCHES
Segment : S/O LA COSTA AVENUE
Client : URBAN SYSTEMS

Day: Wednesday

Interval	NB				SB				Combined			
Begin	AM		PM		AM		PM		AM		PM	
12:00	1	5	33	103	3	5	25	117	4	10	58	220
12:15	4		21		1		36		5		57	
12:30	0		30		0		42		0		72	
12:45	0		19		1		14		1		33	
01:00	1	2	21	74	5	7	15	68	6	9	36	142
01:15	0		25		0		12		0		37	
01:30	0		12		1		22		1		34	
01:45	1		16		1		19		2		35	
02:00	1	3	13	298	2	7	32	187	3	10	45	485
02:15	0		19		2		42		2		61	
02:30	1		174		3		70		4		244	
02:45	1		92		0		43		1		135	
03:00	1	1	46	142	0	0	28	118	1	1	74	260
03:15	0		32		0		33		0		65	
03:30	0		28		0		29		0		57	
03:45	0		36		0		28		0		64	
04:00	1	1	38	117	0	1	26	124	1	2	64	241
04:15	0		28		0		29		0		57	
04:30	0		27		0		33		0		60	
04:45	0		24		1		36		1		60	
05:00	0	13	29	90	0	5	37	127	0	18	66	217
05:15	6		27		1		33		7		60	
05:30	1		23		3		31		4		54	
05:45	6		11		1		26		7		37	
06:00	4	34	17	92	6	60	31	136	10	94	48	228
06:15	5		28		14		26		19		54	
06:30	9		27		20		45		29		72	
06:45	16		20		20		34		36		54	
07:00	25	224	23	70	72	478	29	80	97	702	52	150
07:15	60		18		166		18		226		36	
07:30	95		17		182		18		277		35	
07:45	44		12		58		15		102		27	
08:00	26	72	17	72	17	61	19	68	43	133	36	140
08:15	12		17		15		15		27		32	
08:30	17		14		11		19		28		33	
08:45	17		24		18		15		35		39	
09:00	20	67	22	50	16	74	18	43	36	141	40	93
09:15	6		15		16		7		22		22	
09:30	18		6		18		11		36		17	
09:45	23		7		24		7		47		14	
10:00	22	71	12	27	11	61	6	26	33	132	18	53
10:15	19		4		10		6		29		10	
10:30	12		8		19		8		31		16	
10:45	18		3		21		6		39		9	
11:00	16	116	4	9	21	86	0	6	37	202	4	15
11:15	14		0		13		4		27		4	
11:30	16		2		23		2		39		4	
11:45	70		3		29		0		99		3	
Totals	609		1,144		845		1,100		1,454		2,244	
Split%	41.9		51.0		58.1		49.0					
Day Totals		1,753				1,945				3,698		
Day Splits		47.4				52.6						
Peak Hour	07:15		02:30		07:00		02:00		07:00		02:30	
Volume	225		344		478		187		702		518	
Factor	0.59		0.49		0.66		0.67		0.63		0.53	

Data File : D0612057

17/18

Transportation Studies, Inc.
1350 Reynolds Avenue, Ste 115
Irvine, CA. 92614

B Vol. 5/5

Location : LA COSTA AVENUE
Segment : E/O CAMINO DE LOS COCHES
Client : URBAN SYSTEMS

Site: CARLSBAD
Date: 12/20/06

Day: Wednesday

Interval	EB				WB				Combined			
Begin	AM		PM		AM		PM		AM		PM	
12:00	0	3	14	49	0	0	13	48	0	3	27	97
12:15	3		12		0		9		3		21	
12:30	0		14		0		13		0		27	
12:45	0		9		0		13		0		22	
01:00	0	2	12	50	0	0	2	36	0	2	14	86
01:15	1		16		0		10		1		26	
01:30	0		12		0		10		0		22	
01:45	1		10		0		14		1		24	
02:00	0	3	12	91	0	6	18	70	0	9	30	161
02:15	2		14		2		19		4		33	
02:30	0		42		2		19		2		61	
02:45	1		23		2		14		3		37	
03:00	1	1	13	61	0	0	14	46	1	1	27	107
03:15	0		15		0		16		0		31	
03:30	0		15		0		11		0		26	
03:45	0		18		0		5		0		23	
04:00	0	1	21	61	0	4	11	47	0	5	32	108
04:15	0		14		1		9		1		23	
04:30	1		13		0		15		1		28	
04:45	0		13		3		12		3		25	
05:00	0	2	23	70	1	9	12	53	1	11	35	123
05:15	0		13		1		12		1		25	
05:30	0		19		5		7		5		26	
05:45	2		15		2		22		4		37	
06:00	3	18	14	65	8	35	10	46	11	53	24	111
06:15	1		12		6		10		7		22	
06:30	6		21		9		13		15		34	
06:45	8		18		12		13		20		31	
07:00	13	57	16	59	17	113	7	27	30	170	23	86
07:15	8		25		29		10		37		35	
07:30	12		6		35		7		47		13	
07:45	24		12		32		3		56		15	
08:00	13	43	10	39	13	68	8	21	26	111	18	60
08:15	9		6		12		7		21		13	
08:30	12		6		24		2		36		8	
08:45	9		17		19		4		28		21	
09:00	10	46	12	35	17	56	7	19	27	102	19	54
09:15	15		11		14		2		29		13	
09:30	13		4		14		6		27		10	
09:45	8		8		11		4		19		12	
10:00	11	39	6	20	14	48	3	10	25	87	9	30
10:15	12		7		8		2		20		9	
10:30	3		1		10		0		13		1	
10:45	13		6		16		5		29		11	
11:00	8	38	1	8	12	55	2	7	20	93	3	15
11:15	11		2		15		2		26		4	
11:30	12		3		18		2		30		5	
11:45	7		2		10		1		17		3	
Totals	253		608		394		430		647		1,038	
Split%	39.1		58.6		60.9		41.4					
Day Totals		861				824				1,685		
Day Splits		51.1				48.9						
Peak Hour	07:30		02:30		07:00		01:45		07:00		02:00	
Volume	58		93		113		70		170		161	
Factor	0.60		0.55		0.81		0.92		0.76		0.66	

Data File : D0612062

18/18

Existing Intersection Level of Service Summary (ICU Method)

(Intersections Within Carlsbad)

TABLE 3-4

Existing Intersection Level of Service Summary - ICU Method
Intersections Within Carlsbad

	Intersection	AM Peak Hour		PM Peak Hour	
		V/C	LOS	V/C	LOS
5	Melrose Dr. at Palomar Airport Rd. (07/11/07) C	0.82	D	0.71	C
6	Melrose Dr. at Rancho Bravado (01/12/06) P	0.32	A	0.26	A
7	Melrose Dr. at Poinsettia Ln./Paseo Corto (01/12/06) P	0.24	A	0.24	A
8	Melrose Dr. at Carillo Wy. (01/12/06) P	0.38	A	0.32	A
9	Melrose Dr. at Alga Rd. (08/09/07) C	0.53	A	0.67	B
10	Rancho Santa Fe Rd. at Melrose Dr. (06/26/07) T	0.50	A	0.53	A
11	Rancho Santa Fe Rd. at San Elijo Rd. (08/08/07) C	0.51	A	0.62	B
12	Rancho Santa Fe Rd. at Camino Junipero (12/19/06) T	0.55	A	0.53	A
13	Rancho Santa Fe Rd. at La Costa Ave. (08/08/07) C	0.63	B	0.62	B
14	Rancho Santa Fe Rd. at Camino de los Coches (07/19/06) C	0.46	A	0.50	A
15	Rancho Santa Fe Rd. at Calle Barcelona (01/10/06) C	0.65	B	0.48	A
16	Rancho Santa Fe Rd. at Olivenhain Rd. (07/12/07) C	0.65	B	0.67	B
18	El Camino Real at Aviara Pkwy. / Alga Rd. (08/09/07) C	0.75	C	0.72	C
19	El Camino Real at Costa Del Mar Rd. (01/12/06) P	0.60	A	0.64	B
20	I-5 SB Ramps at La Costa Ave. (07/17/07) C	0.56	A	0.54	A
21	I-5 NB Ramps at La Costa Ave. (07/17/07) C	0.65	B	0.65	B
22	Piraeus St. at La Costa Ave. (01/05/06) P	0.59	A	0.67	B
23	Saxony Rd. at La Costa Ave. (01/05/06) P	0.47	A	0.54	A
24	El Camino Real at La Costa Ave. (08/07/07) C	0.70	B	0.74	C
25	Viejo Castilla Wy. At La Costa Ave. (01/17/06) P	0.39	A	0.34	A
26	Romeria St. at La Costa Ave. (01/12/06) P	0.39	A	0.46	A
27	Cadencia St. at La Costa Ave. (01/12/06) P	0.46	A	0.44	A
37	Amargosa Dr. at Olivenhain Rd. (01/10/06) P	0.84	D	0.69	B
38	Calle Timiteo at La Costa Ave.① (01/10/06) P	0.34	A	0.21	A
39	Camino de los Coches at La Costa Ave. ① (01/10/06) P	0.48	A	0.26	A
42	La Costa Avenue at Project Driveway #1 ① (01/11/06) P	0.23	A	0.19	A
45	Rancho Santa Fe Rd. at Paseo Lupino (12/19/06) T	0.48	A	0.39	A
46	Rancho Santa Fe Rd. at Calle Acervo (12/19/06) T	0.85	D	0.71	C

Legend:
V/C = Volume to Capacity Ratio
LOS = Level of Service
① = Existing Stop Sign Control
(xx/yy/zz) = Traffic Count Date

Source of Traffic Counts
C = City of Carlsbad
P = Priority Engineering
T = Transportation Studies, Inc.

5-A
EXIST.

Melrose Drive at Palomar Airport Road

Lane Configuration for Intersection Capacity Utilization

Pk. Hr. Time Period : 7:30 AM to 8:30 AM			South Appr (NB)			North Appr (SB)			West Appr (EB)			East Appr (WB)		
			Left	Thru	Right	Left	Thru	Right	Left	Thru	Right	Left	Thru	Right
Lane Config-urations	Inside (left)	1	1			1			1			1		
		2	1			1			1			1		
		3		1			1			1			1	
		4		1			1			1			1	
		5		1				1		1	1		1	
		6			1			1						1
	Outside Free-flow	7												
Lane Settings			2	3	1	2	2	2	2	3	0	2	3	1
Capacity			3600	6000	1800	3600	4000	3600	3600	6000	0	3600	6000	1800
Are the North/South phases split (Y/N)?					N									
Are the East/West phases split (Y/N)?					N									
Efficiency Lost Factor			0.10											
Hourly Volume			377	342	152	31	531	1115	356	682	87	93	1852	38
Adjusted Hourly Volume			377	342	152	31	531	759	356	769	0	93	1852	38
Utilization Factor			0.10	0.06	0.08	0.01	0.13	0.21	0.10	0.13	0.00	0.03	0.31	0.02
Critical Factors			0.10					0.21	0.10				0.31	

ICU Ratio = 0.82 LOS = D

Turning Movements at Intersection of : **Melrose Drive and Palomar Airport Road**

Time : 7:30 AM
to 8:30 AM
Date : 07/11/07
Day : Wednesday
Name : Lance, Lotous

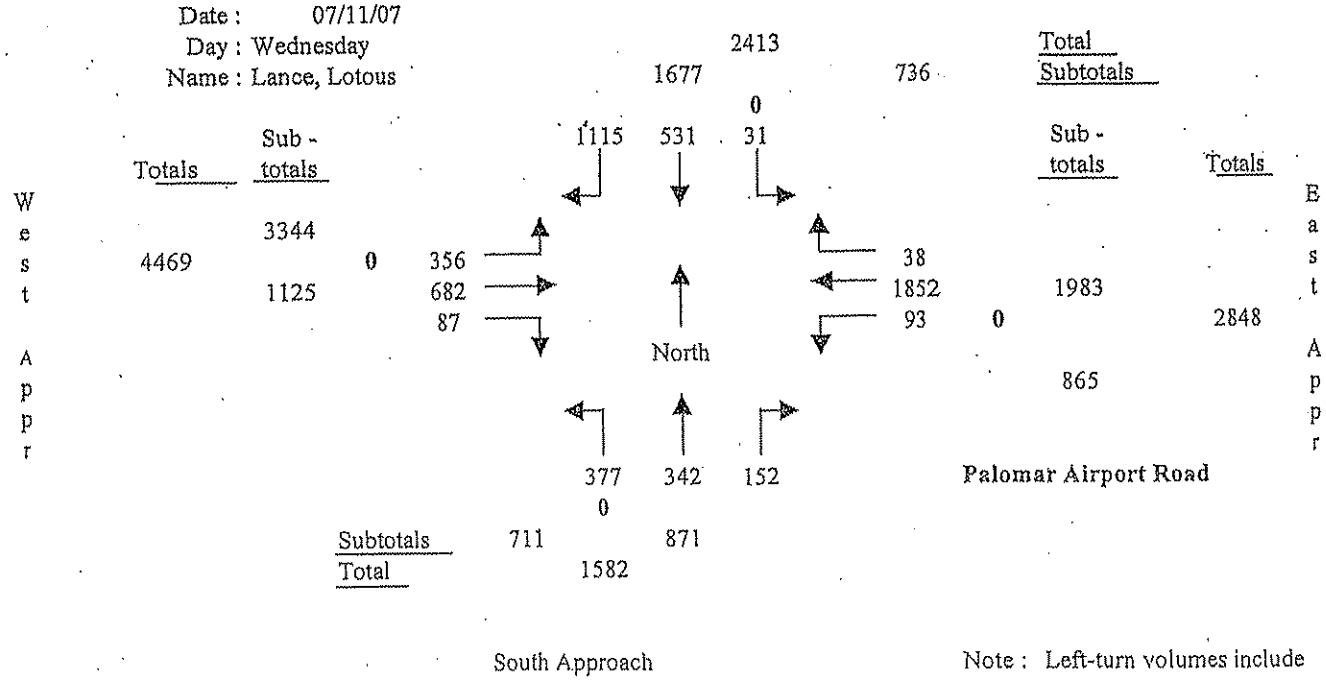

Note : Left-turn volumes include U-turns. U-turns in bold.

5-P
EXIST.

Melrose Drive at Palomar Airport Road

Lane Configuration for Intersection Capacity Utilization

Pk. Hr. Time Period : 5:00 PM to 6:00 PM		South Appr (NB)			North Appr (SB)			West Appr (EB)			East Appr (WB)		
		Left	Thru	Right	Left	Thru	Right	Left	Thru	Right	Left	Thru	Right
Lane Config - urations	Inside (left) 1	1			1			1			1		
	2	1			1			1			1		
	3		1			1			1			1	
	4		1			1			1			1	
	5		1				1		1	1		1	
	6			1			1						1
	Outside Free-flow 7												
Lane Settings		2	3	1	2	2	2	2	3	0	2	3	1
Capacity		3600	6000	1800	3600	4000	3600	3600	6000	0	3600	6000	1800
Are the North/South phases split (Y/N)?				N									
Are the East/West phases split (Y/N)?				N									
Efficiency Lost Factor		0.10											
Hourly Volume		200	521	111	53	406	409	777	1981	285	199	799	64
Adjusted Hourly Volume		200	521	111	53	406	409	777	2266	0	199	799	64
Utilization Factor		0.06	0.09	0.06	0.01	0.10	0.11	0.22	0.38	0.00	0.06	0.13	0.04
Critical Factors		0.06					0.11		0.38		0.06		

ICU Ratio = 0.71 LOS = C

Turning Movements at Intersection of : **Melrose Drive and Palomar Airport Road**

Time : 5:00 PM
to 6:00 PM
Date : 07/11/07
Day : Wednesday
Name : Lance, Lotous

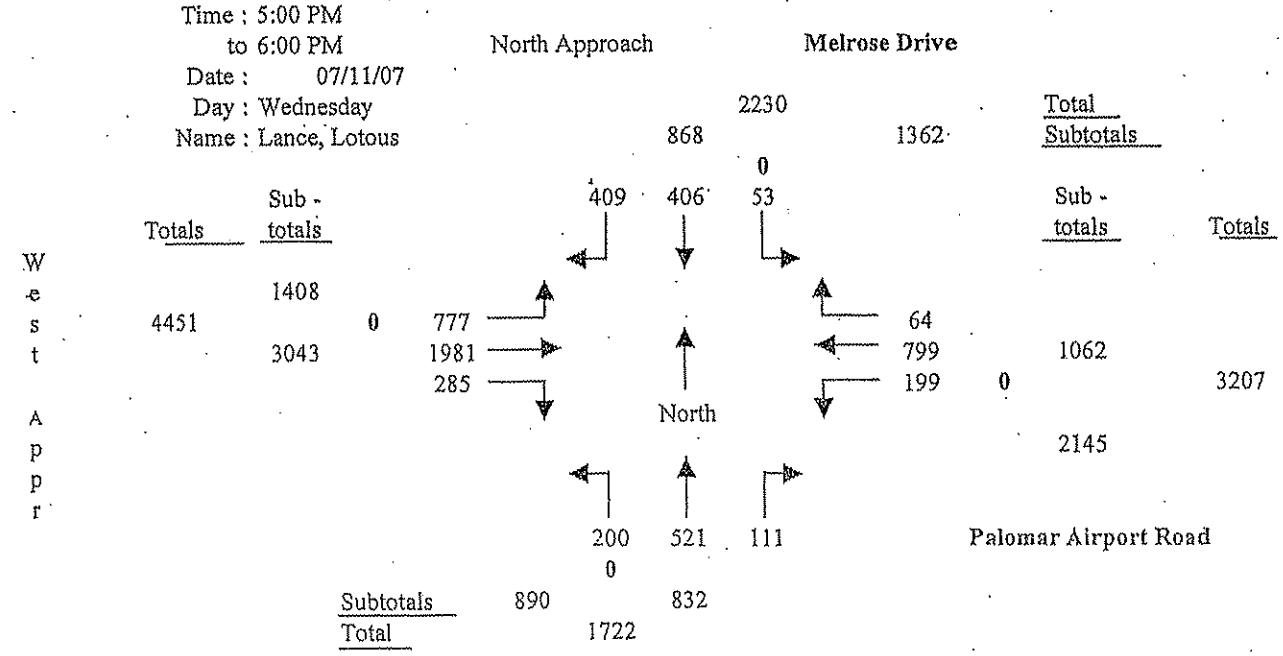

Note : Left-turn volumes include U-turns. U-turns in bold.

6 A EX

Intersection Capacity Utilization (ICU) Worksheet

INTERSECTION CAPACITY UTILIZATION

INTERSECTION: Melrose Dr (N/S) Rancho Bravado (E/W)
SCENARIO : Existing
COUNT DATE: 1/12/06 PEAK HR: AM
ANALYST : MTM AGENCY : Willdan

MOVEMENT	# OF LANES	CAPACITY	AM PEAK HOUR	UNADJUSTED VOLUME	AM PEAK V/C	
NB Left	1	1,800	3		0.00	
NB Thru+RT	3	6,000	634+60		0.12	*
NB Right	Ø	—	60		—	
SB Left	1	1,800	17		0.01	*
SB Thru +RT	3	6,000	453+5		0.08	
SB Right	Ø	—	5		—	
EB Left	1	1,800	4		0.00	
EB Thru+RT	1	2,000	7+14		0.01	*
EB Right	Ø	—	14		—	
WB Left	1	1,800	136		0.08	*
WB Thru+RT	1	2,000	2+90		0.05	
WB Right	Ø	—	90		—	
NORTH/SOUTH CRITICAL SUMS					0.13	
EAST/WEST CRITICAL SUMS					0.09	
SUM OF CRITICAL V/C RATIO					0.22	
ADJUSTMENT FOR LOST TIME					0.10	
INTERSECTION CAPACITY UTILIZATION (ICU)					0.32	
LEVEL OF SERVICE (LOS)					A	

NOTES:

LOS	Maximum V/C
A	≤0.60
B	≤0.70
C	≤0.80
D	≤0.90
E	≤1.00
F	>1.00

* Denotes Critical Movements
** Extra wide outside lane

INTERSECTION CAPACITY UTILIZATION

INTERSECTION: Melrose Dr (N/S) Rancho Bravado (E/W)
SCENARIO : Existing
COUNT DATE: 1/12/06 PEAK HR: PM
ANALYST : MTM AGENCY : Willdan

MOVEMENT	# OF LANES	CAPACITY	PM PEAK HOUR	UNADJUSTED VOLUME	PM PEAK V/C	
NB Left	1	1,800	16		0.01	*
NB Thru +RT	3	6,000	401+126		0.09	
NB Right	Ø	—	126		—	
SB Left	1	1,800	78		0.04	
SB Thru +RT	3	6,000	635+12		0.11	*
SB Right	Ø	—	12		—	
EB Left	1	1,800	3		0.00	
EB Thru +RT	1	2,000	4+7		0.01	*
EB Right	Ø	—	7		—	
WB Left	1	1,800	53		0.03	*
WB Thru+RT	1	2,000	1+46		0.02	
WB Right	Ø	—	46		—	
NORTH/SOUTH CRITICAL SUMS					0.12	
EAST/WEST CRITICAL SUMS					0.04	
SUM OF CRITICAL V/C RATIO					0.16	
ADJUSTMENT FOR LOST TIME					0.10	
INTERSECTION CAPACITY UTILIZATION (ICU)					0.26	
LEVEL OF SERVICE (LOS)					A	

NOTES:

LOS	Maximum V/C
A	≤0.60
B	≤0.70
C	≤0.80
D	≤0.90
E	≤1.00
F	>1.00

* Denotes Critical Movements
** Extra wide outside lane

6 A+P EX

PRIORITY ENGINEERING, INC.

INTERSECTION TURNING MOVEMENTS REDUCTION SHEET

ION: Melrose Dr and Rancho Bravado
Carlsbad, CA

DATE OF COUNT: Thu. 1/12/06
TIME OF COUNT: AM Peak

COUNTED BY: VR
WEATHER: Clear

TIME INTERVAL ENDING AT	FROM NORTH ON (SB) Melrose Dr				FROM SOUTH ON (NB) Melrose Dr				FROM EAST ON (WB) Rancho Bravado				FROM WEST ON (EB) Rancho Bravado				INTERVAL TOTALS
	Right	Thru	Left	Peds	Right	Thru	Left	Peds	Right	Thru	Left	Peds	Right	Thru	Left	Peds	
07:15 AM	22	1	35	0	2	0	4	0	5	100	1	0	1	134	4	0	309
07:30 AM	16	1	34	0	6	1	3	0	14	121	3	0	4	114	6	0	323
07:45 AM	24	0	46	0	6	3	4	0	13	113	3	0	0	112	7	0	331
08:00 AM	26	1	36	0	4	3	0	0	23	182	1	0	0	126	4	0	406
08:15 AM	26	1	27	0	1	2	1	0	11	165	0	0	2	100	2	0	338
08:30 AM	22	0	30	0	3	1	1	0	13	135	0	0	3	112	7	0	327
08:45 AM	16	0	43	0	6	1	2	0	13	152	2	0	0	115	4	0	354
09:00 AM	15	0	58	0	4	0	0	0	24	158	5	0	1	116	4	0	385
PEAK HOUR TOTALS	90	2	136	0	14	7	4	0	60	634	3	0	5	453	17	0	INTERSECTION
ALL MOVEMENTS	228				25				697				475				1425
PEAK HOUR FACTOR	0.90				0.69				0.85				0.91				0.88

= Pedestrians Across Intersection Leg
Peak Hour Factor

AM PEAK HOUR: 7:45 AM TO 8:45 AM

CED BY: JR

DATE OF REDUCTION: 1/14/2006

PRIORITY ENGINEERING, INC.

INTERSECTION TURNING MOVEMENTS REDUCTION SHEET

TURNING MOVEMENTS DIAGRAM
AM PEAK HOUR ENDING AT 8:45 AM

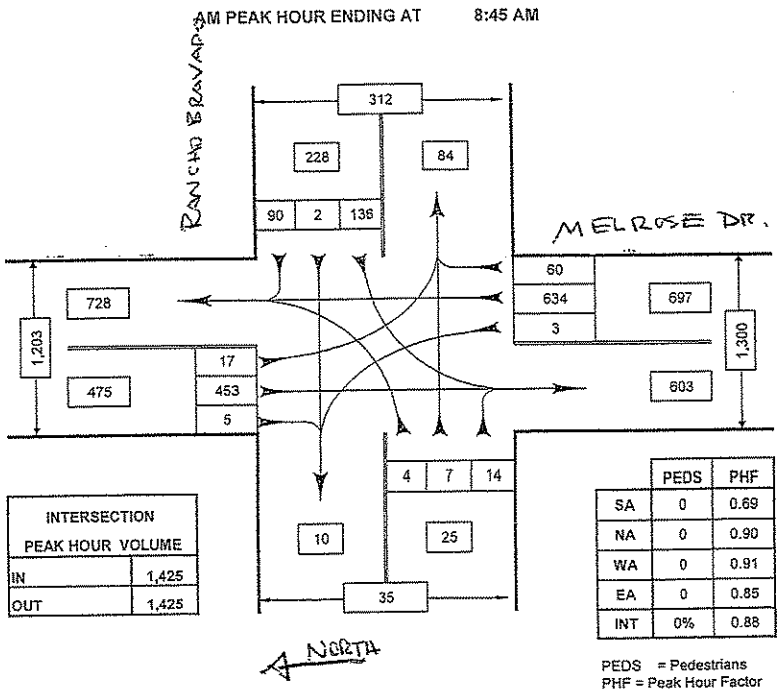

INTERSECTION PEAK HOUR VOLUME	
IN	1,425
OUT	1,425

	PEDS	PHF
SA	0	0.69
NA	0	0.90
WA	0	0.91
EA	0	0.85
INT	0%	0.88

PEDS = Pedestrians
PHF = Peak Hour Factor

Melrose Dr and Rancho Bravado

Carlsbad, CA

COUNTED BY: VR
REDUCED BY: JR
DATE: 1/14/2006

DATE OF COUNT: 1/12/06
TIME OF COUNT: AM Peak
WEATHER: Clear

PRIORITY ENGINEERING, INC.

INTERSECTION TURNING MOVEMENTS REDUCTION SHEET

ATION: Melrose Dr and Rancho Bravado
Carlsbad, CA

DATE OF COUNT: Thu. 1/12/06
TIME OF COUNT: PM Peak

COUNTED BY: VR
WEATHER: Clear

TIME INTERVAL ENDING AT	FROM NORTH ON (SB) Melrose Dr				FROM SOUTH ON (NB) Melrose Dr				FROM EAST ON (WB) Rancho Bravado				FROM WEST ON (EB) Rancho Bravado				INTERVAL TOTALS
	Right	Thru	Left	Peds	Right	Thru	Left	Peds	Right	Thru	Left	Peds	Right	Thru	Left	Peds	
04:15 PM	8	0	20	0	2	3	2	0	28	124	6	0	9	95	12	0	309
04:30 PM	5	0	14	0	1	0	1	0	23	104	3	0	2	109	13	0	275
04:45 PM	4	0	13	0	2	0	2	0	35	82	4	0	1	121	15	0	279
05:00 PM	11	1	14	0	3	0	0	0	29	94	3	0	0	167	11	0	333
05:15 PM	10	0	9	0	3	1	1	0	35	121	6	0	5	155	12	0	358
05:30 PM	11	0	17	0	0	2	0	0	32	102	2	0	3	186	21	0	356
05:45 PM	14	0	13	0	1	1	2	0	30	84	5	0	4	147	34	0	335
06:00 PM	10	0	15	0	3	0	1	0	35	59	1	0	4	132	29	0	289
PEAK HOUR TOTALS	46	1	53	0	7	4	3	0	126	401	16	0	12	535	76	0	INTERSECTION
ALL MOVEMENTS	100				14				543				725				1382
PEAK HOUR FACTOR	0.89				0.70				0.84				0.95				0.97

S = Pedestrians Across Intersection Leg
= Peak Hour Factor

PM PEAK HOUR: 4:45 PM TO 5:45 PM

UCED BY: JR

DATE OF REDUCTION: 1/14/2006

PRIORITY ENGINEERING, INC.

INTERSECTION TURNING MOVEMENTS REDUCTION SHEET

TURNING MOVEMENTS DIAGRAM

PM PEAK HOUR ENDING AT 5:45 PM

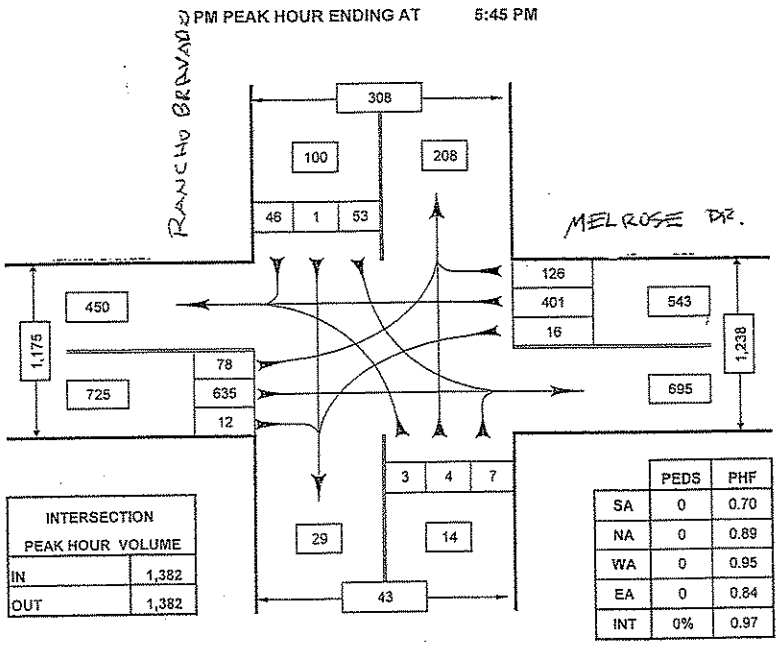

INTERSECTION PEAK HOUR VOLUME	
IN	1,382
OUT	1,382

	PEDS	PHF
SA	0	0.70
NA	0	0.89
WA	0	0.95
EA	0	0.84
INT	0%	0.97

PEDS = Pedestrians
PHF = Peak Hour Factor

Melrose Dr and Rancho Bravado

Carlsbad, CA

COUNTED BY: VR

REDUCED BY: JR

DATE: 1/14/2006

DATE OF COUNT: 1/12/06

TIME OF COUNT: PM Peak

WEATHER: Clear

Intersection Capacity Utilization (ICU) Worksheet

7 A-P EX

INTERSECTION CAPACITY UTILIZATION

INTERSECTION: Melrose Dr (N/S) Poinsettia Ln/Paseo Co (E/W)
SCENARIO : Existing
COUNT DATE: 01/12/06 PEAK HR: AM
ANALYST : MTM AGENCY : Willdan

MOVEMENT	# OF LANES	CAPACITY	AM PEAK HOUR	UNADJUSTED VOLUME	AM PEAK V/C	
NB Left	2	3,600	28		0.01	
NB Thru + RT	3	6,000	548 + 11		0.09	*
NB Right	Ø	—	11		—	
SB Left	1	1,800	17		0.01	*
SB Thru	3	6,000	508		0.08	
SB Right	1	1,800	15		0.00	
EB Left	2	3,600	49		0.01	*
EB Thru	1	2,000	0		0.00	
EB Right	1	1,800	24		0.01	
WB Left	1	1,800	29		0.02	
WB Thru + RT.	1	2,000	2 + 53		0.03	*
WB Right	Ø	—	53		—	
NORTH/SOUTH CRITICAL SUMS					0.10	
EAST/WEST CRITICAL SUMS					0.04	
SUM OF CRITICAL V/C RATIO					0.14	
ADJUSTMENT FOR LOST TIME					0.10	
INTERSECTION CAPACITY UTILIZATION (ICU)					0.24	
LEVEL OF SERVICE (LOS)					A	

NOTES:
SB-RT OVERLAP

* Denotes Critical Movements
** Extra wide outside lane

LOS	Maximum V/C
A	≤0.60
B	≤0.70
C	≤0.80
D	≤0.90
E	≤1.00
F	>1.00

INTERSECTION CAPACITY UTILIZATION

INTERSECTION: Melrose Dr (N/S) Poinsettia Ln/Paseo Co (E/W)
SCENARIO : Existing
COUNT DATE: 01/12/06 PEAK HR: PM
ANALYST : MTM AGENCY : Willdan

MOVEMENT	# OF LANES	CAPACITY	PM PEAK HOUR	UNADJUSTED VOLUME	PM PEAK V/C	
NB Left	2	3,600	18		0.01	*
NB Thru + RT	3	6,000	345 + 22		0.06	
NB Right	Ø	—	22		—	
SB Left	1	1,800	52		0.03	
SB Thru	3	6,000	594		0.10	*
SB Right	1	1,800	35	53	0.02	
EB Left	2	3,600	42		0.01	
EB Thru	1	2,000	2		0.00	
EB Right	1	1,800	36		0.02	*
WB Left	1	1,800	14		0.01	
WB Thru + RT	1	2,000	2 + 23		0.01	*
WB Right	Ø	—	23		—	
NORTH/SOUTH CRITICAL SUMS					0.11	
EAST/WEST CRITICAL SUMS					0.03	
SUM OF CRITICAL V/C RATIO					0.14	
ADJUSTMENT FOR LOST TIME					0.10	
INTERSECTION CAPACITY UTILIZATION (ICU)					0.24	
LEVEL OF SERVICE (LOS)					A	

NOTES:
SB-RT OVERLAP

* Denotes Critical Movements
** Extra wide outside lane

LOS	Maximum V/C
A	≤0.60
B	≤0.70
C	≤0.80
D	≤0.90
E	≤1.00
F	>1.00

7 A+P EX

PRIORITY ENGINEERING, INC.

INTERSECTION TURNING MOVEMENTS REDUCTION SHEET

TION: Melrose Dr and Poinsettia Ln
Carlsbad, CA

DATE OF COUNT: Thu. 1/12/06
TIME OF COUNT: AM Peak

COUNTED BY: BW
WEATHER: Clear

TIME INTERVAL ENDING AT	FROM NORTH ON (SB) Melrose Dr				FROM SOUTH ON (NB) Melrose Dr				FROM EAST ON (WB) Poinsettia Ln				FROM WEST ON (EB) Paseo Corto				INTERVAL TOTALS
	Right	Thru	Left	Peds	Right	Thru	Left	Peds	Right	Thru	Left	Peds	Right	Thru	Left	Peds	
07:15 AM	2	117	2	0	1	84	5	0	10	0	4	0	6	0	8	0	239
07:30 AM	4	151	5	0	1	118	5	0	11	2	10	0	8	0	12	0	327
07:45 AM	9	124	7	0	4	129	14	0	11	0	5	0	6	0	7	0	317
08:00 AM	14	125	2	0	4	158	4	0	21	0	7	0	7	0	16	0	358
08:15 AM	12	108	3	0	2	143	5	0	10	0	5	0	3	0	14	0	305
08:30 AM	7	99	3	0	4	137	8	0	11	0	10	0	4	0	11	0	294
08:45 AM	16	80	9	0	2	132	8	0	12	0	5	0	8	1	13	0	286
09:00 AM	13	102	7	0	3	124	6	0	9	1	4	0	6	2	15	0	292
PEAK HOUR TOTALS	39	508	17	0	11	548	28	0	53	2	29	0	24	0	49	0	INTERSECTION
ALL MOVEMENTS	564				587				84				73				1308
PEAK HOUR FACTOR	0.88				0.88				0.75				0.79				0.91

= Pedestrians Across Intersection Log
= Peak Hour Factor

AM PEAK HOUR: 7:15 AM TO 8:15 AM

JCED BY: JR

DATE OF REDUCTION: 1/15/2006

PRIORITY ENGINEERING, INC.

INTERSECTION TURNING MOVEMENTS REDUCTION SHEET

TURNING MOVEMENTS DIAGRAM
AM PEAK HOUR ENDING AT 8:15 AM

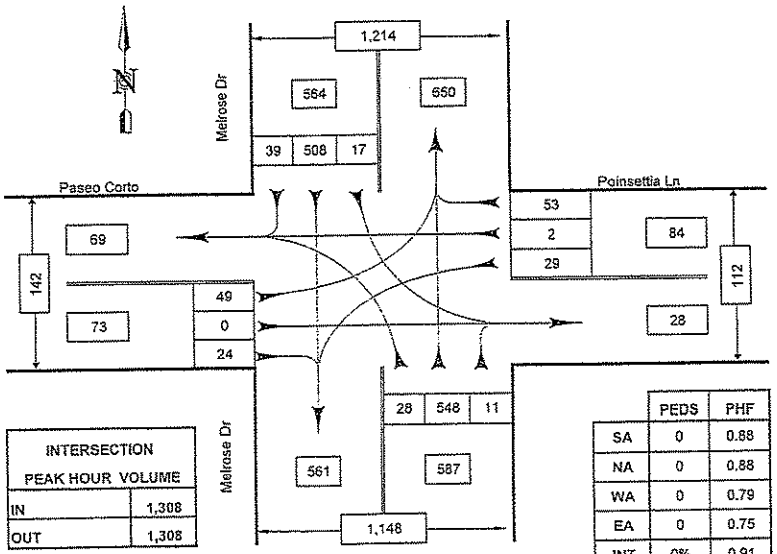

INTERSECTION PEAK HOUR VOLUME	
IN	1,308
OUT	1,308

	PEDS	PHF
SA	0	0.88
NA	0	0.88
WA	0	0.79
EA	0	0.75
INT	0%	0.91

PEDS = Pedestrians
PHF = Peak Hour Factor

Melrose Dr and Poinsettia Ln

Carlsbad, CA

COUNTED BY: BW
REDUCED BY: JR
DATE: 1/15/2006

DATE OF COUNT: 1/12/06
TIME OF COUNT: AM Peak
WEATHER: Clear

PRIORITY ENGINEERING, INC.

INTERSECTION TURNING MOVEMENTS REDUCTION SHEET

ATION: Melrose Dr and Poinsettia Ln/Paseo Corto
Carlsbad, CA

DATE OF COUNT: Thu. 1/12/06
TIME OF COUNT: PM Peak

COUNTED BY: BW
WEATHER: Clear

TIME INTERVAL ENDING AT	FROM NORTH ON (SB) Melrose Dr				FROM SOUTH ON (NB) Melrose Dr				FROM EAST ON (WB) Poinsettia Ln				FROM WEST ON (EB) Paseo Corto				INTERVAL TOTALS
	Right	Thru	Left	Peds	Right	Thru	Left	Peds	Right	Thru	Left	Peds	Right	Thru	Left	Peds	
04:15 PM	5	109	8	0	6	103	7	0	1	17	5	0	9	3	8	0	281
04:30 PM	11	100	8	0	3	91	2	0	2	0	4	0	4	1	7	0	233
04:45 PM	16	120	7	0	4	80	6	0	5	0	4	0	7	0	10	0	260
05:00 PM	12	124	12	0	5	82	6	0	5	0	1	0	4	0	9	0	260
05:15 PM	15	148	11	0	5	111	3	0	4	1	2	0	6	1	11	0	318
05:30 PM	12	153	13	0	6	88	5	0	6	0	2	0	13	0	7	0	305
05:45 PM	12	158	15	0	4	82	6	0	6	1	4	0	7	0	12	0	307
06:00 PM	11	135	13	0	7	64	4	0	7	0	5	0	10	1	12	0	270
PEAK HOUR TOTALS	50	594	52	0	22	345	18	0	23	2	14	0	36	2	42	0	INTERSECTION
ALL MOVEMENTS	696				385				39				80				1200
PEAK HOUR FACTOR	0.94				0.81				0.75				0.87				0.94

S = Pedestrians Across Intersection Leg
= Peak Hour Factor

PM PEAK HOUR: 5:00 PM TO 6:00 PM

UCED BY: JR

DATE OF REDUCTION: 1/15/2006

PRIORITY ENGINEERING, INC.

INTERSECTION TURNING MOVEMENTS REDUCTION SHEET

TURNING MOVEMENTS DIAGRAM

PM PEAK HOUR ENDING AT 6:00 PM

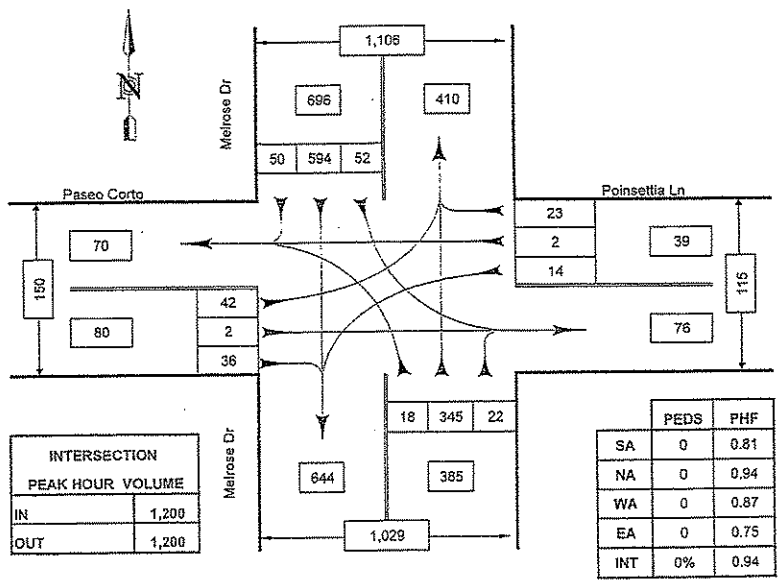

INTERSECTION PEAK HOUR VOLUME	
IN	1,200
OUT	1,200

	PEDS	PHF
SA	0	0.81
NA	0	0.94
WA	0	0.87
EA	0	0.75
INT	0%	0.94

PEDS = Pedestrians
PHF = Peak Hour Factor

Melrose Dr and Poinsettia Ln/Paseo Corto

Carlsbad, CA

COUNTED BY: BW
REDUCED BY: JR
DATE: 1/15/2006

DATE OF COUNT: 1/12/06
TIME OF COUNT: PM Peak
WEATHER: Clear

EX 7-8

8 A-P EX

Intersection Capacity Utilization (ICU) Worksheet

INTERSECTION CAPACITY UTILIZATION

INTERSECTION: Melrose Dr (N/S) Carillo Wy (E/W)
SCENARIO : Existing
COUNT DATE: 1/12/06 PEAK HR: AM
ANALYST : MTM AGENCY : Willdan

MOVEMENT	# OF LANES	CAPACITY	AM PEAK HOUR	UNADJUSTED VOLUME	AM PEAK V/C	
NB Left	1	1,800	117		0.07	*
NB Thru +RT	3	6,000	492+5		0.08	
NB Right	Ø	—	5		—	
SB Left	1	1,800	3		0.00	
SB Thru +RT	3	6,000	370+234		0.10	*
SB Right	Ø	—	232		—	
EB Left	1	1,800	147		0.08	*
EB Thru +RT	1	2,000	15+47		0.03	
EB Right	Ø	—	47		—	
WB Left	1	1,800	20		0.01	
WB Thru + RT	1	2,000	50+3		0.03	*
WB Right	Ø	—	8		—	
NORTH/SOUTH CRITICAL SUMS					0.17	
EAST/WEST CRITICAL SUMS					0.11	
SUM OF CRITICAL V/C RATIO					0.28	
ADJUSTMENT FOR LOST TIME					0.10	
INTERSECTION CAPACITY UTILIZATION (ICU)					0.38	
LEVEL OF SERVICE (LOS)					A	

NOTES:

* Denotes Critical Movements
** Extra wide outside lane

LOS	Maximum V/C
A	≤ 0.60
B	≤ 0.70
C	≤ 0.80
D	≤ 0.90
E	≤ 1.00
F	>1.00

INTERSECTION CAPACITY UTILIZATION

INTERSECTION: Melrose Dr (N/S) Carillo Wy (E/W)
SCENARIO : Existing
COUNT DATE: 1/12/06 PEAK HR: PM
ANALYST : MTM AGENCY : Willdan

MOVEMENT	# OF LANES	CAPACITY	PM PEAK HOUR	UNADJUSTED VOLUME	PM PEAK V/C	
NB Left	1	1,800	27		0.02	*
NB Thru +RT	3	6,000	388+19		0.07	
NB Right	Ø	—	19		—	
SB Left	1	1,800	13		0.01	
SB Thru +RT	3	6,000	591+65		0.11	*
SB Right	Ø	—	68		—	
EB Left	1	1,800	144		0.08	*
EB Thru +RT	1	2,000	36+81		0.06	
EB Right	Ø	—	81		—	
WB Left	1	1,800	11		0.01	
WB Thru +RT	1	2,000	9+8		0.01	*
WB Right	Ø	—	8		—	
NORTH/SOUTH CRITICAL SUMS					0.13	
EAST/WEST CRITICAL SUMS					0.09	
SUM OF CRITICAL V/C RATIO					0.22	
ADJUSTMENT FOR LOST TIME					0.10	
INTERSECTION CAPACITY UTILIZATION (ICU)					0.32	
LEVEL OF SERVICE (LOS)					A	

NOTES:

* Denotes Critical Movements
** Extra wide outside lane

LOS	Maximum V/C
A	≤ 0.60
B	≤ 0.70
C	≤ 0.80
D	≤ 0.90
E	≤ 1.00
F	>1.00

08 A+P EX

PRIORITY ENGINEERING, INC.

INTERSECTION TURNING MOVEMENTS REDUCTION SHEET

ON: Melrose Dr and Carillo Wy
Carlsbad, CA

DATE OF COUNT: Thu, 1/12/06
TIME OF COUNT: AM Peak

COUNTED BY: RM
WEATHER: Clear

TIME INTERVAL ENDING AT	FROM NORTH ON (SB) Melrose Dr				FROM SOUTH ON (NB) Melrose Dr				FROM EAST ON (WB) Carillo Wy				FROM WEST ON (EB) Carillo Wy				INTERVAL TOTALS
	Right	Thru	Left	Peds	Right	Thru	Left	Peds	Right	Thru	Left	Peds	Right	Thru	Left	Peds	
07:15 AM	38	125	2	0	1	87	21	0	3	8	5	0	5	3	15	0	313
07:30 AM	22	129	1	0	2	120	28	0	0	5	7	0	6	1	16	0	329
07:45 AM	41	143	0	0	3	123	29	0	2	8	5	0	2	2	15	0	364
08:00 AM	31	108	1	0	0	170	34	0	1	10	6	0	13	4	28	0	406
08:15 AM	25	110	0	0	0	129	27	0	2	9	4	0	6	0	17	0	330
08:30 AM	41	87	0	0	3	122	18	0	2	6	2	0	4	1	19	0	305
08:45 AM	70	91	2	0	0	135	34	0	1	16	5	0	16	4	38	0	412
09:00 AM	95	82	1	0	2	106	38	0	3	19	9	0	21	10	73	0	459
PEAK HOUR TOTALS	232	370	3	0	5	492	117	0	8	50	20	0	47	15	147	0	INTERSECTION
ALL MOVEMENTS	605				614				78				209				1506
PEAK HOUR FACTOR	0.85				0.91				0.63				0.50				0.82

Pedestrians Across Intersection Leg
'eak Hour Factor

AM PEAK HOUR: 8:00 AM TO 9:00 AM

EO BY: JR

DATE OF REDUCTION: 1/15/2006

PRIORITY ENGINEERING, INC.

INTERSECTION TURNING MOVEMENTS REDUCTION SHEET

TURNING MOVEMENTS DIAGRAM

AM PEAK HOUR ENDING AT 9:00 AM

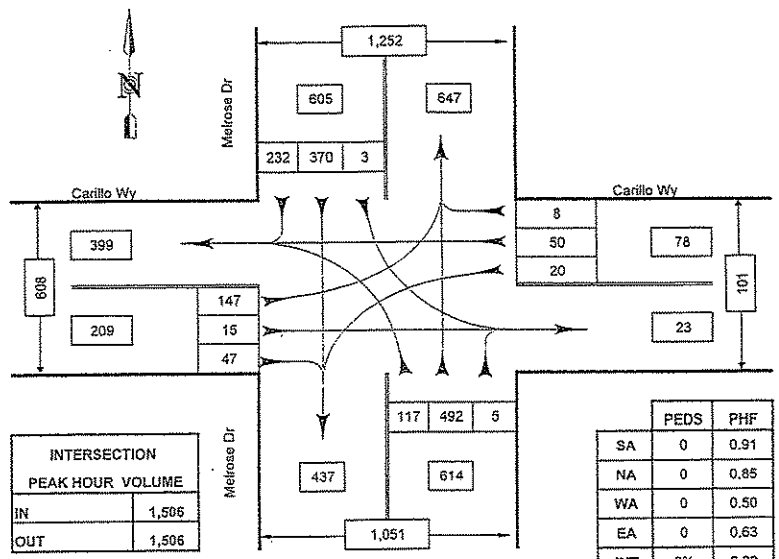

INTERSECTION PEAK HOUR VOLUME	
IN	1,506
OUT	1,506

	PEDS	PHF
SA	0	0.91
NA	0	0.85
WA	0	0.50
EA	0	0.63
INT	0%	0.82

PEDS = Pedestrians
PHF = Peak Hour Factor

Melrose Dr and Carillo Wy

Carlsbad, CA

COUNTED BY: RM
REDUCED BY: JR
DATE: 1/15/2006

DATE OF COUNT: 1/12/06
TIME OF COUNT: AM Peak
WEATHER: Clear

8

PRIORITY ENGINEERING, INC.

INTERSECTION TURNING MOVEMENTS REDUCTION SHEET

.TION: Melrose Dr and Carillo Wy
Carlsbad, CA

DATE OF COUNT: Thu. 1/12/06
TIME OF COUNT: PM Peak

COUNTED BY: RM
WEATHER: Clear

TIME INTERVAL ENDING AT	FROM NORTH ON (SB) Melrose Dr				FROM SOUTH ON (NB) Melrose Dr				FROM EAST ON (WB) Carillo Wy				FROM WEST ON (EB) Carillo Wy				INTERVAL TOTALS
	Right	Thru	Left	Peds	Right	Thru	Left	Peds	Right	Thru	Left	Peds	Right	Thru	Left	Peds	
04:15 PM	17	98	0	0	3	78	9	0	8	14	7	0	12	10	41	0	297
04:30 PM	24	104	3	0	4	111	3	0	2	4	3	0	18	10	36	0	322
04:45 PM	21	106	2	0	7	77	5	0	3	3	6	0	15	9	41	0	295
05:00 PM	20	144	4	0	5	85	11	0	1	3	5	0	9	9	34	0	339
05:15 PM	19	146	4	0	7	126	5	0	1	1	1	0	22	8	35	0	375
05:30 PM	13	136	3	0	2	89	7	0	5	2	3	0	23	9	40	0	332
05:45 PM	16	165	2	0	5	88	4	0	1	3	2	0	27	10	35	0	358
06:00 PM	16	136	1	0	7	64	7	0	1	3	3	0	21	8	34	0	301
PEAK HOUR TOTALS	68	591	13	0	19	388	27	0	8	9	11	0	81	36	144	0	INTERSECTION
ALL MOVEMENTS	672				434				28				261				1395
PEAK HOUR FACTOR	0.92				0.79				0.70				0.91				0.93

; = Pedestrians Across Intersection Leg
= Peak Hour Factor

PM PEAK HOUR: 4:45 PM TO 5:45 PM

JCED BY: JR

DATE OF REDUCTION: 1/15/2006

PRIORITY ENGINEERING, INC.

INTERSECTION TURNING MOVEMENTS REDUCTION SHEET

TURNING MOVEMENTS DIAGRAM

PM PEAK HOUR ENDING AT 5:45 PM

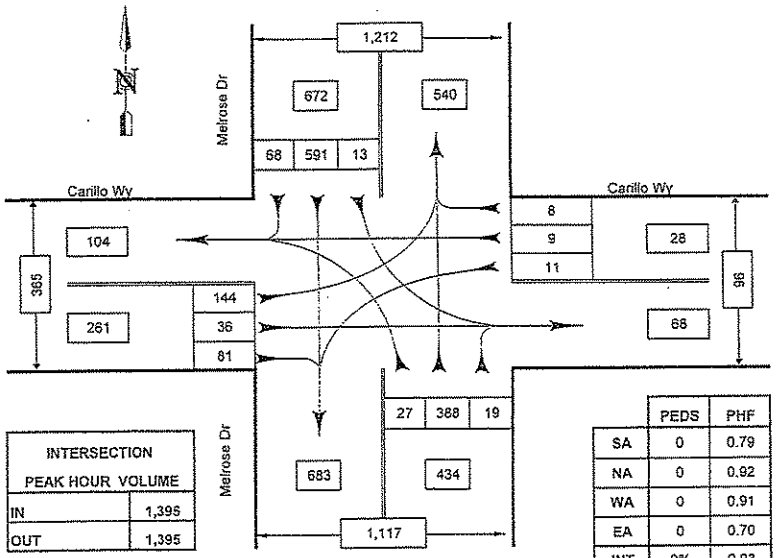

INTERSECTION PEAK HOUR VOLUME	
IN	1,395
OUT	1,395

	PEDS	PHF
SA	0	0.79
NA	0	0.92
WA	0	0.91
EA	0	0.70
INT	0%	0.93

PEDS = Pedestrians
PHF = Peak Hour Factor

Melrose Dr and Carillo Wy

Carlsbad, CA

COUNTED BY: RM
REDUCED BY: JR
DATE: 1/15/2006

DATE OF COUNT: 1/12/06
TIME OF COUNT: PM Peak
WEATHER: Clear

III. 8
D

9-A

EXIST.

Melrose Drive at Alga Road

Lane Configuration for Intersection Capacity Utilization

Pk. Hr. Time Period : 7:15 AM to 8:15 AM		South Appr (NB)			North Appr (SB)			West Appr (EB)			East Appr (WB)		
		Left	Thru	Right	Left	Thru	Right	Left	Thru	Right	Left	Thru	Right
Lane Config - urations	Inside (left) 1	1			1			1			1		
	2		1			1			1	1		1	1
	3		1			1				1			
	4		1	1		1	1						
	5												
	6												
	Outside 7												
	Free-flow												
Lane Settings		1	3	0	1	3	0	1	1	1	1	1	0
Capacity		1800	6000	0	1800	6000	0	1800	2000	1800	1800	2000	0
Are the North/South phases split (Y/N)?				N									
Are the East/West phases split (Y/N)?				N									
Efficiency Lost Factor		0.10											
Hourly Volume		347	590	1	3	524	148	112	5	243	10	16	7
Adjusted Hourly Volume		347	591	0	3	672	0	112	248	0	10	23	0
Utilization Factor		0.19	0.10	0.00	0.00	0.11	0.00	0.06	0.12	0.00	0.01	0.01	0.00
Critical Factors		0.19				0.11			0.12		0.01		

ICU Ratio = 0.53 LOS = A

Turning Movements at Intersection of : **Melrose Drive and Alga Road**

Time : 7:15 AM
to 8:15 AM
Date : 08/09/07
Day : Thursday
Name : Newera, Leanne

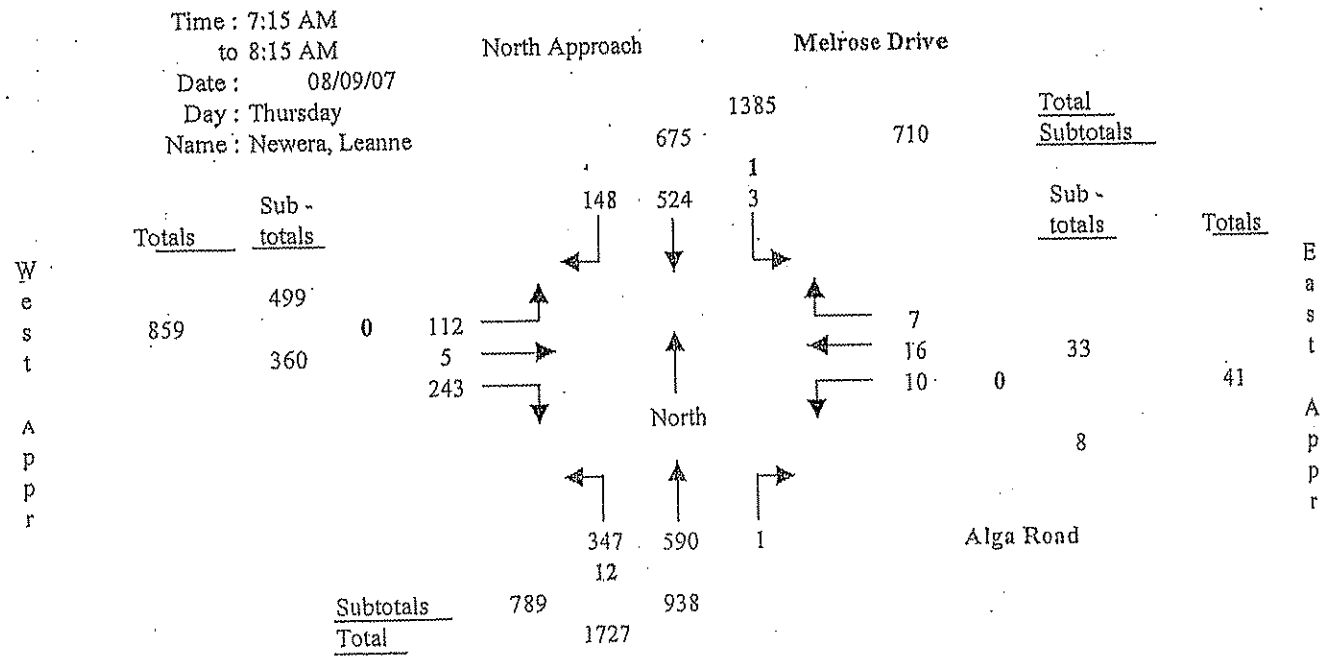

Note : Left-turn volumes include U-turns. U-turns in bold.

9-P
EXIST.

Melrose Drive at Alga Road

Lane Configuration for Intersection Capacity Utilization

Pk. Hr. Time Period : 4:30 PM to 5:30 PM		South Appr (NB)			North Appr (SB)			West Appr (EB)			East Appr (WB)		
		Left	Thru	Right	Left	Thru	Right	Left	Thru	Right	Left	Thru	Right
Lane Config - urations	Inside (left) 1	1			1			1			1		
	2		1			1			1	1		1	1
	3		1			1				1			
	4		1	1		1	1						
	5												
	6												
	Outside 7												
	Free-flow												
Lane Settings		1	3	0	1	3	0	1	1	1	1	1	0
Capacity		1800	6000	0	1800	6000	0	1800	2000	1800	1800	2000	0
Are the North/South phases split (Y/N)?				N									
Are the East/West phases split (Y/N)?				N									
Efficiency Lost Factor		0.10											
Hourly Volume		340	479	3	8	712	125	165	23	441	11	11	11
Adjusted Hourly Volume		340	482	0	8	837	0	165	464	0	11	22	0
Utilization Factor		0.19	0.08	0.00	0.00	0.14	0.00	0.09	0.23	0.00	0.01	0.01	0.00
Critical Factors		0.19				0.14			0.23		0.01		

ICU Ratio = 0.67 LOS = B

Turning Movements at Intersection of : **Melrose Drive and Alga Road**

Time : 4:30 PM
to 5:30 PM
Date : 08/09/07
Day : Thursday
Name : Newera, Leanne

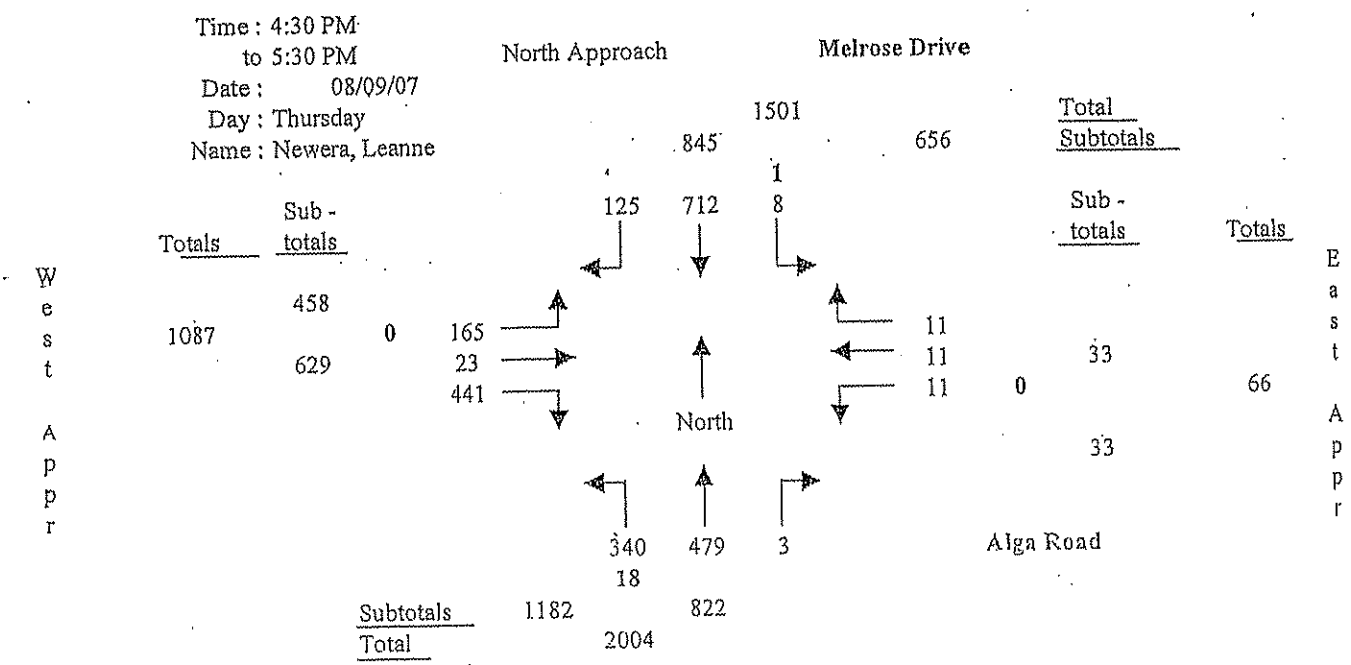

Note : Left-turn volumes include U-turns. U-turns in bold.

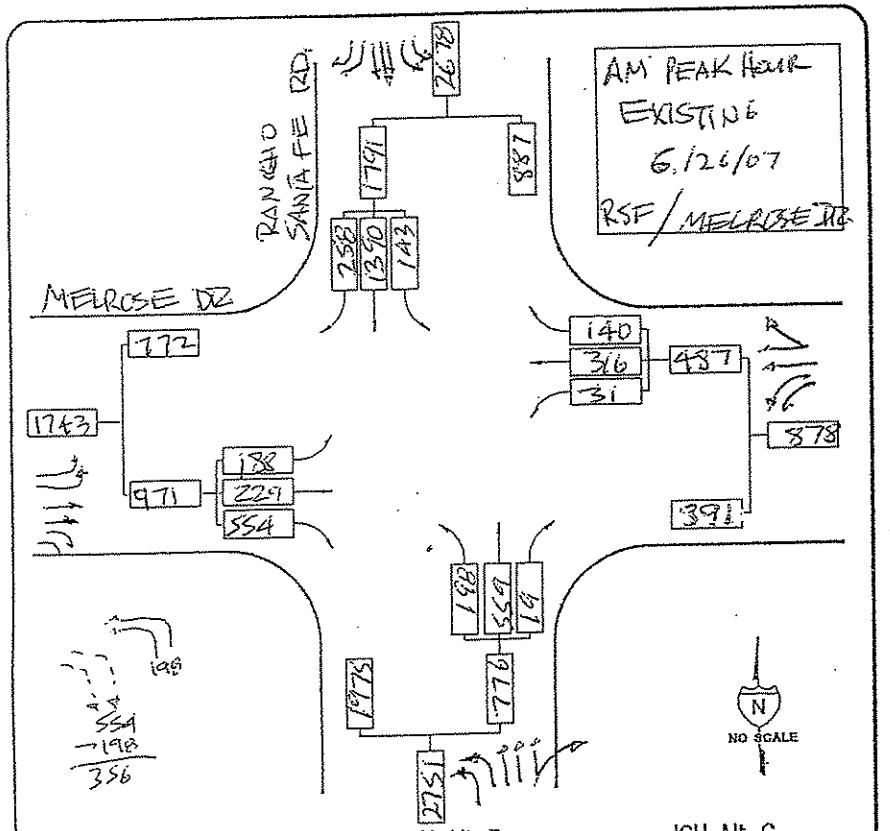

ICU Alt. A			ICU Alt. B			ICU Alt. C		
MOVE	CAPACITY	ICU	MOVE	CAPACITY	ICU	MOVE	CAPACITY	ICU
↑↑↑	1390/6000	0.23						
↰	198/3600	0.06						
↱	356/3600	0.10						
↰	31/3600	0.01						
	+	0.10						
		0.50						

L.O.S. ____ No mitigation — LOS A

L.O.S. ____ Mitigation

L.O.S. ____ Mitigation

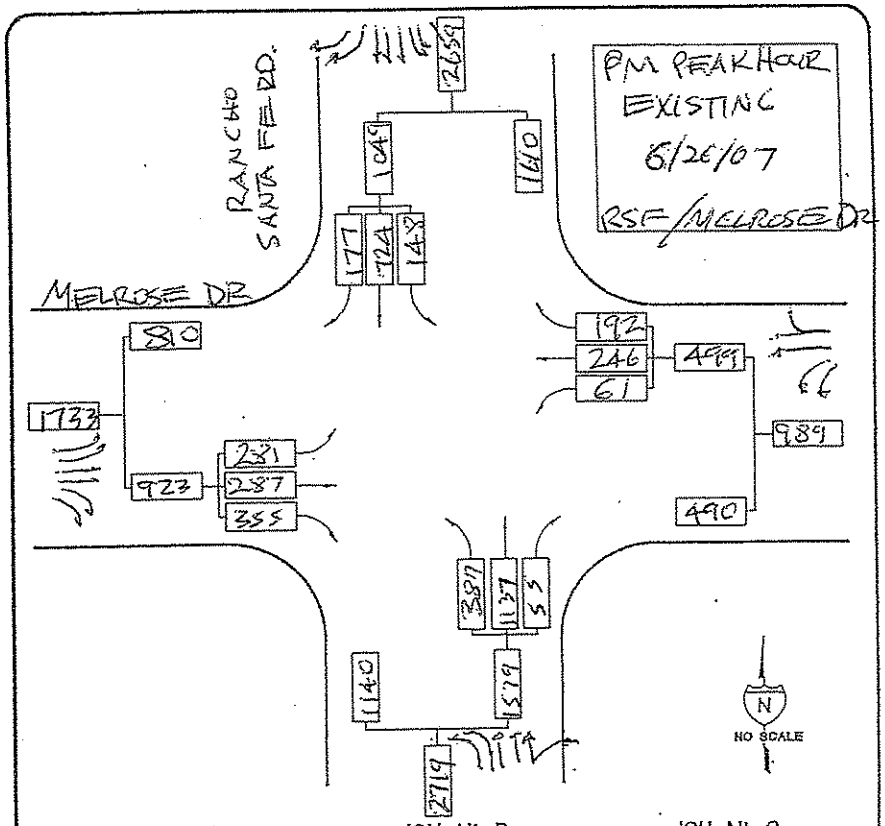

ICU Alt. A			ICU Alt. B			ICU Alt. C		
MOVE	CAPACITY	ICU	MOVE	CAPACITY	ICU	MOVE	CAPACITY	ICU
↱	246+192/4000	0.11						
↱	231/3600	0.08						
↰	140/3600	0.04						
↑↑↑	1137+55/6000	0.20						
	+	0.10						
		0.53						

L.O.S. ____ No mitigation — LOS A

L.O.S. ____ Mitigation

L.O.S. ____ Mitigation

PAGE OF

10 A APEX

MS

URBAN SYSTEMS

Transportation Studies, Inc.
1350 Reynolds Avenue
Suite 115
Irvine, CA. 92614

y: CARLSBAD
S Direction: RANCHO SANTA FE ROAD
N Direction: MELROSE DRIVE

File Name : H0706088
Site Code : 00005060
Start Date : 6/26/2007
Page No : 1

Groups Printed- Vehicles

	RANCHO SANTA FE ROAD Southbound			MELROSE DRIVE Westbound			RANCHO SANTA FE ROAD Northbound			MELROSE DRIVE Eastbound			
Start Time	Right	Thru	Left	Right	Thru	Left	Right	Thru	Left	Right	Thru	Left	Int. Total
Factor	1.0	1.0	1.0	1.0	1.0	1.0	1.0	1.0	1.0	1.0	1.0	1.0	
07:00 AM	47	289	29	25	65	5	3	107	43	99	42	41	805
07:15 AM	52	305	34	29	68	9	4	117	46	109	50	46	869
07:30 AM	58	326	37	34	76	9	3	125	53	132	57	45	965
07:45 AM	65	362	39	36	79	7	5	143	48	141	55	48	1018
Total	222	1282	139	124	289	30	15	492	189	481	204	180	3647
08:00 AM	66	358	34	36	83	8	5	146	51	138	57	46	1028
08:15 AM	69	354	33	34	78	7	6	145	46	143	60	49	1024
08:30 AM	60	339	27	31	81	5	4	132	41	134	58	42	952
08:45 AM	53	334	28	31	79	4	3	130	40	127	52	38	919
Total	248	1385	122	132	321	24	18	553	178	542	225	175	3923
BREAK ***													
04:00 PM	34	189	32	39	49	13	10	265	87	91	57	61	928
04:15 PM	37	194	33	42	55	15	14	269	92	85	64	68	966
04:30 PM	42	181	38	43	59	16	11	282	97	89	61	70	989
04:45 PM	39	190	40	46	57	15	15	278	92	91	65	64	992
Total	152	754	143	170	220	59	50	1095	368	356	247	261	3875
05:00 PM	47	178	35	51	62	18	15	292	99	87	74	70	1028
05:15 PM	49	174	38	46	67	18	14	285	91	89	73	76	1018
05:30 PM	42	182	35	49	60	12	11	282	105	88	75	71	1012
05:45 PM	36	176	33	44	60	15	12	289	95	87	69	69	985
Total	174	710	141	190	249	61	52	1128	390	351	291	286	4023
Grand Total	796	4131	545	616	1079	174	135	3268	1125	1730	967	902	15468
Apprch %	14.5	75.5	10.0	33.0	57.7	9.3	3.0	72.2	24.8	46.1	26.9	25.1	
Total %	5.1	26.7	3.5	4.0	7.0	1.1	0.9	21.1	7.3	11.2	6.3	5.8	

Transportation Studies, Inc.
1350 Reynolds Avenue
Suite 115
Irvine, CA. 92614

City: CARLSBAD
N-S Direction: RANCHO SANTA FE ROAD
E-W Direction: MELROSE DRIVE

File Name : H0706088
Site Code : 00005060
Start Date : 6/26/2007
Page No : 2

	RANCHO SANTA FE ROAD Southbound				MELROSE DRIVE Westbound				RANCHO SANTA FE ROAD Northbound				MELROSE DRIVE Eastbound				
Start Time	Right	Thru	Left	App. Total	Right	Thru	Left	App. Total	Right	Thru	Left	App. Total	Right	Thru	Left	App. Total	Int. Total
Peak Hour From 07:00 AM to 08:45 AM - Peak 1 of 1																	
Intersection 07:30 AM																	
Volume	258	1390	143	1791	140	316	31	487	19	559	198	776	554	229	188	971	4025
Percent	14.4	77.6	8.0		28.7	64.9	6.4		2.4	72.0	25.5		57.1	23.6	19.4		
08:00 Volume	66	358	34	458	36	83	8	127	5	146	51	202	138	57	46	241	1028
Peak Factor																	0.979
High Int.	08:00 AM				08:00 AM				08:00 AM				08:15 AM				
Volume	66	358	34	458	36	83	8	127	5	146	51	202	143	60	49	252	
Peak Factor				0.978				0.959				0.960				0.963	

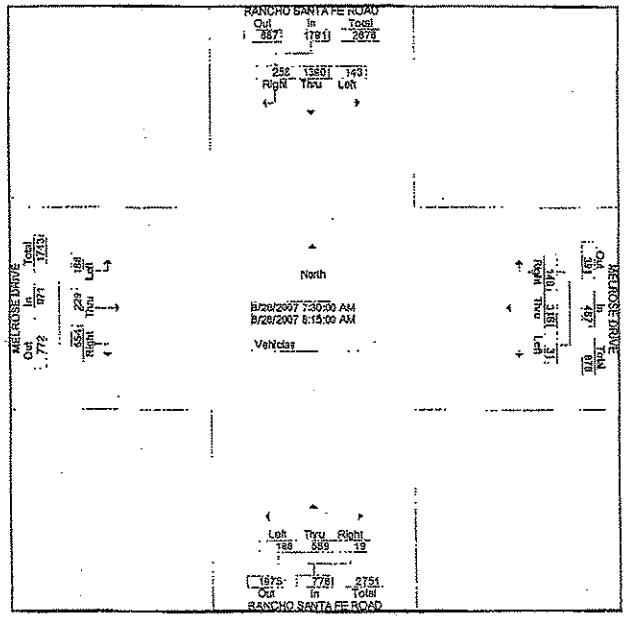

10A
EX

Transportation Studies, Inc.
1350 Reynolds Avenue
Suite 115
Irvine, CA. 92614

10 P EX

City: CARLSBAD
N-S Direction: RANCHO SANTA FE ROAD
E-W Direction: MELROSE DRIVE

File Name : H0706088
Site Code : 00005060
Start Date : 6/26/2007
Page No : 3

	RANCHO SANTA FE ROAD Southbound				MELROSE DRIVE Westbound				RANCHO SANTA FE ROAD Northbound				MELROSE DRIVE Eastbound				
Start Time	Right	Thru	Left	App. Total	Right	Thru	Left	App. Total	Right	Thru	Left	App. Total	Right	Thru	Left	App. Total	Int. Total
Peak Hour From 04:00 PM to 05:45 PM - Peak 1 of 1																	
Intersection	04:45 PM																
Volume	177	724	148	1049	192	246	61	499	55	1137	387	1579	355	287	281	923	4050
Percent	16.9	69.0	14.1		38.5	49.3	12.2		3.5	72.0	24.5		38.5	31.1	30.4		
05:00 Volume	47	178	35	260	51	62	18	131	15	292	99	406	87	74	70	231	1028
Peak Factor																	0.985
High Int.	04:45 PM				05:00 PM				05:00 PM				05:15 PM				
Volume	39	190	40	269	51	62	18	131	15	292	99	406	89	73	76	238	
Peak Factor				0.975				0.952				0.972				0.970	

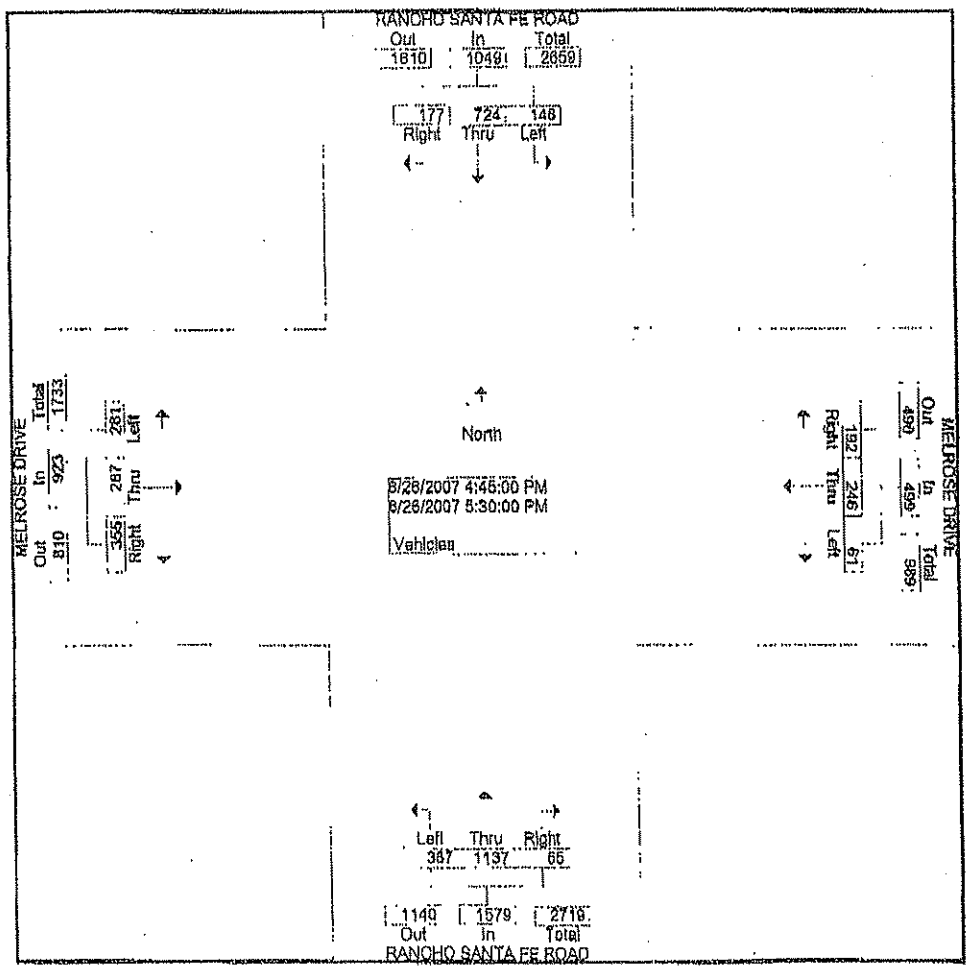

11-A
EXIST.

Rancho Santa Fe Road at San Elijo Road

Lane Configuration for Intersection Capacity Utilization

Pk. Hr. Time Period : 8:00 AM to 9:00 AM		South Appr (NB)			North Appr (SB)			West Appr (EB)			East Appr (WB)		
		Left	Thru	Right	Left	Thru	Right	Left	Thru	Right	Left	Thru	Right
Lane Configurations	Inside (left) 1	1			1			1			1		
	2		1		1				1	1	1		
	3		1			1						1	
	4		1			1							1
	5			1		1							
	6						1						
	Outside 7 Free-flow												
Lane Settings		1	3	1	2	3	1	1	1	0	2	1	1
Capacity		1800	6000	1800	3600	6000	1800	1800	2000	0	3600	2000	1800
Are the North/South phases split (Y/N)?				N									
Are the East/West phases split (Y/N)?				N									
Efficiency Lost Factor		0.10											
Hourly Volume		6	800	178	111	1447	12	9	1	3	616	4	131
Adjusted Hourly Volume		6	800	178	111	1447	12	9	4	0	616	4	131
Utilization Factor		0.00	0.13	0.10	0.03	0.24	0.01	0.01	0.00	0.00	0.17	0.00	0.07
Critical Factors		0.00				0.24			0.00		0.17		

ICU Ratio = 0.51 LOS = A

Turning Movements at Intersection of : **Rancho Santa Fe Road and San Elijo Road**

Time : 8:00 AM
to 9:00 AM
Date : 08/08/07
Day : Wednesday
Name : Lance, Lotous

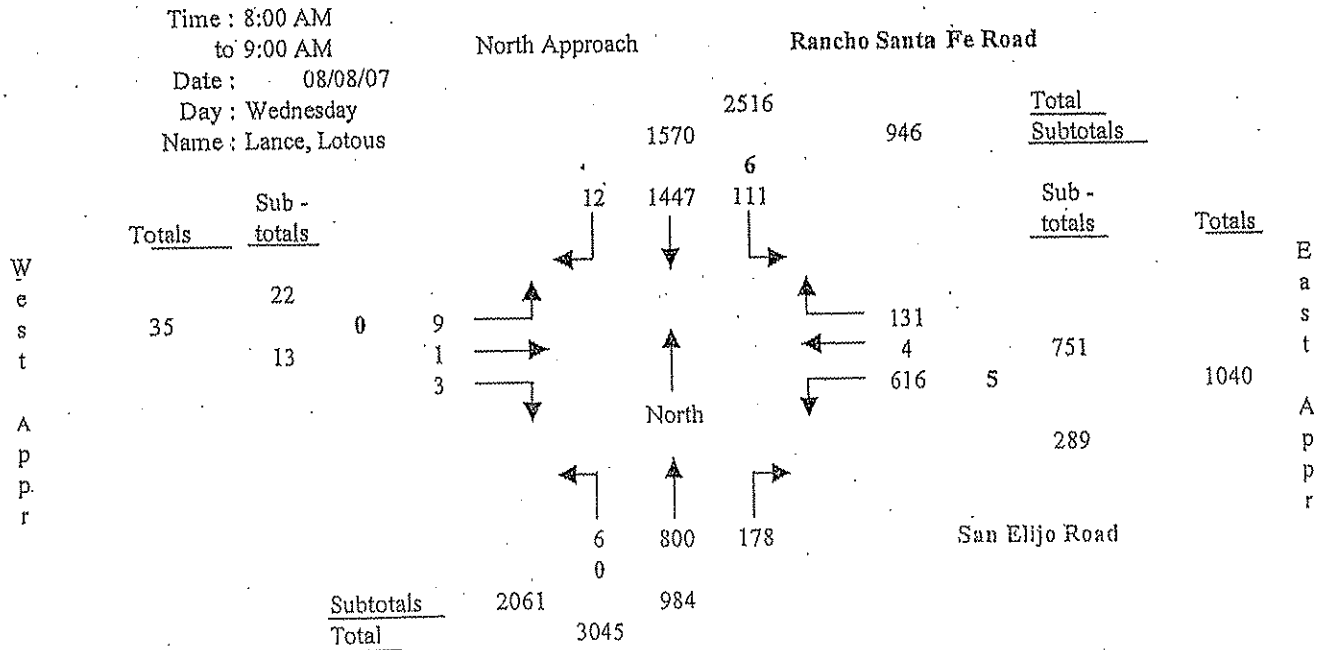

Note : Left-turn volumes include U-turns. U-turns in bold.

11-P
EXIST.

Rancho Santa Fe Road at San Elijo Road

Lane Configuration for Intersection Capacity Utilization

Pk. Hr. Time Period : 5:00 PM to 6:00 PM		South Appr (NB)			North Appr (SB)			West Appr (EB)			East Appr (WB)		
		Left	Thru	Right	Left	Thru	Right	Left	Thru	Right	Left	Thru	Right
Lane Config-urations	Inside (left) 1	1			1			1			1		
	2		1		1				1	1	1		
	3		1			1						1	
	4		1			1							1
	5			1		1							
	6						1						
	Outside 7												
	Free-flow												
Lane Settings		1	3	1	2	3	1	1	1	0	2	1	1
Capacity		1800	6000	1800	3600	6000	1800	1800	2000	0	3600	2000	1800
Are the North/South phases split (Y/N)?				N									
Are the East/West phases split (Y/N)?				N									
Efficiency Lost Factor		0.10											
Hourly Volume		2	1320	671	229	1099	0	0	1	1	307	0	81
Adjusted Hourly Volume		2	1320	671	229	1099	0	0	2	0	307	0	81
Utilization Factor		0.00	0.22	0.37	0.06	0.18	0.00	0.00	0.00	0.00	0.09	0.00	0.05
Critical Factors				0.37	0.06				0.00		0.09		

ICU Ratio = 0.62 LOS = B

Turning Movements at Intersection of : **Rancho Santa Fe Road and San Elijo Road**

Time : 5:00 PM
to 6:00 PM
Date : 08/08/07
Day : Wednesday
Name : Lance, Lotous

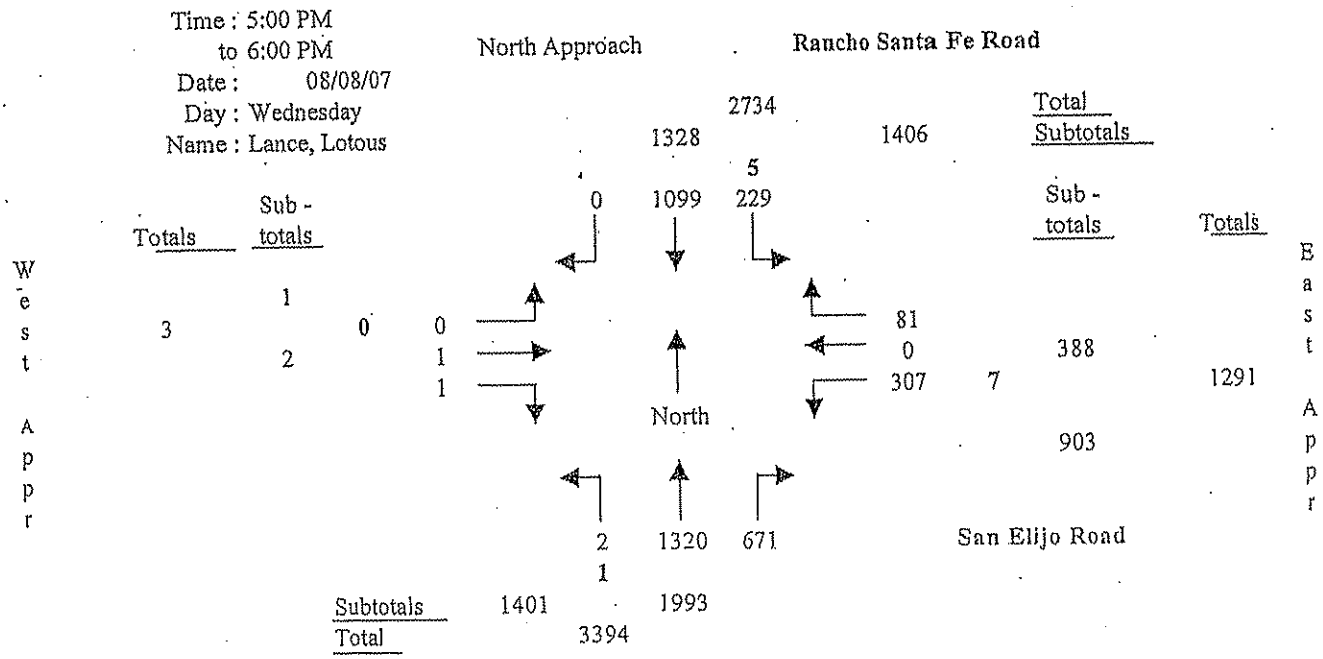

Note : Left-turn volumes include U-turns. U-turns in bold.

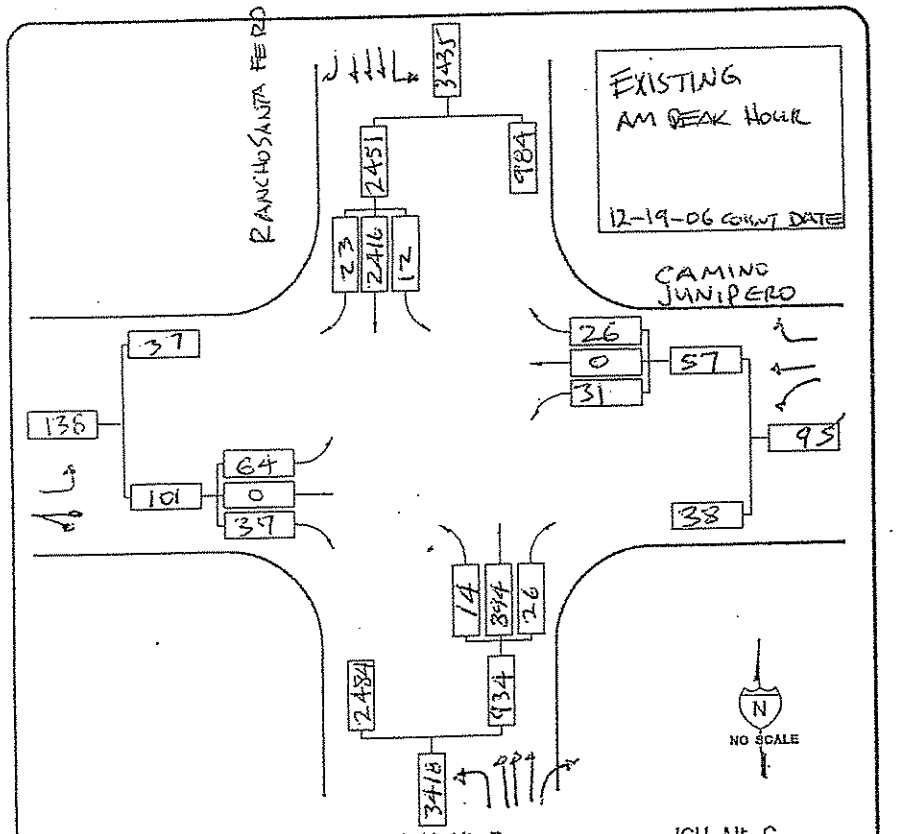

ICU Alt. A			ICU Alt. B			ICU Alt. C		
MOVE	CAPACITY	ICU	MOVE	CAPACITY	ICU	MOVE	CAPACITY	ICU
↓↓↓	2416/6000	0.40						
↰	14/1800	0.01						
←	0/2000	0.00						
↱	64/1800	0.04						
LOST TIME +		0.10						
		0.55						

L.O.S. ____ No mitigation — LOS A — L.O.S. ____ Mitigation — L.O.S. ____ Mitigation

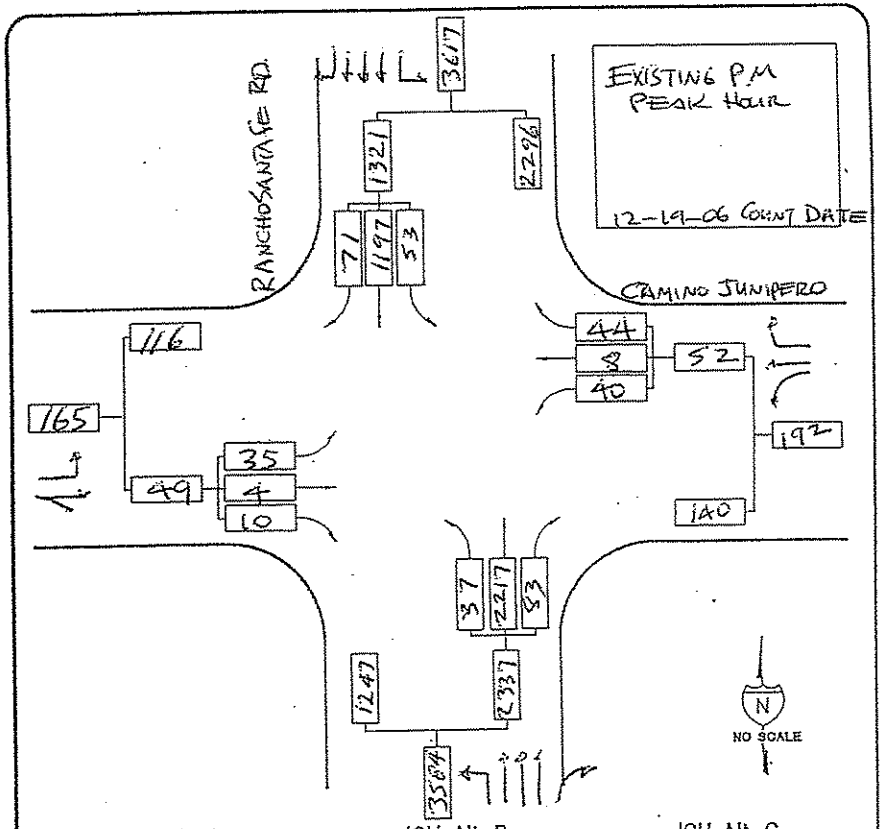

ICU Alt. A			ICU Alt. B			ICU Alt. C		
MOVE	CAPACITY	ICU	MOVE	CAPACITY	ICU	MOVE	CAPACITY	ICU
↳	53/1800	0.03						
↑↑↑	2217/6000	0.37						
↱	40/1800	0.02						
↰	14/1800	0.01						
LOST TIME		+0.10						
		0.53						

L.O.S. ____ No mitigation — LOS A — L.O.S. ____ Mitigation — L.O.S. ____ Mitigation

PAGE OF

12. EX A4P

MS

URBAN SYSTEMS

Transportation Studies, Inc.
1350 Reynolds Avenue
Suite 115
Irvine, CA. 92614

ty: CARLSBAD
-S Direction: CAMINO JUNIPERO
-W Direction: RANCHO SANTA FE ROAD

File Name : H0612037
Site Code : 00001883
Start Date : 12/19/2006
Page No : 1

Groups Printed- Turning Movements

	CAMINO JUNIPERO Southbound			RANCHO SANTA FE ROAD Westbound			CAMINO JUNIPERO Northbound			RANCHO SANTA FE ROAD Eastbound			
Start Time	Right	Thru	Left	Right	Thru	Left	Right	Thru	Left	Right	Thru	Left	Int. Total
Factor	1.0	1.0	1.0	1.0	1.0	1.0	1.0	1.0	1.0	1.0	1.0	1.0	
07:00 AM	0	0	6	3	551	8	3	2	10	5	180	2	770
07:15 AM	3	1	8	4	606	10	9	1	7	0	187	0	836
07:30 AM	6	2	6	4	606	6	3	0	16	3	171	0	823
07:45 AM	13	0	10	6	606	4	11	0	8	4	210	7	879
Total	22	3	30	17	2369	28	26	3	41	12	748	9	3308
08:00 AM	16	0	10	5	613	2	7	0	6	5	218	2	884
08:15 AM	10	0	8	7	608	3	3	0	9	9	230	3	890
08:30 AM	11	0	7	5	589	3	5	0	8	8	236	2	874
08:45 AM	9	0	6	5	567	2	4	2	5	8	221	3	832
Total	46	0	31	22	2377	10	19	2	28	30	905	10	3480
* BREAK ***													
04:00 PM	1	0	18	13	271	7	10	0	4	5	510	2	841
04:15 PM	2	1	14	15	282	9	13	0	3	8	531	4	882
04:30 PM	2	0	17	21	289	11	17	0	6	11	547	6	927
04:45 PM	3	0	14	19	298	13	15	1	11	13	530	8	925
Total	8	1	63	68	1140	40	55	1	24	37	2118	20	3575
05:00 PM	3	2	17	13	308	11	14	2	10	17	557	6	960
05:15 PM	1	0	18	18	291	14	9	1	8	22	562	10	954
05:30 PM	2	2	16	17	311	16	12	2	13	22	551	9	973
05:45 PM	4	0	13	23	287	12	9	3	9	22	547	12	941
Total	10	4	64	71	1197	53	44	8	40	83	2217	37	3828
Grand Total	86	8	188	178	7083	131	144	14	133	162	5988	76	14191
Apprch %	30.5	2.8	66.7	2.4	95.8	1.8	49.5	4.8	45.7	2.6	96.2	1.2	
Total %	0.6	0.1	1.3	1.3	49.9	0.9	1.0	0.1	0.9	1.1	42.2	0.5	

Transportation Studies, Inc.
1350 Reynolds Avenue
Suite 115
Irvine, CA. 92614

File Name : H0612037
Site Code : 00001883
Start Date : 12/19/2006
Page No : 2

	CAMINO JUNIPERO Southbound				RANCHO SANTA FE ROAD Westbound				CAMINO JUNIPERO Northbound				RANCHO SANTA FE ROAD Eastbound				
Start Time	Right	Thru	Left	App. Total	Right	Thru	Left	App. Total	Right	Thru	Left	App. Total	Right	Thru	Left	App. Total	Int. Total
Peak Hour From 07:00 AM to 08:45 AM - Peak 1 of 1																	
Intersection	07:45 AM																
Volume	50	0	35	85	23	2416	12	2451	26	0	31	57	26	894	14	934	3527
Percent	58.8	0.0	41.2		0.9	98.6	0.5		45.6	0.0	54.4		2.8	95.7	1.5		
08:15 Volume	10	0	8	18	7	608	3	618	3	0	9	12	9	230	3	242	890
Peak Factor																	0.991
High Int.	08:00 AM				08:00 AM				07:45 AM				08:30 AM				
Volume	16	0	10	26	5	613	2	620	11	0	8	19	8	236	2	246	
Peak Factor				0.817				0.988				0.750				0.949	

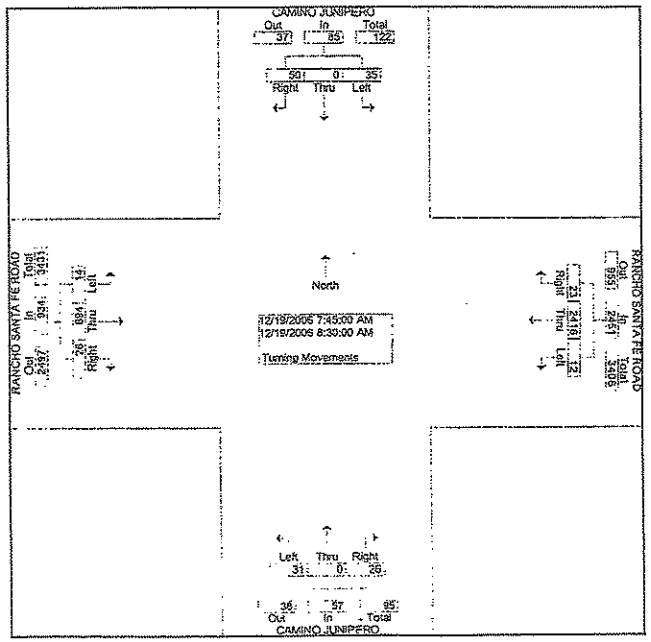

12-A-EX

12-P-EX

Transportation Studies, Inc.
1350 Reynolds Avenue
Suite 115
Irvine, CA. 92614

File Name : H0612037
Site Code : 00001883
Start Date : 12/19/2006
Page No : 3

	CAMINO JUNIPERO Southbound				RANCHO SANTA FE ROAD Westbound				CAMINO JUNIPERO Northbound				RANCHO SANTA FE ROAD Eastbound				
Start Time	Right	Thru	Left	App. Total	Right	Thru	Left	App. Total	Right	Thru	Left	App. Total	Right	Thru	Left	App. Total	Int. Total
Peak Hour From 04:00 PM to 05:45 PM - Peak 1 of 1																	
Intersection	05:00 PM																
Volume	10	4	64	78	71	1197	53	1321	44	8	40	92	83	2217	37	2337	3828
Percent	12.8	5.1	82.1		5.4	90.6	4.0		47.8	8.7	43.5		3.6	94.9	1.6		
05:30 Volume	2	2	16	20	17	311	16	344	12	2	13	27	22	551	9	582	973
Peak Factor																	0.984
High Int.	05:00 PM				05:30 PM				05:30 PM				05:15 PM				
Volume	3	2	17	22	17	311	16	344	12	2	13	27	22	562	10	594	
Peak Factor				0.886				0.960				0.852				0.984	

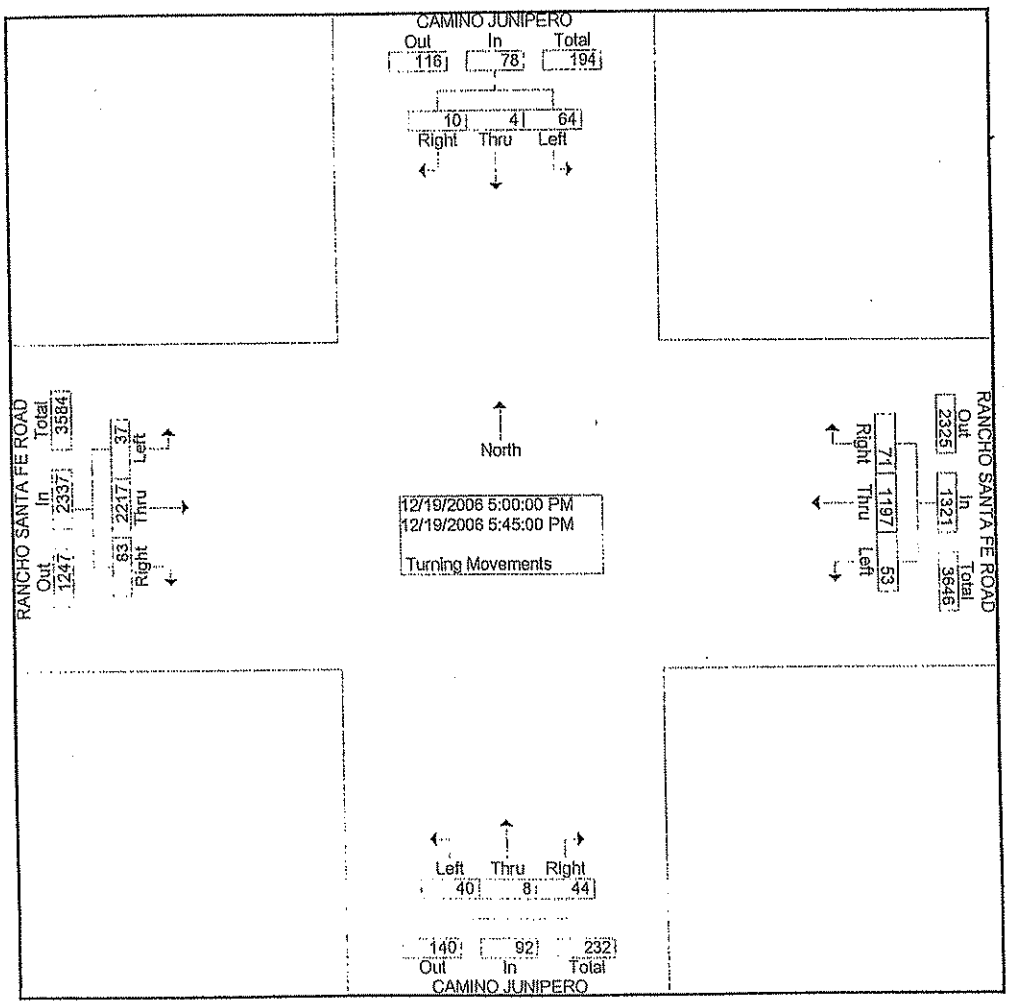

13-A
EXIST.

Rancho Santa Fe Road at La Costa Avenue

Lane Configuration for Intersection Capacity Utilization

Pk. Hr. Time Period : 8:00 AM to 9:00 AM		South Appr (NB)			North Appr (SB)			West Appr (EB)			East Appr (WB)		
		Left	Thru	Right	Left	Thru	Right	Left	Thru	Right	Left	Thru	Right
Lane Config-urations	Inside (left) 1	1			1			1			1		
	2	1			1				1			1	
	3		1			1			1	1		1	1
	4		1			1							
	5		1	1		1	1						
	6												
	Outside 7												
	Free-flow												
Lane Settings		2	3	0	2	3	0	1	2	0	1	2	0
Capacity		3600	6000	0	3600	6000	0	1800	4000	0	1800	4000	0
Are the North/South phases split (Y/N)?				N									
Are the East/West phases split (Y/N)?				N									
Efficiency Lost Factor		0.10											
Hourly Volume		83	622	3	47	1737	274	229	70	134	31	94	51
Adjusted Hourly Volume		83	625	0	47	2011	0	229	204	0	31	145	0
Utilization Factor		0.02	0.10	0.00	0.01	0.34	0.00	0.13	0.05	0.00	0.02	0.04	0.00
Critical Factors		0.02				0.34		0.13				0.04	

ICU Ratio = 0.63 LOS = B

Turning Movements at Intersection of : **Rancho Santa Fe Road and La Costa Avenue**

Time : 8:00 AM
to 9:00 AM
Date : 08/08/07
Day : Wednesday
Name : Robert, Jason

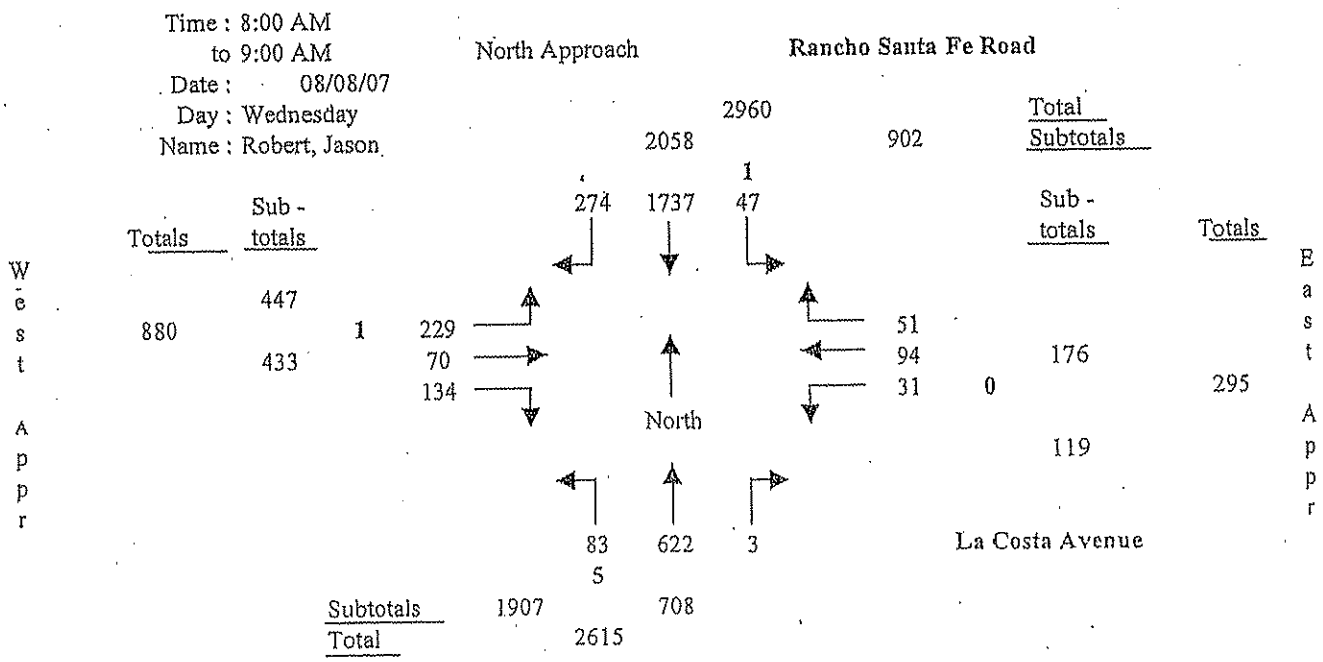

Note : Left-turn volumes include U-turns. U-turns in bold.

13-P
EXIST.

Rancho Santa Fe Road at La Costa Avenue

Lane Configuration for Intersection Capacity Utilization

Pk. Hr. Time Period : 5:00 PM to 6:00 PM		South Appr (NB)			North Appr (SB)			West Appr (EB)			East Appr (WB)		
		Left	Thru	Right	Left	Thru	Right	Left	Thru	Right	Left	Thru	Right
Lane Config-urations	Inside (left) 1	1			1			1			1		
	2	1			1				1			1	
	3		1			1			1	1		1	1
	4		1			1							
	5		1	1		1	1						
	6												
	Outside 7												
	Free-flow												
Lane Settings		2	3	0	2	3	0	1	2	0	1	2	0
Capacity		3600	6000	0	3600	6000	0	1800	4000	0	1800	4000	0
Are the North/South phases split (Y/N)?				N									
Are the East/West phases split (Y/N)?				N									
Efficiency Lost Factor		0.10											
Hourly Volume		161	1451	19	118	1028	234	379	168	145	24	79	45
Adjusted Hourly Volume		161	1470	0	118	1262	0	379	313	0	24	124	0
Utilization Factor		0.04	0.25	0.00	0.03	0.21	0.00	0.21	0.08	0.00	0.01	0.03	0.00
Critical Factors			0.25		0.03			0.21				0.03	

ICU Ratio = 0.62 LOS = B

Turning Movements at Intersection of : **Rancho Santa Fe Road and La Costa Avenue**

Time : 5:00 PM
to 6:00 PM
Date : 08/08/07
Day : Wednesday
Name : Robert, Jason

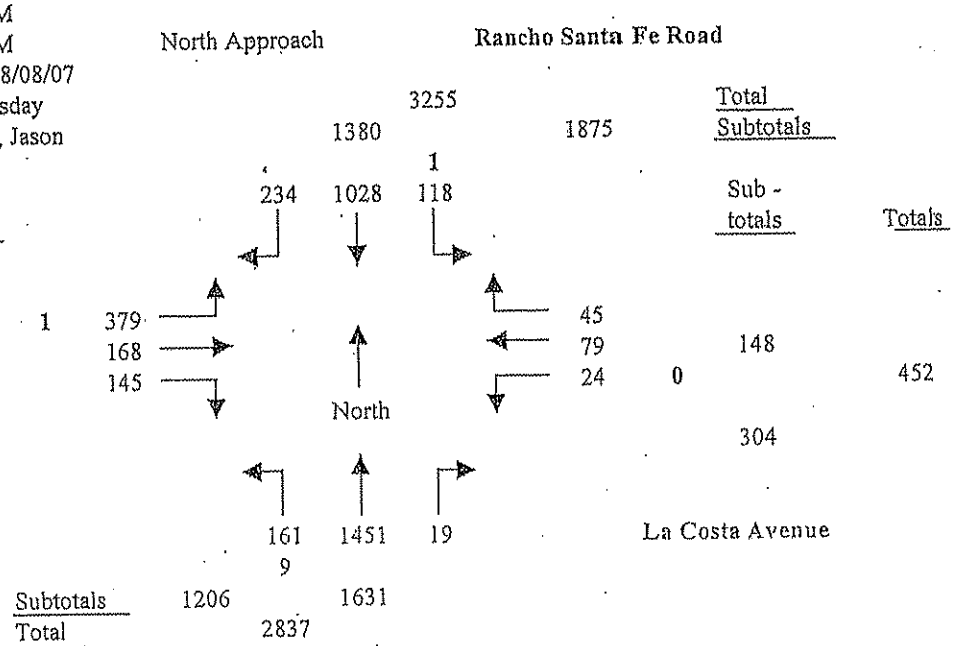

Note : Left-turn volumes include U-turns. U-turns in bold.

14-A EX.

Rancho Santa Fe Road at Camino De Los Coches

Lane Configuration for Intersection Capacity Utilization

Pk. Hr. Time Period : 7:15 AM to 8:15 AM		South Appr (NB)			North Appr (SB)			West Appr (EB)			East Appr (WB)		
		Left	Thru	Right	Left	Thru	Right	Left	Thru	Right	Left	Thru	Right
Lane Config - urations	Inside (left) 1		1		1						1		
	2		1			1					1		
	3		1	1		1							1
	4					1							
	5												
	6												
	Outside 7												
	Free-flow												
Lane Settings		0	3	0	1	3	0	0	0	0	2	0	1
Capacity		0	6000	0	1800	6000	0	0	0	0	3600	0	1800
Are the North/South phases split (Y/N)?				N									
Are the East/West phases split (Y/N)?				N									
Efficiency Lost Factor		0.10											
Hourly Volume		0	574	179	81	1657	0	0	0	0	298	0	64
Adjusted Hourly Volume		0	753	0	81	1657	0	0	0	0	298	0	64
Utilization Factor		0.00	0.13	0.00	0.05	0.28	0.00	0.00	0.00	0.00	0.08	0.00	0.04
Critical Factors		0.00				0.28			0.00	0.00	0.08		

ICU Ratio = 0.46 LOS = A

Turning Movements at Intersection of : **Rancho Santa Fe Road and Camino De Los Coches.**

Time : 7:15 AM
to 8:15 AM
Date : 07/19/06
Day : Wednesday
Name : Matt, Tyler

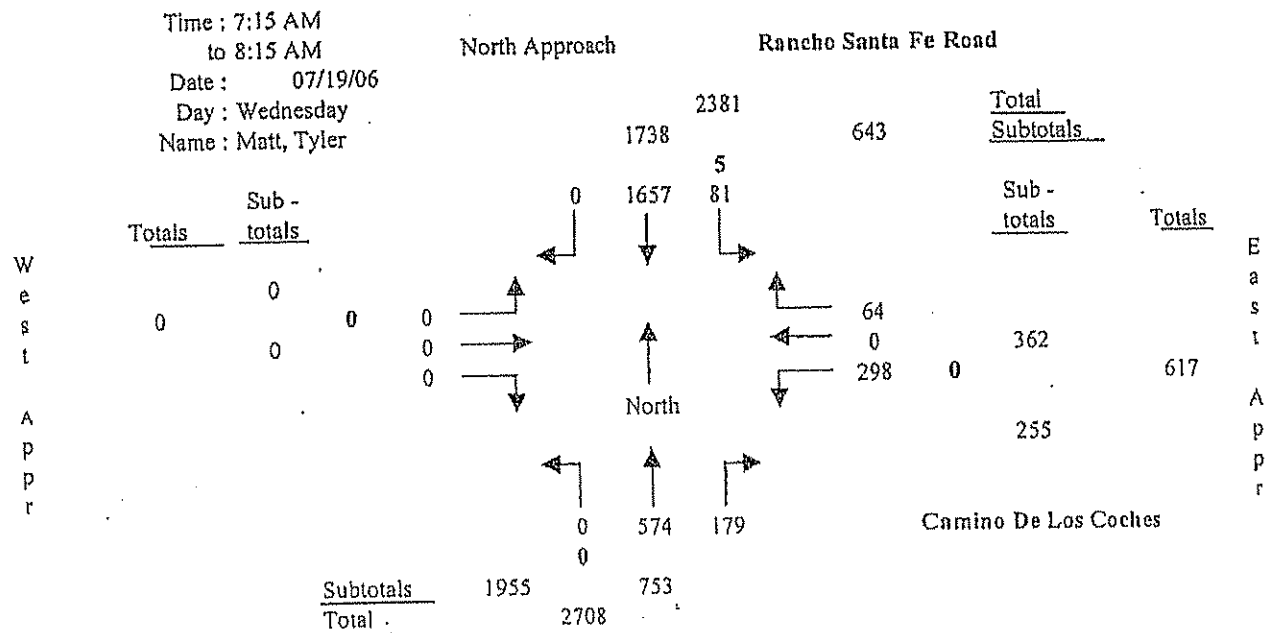

Note : Left-turn volumes include U-turns. U-turns in bold.

1A-P
Ex

Rancho Santa Fe Road at Camino De Los Coches

Lane Configuration for Intersection Capacity Utilization

Pk. Hr. Time Period : 5:00 PM to 6:00 PM		South Appr (NB)			North Appr (SB)			West Appr (EB)			East Appr (WB)		
		Left	Thru	Right	Left	Thru	Right	Left	Thru	Right	Left	Thru	Right
Lane Config-urations	Inside (left) 1		1		1						1		
	2		1			1					1		
	3		1	1		1							1
	4					1							
	5												
	6												
	Outside 7												
	Free-flow												
Lane Settings		0	3	0	1	3	0	0	0	0	2	0	1
Capacity		0	6000	0	1800	6000	0	0	0	0	3600	0	1800
Are the North/South phases split (Y/N)?				N									
Are the East/West phases split (Y/N)?				N									
Efficiency Lost Factor		0.10											
Hourly Volume		0	1472	191	73	904	0	0	0	0	112	0	151
Adjusted Hourly Volume		0	1663	0	73	904	0	0	0	0	112	0	151
Utilization Factor		0.00	0.28	0.00	0.04	0.15	0.00	0.00	0.00	0.00	0.03	0.00	0.08
Critical Factors			0.28		0.04			0.00					0.08

ICU Ratio = 0.50 LOS = A

Turning Movements at Intersection of : **Rancho Santa Fe Road and Camino De Los Coches**

Time : 5:00 PM
to 6:00 PM
Date : 07/19/06
Day : Wednesday
Name : Matt, Tyler

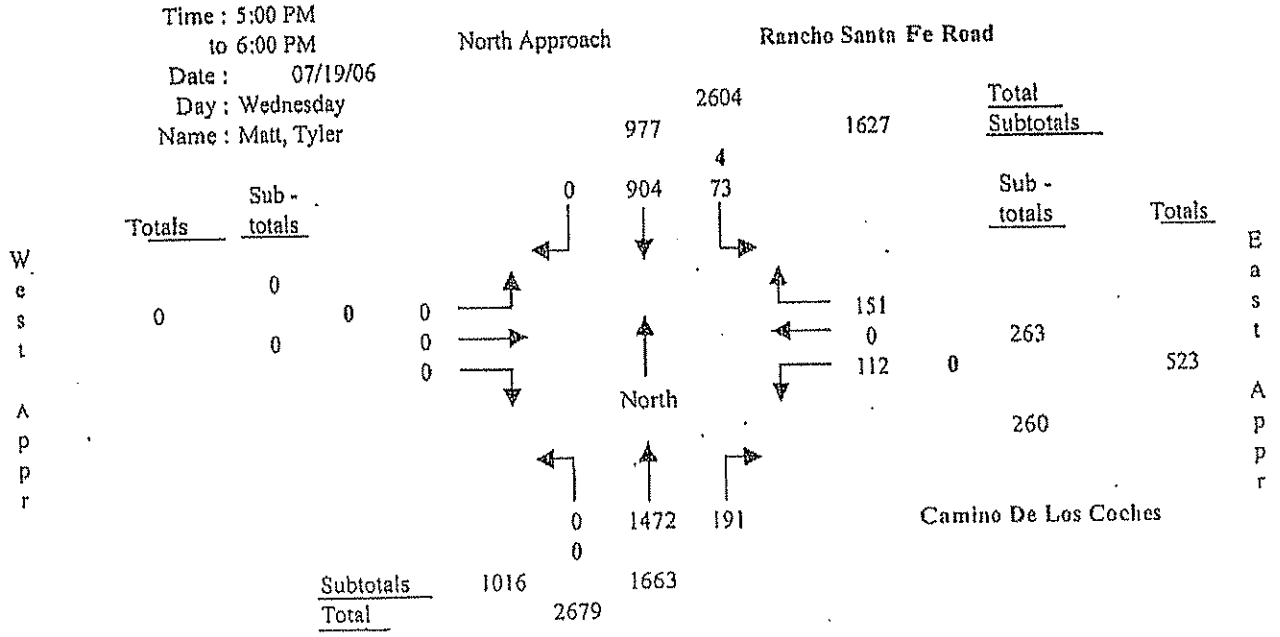

Note : Left-turn volumes include U-turns. U-turns in bold.

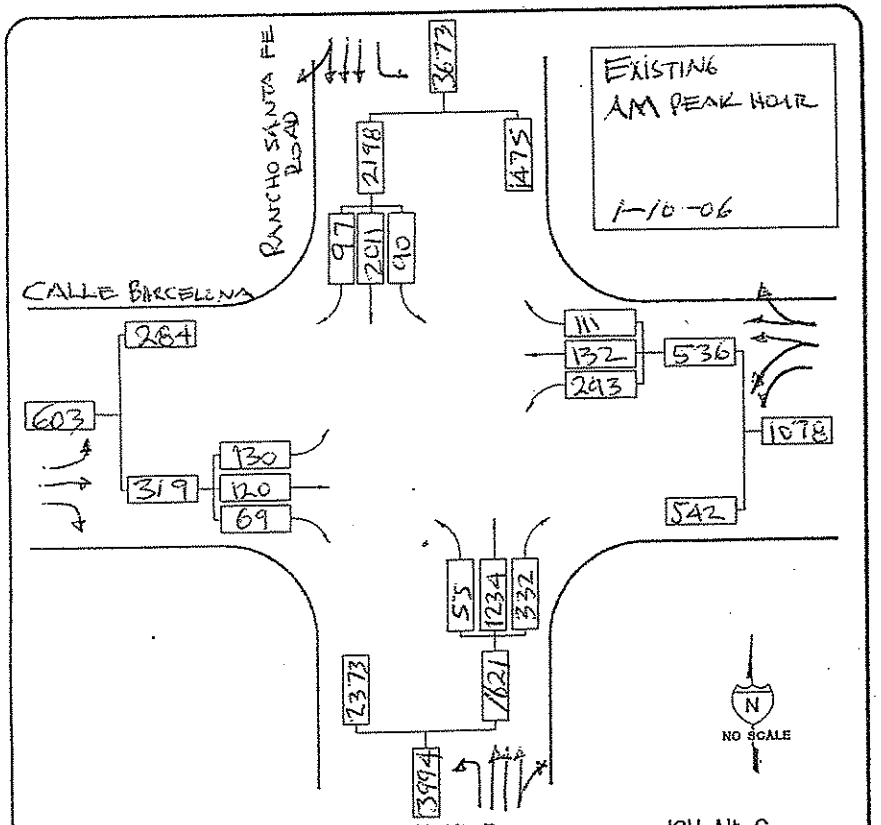

ICU Alt. A MOVE	CAPACITY	ICU	ICU Alt. B MOVE	CAPACITY	ICU	ICU Alt. C MOVE	CAPACITY	ICU
	2011+97 / 6000	0.35						
	55 / 1800	0.03						
	130 / 1800	0.07						
	536 / 5400	0.10						
	+	0.10						
		0.65						

L.O.S. ____ No mitigation LOS B

L.O.S. ____ Mitigation

L.O.S. ____ Mitigation

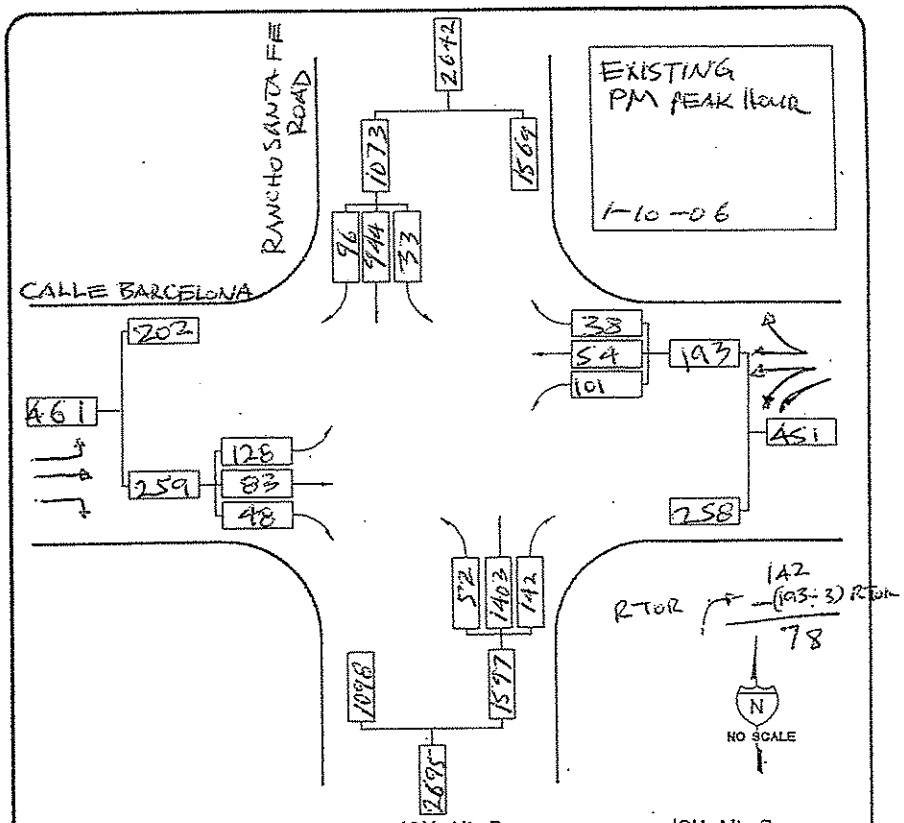

ICU Alt. A MOVE	CAPACITY	ICU	ICU Alt. B MOVE	CAPACITY	ICU	ICU Alt. C MOVE	CAPACITY	ICU
	33 / 1800	0.02						
	1403+78 / 5400	0.25						
	128 / 1800	0.07						
	193 / 5400	0.04						
	+	0.10						
		0.48						

L.O.S. ____ No mitigation LOS A

L.O.S. ____ Mitigation

L.O.S. ____ Mitigation

PAGE OF

15 A+P EX

MJ

URBAN SYSTEMS

PRIORITY ENGINEERING, INC.

INTERSECTION TURNING MOVEMENTS REDUCTION SHEET

ATION: Rancho Santa Fe Rd and Calle Barcelona
Carlsbad, CA

DATE OF COUNT: Tue. 1/10/06
TIME OF COUNT: AM Peak

COUNTED BY: TB
WEATHER: Clear

TIME INTERVAL ENDING AT	FROM NORTH ON (SB) Rancho Santa Fe Rd				FROM SOUTH ON (NB) Rancho Santa Fe Rd				FROM EAST ON (WB) Calle Barelona				FROM WEST ON (EB) Calle Barcelona				INTERVAL TOTALS
	Right	Thru	Left	Peds	Right	Thru	Left	Peds	Right	Thru	Left	Peds	Right	Thru	Left	Peds	
07:15 AM	8	483	5	0	53	325	9	0	4	28	46	0	9	42	34	0	1046
07:30 AM	10	589	10	0	140	414	3	0	6	36	59	0	9	47	48	0	1371
07:45 AM	40	517	39	0	77	283	26	0	30	36	98	0	16	16	29	0	1207
08:00 AM	39	422	36	0	62	212	17	0	71	32	90	0	35	15	19	0	1050
08:15 AM	33	455	5	0	29	216	18	0	10	17	63	0	26	5	10	0	887
08:30 AM	20	322	1	0	15	156	10	0	7	13	49	0	25	1	13	0	632
08:45 AM	23	304	9	0	7	197	10	0	5	13	28	0	13	4	13	0	626
09:00 AM	19	368	1	0	9	181	10	0	7	9	25	0	13	4	14	0	660
PEAK HOUR TOTALS	97	2011	90	0	332	1234	55	0	111	132	293	0	69	120	130	0	INTERSECTION
ALL MOVEMENTS	2198				1621				536				319				4674
PEAK HOUR FACTOR	0.90				0.73				0.69				0.77				0.85

S = Pedestrians Across Intersection Leg
= Peak Hour Factor

AM PEAK HOUR: 7:00 AM TO 8:00 AM

UCED BY: TB

DATE OF REDUCTION: 1/10/2006

PRIORITY ENGINEERING, INC.

INTERSECTION TURNING MOVEMENTS REDUCTION SHEET

TURNING MOVEMENTS DIAGRAM

AM PEAK HOUR ENDING AT 8:00 AM

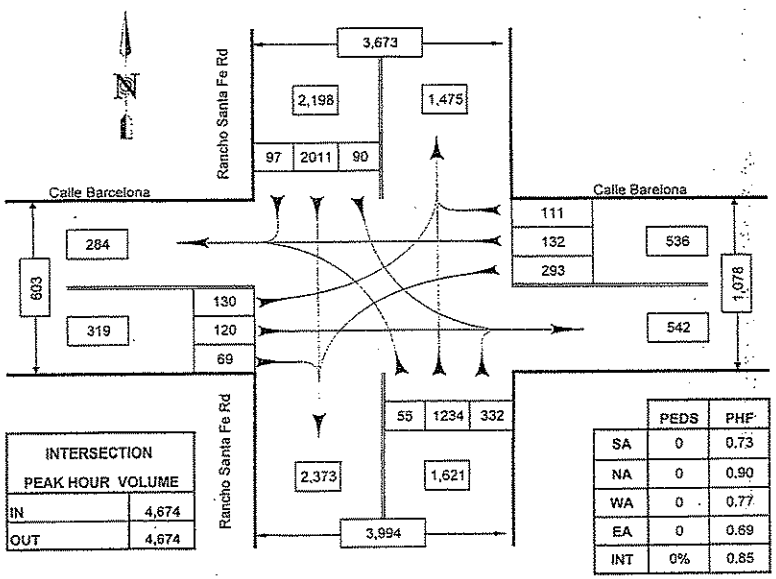

INTERSECTION PEAK HOUR VOLUME	
IN	4,674
OUT	4,674

	PEDS	PHF
SA	0	0.73
NA	0	0.90
WA	0	0.77
EA	0	0.69
INT	0%	0.85

PEDS = Pedestrians
PHF = Peak Hour Factor

Rancho Santa Fe Rd and Calle Barcelona

Carlsbad, CA

COUNTED BY: TB
REDUCED BY: JR
DATE: 1/10/2006

DATE OF COUNT: 1/10/06
TIME OF COUNT: AM Peak
WEATHER: Clear

15-A
EX

PRIORITY ENGINEERING, INC.

INTERSECTION TURNING MOVEMENTS REDUCTION SHEET

TION: Rancho Santa Fe Rd and Calle Barcelona
Carlsbad, CA

DATE OF COUNT: Tue. 1/10/06
TIME OF COUNT: PM Peak

COUNTED BY: TB
WEATHER: Clear

TIME INTERVAL ENDING AT	FROM NORTH ON (SB) Rancho Santa Fe Rd				FROM SOUTH ON (NB) Rancho Santa Fe Rd				FROM EAST ON (WB) Calle Barcelona				FROM WEST ON (EB) Calle Barcelona				INTERVAL TOTALS
	Right	Thru	Left	Peds	Right	Thru	Left	Peds	Right	Thru	Left	Peds	Right	Thru	Left	Peds	
04:15 PM	13	226	11	0	42	323	14	0	12	14	37	0	17	19	19	0	747
04:30 PM	20	260	6	0	39	338	11	0	8	21	27	0	8	10	33	0	781
04:45 PM	16	258	2	0	42	306	12	0	6	11	20	0	10	18	35	0	736
05:00 PM	24	193	7	0	43	257	17	0	5	13	38	0	25	21	23	0	666
05:15 PM	23	221	10	0	43	286	13	0	8	14	31	0	9	23	39	0	720
05:30 PM	33	237	10	0	30	347	18	0	16	16	28	0	10	18	34	0	797
05:45 PM	24	270	8	0	38	369	14	0	10	14	23	0	12	17	25	0	824
06:00 PM	16	216	5	0	31	401	7	0	4	10	19	0	17	25	30	0	781
PEAK HOUR TOTALS	96	944	33	0	142	1403	52	0	38	54	101	0	48	83	128	0	INTERSECTION
ALL MOVEMENTS	1073				1597				193				259				3122
PEAK HOUR FACTOR	0.89				0.91				0.80				0.90				0.95

= Pedestrians Across Intersection Leg
Peak Hour Factor

PM PEAK HOUR: 5:00 PM TO 6:00 PM

CED BY: TB

DATE OF REDUCTION: 1/10/2006

PRIORITY ENGINEERING, INC.

INTERSECTION TURNING MOVEMENTS REDUCTION SHEET

TURNING MOVEMENTS DIAGRAM

PM PEAK HOUR ENDING AT 6:00 PM

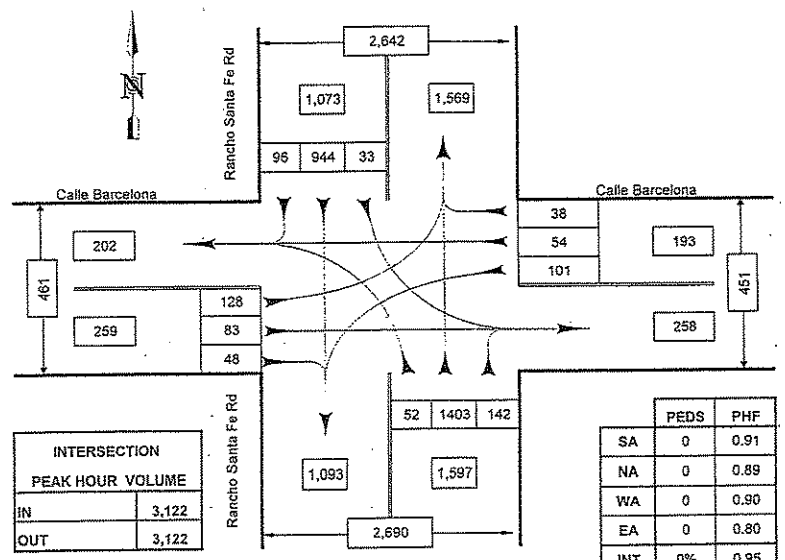

INTERSECTION PEAK HOUR VOLUME	
IN	3,122
OUT	3,122

	PEDS	PHF
SA	0	0.91
NA	0	0.89
WA	0	0.90
EA	0	0.80
INT	0%	0.95

PEDS = Pedestrians
PHF = Peak Hour Factor

Rancho Santa Fe Rd and Calle Barcelona

Carlsbad, CA

COUNTED BY: TB
REDUCED BY: JR
DATE: 1/10/2006

DATE OF COUNT: 1/10/06
TIME OF COUNT: PM Peak
WEATHER: Clear

15-8
EX

SEE ATTACHED REVISED ICU

16-A
EXIST.

Olivenhain Road/Camino Alvaro at Rancho Santa Fe Road

Lane Configuration for Intersection Capacity Utilization

Pk. Hr. Time Period : 8:00 AM to 9:00 AM		South Appr (NB)			North Appr (SB)			West Appr (EB)			East Appr (WB)		
		Left	Thru	Right	Left	Thru	Right	Left	Thru	Right	Left	Thru	Right
Lane Config-urations	Inside (left) 1	1	1		1	1	1	1			1		
	2								1			1	
	3								1	1		1	
	4												1
	5												
	6												
	Outside 7												
	Free-flow			1									
Lane Settings		0	1	0	0	1	0	1	2	0	1	2	1
Capacity		0	2000	0	0	2000	0	1800	4000	0	1800	4000	1800
Are the North/South phases split (Y/N)?				N									
Are the East/West phases split (Y/N)?				N									
Efficiency Lost Factor		0.10											
Hourly Volume		489	7	213	16	14	20	12	583	14	377	1485	28
Adjusted Hourly Volume		0	497	0	0	50	0	12	597	0	377	1485	28
Utilization Factor		0.00	0.25	0.00	0.00	0.03	0.00	0.01	0.15	0.00	0.21	0.37	0.02
Critical Factors			0.25		0.00			0.01				0.37	

ICU Ratio = 0.73 LOS = C

USE THESE COUNTS / USE REVISED LANES

Turning Movements at Intersection of : **Olivenhain Road/Camino Alvaro and Rancho Santa Fe Road**

Time : 8:00 AM
to 9:00 AM
Date : 07/12/07
Day : Thursday
Name : Raul, Alfonso

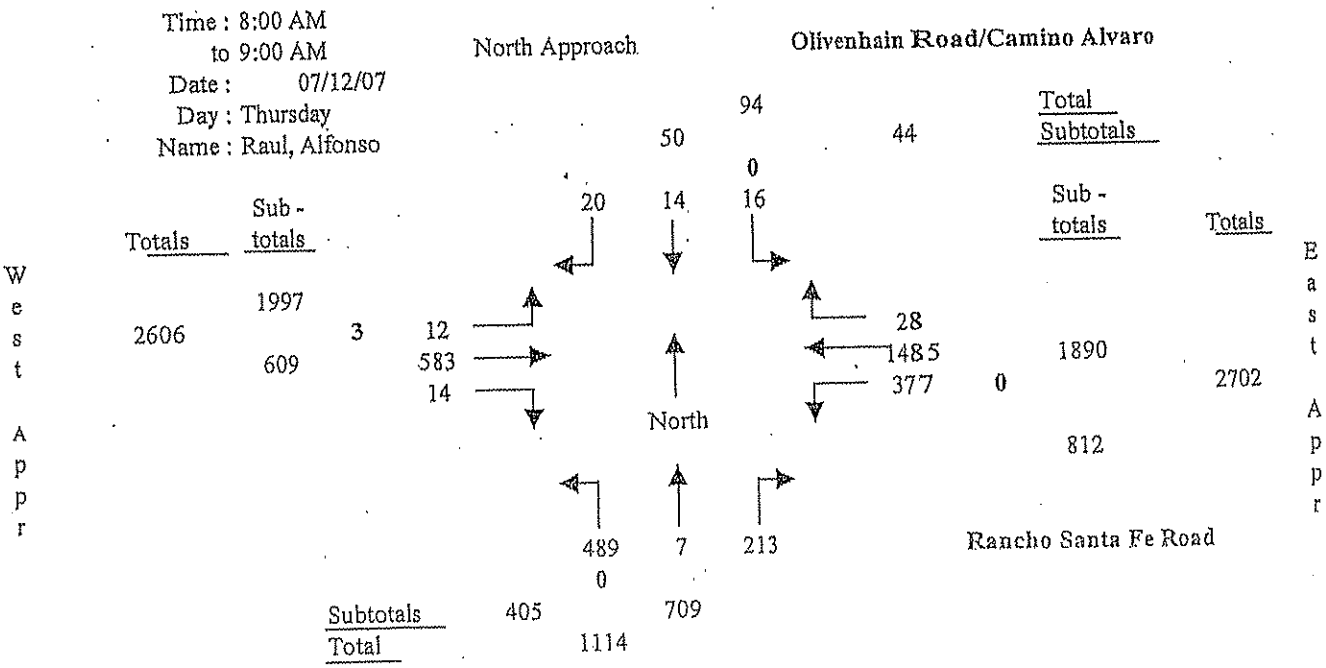

Note : Left-turn volumes include U-turns. U-turns in bold.

See attached Revised ICU

16-P EXIST.

Olivenhain Road/Camino Alvaro at Rancho Santa Fe Road

Lane Configuration for Intersection Capacity Utilization

Pk. Hr. Time Period : 5:00 PM to 6:00 PM		South Appr (NB)			North Appr (SB)			West Appr (EB)			East Appr (WB)		
		Left	Thru	Right	Left	Thru	Right	Left	Thru	Right	Left	Thru	Right
Lane Config - urations	Inside (left) 1	1	1		1	1	1	1			1		
	2								1			1	
	3								1	1		1	
	4												1
	5												
	6												
	Outside 7												
	Free-flow			1									
Lane Settings		0	1	0	0	1	0	1	2	0	1	2	1
Capacity		0	2000	0	0	2000	0	1800	4000	0	1800	4000	1800
Are the North/South phases split (Y/N)?				N									
Are the East/West phases split (Y/N)?				N									
Efficiency Lost Factor		0.10											
Hourly Volume		385	10	525	18	11	18	6	1439	13	266	974	31
Adjusted Hourly Volume		0	395	0	0	47	0	6	1452	0	266	974	31
Utilization Factor		0.00	0.20	0.00	0.00	0.02	0.00	0.00	0.36	0.00	0.15	0.24	0.02
Critical Factors			0.20		0.00				0.36		0.15		

ICU Ratio = 0.81 LOS = D

USE THESE COUNTS/USE REVISED LANES

Turning Movements at Intersection of : **Olivenhain Road/Camino Alvaro and Rancho Santa Fe Road**

Time : 5:00 PM to 6:00 PM
Date : 07/12/07
Day : Thursday
Name : Raul, Alfonso

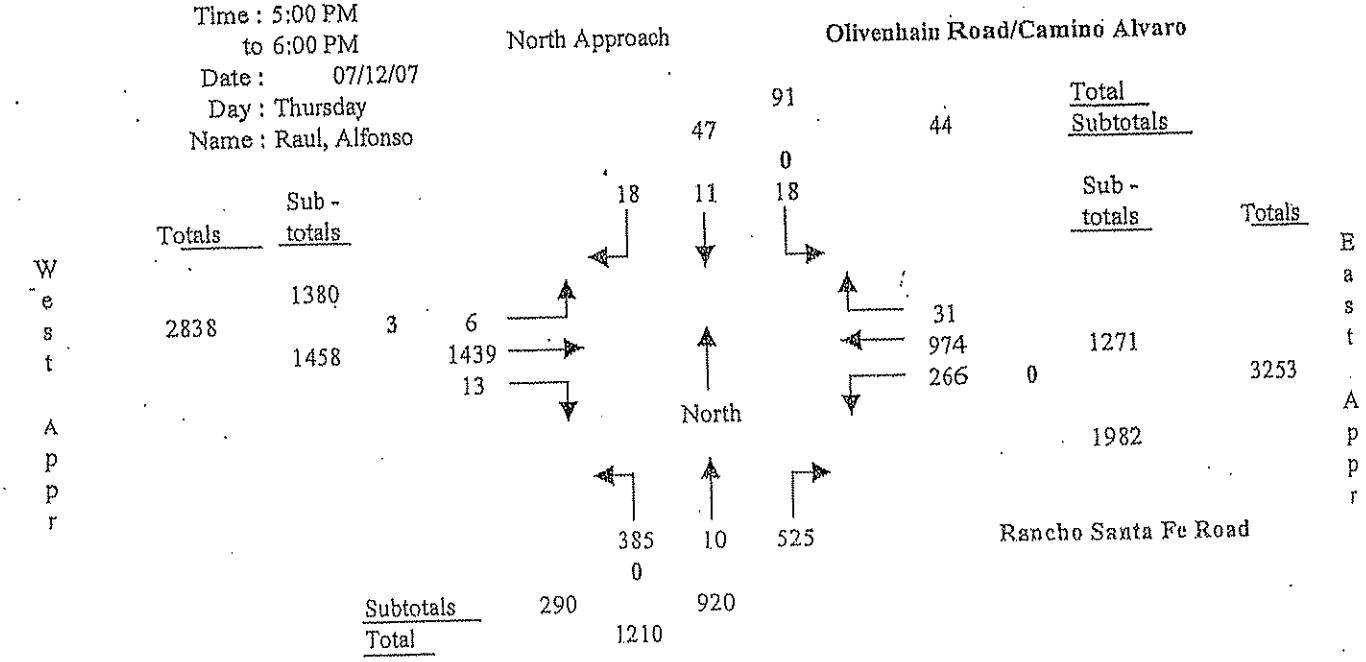

Note : Left-turn volumes include U-turns. U-turns in bold.

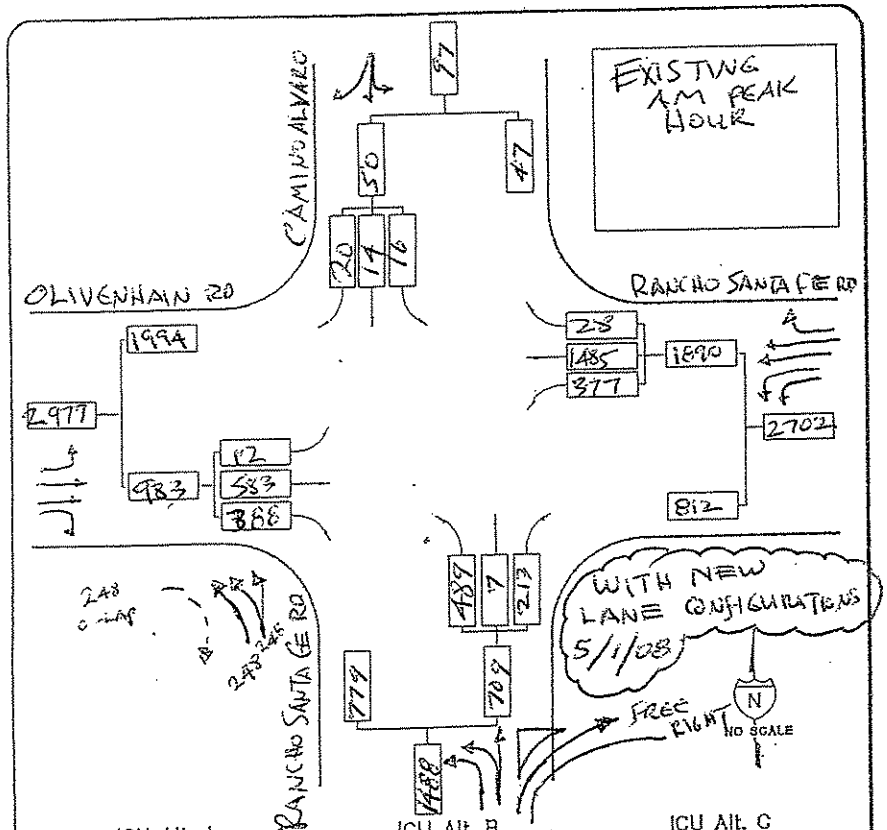

ICU Alt. A MOVE	CAPACITY	ICU	ICU Alt. B MOVE	CAPACITY	ICU	ICU Alt. C MOVE	CAPACITY	ICU
	583/4000	0.15		1485/4000	0.37			
	377/3600	0.10		12/1800	0.01			
	50/1800	0.03			.03			
	496/3600	0.14			0.14			
LOST TIME +		0.10			0.10			
		0.52			0.65			

L.O.S. ____ No mitigation — LOS A

L.O.S. ____ Mitigation

LOS B — L.O.S. ____ Mitigation

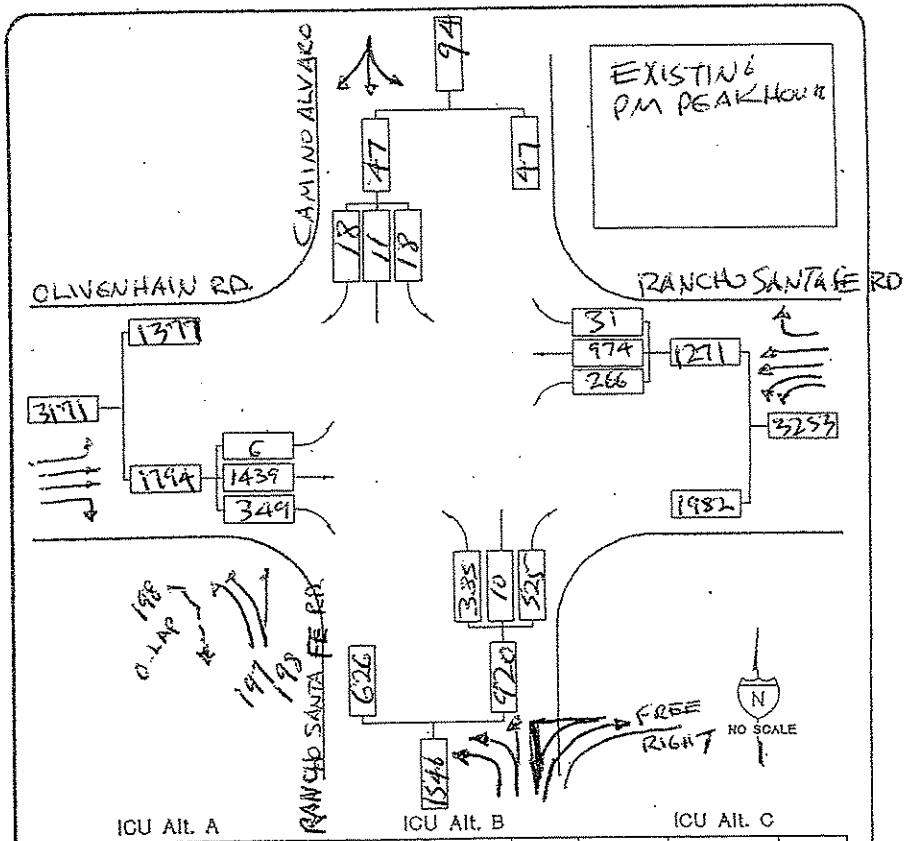

ICU Alt. A MOVE	CAPACITY	ICU	ICU Alt. B MOVE	CAPACITY	ICU	ICU Alt. C MOVE	CAPACITY	ICU
	1439/4000	0.36						
	266/3600	0.07						
	47/1800	0.03						
	395/3600	0.11						
		+0.10						
		0.67						

L.O.S. ____ No mitigation — LOS B

L.O.S. ____ Mitigation

L.O.S. ____ Mitigation

PAGE OF

16 A+P EXISTING

JLS

URBAN SYSTEMS 6/12/08

18-A
EXIST.

El Camino Real at Alga Road/Aviara Parkway

Lane Configuration for Intersection Capacity Utilization

Pk. Hr. Time Period : 7:45 AM to 8:45 AM		South Appr (NB)			North Appr (SB)			West Appr (EB)			East Appr (WB)		
		Left	Thru	Right	Left	Thru	Right	Left	Thru	Right	Left	Thru	Right
Lane Config - urations	Inside (left) 1	1			1			1			1		
	2	1			1			1			1		
	3		1			1			1			1	
	4		1			1			1			1	1
	5		1			1	1			1			
	6			1									
	Outside Free-flow 7												
Lane Settings		2	3	1	2	3	0	2	2	1	2	2	0
Capacity		3600	6000	1800	3600	6000	0	3600	4000	1800	3600	4000	0
Are the North/South phases split (Y/N)?				N									
Are the East/West phases split (Y/N)?				N									
Efficiency Lost Factor		0.10											
Hourly Volume		153	899	242	74	1077	61	78	177	396	719	369	108
Adjusted Hourly Volume		153	899	242	74	1138	0	78	177	396	719	477	0
Utilization Factor		0.04	0.15	0.13	0.02	0.19	0.00	0.02	0.04	0.22	0.20	0.12	0.00
Critical Factors		0.04				0.19				0.22	0.20		

ICU Ratio = 0.75 LOS = C

Turning Movements at Intersection of : **El Camino Real and Alga Road/Aviara Parkway**

Time : 7:45 AM
to 8:45 AM
Date : 08/09/07
Day : Thursday
Name : Raul, Alfonso

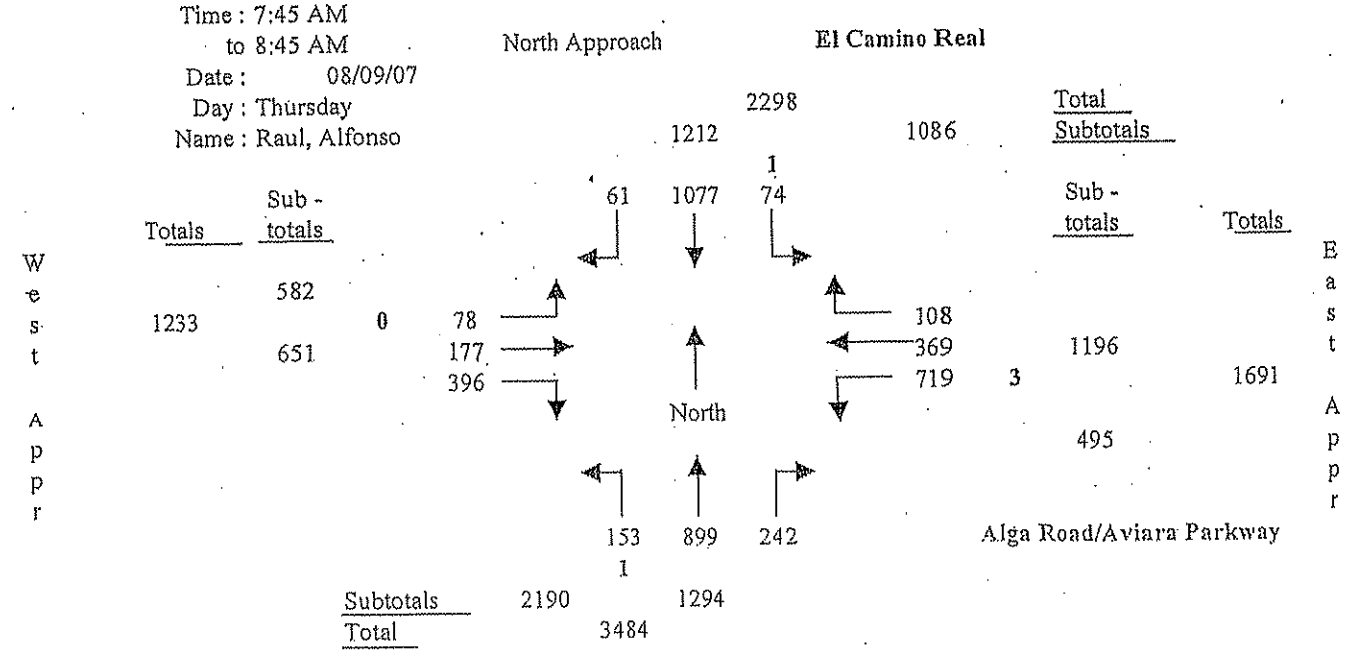

Note : Left-turn volumes include U-turns. U-turns in bold.

18-P
EXIST.

El Camino Real at Alga Road/Aviara Parkway

Lane Configuration for Intersection Capacity Utilization

Pk. Hr. Time Period : 4:45 PM to 5:45 PM		South Appr (NB)			North Appr (SB)			West Appr (EB)			East Appr (WB)		
		Left	Thru	Right	Left	Thru	Right	Left	Thru	Right	Left	Thru	Right
Lane Config - urations	Inside (left) 1	1			1			1			1		
	2	1			1			1			1		
	3		1			1			1			1	
	4		1			1			1			1	1
	5		1			1	1			1			
	6			1									
	Outside 7												
	Free-flow												
Lane Settings		2	3	1	2	3	0	2	2	1	2	2	0
Capacity		3600	6000	1800	3600	6000	0	3600	4000	1800	3600	4000	0
Are the North/South phases split (Y/N)?				N									
Are the East/West phases split (Y/N)?				N									
Efficiency Lost Factor		0.10											
Hourly Volume		438	1056	680	203	1321	104	121	492	472	508	398	58
Adjusted Hourly Volume		438	1056	172	203	1425	0	121	492	34	508	456	0
Utilization Factor		0.12	0.18	0.10	0.06	0.24	0.00	0.03	0.12	0.02	0.14	0.11	0.00
Critical Factors		0.12				0.24			0.12		0.14		

ICU Ratio = 0.72 LOS = C

Turning Movements at Intersection of : **El Camino Real and Alga Road/Aviara Parkway**

Time : 4:45 PM
to 5:45 PM
Date : 08/09/07
Day : Thursday
Name : Raul, Alfonso

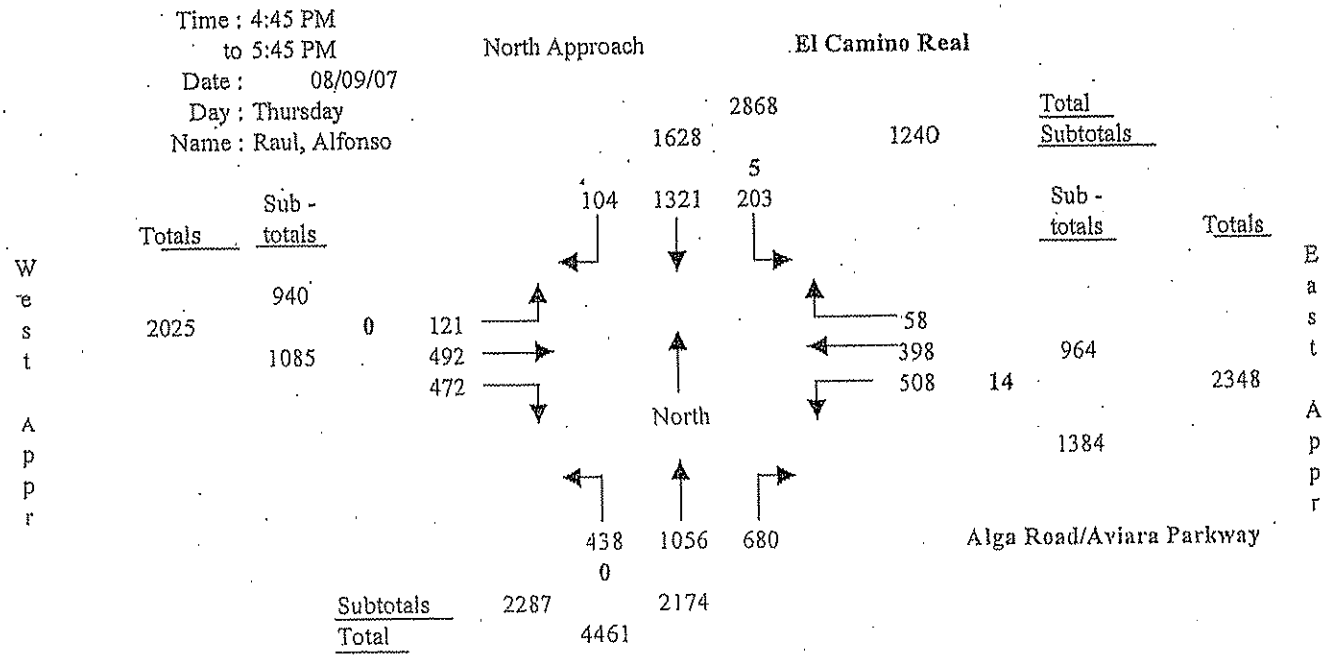

Note : Left-turn volumes include U-turns. U-turns in bold.

Intersection Capacity Utilization (ICU) Worksheet

INTERSECTION CAPACITY UTILIZATION

INTERSECTION: El Camino Real (N/S) Costa Del Mar Rd (E/W)
SCENARIO : Existing
COUNT DATE: Th. 1/12/06 PEAK HR: AM
ANALYST : MTM AGENCY : Willdan

MOVEMENT	# OF LANES	CAPACITY	AM PEAK HOUR	UNADJUSTED VOLUME	AM PEAK V/C	
NB Left	0	0	0		0.00	*
NB Thru +RT.	3	6,000	1,342 +218		0.22 .26	
NB Right	—	—	218		—	
SB Left	1	1,800	79		0.04	
SB Thru	2	4,000	1,919		0.48	*
SB Right	0	0	0		0	
EB Left	0	0	0		0.00	
EB Thru	0	0	0		0	*
EB Right	0	0	0		0	
WB Left	2	3,600	71		0.02	*
WB Thru	0	0	0		0	
WB Right	1	1,800	6		0.00	
NORTH/SOUTH CRITICAL SUMS					0.48	
EAST/WEST CRITICAL SUMS					0.02	
SUM OF CRITICAL V/C RATIO					0.50	
ADJUSTMENT FOR LOST TIME					0.10	
INTERSECTION CAPACITY UTILIZATION (ICU)					**0.60**	
LEVEL OF SERVICE (LOS)					**A**	

NOTES:

* Denotes Critical Movements
** Extra wide outside lane

LOS	Maximum V/C
A	≤ 0.60
B	≤ 0.70
C	≤ 0.80
D	≤ 0.90
E	≤ 1.00
F	>1.00

INTERSECTION CAPACITY UTILIZATION

INTERSECTION: El Camino Real (N/S) Costa Del Mar Rd (E/W)
SCENARIO : Existing
COUNT DATE: 1/12/06 PEAK HR: PM
ANALYST : MTM AGENCY : Willdan

MOVEMENT	# OF LANES	CAPACITY	PM PEAK HOUR	UNADJUSTED VOLUME	PM PEAK V/C	
NB Left	0	0	0		0.00	*
NB Thru +RT	3	6,000	2,091 +49		0.35 .36	
NB Right	—	—	49		—	
SB Left	1	1,800	13		0.01	
SB Thru	2	4,000	2,049		0.51	*
SB Right	0	0	0		0	
EB Left	0	0	0		0.00	
EB Thru	0	0	0		0	*
EB Right	0	0	0		0	
WB Left	2	3,600	116		0.03	*
WB Thru	0	0	0		0	
WB Right	1	1,800	60		0.03	
NORTH/SOUTH CRITICAL SUMS					0.51	
EAST/WEST CRITICAL SUMS					0.03	
SUM OF CRITICAL V/C RATIO					0.54	
ADJUSTMENT FOR LOST TIME					0.10	
INTERSECTION CAPACITY UTILIZATION (ICU)					**0.64**	
LEVEL OF SERVICE (LOS)					**B**	

NOTES:

* Denotes Critical Movements
** Extra wide outside lane

LOS	Maximum V/C
A	≤ 0.60
B	≤ 0.70
C	≤ 0.80
D	≤ 0.90
E	≤ 1.00
F	>1.00

19 A to EX

PRIORITY ENGINEERING, INC.

INTERSECTION TURNING MOVEMENTS REDUCTION SHEET

ION: El Camino Real and Costa Del Mar
Carlsbad, CA

DATE OF COUNT: Thu. 1/12/06
TIME OF COUNT: PM Peak

COUNTED BY: JR
WEATHER: Clear

TIME INTERVAL ENDING AT	FROM NORTH ON (SB) El Camino Real				FROM SOUTH ON (NB) El Camino Real				FROM EAST ON (WB) Costa Del Mar				FROM WEST ON (EB) N/A				INTERVAL TOTALS
	Right	Thru	Left	Peds	Right	Thru	Left	Peds	Right	Thru	Left	Peds	Right	Thru	Left	Peds	
04:15 PM	0	453	8	0	21	486	0	0	5	0	26	0	0	0	0	0	999
04:30 PM	0	445	13	0	13	448	0	0	13	0	26	0	0	0	0	0	959
04:45 PM	0	409	15	0	25	430	0	0	16	0	46	0	0	0	0	0	941
05:00 PM	0	475	2	0	18	566	0	0	23	0	30	0	0	0	0	0	1114
05:15 PM	0	465	4	0	9	475	0	0	14	0	34	0	0	0	0	0	1005
05:30 PM	0	607	4	0	14	522	0	0	8	0	24	0	0	0	0	0	1179
05:45 PM	0	502	3	0	8	524	0	0	15	0	28	0	0	0	0	0	1080
06:00 PM	0	497	4	0	9	480	0	0	9	0	24	0	0	0	0	0	1023
PEAK HOUR TOTALS	0	2049	13	0	49	2091	0	0	60	0	116	0	0	0	0	0	INTERSECTION
ALL MOVEMENTS	2062				2140				176				0				4378
PEAK HOUR FACTOR	0.84				0.92				0.83				#DIV/0!				0.93

: Pedestrians Across Intersection Leg
Peak Hour Factor

PM PEAK HOUR: 4:45 PM TO 5:45 PM

:ED BY: JR

DATE OF REDUCTION: 1/5/2006

PRIORITY ENGINEERING, INC.

INTERSECTION TURNING MOVEMENTS REDUCTION SHEET

TURNING MOVEMENTS DIAGRAM

PM PEAK HOUR ENDING AT 5:45 PM

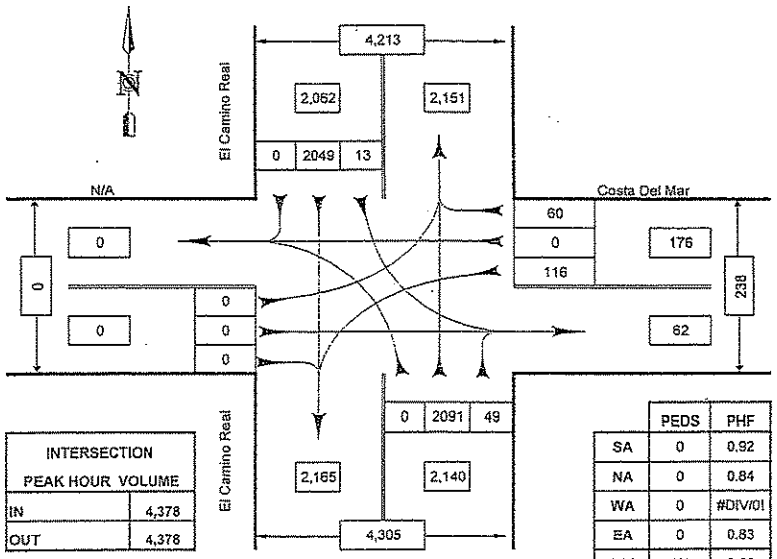

INTERSECTION PEAK HOUR VOLUME	
IN	4,378
OUT	4,378

	PEDS	PHF
SA	0	0.92
NA	0	0.84
WA	0	#DIV/0!
EA	0	0.83
INT	0%	0.93

PEDS = Pedestrians
PHF = Peak Hour Factor

El Camino Real and Costa Del Mar

Carlsbad, CA

COUNTED BY: JR
REDUCED BY: JR
DATE: 1/5/2006

DATE OF COUNT: 1/12/06
TIME OF COUNT: PM Peak
WEATHER: Clear

Exhibit D

20-A
EXIST.

I-5 Southbound Ramps at La Costa Avenue

Lane Configuration for Intersection Capacity Utilization

Pk. Hr. Time Period : 7:45 AM to 8:45 AM

		South Appr (NB)			North Appr (SB)			West Appr (EB)			East Appr (WB)		
		Left	Thru	Right	Left	Thru	Right	Left	Thru	Right	Left	Thru	Right
Lane Config - urations	Inside (left) 1				1				1		1		
	2				1	1			1	1	1		
	3						1					1	
	4											1	
	5												
	6												
	Outside 7												
	Free-flow												
Lane Settings		0	0	0	2	0	1	0	2	0	2	2	0
Capacity		0	0	0	3800	0	1800	0	4000	0	3600	4000	0
Are the North/South phases split (Y/N)?				N									
Are the East/West phases split (Y/N)?				N									
Efficiency Lost Factor		0.10											
Hourly Volume		0	0	0	712	13	506	0	441	38	215	353	0
Adjusted Hourly Volume		0	0	0	725	0	506	0	479	0	215	353	0
Utilization Factor		0.00	0.00	0.00	0.19	0.00	0.28	0.00	0.12	0.00	0.06	0.09	0.00
Critical Factors		0.00					0.28		0.12		0.06		

ICU Ratio = 0.56 LOS = A

Turning Movements at Intersection of : **I-5 Southbound Ramps and La Costa Avenue**

Time : 7:45 AM
to 8:45 AM
Date : 07/17/07
Day : Tuesday
Name : Stephen, Jason

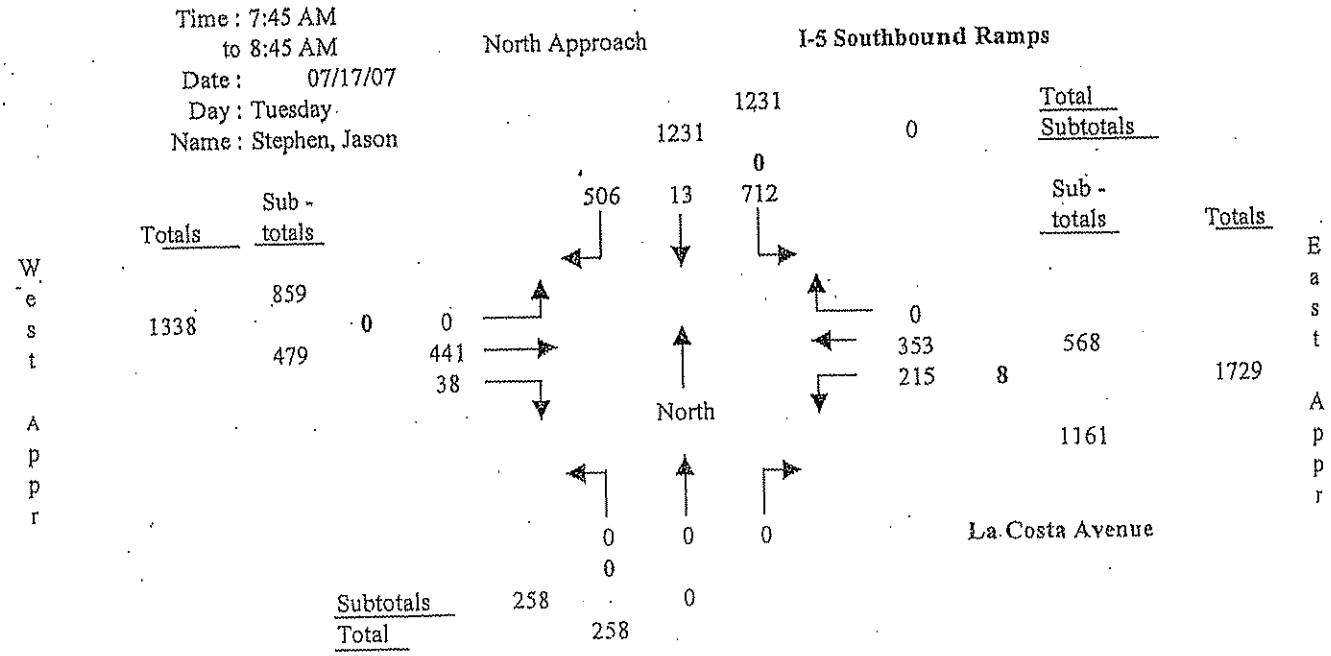

Note : Left-turn volumes include U-turns. U-turns in bold.

20-P
EXIST.

I-5 Southbound Ramps at La Costa Avenue

Lane Configuration for Intersection Capacity Utilization

Pk. Hr. Time Period : 3:30 PM to 4:30 PM		South Appr (NB)			North Appr (SB)			West Appr (EB)			East Appr (WB)		
		Left	Thru	Right	Left	Thru	Right	Left	Thru	Right	Left	Thru	Right
Lane Config - urations	Inside (left) 1				1				1		1		
	2				1	1			1	1	1		
	3						1					1	
	4											1	
	5												
	6												
	Outside 7												
	Free-flow												
Lane Settings		0	1	0	2	0	1	0	2	0	2	2	0
Capacity		0	2000	0	3800	0	1800	0	4000	0	3600	4000	0
Are the North/South phases split (Y/N)?				N									
Are the East/West phases split (Y/N)?				N									
Efficiency Lost Factor		0.10											
Hourly Volume		0	0	0	495	16	303	0	588	59	397	408	0
Adjusted Hourly Volume		0	0	0	511	0	303	0	647	0	397	408	0
Utilization Factor		0.00	0.00	0.00	0.13	0.00	0.17	0.00	0.16	0.00	0.11	0.10	0.00
Critical Factors		0.00					0.17		0.16		0.11		

ICU Ratio = 0.54 LOS = A

Turning Movements at Intersection of : **I-5 Southbound Ramps and La Costa Avenue**

Time : 3:30 PM
to 4:30 PM
Date : 07/17/07
Day : Tuesday
Name : Stephen, Jason

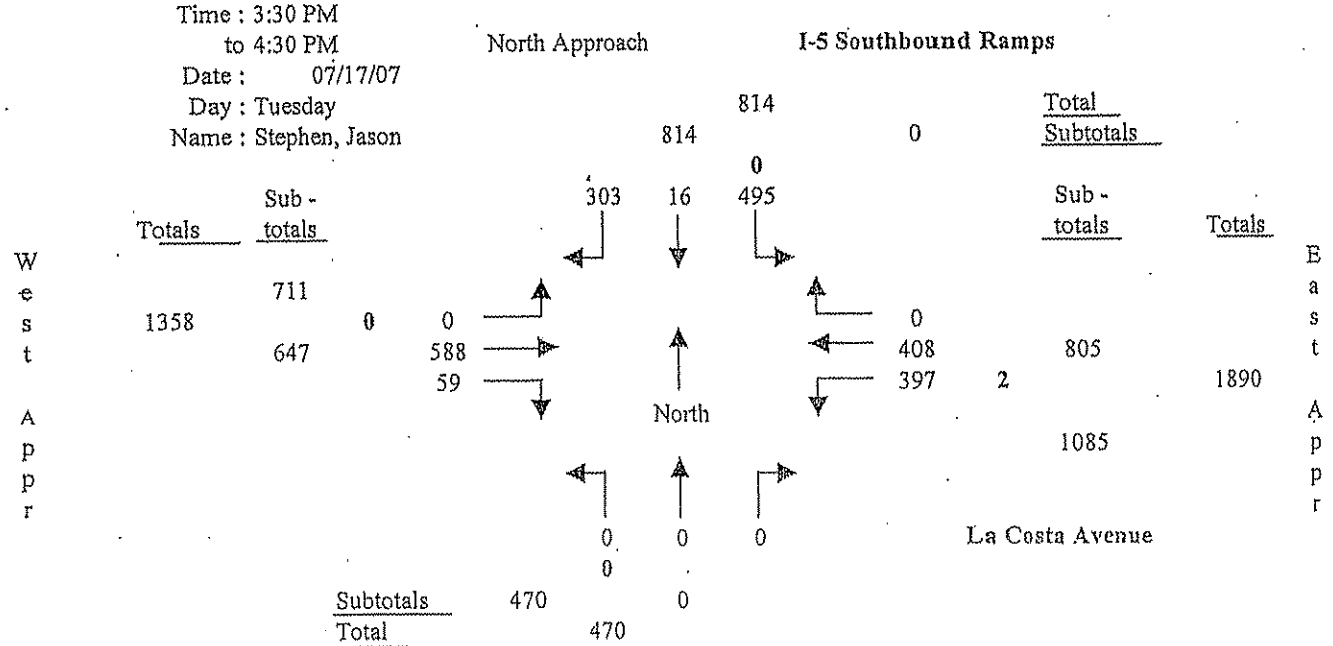

Note : Left-turn volumes include U-turns. U-turns in bold.

21-A

EXIST.

I-5 Northbound Ramps at La Costa Avenue

Lane Configuration for Intersection Capacity Utilization

Pk. Hr. Time Period : 7:30 AM to 8:30 AM			South Appr (NB)			North Appr (SB)			West Appr (EB)			East Appr (WB)		
			Left	Thru	Right	Left	Thru	Right	Left	Thru	Right	Left	Thru	Right
Lane Config - urations	Inside (left)	1	1	1					1				1	
		2			1					1			1	
		3			1					1			1	
		4												1
		5												
		6												
	Outside Free-flow	7												
Lane Settings			0	1	2	0	0	0	1	2	0	0	3	1
Capacity			0	2000	3600	0	0	0	1800	4000	0	0	6000	1800
Are the North/South phases split (Y/N)?					N									
Are the East/West phases split (Y/N)?					N									
Efficiency Lost Factor			0.10											
Hourly Volume			67	2	608	0	0	0	179	1022	0	0	615	505
Adjusted Hourly Volume			0	69	608	0	0	0	179	1022	0	0	615	505
Utilization Factor			0.00	0.03	0.17	0.00	0.00	0.00	0.10	0.26	0.00	0.00	0.10	0.28
Critical Factors					0.17	0.00			0.10					0.28

ICU Ratio = 0.65 LOS = B

Turning Movements at Intersection of : **I-5 Northbound Ramps and La Costa Avenue**

Time : 7:30 AM
to 8:30 AM
Date : 07/17/07
Day : Tuesday
Name : Raul, Alfonso

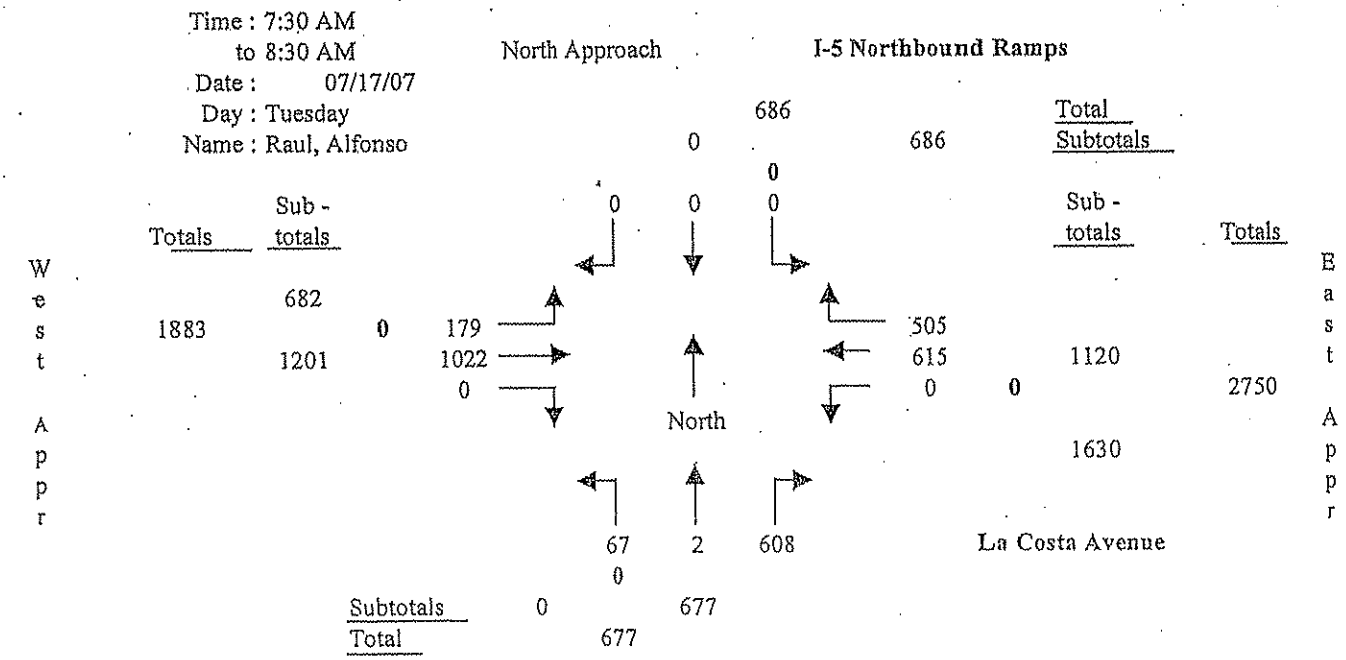

Note : Left-turn volumes include U-turns. U-turns in bold.

21-P
EXIST.

I-5 Northbound Ramps at La Costa Avenue

Lane Configuration for Intersection Capacity Utilization

Pk. Hr. Time Period : 5:15 PM to 6:15 PM		South Appr (NB)			North Appr (SB)			West Appr (EB)			East Appr (WB)		
		Left	Thru	Right	Left	Thru	Right	Left	Thru	Right	Left	Thru	Right
Lane Config - urations	Inside (left) 1	1	1					1				1	
	2			1					1			1	
	3			1					1			1	
	4												1
	5												
	6												
	Outside Free-flow 7												
Lane Settings		0	1	2	0	0	0	1	2	0	0	3	1
Capacity		0	2000	3600	0	0	0	1800	4000	0	0	6000	1800
Are the North/South phases split (Y/N)?				N									
Are the East/West phases split (Y/N)?				N									
Efficiency Lost Factor		0.10											
Hourly Volume		172	2	792	0	0	0	196	789	0	0	753	392
Adjusted Hourly Volume		0	174	792	0	0	0	196	789	0	0	753	392
Utilization Factor		0.00	0.09	0.22	0.00	0.00	0.00	0.11	0.20	0.00	0.00	0.13	0.22
Critical Factors				0.22	0.00			0.11					0.22

ICU Ratio = 0.65 LOS = B

Turning Movements at Intersection of : **I-5 Northbound Ramps and La Costa Avenue**

Time : 5:15 PM
to 6:15 PM
Date : 07/17/07
Day : Tuesday
Name : Raul, Alfonso

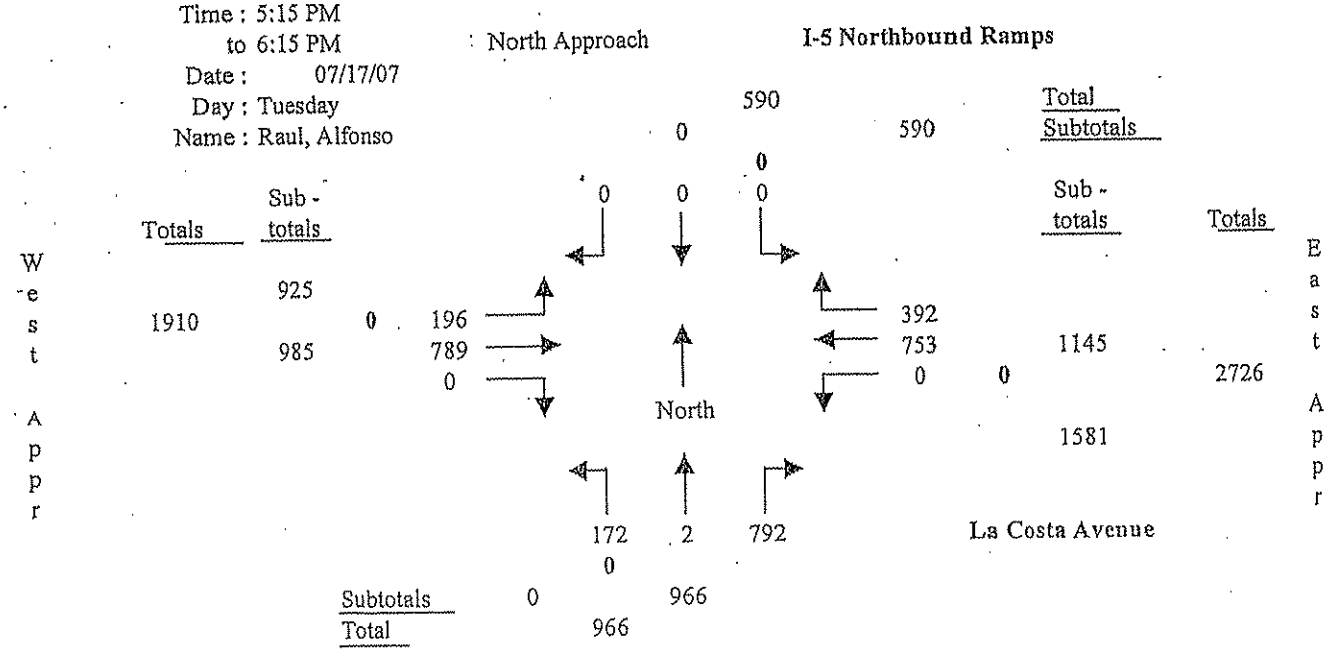

Note : Left-turn volumes include U-turns. U-turns in bold.

Intersection Capacity Utilization (ICU) Worksheet

INTERSECTION CAPACITY UTILIZATION

INTERSECTION: Piraeus Ave (N/S) La Costa Ave (E/W)
SCENARIO : Existing
COUNT DATE: 01-05-06 PEAK HR: AM
ANALYST : MTM AGENCY : Willdan

MOVEMENT	# OF LANES	CAPACITY	AM PEAK HOUR	UNADJUSTED VOLUME	AM PEAK V/C	
NB Left	1	1,800	109		0.06	*
NB Thru	0	0	0		0.00	
NB Right	1	1,800	62		0.03	
SB Left	0	0	0		0	
SB Thru	0	0	0		0.00	*
SB Right	0	0	0		0	
EB Left	0	0	0		0.00	
EB Thru +RT	2	4,000	1,381+97		0.39	*
EB Right	0	—	197		—	
WB Left	1	1,800	74		0.04	*
WB Thru	4	8,000	1,076		0.13	
WB Right	0	0	0		0.00	
NORTH/SOUTH CRITICAL SUMS					0.06	
EAST/WEST CRITICAL SUMS					0.43	
SUM OF CRITICAL V/C RATIO					0.49	
ADJUSTMENT FOR LOST TIME					0.10	
INTERSECTION CAPACITY UTILIZATION (ICU)					0.59	
LEVEL OF SERVICE (LOS)					A	

NOTES:

* Denotes Critical Movements
** Extra wide outside lane

LOS	Maximum V/C
A	≤0.60
B	≤0.70
C	≤0.80
D	≤0.90
E	≤1.00
F	>1.00

INTERSECTION CAPACITY UTILIZATION

INTERSECTION: Piraeus Ave (N/S) La Costa Ave (E/W)
SCENARIO : Existing
COUNT DATE: 01-05-06 PEAK HR: PM
ANALYST : MTM AGENCY : Willdan

MOVEMENT	# OF LANES	CAPACITY	PM PEAK HOUR	UNADJUSTED VOLUME	PM PEAK V/C	
NB Left	1	1,800	105		0.06	*
NB Thru	0	0	0		0.00	
NB Right	1	1,800	29		0.02	
SB Left	0	0	0		0	
SB Thru	0	0	0		0.00	*
SB Right	0	0	0		0	
EB Left	0	0	0		0.00	
EB Thru +RT	2	4,000	1,845+57		0.47	*
EB Right	0	—	52		—	
WB Left	1	1,800	80		0.04	*
WB Thru	4	8,000	1,704		0.21	
WB Right	0	0	0		0.00	
NORTH/SOUTH CRITICAL SUMS					0.06	
EAST/WEST CRITICAL SUMS					0.51	
SUM OF CRITICAL V/C RATIO					0.57	
ADJUSTMENT FOR LOST TIME					0.10	
INTERSECTION CAPACITY UTILIZATION (ICU)					0.67	
LEVEL OF SERVICE (LOS)					B	

NOTES:

* Denotes Critical Movements
** Extra wide outside lane

LOS	Maximum V/C
A	≤0.60
B	≤0.70
C	≤0.80
D	≤0.90
E	≤1.00
F	>1.00

22 AM EX

PRIORITY ENGINEERING, INC.

INTERSECTION TURNING MOVEMENTS REDUCTION SHEET

TION: La Costa Ave and Piraeus Ave
Carlsbad, CA

DATE OF COUNT: Thu. 1/5/06
TIME OF COUNT: AM Peak

COUNTED BY: MM
WEATHER: Clear

TIME INTERVAL ENDING AT	FROM NORTH ON (SB) N/A				FROM SOUTH ON (NB) Piraeus Ave				FROM EAST ON (WB) La Costa Ave				FROM WEST ON (EB) La Costa Ave				INTERVAL TOTALS
	Right	Thru	Left	Peds	Right	Thru	Left	Peds	Right	Thru	Left	Peds	Right	Thru	Left	Peds	
07:15 AM	0	0	0	0	10	0	13	0	0	346	17	0	31	421	0	0	838
07:30 AM	0	0	0	0	12	0	18	0	0	299	13	0	28	354	0	0	724
07:45 AM	0	0	0	0	16	0	36	0	0	229	21	0	49	278	0	0	629
08:00 AM	0	0	0	0	24	0	42	0	0	202	23	0	89	328	0	0	708
08:15 AM	0	0	0	0	16	0	30	0	0	233	20	0	28	258	0	0	585
08:30 AM	0	0	0	0	20	0	29	0	0	230	15	0	41	309	0	0	644
08:45 AM	0	0	0	0	28	0	35	0	0	226	17	0	34	238	0	0	578
09:00 AM	0	0	0	0	12	0	16	0	0	183	14	0	31	211	0	0	467
PEAK HOUR TOTALS	0	0	0	0	62	0	109	0	0	1076	74	0	197	1381	0	0	INTERSECTION
ALL MOVEMENTS	0				171				1150				1578				2899
PEAK HOUR FACTOR	#DIV/0!				0.65				0.79				0.87				0.86

= Pedestrians Across Intersection Leg
Peak Hour Factor

AM PEAK HOUR: 7:00 AM TO 8:00 AM

ED BY: JR

DATE OF REDUCTION: 1/6/2006

PRIORITY ENGINEERING, INC.

INTERSECTION TURNING MOVEMENTS REDUCTION SHEET

TURNING MOVEMENTS DIAGRAM

AM PEAK HOUR ENDING AT 8:00 AM

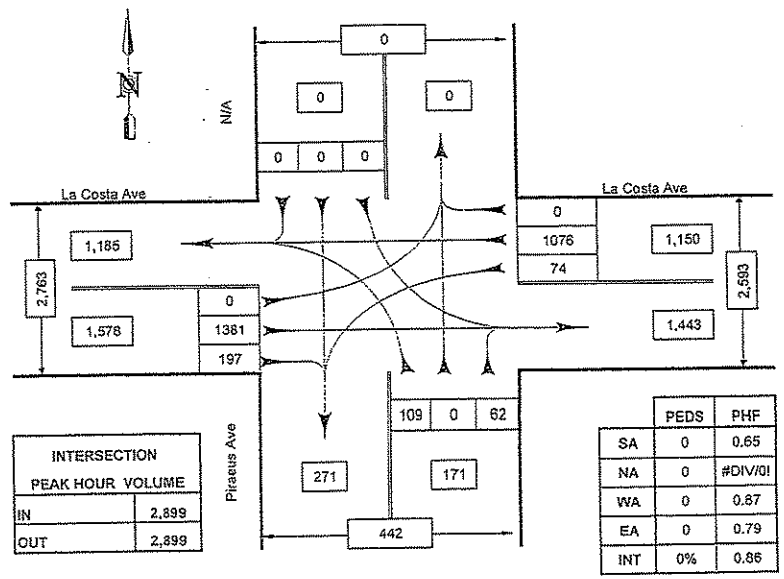

INTERSECTION PEAK HOUR VOLUME	
IN	2,899
OUT	2,899

	PEDS	PHF
SA	0	0.65
NA	0	#DIV/0!
WA	0	0.87
EA	0	0.79
INT	0%	0.86

PEDS = Pedestrians
PHF = Peak Hour Factor

La Costa Ave and Piraeus Ave

Carlsbad, CA

COUNTED BY: MM
REDUCED BY: JR
DATE: 1/6/2006

DATE OF COUNT: 1/5/06
TIME OF COUNT: AM Peak
WEATHER: Clear

EX 2-A

PRIORITY ENGINEERING, INC.

INTERSECTION TURNING MOVEMENTS REDUCTION SHEET

TION: La Costa Ave and Piraeus Ave
Carlsbad, CA

DATE OF COUNT: Thu. 1/5/06
TIME OF COUNT: PM Peak

COUNTED BY: MM
WEATHER: Clear

TIME INTERVAL ENDING AT	FROM NORTH ON (SB) N/A				FROM SOUTH ON (NB) Piraeus Ave				FROM EAST ON (WB) La Costa Ave				FROM WEST ON (EB) La Costa Ave				INTERVAL TOTALS
	Right	Thru	Left	Peds	Right	Thru	Left	Peds	Right	Thru	Left	Peds	Right	Thru	Left	Peds	
04:15 PM	0	0	0	0	12	0	39	0	0	227	10	0	11	262	0	0	561
04:30 PM	0	0	0	0	19	0	38	0	0	357	11	0	18	264	0	0	708
04:45 PM	0	0	0	0	10	0	24	0	0	298	11	0	18	259	0	0	620
05:00 PM	0	0	0	0	7	0	30	0	0	357	9	0	14	404	0	0	821
05:15 PM	0	0	0	0	8	0	27	0	0	387	9	0	10	278	0	0	719
05:30 PM	0	0	0	0	9	0	27	0	0	504	41	0	20	557	0	0	1158
05:45 PM	0	0	0	0	10	0	28	0	0	382	11	0	9	483	0	0	921
06:00 PM	0	0	0	0	2	0	25	0	0	431	19	0	13	527	0	0	1017
PEAK HOUR TOTALS	0	0	0	0	29	0	105	0	0	1704	80	0	52	1845	0	0	INTERSECTION
ALL MOVEMENTS	0				134				1784				1897				3815
PEAK HOUR FACTOR	#DIV/0!				0.93				0.82				0.82				0.82

= Pedestrians Across Intersection Leg
= Peak Hour Factor

PM PEAK HOUR: 5:00 PM TO 6:00 PM

ICED BY: JR

DATE OF REDUCTION: 1/5/2006

PRIORITY ENGINEERING, INC.

INTERSECTION TURNING MOVEMENTS REDUCTION SHEET

TURNING MOVEMENTS DIAGRAM

PM PEAK HOUR ENDING AT 6:00 PM

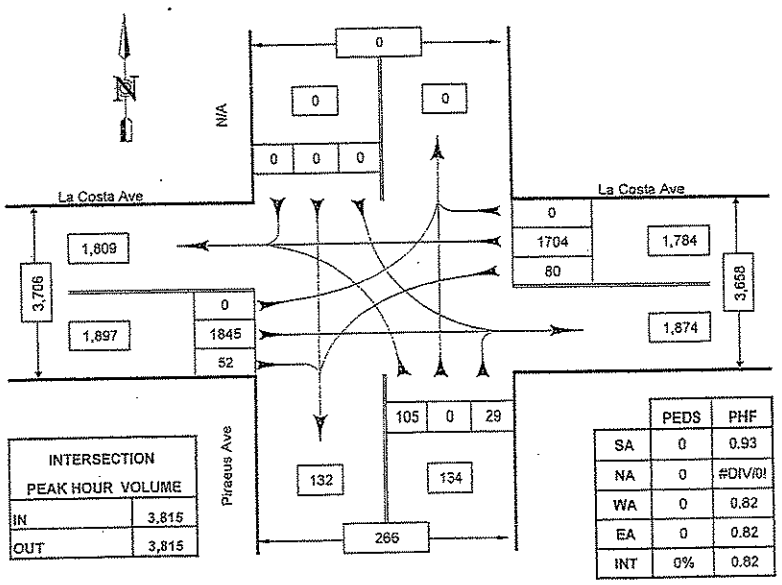

INTERSECTION PEAK HOUR VOLUME	
IN	3,815
OUT	3,815

	PEDS	PHF
SA	0	0.93
NA	0	#DIV/0!
WA	0	0.82
EA	0	0.82
INT	0%	0.82

PEDS = Pedestrians
PHF = Peak Hour Factor

La Costa Ave and Piraeus Ave

Carlsbad, CA

COUNTED BY: MM
REDUCED BY: JR
DATE: 1/5/2006

DATE OF COUNT: 1/5/06
TIME OF COUNT: PM Peak
WEATHER: Clear

22-8
EX

Intersection Capacity Utilization (ICU) Worksheet

INTERSECTION CAPACITY UTILIZATION

INTERSECTION: Saxony Rd (N/S) La Costa Ave (E/W)
SCENARIO : Existing
COUNT DATE: 01-05-06 PEAK HR: AM
ANALYST : MTM AGENCY : Willdan

MOVEMENT	# OF LANES	CAPACITY	AM PEAK HOUR	UNADJUSTED VOLUME	AM PEAK V/C	
NB Left	1	1,800	48		0.03	*
NB Thru	0	0	0		0.00	
NB Right	1	1,800	52		0.03	
SB Left	0	0	0		0	
SB Thru	0	0	0		0.00	*
SB Right	0	0	0		0	
EB Left	0	0	0		0.00	
EB Thru + RT	2	4,000	1,025 + 76		~~0.26~~ .28	*
EB Right	~~0~~	—	76		~~[illegible]~~	
WB Left	1	1,800	106		0.06	*
WB Thru	2	4,000	1,176		0.29	
WB Right	0	0	0		0.00	
NORTH/SOUTH CRITICAL SUMS					0.03	
EAST/WEST CRITICAL SUMS					~~0.32~~ .34	
SUM OF CRITICAL V/C RATIO					~~0.35~~ .37	
ADJUSTMENT FOR LOST TIME					0.10	
INTERSECTION CAPACITY UTILIZATION (ICU)					~~0.45~~ .47	
LEVEL OF SERVICE (LOS)					A	

NOTES:

LOS	Maximum V/C
A	≤ 0.60
B	≤ 0.70
C	≤ 0.80
D	≤ 0.90
E	≤ 1.00
F	>1.00

* Denotes Critical Movements
** Extra wide outside lane

INTERSECTION CAPACITY UTILIZATION

INTERSECTION: Saxony Rd (N/S) La Costa Ave (E/W)
SCENARIO : Existing
COUNT DATE: 01-05-06 PEAK HR: PM
ANALYST : MTM AGENCY : Willdan

MOVEMENT	# OF LANES	CAPACITY	PM PEAK HOUR	UNADJUSTED VOLUME	PM PEAK V/C	
NB Left	1	1,800	46		0.03	*
NB Thru	0	0	0		0.00	
NB Right	1	1,800	98		0.05	
SB Left	0	0	0		0	
SB Thru	0	0	0		0.00	*
SB Right	0	0	0		0	
EB Left	0	0	0		0.00	
EB Thru + RT	2	4,000	1,397 + 84		~~0.35~~ .37	*
EB Right	~~0~~	—	84		~~—~~	
WB Left	1	1,800	77		0.04	*
WB Thru	2	4,000	1,069		0.27	
WB Right	0	0	0		0.00	
NORTH/SOUTH CRITICAL SUMS					0.03	
EAST/WEST CRITICAL SUMS					~~0.39~~ 0.41	
SUM OF CRITICAL V/C RATIO					~~0.42~~ .44	
ADJUSTMENT FOR LOST TIME					0.10	
INTERSECTION CAPACITY UTILIZATION (ICU)					~~0.52~~ .54	
LEVEL OF SERVICE (LOS)					A	

NOTES:

LOS	Maximum V/C
A	≤ 0.60
B	≤ 0.70
C	≤ 0.80
D	≤ 0.90
E	≤ 1.00
F	>1.00

* Denotes Critical Movements
** Extra wide outside lane

23 A+P EX

PRIORITY ENGINEERING, INC.

INTERSECTION TURNING MOVEMENTS REDUCTION SHEET

ION: La Costa Ave and Saxony St
Carlsbad, CA

DATE OF COUNT: Fri. 1/6/06
TIME OF COUNT: AM Peak

COUNTED BY: JR
WEATHER: Clear

TIME INTERVAL ENDING AT	FROM NORTH ON (SB) N/A				FROM SOUTH ON (NB) Saxony St				FROM EAST ON (WB) La Costa Ave				FROM WEST ON (EB) La Costa Ave				INTERVAL TOTALS
	Right	Thru	Left	Peds	Right	Thru	Left	Peds	Right	Thru	Left	Peds	Right	Thru	Left	Peds	
07:15 AM	0	0	0	0	7	0	5	0	0	245	16	0	13	232	0	0	518
07:30 AM	0	0	0	0	10	0	13	0	0	295	15	0	14	255	0	0	603
07:45 AM	0	0	0	0	11	0	10	0	0	289	33	0	20	246	0	0	609
08:00 AM	0	0	0	0	17	0	11	0	0	310	26	0	25	299	0	0	688
08:15 AM	0	0	0	0	14	0	14	0	0	281	32	0	17	225	0	0	583
08:30 AM	0	0	0	0	22	0	8	0	0	256	30	0	17	234	0	0	567
08:45 AM	0	0	0	0	12	0	10	0	0	269	24	0	14	198	0	0	527
09:00 AM	0	0	0	0	9	0	11	0	0	229	23	0	13	253	0	0	538
PEAK HOUR TOTALS	0	0	0	0	52	0	48	0	0	1176	106	0	76	1025	0	0	INTERSECTION
ALL MOVEMENTS	0				100				1282				1101				2483
PEAK HOUR FACTOR	#DIV/0!				0.89				0.95				0.85				0.90

= Pedestrians Across Intersection Leg
Peak Hour Factor

AM PEAK HOUR: 7:15 AM TO 8:15 AM

CED BY: JR

DATE OF REDUCTION: 1/6/2006

PRIORITY ENGINEERING, INC.

INTERSECTION TURNING MOVEMENTS REDUCTION SHEET

TURNING MOVEMENTS DIAGRAM

AM PEAK HOUR ENDING AT 8:15 AM

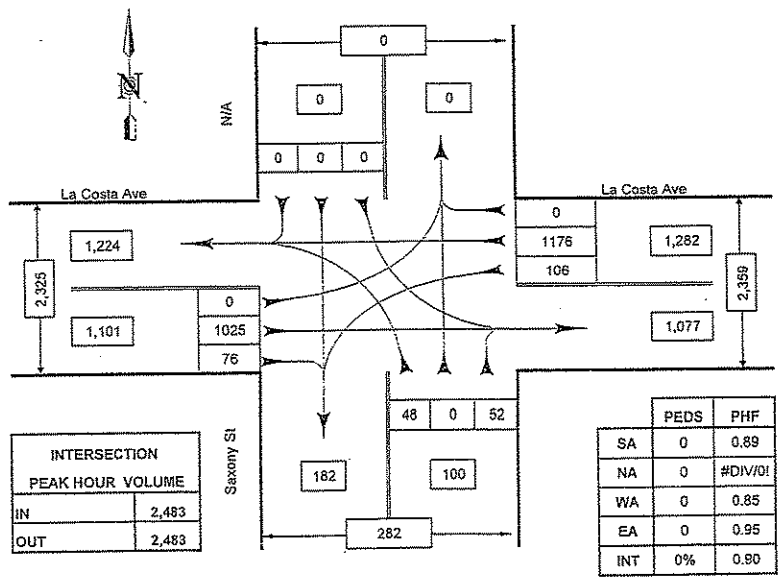

INTERSECTION PEAK HOUR VOLUME	
IN	2,483
OUT	2,483

	PEDS	PHF
SA	0	0.89
NA	0	#DIV/0!
WA	0	0.85
EA	0	0.95
INT	0%	0.90

PEDS = Pedestrians
PHF = Peak Hour Factor

La Costa Ave and Saxony St

Carlsbad, CA

COUNTED BY: JR
REDUCED BY: JR
DATE: 1/6/2006

DATE OF COUNT: 1/6/06
TIME OF COUNT: AM Peak
WEATHER: Clear

EX A-23

PRIORITY ENGINEERING, INC.

INTERSECTION TURNING MOVEMENTS REDUCTION SHEET

ION: La Costa Ave and Saxony St
Carlsbad, CA

DATE OF COUNT: Thu, 1/5/06
TIME OF COUNT: PM Peak

COUNTED BY: JR
WEATHER: Clear

TIME INTERVAL ENDING AT	FROM NORTH ON (SB) N/A				FROM SOUTH ON (NB) Saxony St				FROM EAST ON (WB) La Costa Ave				FROM WEST ON (EB) La Costa Ave				INTERVAL TOTALS
	Right	Thru	Left	Peds	Right	Thru	Left	Peds	Right	Thru	Left	Peds	Right	Thru	Left	Peds	
04:15 PM	0	0	0	0	21	0	15	0	0	282	16	0	18	284	0	0	646
04:30 PM	0	0	0	0	26	0	15	0	0	249	26	0	20	308	0	0	644
04:45 PM	0	0	0	0	33	0	10	0	0	279	22	0	36	333	0	0	713
05:00 PM	0	0	0	0	26	0	19	0	0	261	15	0	16	304	0	0	641
05:15 PM	0	0	0	0	29	0	10	0	0	281	16	0	20	340	0	0	696
05:30 PM	0	0	0	0	18	0	16	0	0	276	21	0	18	350	0	0	699
05:45 PM	0	0	0	0	30	0	15	0	0	281	20	0	25	352	0	0	723
06:00 PM	0	0	0	0	21	0	5	0	0	231	20	0	21	355	0	0	653
PEAK HOUR TOTALS	0	0	0	0	98	0	46	0	0	1059	77	0	84	1397	0	0	INTERSECTION
ALL MOVEMENTS	0				144				1146				1481				2771
PEAK HOUR FACTOR	#DIV/0!				0.80				0.95				0.98				0.96

= Pedestrians Across Intersection Leg
Peak Hour Factor

PM PEAK HOUR: 5:00 PM TO 6:00 PM

CED BY: JR

DATE OF REDUCTION: 1/5/2006

PRIORITY ENGINEERING, INC.

INTERSECTION TURNING MOVEMENTS REDUCTION SHEET

TURNING MOVEMENTS DIAGRAM
PM PEAK HOUR ENDING AT 6:00 PM

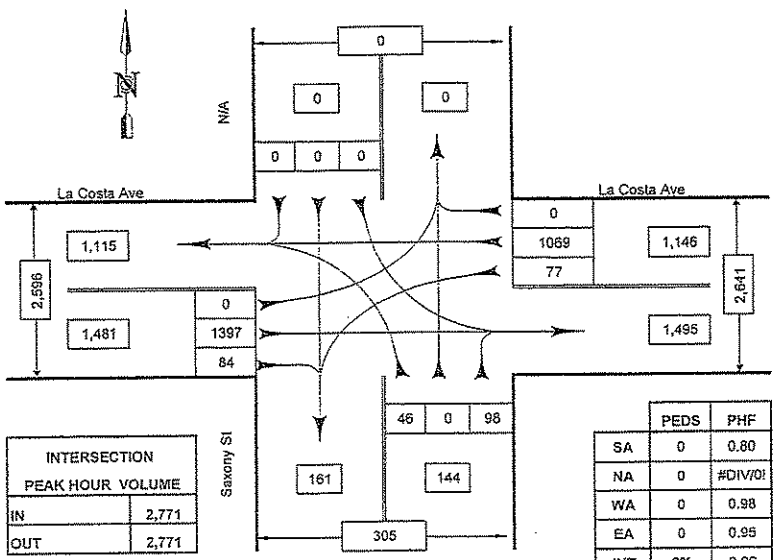

INTERSECTION PEAK HOUR VOLUME	
IN	2,771
OUT	2,771

	PEDS	PHF
SA	0	0.80
NA	0	#DIV/0!
WA	0	0.98
EA	0	0.95
INT	0%	0.96

PEDS = Pedestrians
PHF = Peak Hour Factor

La Costa Ave and Saxony St

Carlsbad, CA

COUNTED BY: JR
REDUCED BY: JR
DATE: 1/5/2006

DATE OF COUNT: 1/5/06
TIME OF COUNT: PM Peak
WEATHER: Clear

EX 2-D

24-A
EXIST.

El Camino Real at La Costa Avenue

Lane Configuration for Intersection Capacity Utilization

Pk. Hr. Time Period : 7:45 AM to 8:45 AM		South Appr (NB)			North Appr (SB)			West Appr (EB)			East Appr (WB)		
		Left	Thru	Right	Left	Thru	Right	Left	Thru	Right	Left	Thru	Right
Lane Config-urations	Inside (left) 1	1			1			1			1		
	2	1			1			1				1	
	3		1			1			1			1	
	4		1			1			1				1
	5		1	1		1				1			
	6						1						
	Outside 7												
	Free-flow												
Lane Settings		2	3	0	2	3	1	2	2	1	1	2	1
Capacity		3600	6000	0	3600	6000	1800	3600	4000	1800	1800	4000	1800
Are the North/South phases split (Y/N)?				N									
Are the East/West phases split (Y/N)?				N									
Efficiency Lost Factor		0.10											
Hourly Volume		214	655	25	55	1188	469	578	256	320	132	494	172
Adjusted Hourly Volume		214	680	0	55	1188	469	578	256	320	132	494	172
Utilization Factor		0.06	0.11	0.00	0.02	0.20	0.26	0.16	0.06	0.18	0.07	0.12	0.10
Critical Factors		0.06					0.26	0.16				0.12	

ICU Ratio = 0.70 LOS = B

Turning Movements at Intersection of : **El Camino Real and La Costa Avenue**

Time : 7:45 AM
to 8:45 AM
Date : 08/07/07
Day : Tuesday
Name : Rob, David

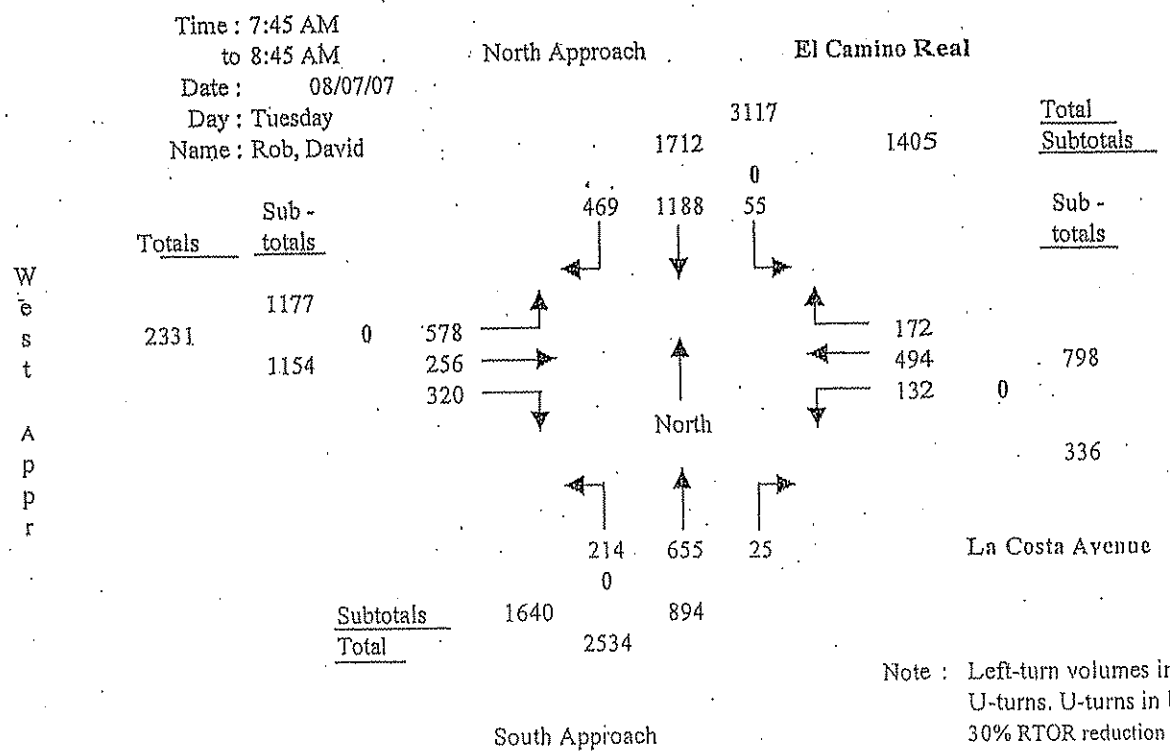

Note : Left-turn volumes include U-turns. U-turns in bold.
30% RTOR reduction used for SBRTs

24-P EXIST.

El Camino Real at La Costa Avenue

Lane Configuration for Intersection Capacity Utilization

Pk. Hr. Time Period : 5:00 PM to 6:00 PM		South Appr (NB)			North Appr (SB)			West Appr (EB)			East Appr (WB)		
		Left	Thru	Right	Left	Thru	Right	Left	Thru	Right	Left	Thru	Right
Lane Config - urations	Inside (left) 1	1			1			1			1		
	2	1			1			1				1	
	3		1			1			1			1	
	4		1			1			1				1
	5		1	1		1				1			
	6						1						
	Outside 7												
	Free-flow												
Lane Settings		2	3	0	2	3	1	2	2	1	1	2	1
Capacity		3600	6000	0	3600	6000	1800	3600	4000	1800	1800	4000	1800
Are the North/South phases split (Y/N)?				N									
Are the East/West phases split (Y/N)?				N									
Efficiency Lost Factor		0.10											
Hourly Volume		282	1200	62	192	1313	529	609	664	205	147	353	178
Adjusted Hourly Volume		282	1262	0	192	1313	529	609	664	205	147	353	178
Utilization Factor		0.08	0.21	0.00	0.05	0.22	0.29	0.17	0.17	0.11	0.08	0.09	0.10
Critical Factors		0.08					0.29	0.17					0.10

ICU Ratio = 0.74 LOS = C

Turning Movements at Intersection of : **El Camino Real and La Costa Avenue**

Time : 5:00 PM
to 6:00 PM
Date : 08/07/07
Day : Tuesday
Name : Rob, David

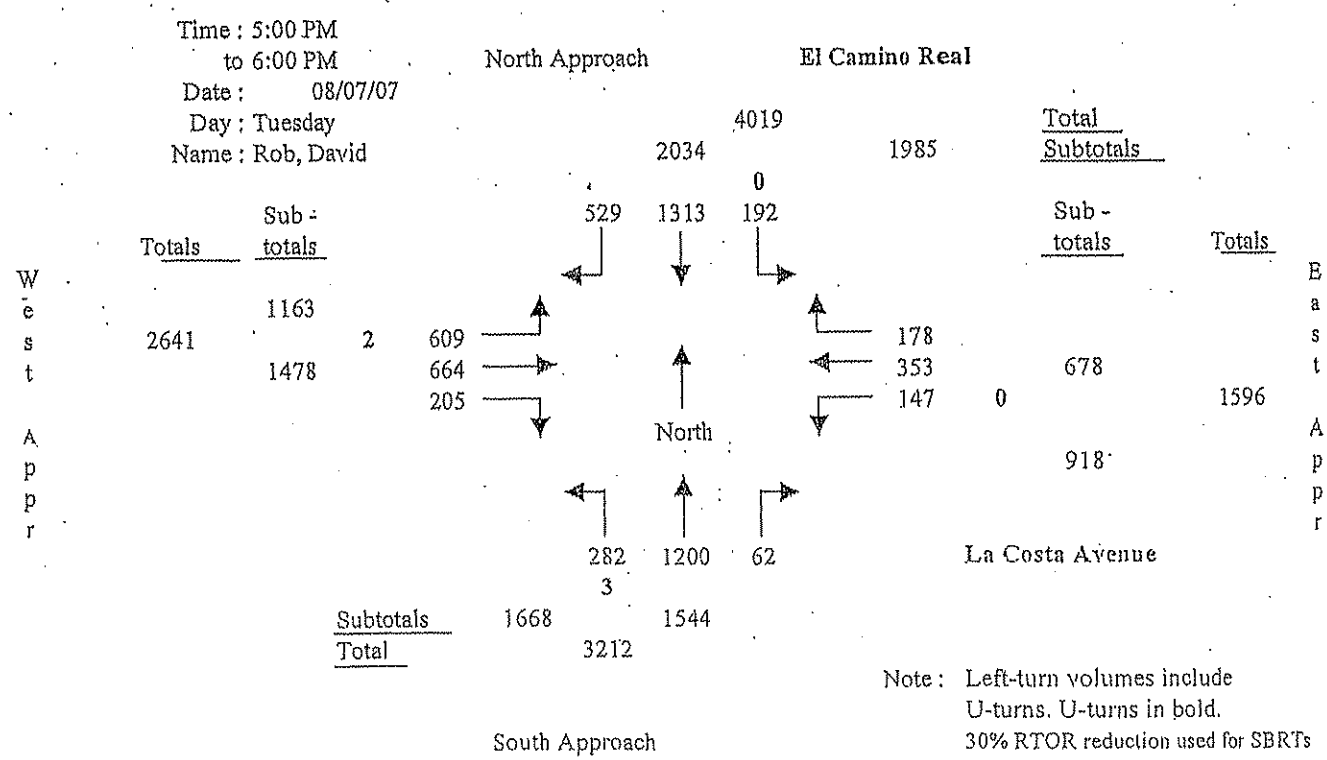

Note : Left-turn volumes include U-turns. U-turns in bold.
30% RTOR reduction used for SBRTs

Intersection Capacity Utilization (ICU) Worksheet

INTERSECTION CAPACITY UTILIZATION

INTERSECTION: Viejo Castilla Wy (N/S) La Costa Ave (E/W)
SCENARIO : Existing
COUNT DATE: 01-17-06 PEAK HR: AM
ANALYST : MTM AGENCY : Willdan

MOVEMENT	# OF LANES	CAPACITY	AM PEAK HOUR	UNADJUSTED VOLUME	AM PEAK V/C	
NB Left	0	0	0		0.00	
NB Thru	0	0	0		0.00	*
NB Right	0	0	0		0.00	
SB Left/RIGHT	1	1,800	31+115		0.02 .08	*
SB Thru	0	0	0		0.00	
SB Right	0	—	115		—	
EB Left	1	1,800	28		0.02	*
EB Thru	2	4,000	446		0.11	
EB Right	0	0	0		0	
WB Left	0	0	0		0	
WB Thru	2	4,000	736+8		0.18 .19	*
WB Right	0	—	8		—	
NORTH/SOUTH CRITICAL SUMS					0.02 .08	
EAST/WEST CRITICAL SUMS					0.20 .21	
SUM OF CRITICAL V/C RATIO					0.22 .29	
ADJUSTMENT FOR LOST TIME					0.10	
INTERSECTION CAPACITY UTILIZATION (ICU)					0.32 .39	
LEVEL OF SERVICE (LOS)					A	

NOTES:

* Denotes Critical Movements
** Extra wide outside lane

LOS	Maximum V/C
A	≤ 0.60
B	≤ 0.70
C	≤ 0.80
D	≤ 0.90
E	≤ 1.00
F	>1.00

INTERSECTION CAPACITY UTILIZATION

INTERSECTION: Viejo Castilla Wy (N/S) La Costa Ave (E/W)
SCENARIO : Existing
COUNT DATE: 01-17-06 PEAK HR: PM
ANALYST : MTM AGENCY : Willdan

MOVEMENT	# OF LANES	CAPACITY	PM PEAK HOUR	UNADJUSTED VOLUME	PM PEAK V/C	
NB Left	0	0	0		0.00	
NB Thru	0	0	0		0.00	*
NB Right	0	0	0		0.00	
SB Left/RIGHT	1	1,800	16+52		0.01 .04	*
SB Thru	0	0	0		0.00	
SB Right	0	—	52		—	
EB Left	1	1,800	132		0.07	
EB Thru	2	4,000	787		0.20	*
EB Right	0	0	0		0	
WB Left	0	0	0		0	*
WB Thru	2	4,000	442+22		0.11 .17	
WB Right	0	—	22		—	
NORTH/SOUTH CRITICAL SUMS					0.01 .04	
EAST/WEST CRITICAL SUMS					0.20	
SUM OF CRITICAL V/C RATIO					0.21 .24	
ADJUSTMENT FOR LOST TIME					0.10	
INTERSECTION CAPACITY UTILIZATION (ICU)					0.31 .34	
LEVEL OF SERVICE (LOS)					A	

NOTES:

* Denotes Critical Movements
** Extra wide outside lane

LOS	Maximum V/C
A	≤ 0.60
B	≤ 0.70
C	≤ 0.80
D	≤ 0.90
E	≤ 1.00
F	>1.00

25 Atp
EX

PRIORITY ENGINEERING, INC.

INTERSECTION TURNING MOVEMENTS REDUCTION SHEET

ATION: La Costa Ave and Viejo Castilla Wy
Carlsbad, CA

DATE OF COUNT: Tue. 1/17/06
TIME OF COUNT: AM Peak

COUNTED BY: KH
WEATHER: Clear

TIME INTERVAL ENDING AT	FROM NORTH ON (SB) Viejo Castillo Wy				FROM SOUTH ON (NB) N/A				FROM EAST ON (WB) La Costa Ave				FROM WEST ON (EB) La Costa Ave				INTERVAL TOTALS
	Right	Thru	Left	Peds	Right	Thru	Left	Peds	Right	Thru	Left	Peds	Right	Thru	Left	Peds	
07:15 AM	32	0	9	0	0	0	0	0	1	124	0	0	0	85	2	0	253
07:30 AM	34	0	1	0	0	0	0	0	1	127	0	0	0	122	4	0	289
07:45 AM	39	0	8	0	0	0	0	0	1	207	0	0	0	137	10	0	402
08:00 AM	18	0	17	0	0	0	0	0	2	211	0	0	0	95	9	0	352
08:15 AM	24	0	5	0	0	0	0	0	4	191	0	0	0	92	5	0	321
08:30 AM	17	0	3	0	0	0	0	0	1	144	0	0	0	66	4	0	235
08:45 AM	24	0	3	0	0	0	0	0	1	117	0	0	0	103	7	0	255
09:00 AM	18	0	1	0	0	0	0	0	2	139	0	0	0	81	5	0	247
PEAK HOUR TOTALS	115	0	31	0	0	0	0	0	8	736	0	0	0	446	28	0	INTERSECTION
ALL MOVEMENTS	146				0				744				474				1364
PEAK HOUR FACTOR	0.78				#DIV/0!				0.87				0.81				0.85

'S = Pedestrians Across Intersection Leg
' = Peak Hour Factor

AM PEAK HOUR: 7:15 AM TO 8:15 AM

UCED BY: JR

DATE OF REDUCTION: 1/6/2006

PRIORITY ENGINEERING, INC.

INTERSECTION TURNING MOVEMENTS REDUCTION SHEET

TURNING MOVEMENTS DIAGRAM
AM PEAK HOUR ENDING AT 8:15 AM

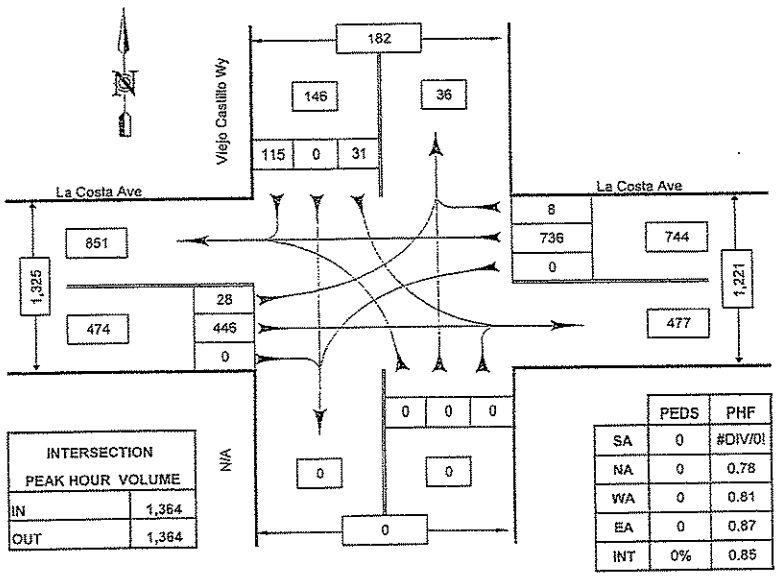

PEDS = Pedestrians
PHF = Peak Hour Factor

La Costa Ave and Viejo Castilla Wy

Carlsbad, CA

COUNTED BY: KH
REDUCED BY: JR
DATE: 1/6/2006

DATE OF COUNT: 1/17/06
TIME OF COUNT: AM Peak
WEATHER: Clear

25-A
EX

PRIORITY ENGINEERING, INC.

INTERSECTION TURNING MOVEMENTS REDUCTION SHEET

ATION: La Costa Ave and Viejo Castilla Wy
Carlsbad, CA

DATE OF COUNT: Tue, 1/17/06
TIME OF COUNT: PM Peak

COUNTED BY: KH
WEATHER: Clear

TIME INTERVAL ENDING AT	FROM NORTH ON (SB) Viejo Castilla Wy				FROM SOUTH ON (NB) N/A				FROM EAST ON (WB) La Costa Ave				FROM WEST ON (EB) La Costa Ave				INTERVAL TOTALS
	Right	Thru	Left	Peds	Right	Thru	Left	Peds	Right	Thru	Left	Peds	Right	Thru	Left	Peds	
04:15 PM	13	0	5	0	0	0	0	0	3	120	0	0	0	137	22	0	300
04:30 PM	7	0	3	0	0	0	0	0	8	117	0	0	0	140	23	0	298
04:45 PM	13	0	4	0	0	0	0	0	3	107	0	0	0	190	22	0	339
05:00 PM	8	0	3	0	0	0	0	0	1	113	0	0	0	186	18	0	329
05:15 PM	11	0	5	0	0	0	0	0	5	115	0	0	0	191	35	0	362
05:30 PM	12	0	0	0	0	0	0	0	5	122	0	0	0	197	33	0	369
05:45 PM	14	0	6	0	0	0	0	0	5	106	0	0	0	208	42	0	381
06:00 PM	15	0	5	0	0	0	0	0	7	99	0	0	0	191	22	0	339
PEAK HOUR TOTALS	52	0	16	0	0	0	0	0	22	442	0	0	0	787	132	0	INTERSECTION
ALL MOVEMENTS	68				0				464				919				1451
PEAK HOUR FACTOR	0.85				#DIV/0!				0.91				0.92				0.95

S = Pedestrians Across Intersection Leg
= Peak Hour Factor

PM PEAK HOUR: 5:00 PM TO 6:00 PM

UCED BY: JR

DATE OF REDUCTION: 1/5/2006

PRIORITY ENGINEERING, INC.

INTERSECTION TURNING MOVEMENTS REDUCTION SHEET

TURNING MOVEMENTS DIAGRAM

PM PEAK HOUR ENDING AT 6:00 PM

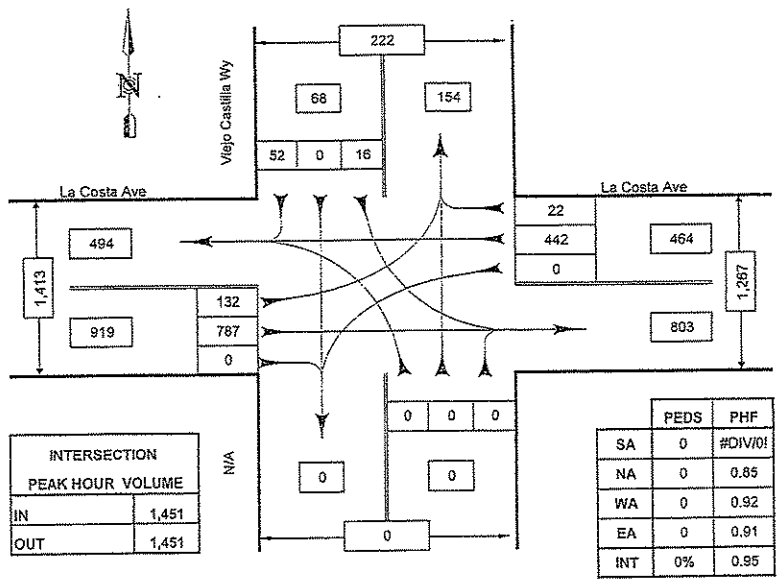

INTERSECTION PEAK HOUR VOLUME	
IN	1,451
OUT	1,451

	PEDS	PHF
SA	0	#DIV/0!
NA	0	0.85
WA	0	0.92
EA	0	0.91
INT	0%	0.95

PEDS = Pedestrians
PHF = Peak Hour Factor

La Costa Ave and Viejo Castilla Wy

Carlsbad, CA

COUNTED BY: KH

REDUCED BY: JR

DATE: 1/5/2006

DATE OF COUNT: 1/17/06

TIME OF COUNT: PM Peak

WEATHER: Clear

25-A
Ex

Intersection Capacity Utilization (ICU) Worksheet

INTERSECTION CAPACITY UTILIZATION

INTERSECTION: Romeria St (N/S) La Costa Ave (E/W)
SCENARIO : Existing
COUNT DATE: 01-12-06 PEAK HR: AM
ANALYST : MTM AGENCY : Willdan

MOVEMENT	# OF LANES	CAPACITY	AM PEAK HOUR	UNADJUSTED VOLUME	AM PEAK V/C	
NB Left	0	—	102		—	
NB Thru	0	—	10		—	
NB Right/Thru/LT	1	1,800	15+10+102		0.01 .01	*
SB Left	0	—	15		—	
SB Thru	0	—	7		—	
SB Right/Thru/LT	1	1,800	8+7+15		0.00 .02	*
EB Left	1	1,800	13		0.01	
EB Thru	1	2,000	378		0.19	* *
EB Right	1	1,800	36		0.02	
WB Left	1	1,800	24		0.01	* *
WB Thru +RT	2	4,000	577+7		0.14 .15	
WB Right	0	—	7		—	
NORTH/SOUTH CRITICAL SUMS					0.12 .09	
EAST/WEST CRITICAL SUMS					0.20 .20	
SUM OF CRITICAL V/C RATIO					0.32 .29	
ADJUSTMENT FOR LOST TIME					0.10	
INTERSECTION CAPACITY UTILIZATION (ICU)					0.391	
LEVEL OF SERVICE (LOS)					A	

NOTES:

* Denotes Critical Movements
** Extra wide outside lane

LOS	Maximum V/C
A	≤0.60
B	≤0.70
C	≤0.80
D	≤0.90
E	≤1.00
F	>1.00

INTERSECTION CAPACITY UTILIZATION

INTERSECTION: Romeria St (N/S) La Costa Ave (E/W)
SCENARIO : Existing
COUNT DATE: 01-12-06 PEAK HR: PM
ANALYST : MTM AGENCY : Willdan

MOVEMENT	# OF LANES	CAPACITY	PM PEAK HOUR	UNADJUSTED VOLUME	PM PEAK V/C	
NB Left	0	—	32		—	
NB Thru	0	—	4		—	
NB Right/Thru/LT	1	1,800	17+4+32		0.01 .03	*
SB Left	0	—	7			
SB Thru	0	—	1		—	
SB Right/Thru/LT	1	1,800	7+1+7		0.00 .01	*
EB Left	1	1,800	8		0.00	
EB Thru	1	2,000	633		0.32	* *
EB Right	1	1,800	45		0.03	
WB Left	1	1,800	6		0.00	* *
WB Thru +RT	2	4,000	428+10		0.11	
WB Right	0	—	10		—	
NORTH/SOUTH CRITICAL SUMS					0.04	
EAST/WEST CRITICAL SUMS					0.32	
SUM OF CRITICAL V/C RATIO					0.36	
ADJUSTMENT FOR LOST TIME					0.10	
INTERSECTION CAPACITY UTILIZATION (ICU)					0.46	
LEVEL OF SERVICE (LOS)					A	

NOTES:

* Denotes Critical Movements
** Extra wide outside lane

LOS	Maximum V/C
A	≤0.60
B	≤0.70
C	≤0.80
D	≤0.90
E	≤1.00
F	>1.00

PRIORITY ENGINEERING, INC.

INTERSECTION TURNING MOVEMENTS REDUCTION SHEET

ATION: La Costa Ave and Romeria St
Carlsbad, CA

DATE OF COUNT: Thu. 1/12/06
TIME OF COUNT: AM Peak

COUNTED BY: TB
WEATHER: Clear

TIME INTERVAL ENDING AT	FROM NORTH ON (SB) Romeria St				FROM SOUTH ON (NB) Romeria St				FROM EAST ON (WB) La Costa Ave				FROM WEST ON (EB) La Costa Ave				INTERVAL TOTALS
	Right	Thru	Left	Peds	Right	Thru	Left	Peds	Right	Thru	Left	Peds	Right	Thru	Left	Peds	
07:15 AM	5	0	5	0	0	0	13	0	2	147	4	0	9	141	11	0	337
07:30 AM	0	3	5	0	2	3	23	0	2	170	9	0	14	95	0	0	326
07:45 AM	2	4	0	0	10	7	53	0	2	145	9	0	12	72	2	0	318
08:00 AM	1	0	5	0	3	0	13	0	1	115	2	0	1	70	0	0	211
08:15 AM	2	0	6	0	3	1	12	0	1	105	0	0	0	84	1	0	215
08:30 AM	4	0	1	0	0	0	6	0	2	115	1	0	4	80	1	0	214
08:45 AM	4	0	2	0	2	0	13	0	0	97	0	0	6	72	0	0	196
09:00 AM	0	0	3	0	1	1	8	0	4	93	2	0	3	71	0	0	185
PEAK HOUR TOTALS	8	7	15	0	15	10	102	0	7	577	24	0	36	378	13	0	INTERSECTION
ALL MOVEMENTS	30				127				608				427				1192
PEAK HOUR FACTOR	0.75				0.45				0.84				0.66				0.88

S = Pedestrians Across Intersection Leg
= Peak Hour Factor

AM PEAK HOUR: 7:00 AM TO 8:00 AM

UCED BY: JR

DATE OF REDUCTION: 1/15/2006

PRIORITY ENGINEERING, INC.

INTERSECTION TURNING MOVEMENTS REDUCTION SHEET

TURNING MOVEMENTS DIAGRAM

AM PEAK HOUR ENDING AT 8:00 AM

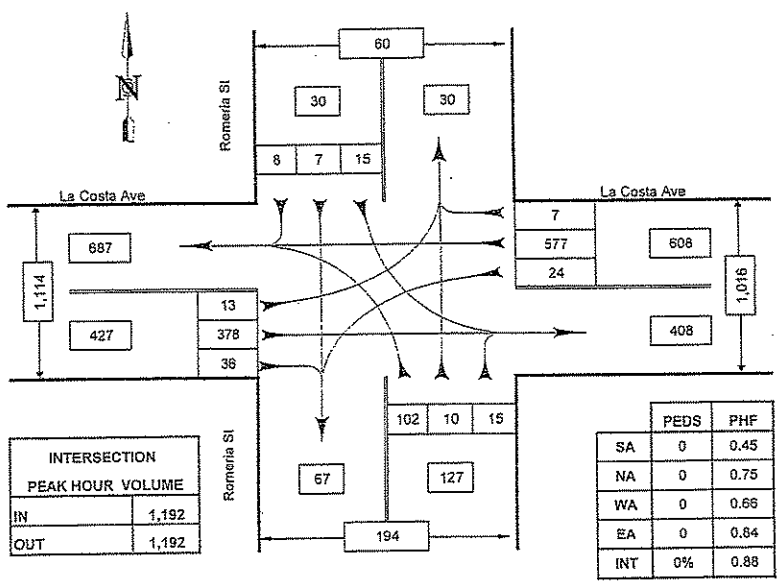

INTERSECTION PEAK HOUR VOLUME	
IN	1,192
OUT	1,192

	PEDS	PHF
SA	0	0.45
NA	0	0.75
WA	0	0.66
EA	0	0.84
INT	0%	0.88

PEDS = Pedestrians
PHF = Peak Hour Factor

La Costa Ave and Romeria St

Carlsbad, CA

COUNTED BY: TB
REDUCED BY: JR
DATE: 1/15/2006

DATE OF COUNT: 1/12/06
TIME OF COUNT: AM Peak
WEATHER: Clear

26-A
EX

PRIORITY ENGINEERING, INC.

INTERSECTION TURNING MOVEMENTS REDUCTION SHEET

TION: La Costa Ave and Romeria St
Carlsbad, CA

DATE OF COUNT: Thu. 1/12/06
TIME OF COUNT: PM Peak

COUNTED BY: TB
WEATHER: Clear

TIME INTERVAL ENDING AT	FROM NORTH ON (SB) Romeria St				FROM SOUTH ON (NB) Romeria St				FROM EAST ON (WB) La Costa Ave				FROM WEST ON (EB) La Costa Ave				INTERVAL TOTALS
	Right	Thru	Left	Peds	Right	Thru	Left	Peds	Right	Thru	Left	Peds	Right	Thru	Left	Peds	
04:15 PM	4	0	2	0	5	0	9	0	0	111	1	0	8	125	3	0	269
04:30 PM	0	0	0	0	1	1	14	0	6	101	4	0	9	118	0	0	254
04:45 PM	3	1	1	0	3	0	9	0	3	111	0	0	12	140	3	0	286
05:00 PM	1	0	1	0	2	0	10	0	1	92	2	0	13	130	0	0	252
05:15 PM	1	1	4	0	7	3	8	0	4	118	2	0	11	152	2	0	313
05:30 PM	3	0	2	0	5	0	11	0	1	120	2	0	15	171	4	0	334
05:45 PM	2	0	0	0	1	0	7	0	4	98	1	0	7	158	0	0	278
06:00 PM	1	0	1	0	4	1	6	0	1	92	1	0	12	152	2	0	273
PEAK HOUR TOTALS	7	1	7	0	17	4	32	0	10	428	6	0	45	633	8	0	INTERSECTION
ALL MOVEMENTS	15				53				444				686				1198
PEAK HOUR FACTOR	0.63				0.74				0.90				0.90				0.90

: = Pedestrians Across Intersection Leg
= Peak Hour Factor

PM PEAK HOUR: 5:00 PM TO 6:00 PM

ICED BY: JR

DATE OF REDUCTION: 1/15/2006

PRIORITY ENGINEERING, INC.

INTERSECTION TURNING MOVEMENTS REDUCTION SHEET

TURNING MOVEMENTS DIAGRAM
PM PEAK HOUR ENDING AT 6:00 PM

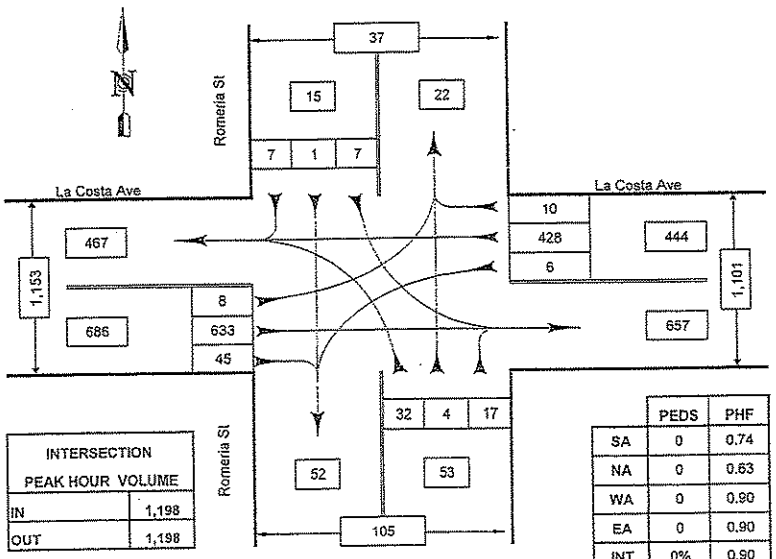

INTERSECTION PEAK HOUR VOLUME	
IN	1,198
OUT	1,198

	PEDS	PHF
SA	0	0.74
NA	0	0.63
WA	0	0.90
EA	0	0.90
INT	0%	0.90

PEDS = Pedestrians
PHF = Peak Hour Factor

La Costa Ave and Romeria St

Carlsbad, CA

COUNTED BY: TB
REDUCED BY: JR
DATE: 1/15/2006

DATE OF COUNT: 1/12/06
TIME OF COUNT: PM Peak
WEATHER: Clear

26-A
EX

Intersection Capacity Utilization (ICU) Worksheet

INTERSECTION CAPACITY UTILIZATION

INTERSECTION: Cadencia St (N/S) La Costa Ave (E/W)
SCENARIO : Existing
COUNT DATE: 1-12-06 PEAK HR: AM
ANALYST : MTM AGENCY : Willdan

MOVEMENT	# OF LANES	CAPACITY	AM PEAK HOUR	UNADJUSTED VOLUME	AM PEAK V/C	
NB Left	Ø	—	4		—	
NB Thru	Ø	—	8		—	
NB Right/THRU/LT	1	1,800	29+4+8		0.02	
SB Left	Ø	—	75		—	
SB Thru	Ø	—	19		—	
SB Right/THRU/LT	1	1,800	60+19+75		~~0.03~~ .07	*
EB Left	1	1,800	13		0.01	
EB Thru/RT	1	2,000	478+4		0.24	*
EB Right	Ø	—	4		—	
WB Left	1	1,800	9		0.01	*
WB Thru/RT	2	4,000	453+14		~~0.11~~ .12	
WB Right	Ø	—	14		—	
NORTH/SOUTH CRITICAL SUMS					~~0.09~~ .11	
EAST/WEST CRITICAL SUMS					0.25	
SUM OF CRITICAL V/C RATIO					~~0.34~~ .36	
ADJUSTMENT FOR LOST TIME					0.10	
INTERSECTION CAPACITY UTILIZATION (ICU)					~~0.44~~ .46	
LEVEL OF SERVICE (LOS)					A	

NOTES:

* Denotes Critical Movements
** Extra wide outside lane

LOS	Maximum V/C
A	≤ 0.60
B	≤ 0.70
C	≤ 0.80
D	≤ 0.90
E	≤ 1.00
F	>1.00

INTERSECTION CAPACITY UTILIZATION

INTERSECTION: Cadencia St (N/S) La Costa Ave (E/W)
SCENARIO : Existing
COUNT DATE: 1-12-06 PEAK HR: PM
ANALYST : MTM AGENCY : Willdan

MOVEMENT	# OF LANES	CAPACITY	PM PEAK HOUR	UNADJUSTED VOLUME	PM PEAK V/C	
NB Left		—	8		—	
NB Thru		—	7		—	*
NB Right /THRU/RT	1	1,800	8+8+7		~~0.00~~ .01	**
SB Left		—	34		—	*
SB Thru		—	4			
SB Right/THRU/LT	1	1,800	22+54+4		~~0.01~~ .03	**
EB Left	1	1,800	89		0.05	
EB Thru /RT	1	2,000	560+12		~~0.28~~ .29	* **
EB Right		—	12		—	
WB Left	1	1,800	12		0.01	* **
WB Thru /RT	2	4,000	351+42		~~0.09~~ .10	
WB Right	Ø 1	—	42		—	
NORTH/SOUTH CRITICAL SUMS					~~0.05~~ .04	
EAST/WEST CRITICAL SUMS					~~0.29~~ .30	
SUM OF CRITICAL V/C RATIO					~~0.34~~ .34	
ADJUSTMENT FOR LOST TIME					0.10	
INTERSECTION CAPACITY UTILIZATION (ICU)					~~0.44~~ .44	
LEVEL OF SERVICE (LOS)					A	

NOTES:

* Denotes Critical Movements
** Extra wide outside lane

LOS	Maximum V/C
A	≤ 0.60
B	≤ 0.70
C	≤ 0.80
D	≤ 0.90
E	≤ 1.00
F	>1.00

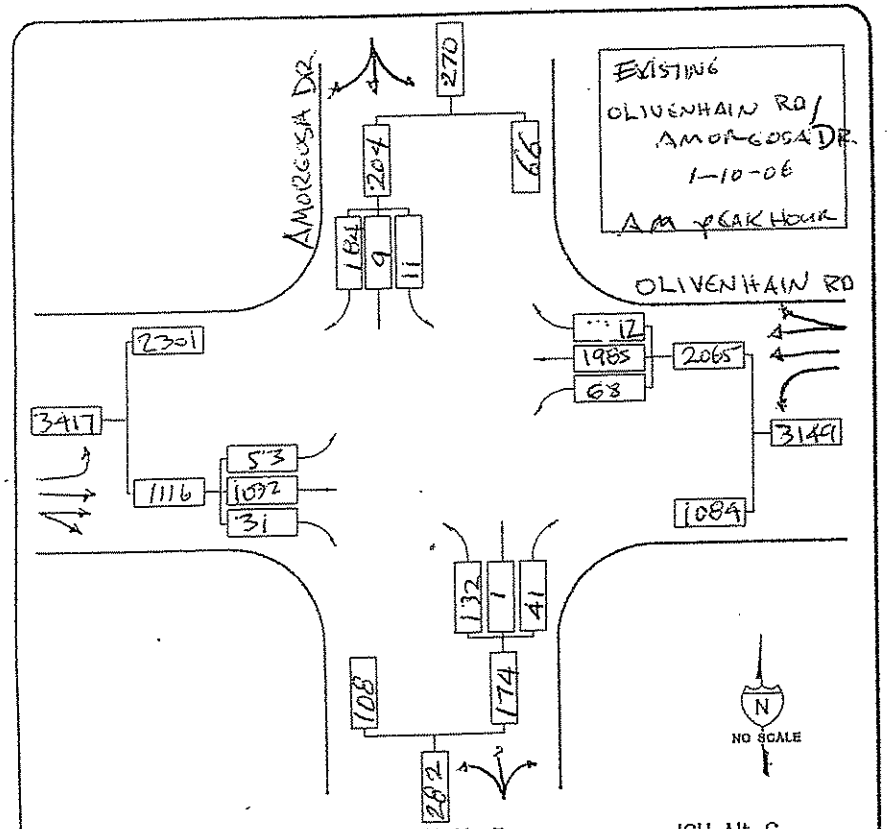

ICU Alt. A			ICU Alt. B			ICU Alt. C		
MOVE	CAPACITY	ICU	MOVE	CAPACITY	ICU	MOVE	CAPACITY	ICU
	1997/4000	0.50						
	53/1800	0.03						
	204/1800	0.11						
	174/1800	0.10						
	+	0.10						
		0.84						

L.O.S. ____ No mitigation LOS D

L.O.S. ____ Mitigation

L.O.S. ____ Mitigation

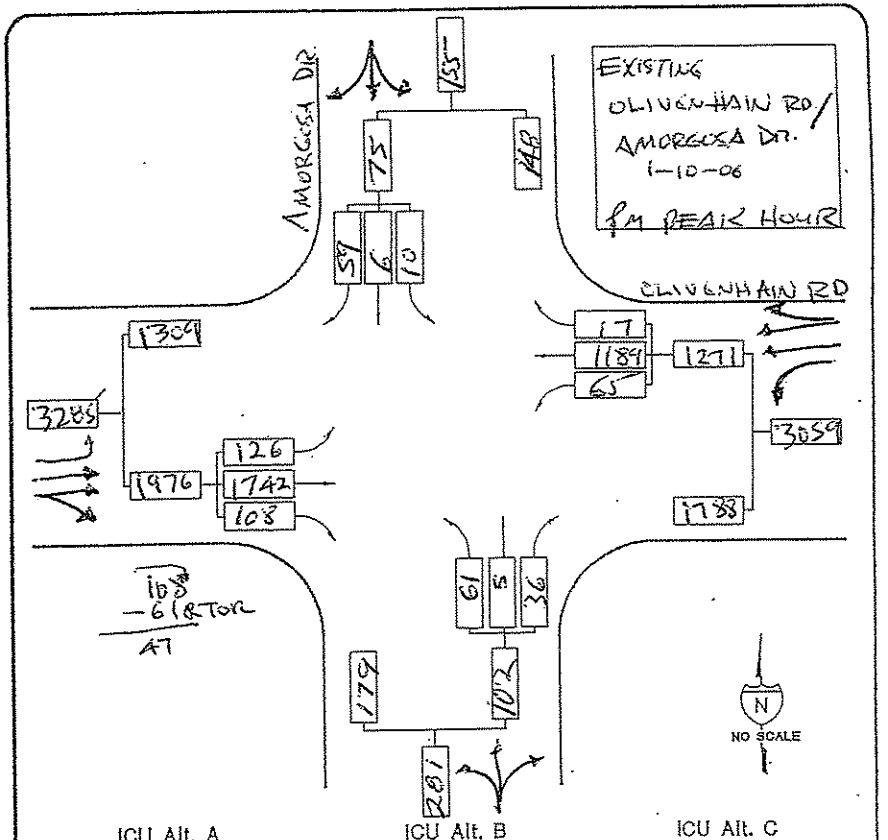

ICU Alt. A			ICU Alt. B			ICU Alt. C		
MOVE	CAPACITY	ICU	MOVE	CAPACITY	ICU	MOVE	CAPACITY	ICU
	1742+47/4000	0.45						
	65/1800	0.04						
	75/1800	0.04						
	102/1800	0.06						
	+	0.10						
		0.69						

L.O.S. ____ No mitigation LOS B

L.O.S. ____ Mitigation

L.O.S. ____ Mitigation

PAGE OF EX.

37 A#P

MJ

URBAN SYSTEMS

Intersection Capacity Utilization (ICU) Worksheet

INTERSECTION CAPACITY UTILIZATION

INTERSECTION: Calle Timiteo (N/S) La Costa Ave (E/W)
SCENARIO : Existing
COUNT DATE: 01-10-06 PEAK HR: AM
ANALYST : MTM AGENCY : Willdan

MOVEMENT	# OF LANES	CAPACITY	AM PEAK HOUR	UNADJUSTED VOLUME	AM PEAK V/C	
NB Left	0.5	900	93		0.10	*
NB Thru	0	0	0		0.00	
NB Right	0.5	900	23		0.03	
SB Left	0	0	0		0	
SB Thru	0	0	0		0.00	*
SB Right	0	0	0		0	
EB Left	0	0	0		0.00	
EB Thru	1.5	3,000	387		0.13	*
EB Right	0.5	900	20		0.02	
WB Left	0.5	900	7		0.01	*
WB Thru	1.5	3,000	331		0.11	
WB Right	0	0	0		0.00	
NORTH/SOUTH CRITICAL SUMS					0.10	
EAST/WEST CRITICAL SUMS					0.14	
SUM OF CRITICAL V/C RATIO					0.24	
ADJUSTMENT FOR LOST TIME					0.10	
INTERSECTION CAPACITY UTILIZATION (ICU)					0.34	
LEVEL OF SERVICE (LOS)					A	

NOTES:

* Denotes Critical Movements
** Extra wide outside lane

LOS	Maximum V/C
A	≤ 0.60
B	≤ 0.70
C	≤ 0.80
D	≤ 0.90
E	≤ 1.00
F	>1.00

INTERSECTION CAPACITY UTILIZATION

INTERSECTION: Calle Timiteo (N/S) La Costa Ave (E/W)
SCENARIO : Existing
COUNT DATE: 01-10-06 PEAK HR: PM
ANALYST : MTM AGENCY : Willdan

MOVEMENT	# OF LANES	CAPACITY	PM PEAK HOUR	UNADJUSTED VOLUME	PM PEAK V/C	
NB Left	0.5	900	46		0.05	*
NB Thru	0	0	0		0.00	
NB Right	0.5	900	7		0.01	
SB Left	0	0	0		0	
SB Thru	0	0	0		0.00	*
SB Right	0	0	0		0	
EB Left	0	0	0		0.00	
EB Thru	1.5	3,000	152		0.05	*
EB Right	0.5	900	109		0.12	
WB Left	0.5	900	5		0.01	*
WB Thru	1.5	3,000	111		0.04	
WB Right	0	0	0		0.00	
NORTH/SOUTH CRITICAL SUMS					0.05	
EAST/WEST CRITICAL SUMS					0.06	
SUM OF CRITICAL V/C RATIO					0.11	
ADJUSTMENT FOR LOST TIME					0.10	
INTERSECTION CAPACITY UTILIZATION (ICU)					0.21	
LEVEL OF SERVICE (LOS)					A	

NOTES:

* Denotes Critical Movements
** Extra wide outside lane

LOS	Maximum V/C
A	≤ 0.60
B	≤ 0.70
C	≤ 0.80
D	≤ 0.90
E	≤ 1.00
F	>1.00

38 AM EX

EXISTING
AM PEAK HOUR

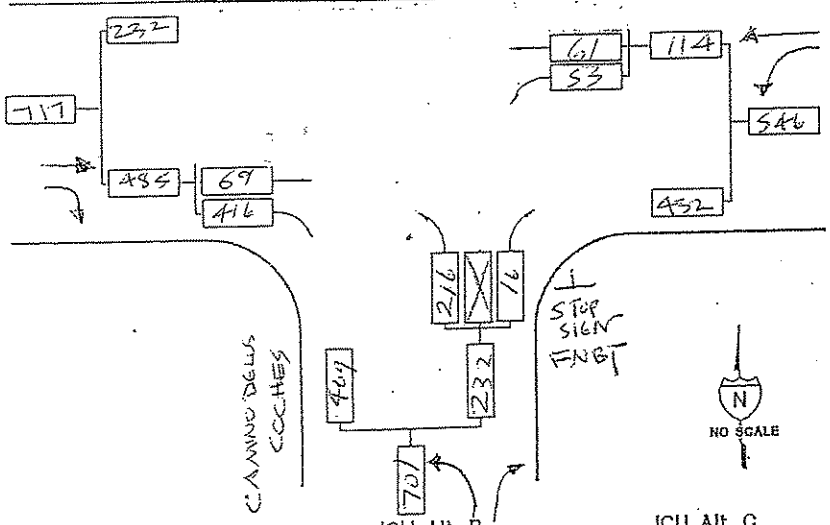

ICU Alt. A			ICU Alt. B			ICU Alt. C		
MOVE	CAPACITY	ICU	MOVE	CAPACITY	ICU	MOVE	CAPACITY	ICU
↰	53/1800	0.03						
↱	416/1800	0.23						
↰	216/1800	0.12						
	+	0.10						
		0.48						

L.O.S. ____ No mitigation — LOS A

L.O.S. ____ Mitigation

L.O.S. ____ Mitigation

EXISTING PM
PEAK HOUR

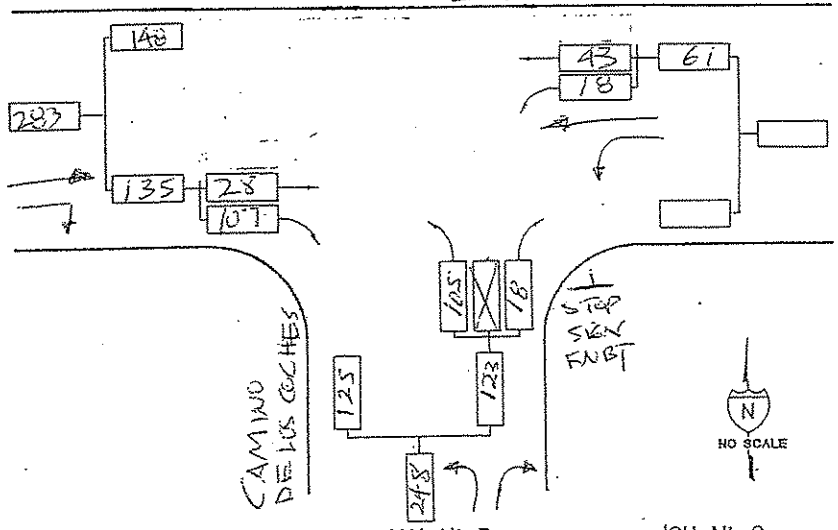

ICU Alt. A			ICU Alt. B			ICU Alt. C		
MOVE	CAPACITY	ICU	MOVE	CAPACITY	ICU	MOVE	CAPACITY	ICU
↰	18/1800	0.01						
↱	107/1800	0.09						
↰	105/1800	0.06						
	+	0.10						
		0.26						

L.O.S. ____ No mitigation — LOS A

L.O.S. ____ Mitigation

L.O.S. ____ Mitigation

PAGE OF

EXISTING

PRIORITY ENGINEERING, INC.

INTERSECTION TURNING MOVEMENTS REDUCTION SHEET

TION: La Costa Ave and Camino De Los Coches
Carlsbad, CA

DATE OF COUNT: Tue. 1/10/06
TIME OF COUNT: AM Peak

COUNTED BY: BW
WEATHER: Clear

TIME INTERVAL ENDING AT	FROM NORTH ON (SB) N/A				FROM SOUTH ON (NB) Camino De Los Coches				FROM EAST ON (WB) La Costa Ave				FROM WEST ON (EB) La Costa Ave				INTERVAL TOTALS
	Right	Thru	Left	Peds	Right	Thru	Left	Peds	Right	Thru	Left	Peds	Right	Thru	Left	Peds	
07:15 AM	0	0	0	0	6	0	27	0	0	17	6	0	67	22	0	0	145
07:30 AM	0	0	0	0	3	0	60	0	0	10	13	0	184	19	0	0	289
07:45 AM	0	0	0	0	1	0	92	0	0	21	15	0	142	9	0	0	280
08:00 AM	0	0	0	0	6	0	37	0	0	13	19	0	23	19	0	0	117
08:15 AM	0	0	0	0	6	0	12	0	0	14	3	0	8	17	0	0	60
08:30 AM	0	0	0	0	2	0	18	0	0	9	3	0	15	15	0	0	62
08:45 AM	0	0	0	0	1	0	11	0	0	9	1	0	5	10	0	0	37
09:00 AM	0	0	0	0	1	0	6	0	0	12	5	0	8	7	0	0	39
PEAK HOUR TOTALS	0	0	0	0	16	0	216	0	0	61	53	0	416	69	0	0	INTERSECTION
ALL MOVEMENTS	0				232				114				485				831
PEAK HOUR FACTOR	#DIV/0!				0.62				0.79				0.60				0.72

= Pedestrians Across Intersection Leg
Peak Hour Factor

AM PEAK HOUR: 7:00 AM TO 8:00 AM

CED BY: JR

DATE OF REDUCTION: 1/10/2006

PRIORITY ENGINEERING, INC.

INTERSECTION TURNING MOVEMENTS REDUCTION SHEET

TURNING MOVEMENTS DIAGRAM

AM PEAK HOUR ENDING AT 8:00 AM

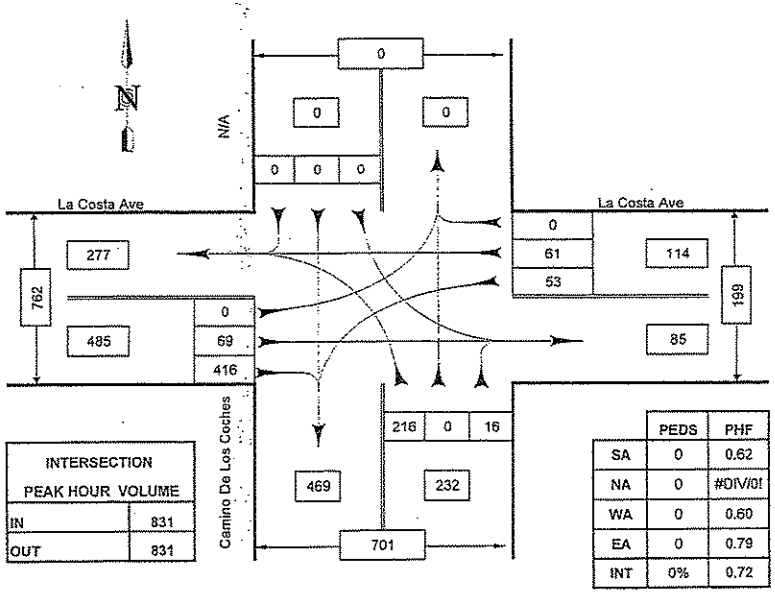

INTERSECTION PEAK HOUR VOLUME	
IN	831
OUT	831

	PEDS	PHF
SA	0	0.62
NA	0	#DIV/0!
WA	0	0.60
EA	0	0.79
INT	0%	0.72

PEDS = Pedestrians
PHF = Peak Hour Factor

La Costa Ave and Camino De Los Coches

Carlsbad, CA

COUNTED BY: BW
REDUCED BY: JR
DATE: 1/10/2006

DATE OF COUNT: 1/10/06
TIME OF COUNT: AM Peak
WEATHER: Clear

39-A
EX

PRIORITY ENGINEERING, INC.

INTERSECTION TURNING MOVEMENTS REDUCTION SHEET

.TION: La Costa Ave and Camino De Los Coches
Carlsbad, CA

DATE OF COUNT: Tue. 1/10/06
TIME OF COUNT: PM Peak

COUNTED BY: BW
WEATHER: Clear

TIME INTERVAL ENDING AT	FROM NORTH ON (SB) N/A				FROM SOUTH ON (NB) Camino De Los Coches				FROM EAST ON (WB) La Costa Ave				FROM WEST ON (EB) La Costa Ave				INTERVAL TOTALS
	Right	Thru	Left	Peds	Right	Thru	Left	Peds	Right	Thru	Left	Peds	Right	Thru	Left	Peds	
04:15 PM	0	0	0	0	2	0	30	0	0	11	1	0	19	7	0	0	70
04:30 PM	0	0	0	0	3	0	26	0	0	15	4	0	18	7	0	0	73
04:45 PM	0	0	0	0	5	0	20	0	0	8	5	0	40	8	0	0	86
05:00 PM	0	0	0	0	3	0	30	0	0	9	2	0	22	7	0	0	73
05:15 PM	0	0	0	0	7	0	25	0	0	11	7	0	27	6	0	0	87
05:30 PM	0	0	0	0	3	0	18	0	0	9	4	0	30	8	0	0	72
05:45 PM	0	0	0	0	3	0	19	0	0	7	0	0	30	12	0	0	71
06:00 PM	0	0	0	0	3	0	18	0	0	5	2	0	31	7	0	0	66
PEAK HOUR TOTALS	0	0	0	0	18	0	105	0	0	43	18	0	107	28	0	0	INTERSECTION
ALL MOVEMENTS	0				123				61				135				319
PEAK HOUR FACTOR	#DIV/0!				0.85				0.80				0.70				0.92

s = Pedestrians Across Intersection Leg
= Peak Hour Factor

PM PEAK HOUR: 4:15 PM TO 5:15 PM

JCED BY: JR

DATE OF REDUCTION: 1/10/2006

PRIORITY ENGINEERING, INC.

INTERSECTION TURNING MOVEMENTS REDUCTION SHEET

TURNING MOVEMENTS DIAGRAM
PM PEAK HOUR ENDING AT 5:15 PM

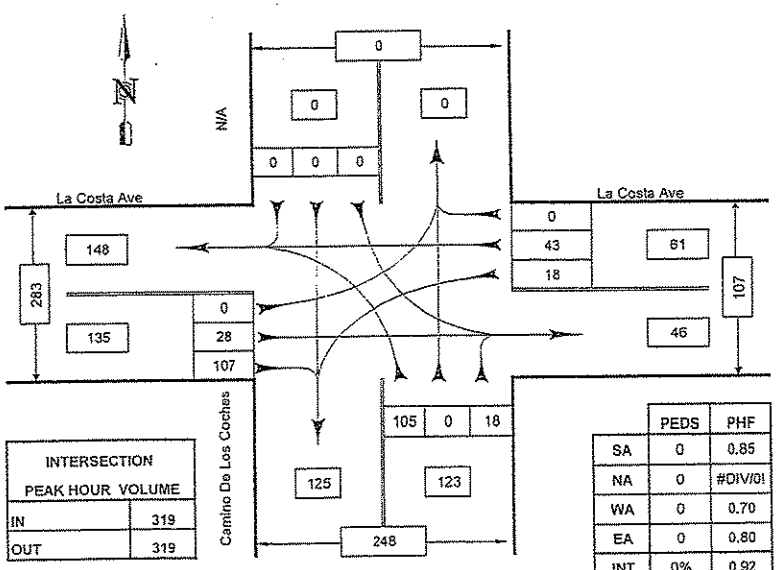

INTERSECTION PEAK HOUR VOLUME	
IN	319
OUT	319

	PEDS	PHF
SA	0	0.85
NA	0	#DIV/0!
WA	0	0.70
EA	0	0.80
INT	0%	0.92

PEDS = Pedestrians
PHF = Peak Hour Factor

La Costa Ave and Camino De Los Coches

Carlsbad, CA

COUNTED BY: BW
REDUCED BY: JR
DATE: 1/10/2006

DATE OF COUNT: 1/10/06
TIME OF COUNT: PM Peak
WEATHER: Clear

42 A&P 1/2
EXIST

INTERSECTION #42

LA COSTA AVENUE / EXISTING DRIVEWAY / FUTURE DRIVEWAY #1

The east-west through movements were extrapolated from the approach / departure volumes at the La Costa Avenue / Calle Timiteo intersection to the east. The existing driveway on the south leg was counted by Priority Engineering 01/11/06, but count sheets were not provided. The driveway volumes were used in the initial ILV analysis in the draft Wildan report.

42 A & P
EXIST.

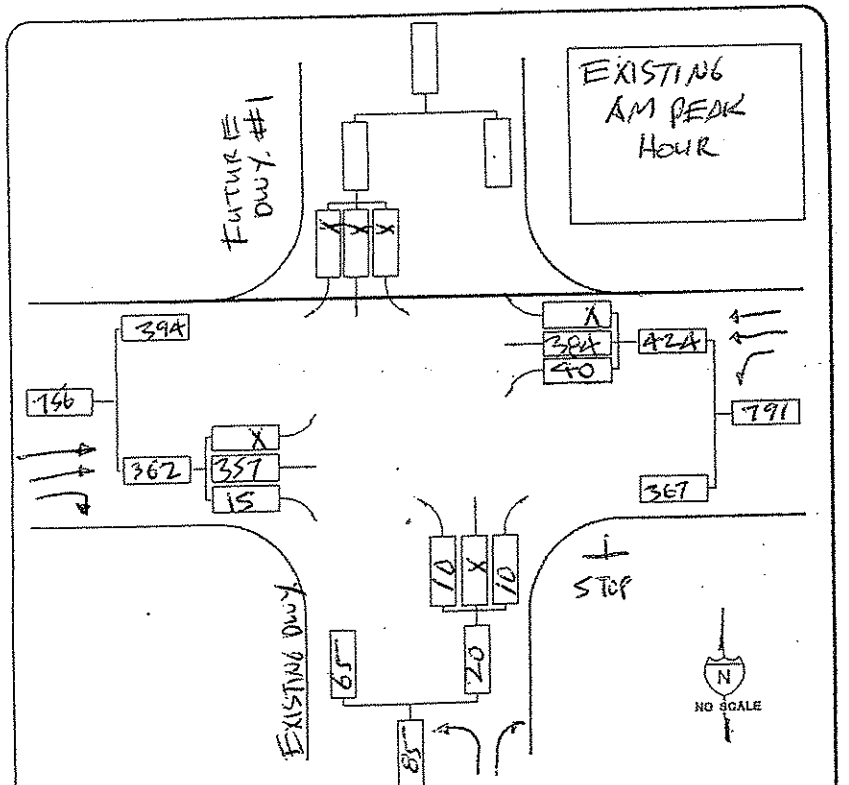

ICU Alt. A			ICU Alt. B			ICU Alt. C		
MOVE	CAPACITY	ICU	MOVE	CAPACITY	ICU	MOVE	CAPACITY	ICU
⇉	384/4000	0.10						
↰	40/1800	0.02						
↱	10/1800	0.01						
	+	0.10						
		0.23						
		LOS A						

L.O.S. ____ No mitigation

L.O.S. ____ Mitigation

L.O.S. ____ Mitigation

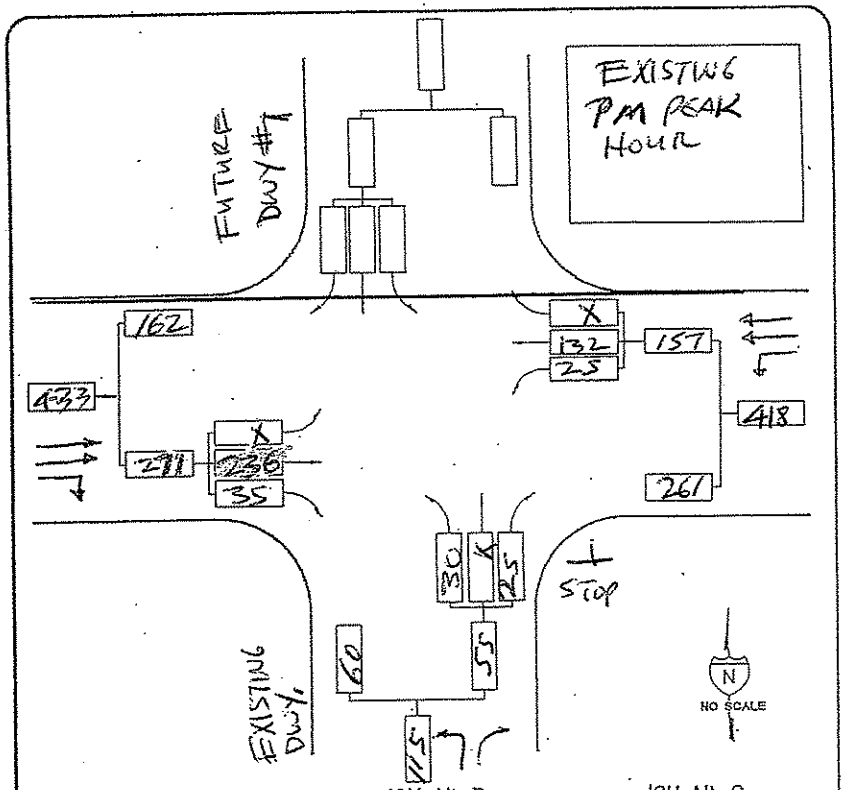

ICU Alt. A			ICU Alt. B			ICU Alt. C		
MOVE	CAPACITY	ICU	MOVE	CAPACITY	ICU	MOVE	CAPACITY	ICU
⇉	236/4000	0.06						
↰	25/1800	0.01						
↱	30/1800	0.02						
	+	0.10						
		0.19						

L.O.S. ____ No mitigation

LOS A

L.O.S. ____ Mitigation

L.O.S. ____ Mitigation

PAGE OF

URBAN SYSTEMS

N/N

43 A&P
EXISTING

INTERSECTION #43

LA COSTA AVENUE / EASST DRIVEWAY #3 / PASEO TAMARINDO

There is no intersection at this location under existing condition. This intersection will be added with the easterly single-family portion of the project. The intersection will be stop sign controlled, facing southbound traffic.

44 A&P
EXIST.

INTERSECTION #44

RANCHO SANTA FE / PROJECT DRIVEWAY #4

This will be a right-in-only driveway with no conflicting movements, so LOS does not apply.

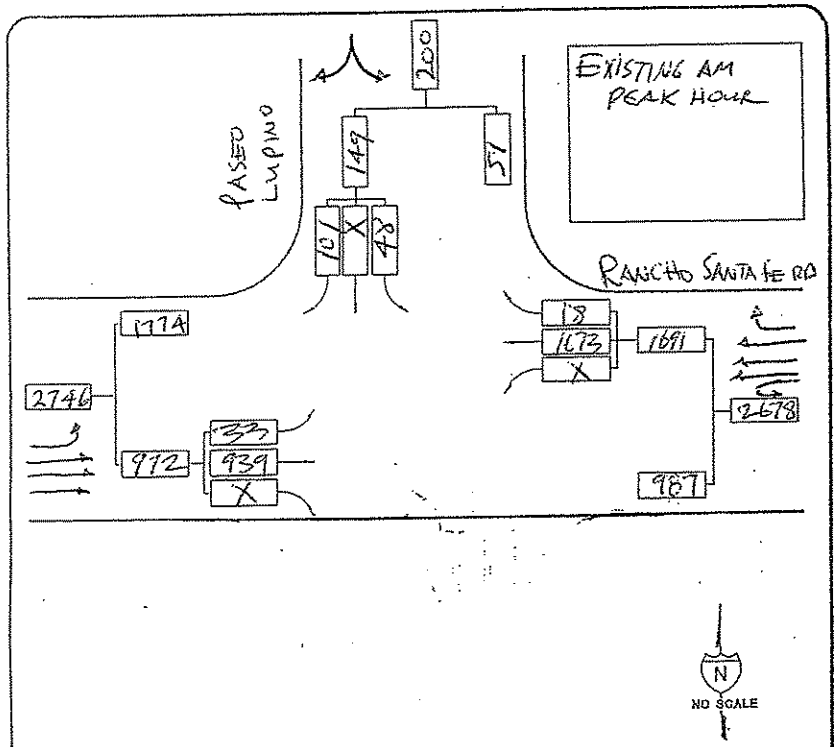

ICU Alt. A			ICU Alt. B			ICU Alt. C		
MOVE	CAPACITY	ICU	MOVE	CAPACITY	ICU	MOVE	CAPACITY	ICU
	1673/6000	0.28						
	33/1800	0.02						
	149/1800	0.08						
	+	0.10						
		0.48						

L.O.S. ____ No mitigation LOS A L.O.S. ____ Mitigation L.O.S. ____ Mitigation

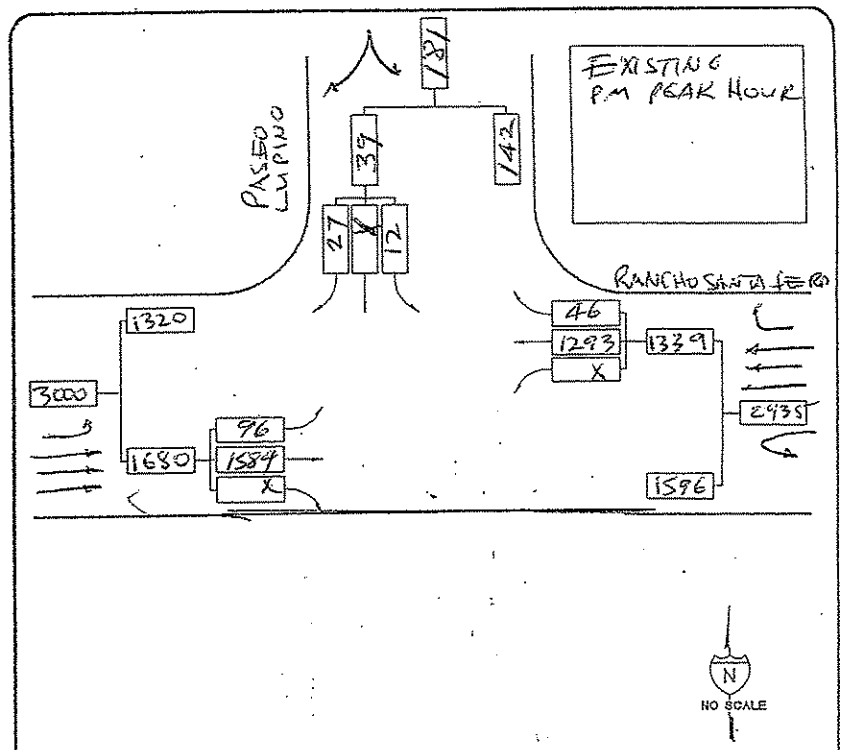

ICU Alt. A			ICU Alt. B			ICU Alt. C		
MOVE	CAPACITY	ICU	MOVE	CAPACITY	ICU	MOVE	CAPACITY	ICU
	1584/6000	0.26						
	NOM/1800	0.01						
	39/1800	0.02						
	+	0.10						
		0.39						

L.O.S. ____ No mitigation LOS A L.O.S. ____ Mitigation L.O.S. ____ Mitigation

PAGE OF

45 EX
A&P 1/2

URBAN SYSTEMS

EC-22-2006 10:02 AM TSI

45- A&P
EXIST.

Transportation Studies, Inc.
1350 Reynolds Avenue, Ste 115
Irvine, CA. 92614

Location : PASEO LUPINO
Segment : N/O RANCHO SANTA FE ROAD
Client : URBAN SYSTEMS

Site: CARLSBAD
Date: 12/20/06 2/2

Day: Wednesday

Interval Begin	NB AM		NB PM		SB AM		SB PM		Combined AM		Combined PM	
12:00	0	1	5	14	0	1	5	18	0	2	10	32
12:15	0		3		0		5		0		8	
12:30	1		3		1		1		2		4	
12:45	0		3		0		7		0		10	
01:00	0	0	7	24	0	0	7	25	0	0	14	49
01:15	0		5		0		5		0		10	
01:30	0		4		0		5		0		9	
01:45	0		8		0		8		0		16	
02:00	1	2	6	39	2	2	11	42	3	4	17	81
02:15	0		1		0		12		0		13	
02:30	1		20		0		12		1		32	
02:45	0		12		0		7		0		19	
03:00	0	0	6	39	0	1	7	31	0	1	13	70
03:15	0		12		0		10		0		22	
03:30	0		9		1		11		1		20	
03:45	0		12	4-5PM NB	0		3	4-5PM SB	0		15	
04:00	0	0	5	29	0	2	5	25	0	2	10	54
04:15	0		5		1		7		1		12	
04:30	0		10		1		8		1		18	
04:45	0		9		0		5		0		14	
05:00	1	1	7	28	0	5	6	22	1	6	13	50
05:15	0		4		0		8		0		12	
05:30	0		10		4		4		4		14	
05:45	0		7		1		4		1		11	
06:00	1	14	5	30	4	30	4	19	5	44	9	49
06:15	2		8		5		3		7		11	
06:30	7	7-8 AM NB	8		8	7-8 AM SB	8		15		16	
06:45	4		9		13		4		17		13	
07:00	8	31	12	32	6	59	6	14	14	90	18	46
07:15	3		1		14		2		17		3	
07:30	8		11		17		1		25		12	
07:45	12		8		22		5		34		13	
08:00	11	24	10	26	16	48	4	16	27	72	14	42
08:15	7		3		16		4		23		7	
08:30	3		5		10		3		13		8	
08:45	3		8		6		5		9		13	
09:00	4	24	8	18	13	46	1	2	17	70	9	20
09:15	8		5		14		1		22		6	
09:30	6		2		14		0		20		2	
09:45	6		3		5		0		11		3	
10:00	6	21	2	6	4	30	2	8	10	51	4	14
10:15	8		2		5		3		13		5	
10:30	2		0		9		2		11		2	
10:45	5		2		12		1		17		3	
11:00	4	20	1	4	7	30	1	2	11	50	2	6
11:15	3		1		6		0		9		1	
11:30	8		1		10		0		18		1	
11:45	5		1		7		1		12		2	
Totals	138		289		254		224		392		513	
Split%	35.2		56.3		64.8		43.7					
Day Totals		427				478				905		
Day Splits		47.2				52.8						
Peak Hour	07:30		02:30		07:30		01:45		07:30		02:30	
Volume	38		50		71		43		109		86	
Factor	0.79		0.63		0.81		0.90		0.80		0.67	

EXISTING PEAK HOUR VOLUMES ON PASEO LUPINO

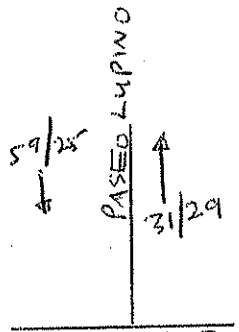

EXISTING AM/PM PEAK HOUR FLOW

NOTE: THESE VOLUMES ARE LESS THAN USED IN FIGURE 3-5, #45.

SO OK TO USE PREVIOUS COUNTS AS SHOWN IN FIGURE 3-5, #45.

Data File : D0612061

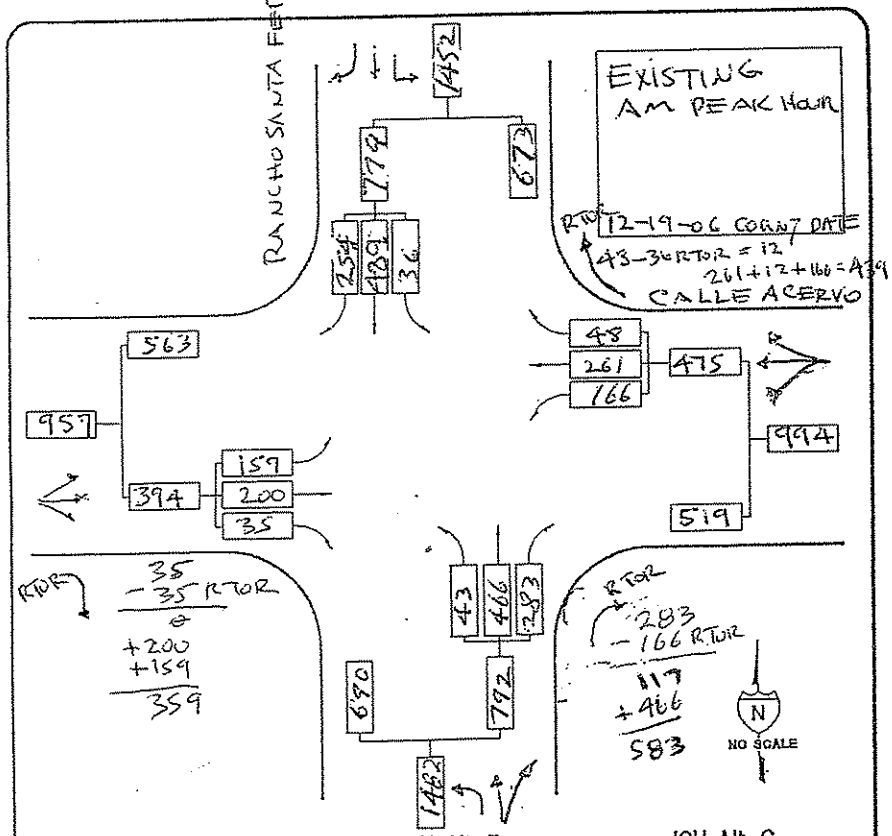

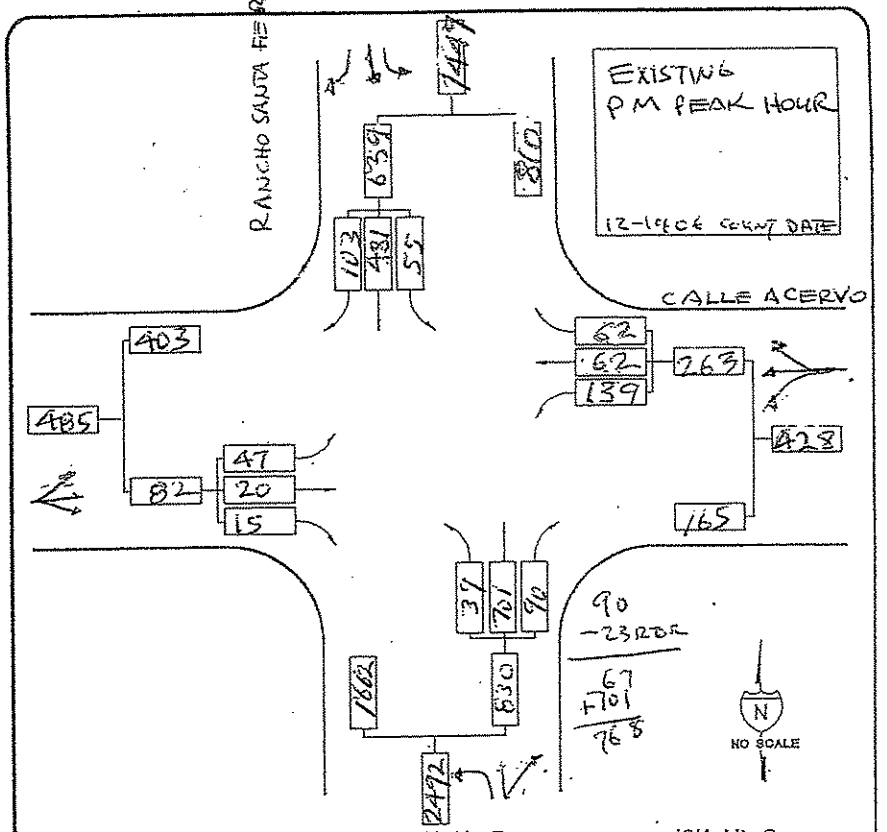

ICU Alt. A

MOVE	CAPACITY	ICU
	439/1800	0.24
	359/1800	0.20
	36/1800	0.02
	583/2000	0.29
LOST TIME +		0.10
		0.85

L.O.S. ____ No mitigation

LOS D

ICU Alt. B

MOVE	CAPACITY	ICU

L.O.S. ____ Mitigation

ICU Alt. C

MOVE	CAPACITY	ICU

L.O.S. ____ Mitigation

ICU Alt. A

MOVE	CAPACITY	ICU
	263/1800	0.15
	82/1800	0.05
	768/2000	0.38
	55/1800	0.03
LOST TIME +		0.10
		0.71

L.O.S. ____ No mitigation

LOS C

ICU Alt. B

MOVE	CAPACITY	ICU

L.O.S. ____ Mitigation

ICU Alt. C

MOVE	CAPACITY	ICU

L.O.S. ____ Mitigation

PAGE OF

46 EX A&P

JLS

IRRAN SYSTEMS

46 A&P EX

Transportation Studies, Inc.
1350 Reynolds Avenue
Suite 115
Irvine, CA. 92614

City: CARLSBAD
N-S Direction: RANCHO SANTA FE ROAD
E-W Direction: CALLE ACERVO

File Name : H0612038
Site Code : 00001944
Start Date : 12/19/2006
Page No : 1

Groups Printed- Turning Movements

	RANCHO SANTA FE ROAD Southbound			CALLE ACERVO Westbound			RANCHO SANTA FE ROAD Northbound			CALLE ACERVO Eastbound			
Start Time	Right	Thru	Left	Right	Thru	Left	Right	Thru	Left	Right	Thru	Left	Int. Total
Factor	1.0	1.0	1.0	1.0	1.0	1.0	1.0	1.0	1.0	1.0	1.0	1.0	
07:00 AM	10	158	3	12	10	13	8	38	7	3	6	6	274
07:15 AM	35	125	6	15	55	38	46	69	8	7	13	17	434
07:30 AM	70	119	9	12	68	33	71	111	12	9	47	41	602
07:45 AM	63	122	10	13	66	41	75	118	14	10	52	44	628
Total	178	524	28	52	199	125	200	336	41	29	118	108	1938
08:00 AM	67	128	10	11	69	43	72	120	10	7	55	40	632
08:15 AM	54	120	7	12	58	49	65	117	7	9	46	34	578
08:30 AM	41	125	4	14	45	53	42	121	5	6	38	47	541
08:45 AM	15	117	4	9	18	25	13	114	3	5	17	20	360
Total	177	490	25	46	190	170	192	472	25	27	156	141	2111
*** BREAK ***													
04:00 PM	24	100	14	14	16	29	18	166	8	3	4	9	405
04:15 PM	25	103	17	18	20	26	18	158	11	4	8	15	423
04:30 PM	21	112	14	13	15	33	23	170	9	6	5	14	435
04:45 PM	28	116	14	19	18	34	20	168	7	3	6	12	445
Total	98	431	59	64	69	122	79	662	35	16	23	50	1708
05:00 PM	25	124	12	12	14	34	25	178	11	2	4	9	450
05:15 PM	29	129	15	18	15	38	22	185	12	4	5	12	484
05:30 PM	21	119	11	11	12	24	19	171	8	3	3	10	412
05:45 PM	23	111	12	13	13	30	16	173	7	2	4	6	410
Total	98	483	50	54	54	126	82	707	38	11	16	37	1756
Grand Total	551	1928	162	216	512	543	553	2177	139	83	313	336	7513
Apprch %	20.9	73.0	6.1	17.0	40.3	42.7	19.3	75.9	4.8	11.3	42.8	45.9	
Total %	7.3	25.7	2.2	2.9	6.8	7.2	7.4	29.0	1.9	1.1	4.2	4.5	

Transportation Studies, Inc.
1350 Reynolds Avenue
Suite 115
Irvine, CA. 92614

File Name : H0612038
Site Code : 00001944
Start Date : 12/19/2006
Page No : 2

	RANCHO SANTA FE ROAD Southbound				CALLE ACERVO Westbound				RANCHO SANTA FE ROAD Northbound				CALLE ACERVO Eastbound				
Start Time	Right	Thru	Left	App. Total	Right	Thru	Left	App. Total	Right	Thru	Left	App. Total	Right	Thru	Left	App. Total	Int. Total
eak Hour From 07:00 AM to 08:45 AM - Peak 1 of 1																	
ntersection	07:30 AM																
Volume	254	489	36	779	48	261	166	475	283	466	43	792	35	200	159	394	2440
Percent	32.6	62.8	4.6		10.1	54.9	34.9		35.7	58.8	5.4		8.9	50.8	40.4		
08:00 Volume	67	128	10	205	11	69	43	123	72	120	10	202	7	55	40	102	632
eak Factor																	0.965
High Int.	08:00 AM				08:00 AM				07:45 AM				07:45 AM				
Volume	67	128	10	205	11	69	43	123	75	118	14	207	10	52	44	106	
eak Factor				0.950				0.965				0.957				0.929	

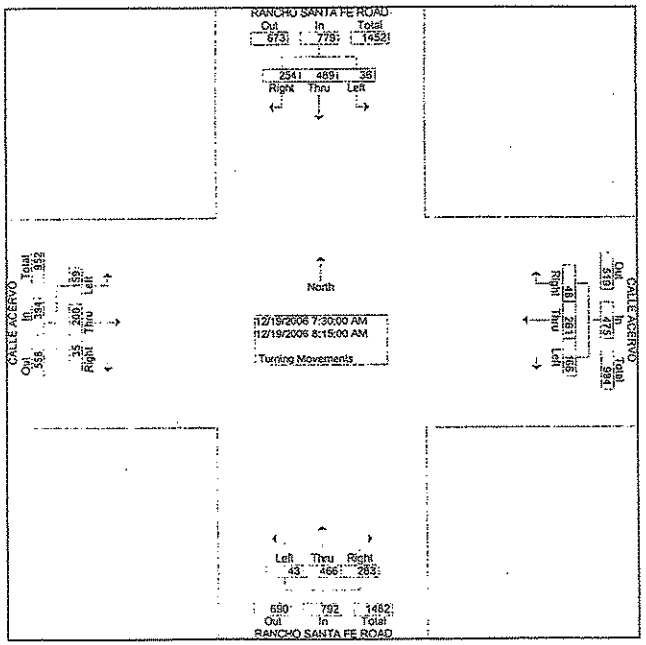

Transportation Studies, Inc.
1350 Reynolds Avenue
Suite 115
Irvine, CA. 92614

File Name : H0612038
Site Code : 00001944
Start Date : 12/19/2006
Page No : 3

	RANCHO SANTA FE ROAD Southbound				CALLE ACERVO Westbound				RANCHO SANTA FE ROAD Northbound				CALLE ACERVO Eastbound				
Start Time	Right	Thru	Left	App. Total	Right	Thru	Left	App. Total	Right	Thru	Left	App. Total	Right	Thru	Left	App. Total	Int. Total
Peak Hour From 04:00 PM to 05:45 PM - Peak 1 of 1																	
Intersection	04:30 PM																
Volume	103	481	55	639	62	62	139	263	90	701	39	830	15	20	47	82	1814
Percent	16.1	75.3	8.6		23.6	23.6	52.9		10.8	84.5	4.7		18.3	24.4	57.3		
05:15 Volume	29	129	15	173	18	15	38	71	22	185	12	219	4	5	12	21	484
Peak Factor																	0.937
High Int.	05:15 PM				04:45 PM				05:15 PM				04:30 PM				
Volume	29	129	15	173	19	18	34	71	22	185	12	219	6	5	14	25	
Peak Factor				0.923				0.926				0.947				0.820	

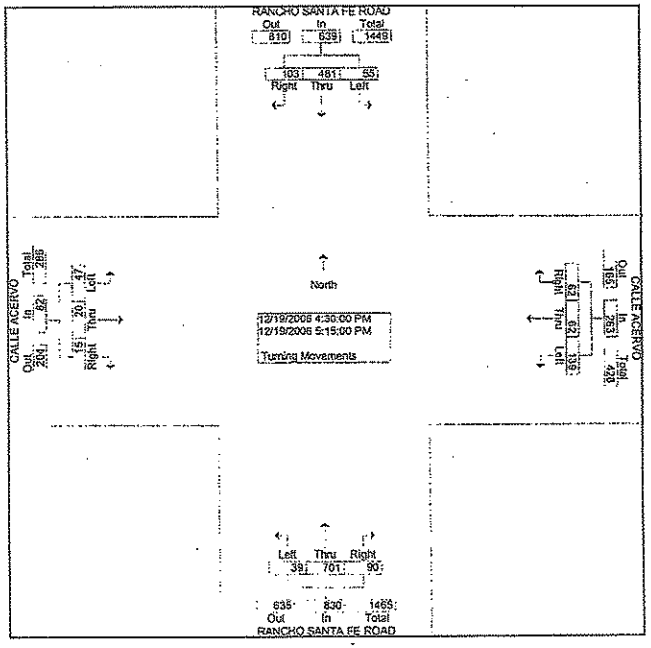

AA 4P
EX

APPENDIX A (Cont.)

- **Level of Service Criteria (4 Pages)**
- **Existing Intersection LOS Worksheets**
- **Existing Plus Project Intersection LOS Worksheets**

TABLE 3-5

Existing Intersection Level of Service Summary - HCM Method
(Intersections Outside Carlsbad)

	Intersection	AM Peak Hour		PM Peak Hour	
		Delay	LOS	Delay	LOS
1	Rancho Santa Fe Rd. at San Marcos Blvd. (01/11/06) P	36.8	D	47.9	D
2	Rancho Santa Fe Rd. at Lake San Marcos Dr. (01/11/06) P	10.5	B	12.9	B
3	Rancho Santa Fe Rd. at Camino Del Arroyo Dr. (01/11/06) P	10.0	A	9.8	A
4	Rancho Santa Fe Rd. at Island Dr. (01/11/06) P	3.1	A	3.2	A
10	Rancho Santa Fe Rd. at Melrose Dr. (8/26/07) C	30.9	C	33.9	C
17	Rancho Santa Fe Rd. at El Camino Del Norte ① (01/11/06) P	39.3	E	29.3	D
28	I-5 SB Ramps at Leucadia Blvd. (01/14/06) P	18.6	B	18.7	B
29	I-5 NB Ramps at Leucadia Blvd. (01/14/06) P	14.2	B	18.0	B
30	Clark Ave. at Leucadia Blvd. (01/03/06) P	29.7	C	11.9	B
31	Saxony Rd. at Leucadia Blvd. (01/03/06) P	30.6	C	34.0	C
32	Sidonia St. at Leucadia Blvd. (01/03/06) P	11.2	B	11.2	B
33	Quail Gardens at Leucadia Blvd. (01/04/06) P	32.3	C	25.2	C
34	Garden View Rd. at Leucadia Blvd. (01/04/06) P	25.1	C	30.5	C
35	Town Center Pl. at Leucadia Blvd. (01/04/06) P	19.9	B	25.5	C
36	El Camino Real at Leucadia Blvd. (01/18/06) P	39.7	D	43.1	D
37	Amargosa Dr. at Olivenhain Rd. (01/10/06) P	25.1	C	17.6	B
40	Melrose Dr. at San Elijo Rd. (01/18/06) P	26.7	C	25.6	C

Legend:

① = Existing All-Way Stop Sign Control.
(xx/yy/zz) = Traffic Count Date

Source of Traffic Counts:

P = Priority Engineering
C = City of Carlsbad

APPENDIX A, B & C

INPUTS AND ASSUMPTIONS
FOR INTERSECTION CAPACITY ANALYSIS
USING THE HIGHWAY CAPACITY MANUAL (HCM) METHOD

- ☐ Arrival Type = 3-5 (Arrival type 5 used at all locations).
- ☐ Cycle Length (C) = Min. 120-140 seconds (as determined by City Traffic Engineer).
- ☐ Ideal Saturation Flow Rate for HCM software = 1,800 pcphpl left-turns, 2,000 pcphpl through movements.
- ☐ Yellow Interval = 4 sec.
- ☐ All – Red = 1 sec.
- ☐ Minimum Heavy Vehicles = 2%.
- ☐ Peak Hour Factor (PHF) = 0.95.
- ☐ I-Value = 1.00 (If lower than 1.00 additional data provided to quantify the upstream V/C of contributing lane groups).

Note: For major intersections, an extra data page is provided showing the Saturation Flow Rate and I-Value used.

A
1 EX

SHORT REPORT

General Information		Site Information	
Analyst	USAI	Intersection	RHO. STA. FE. RD./SAN MARCOS B
Agency or Co.	USAI	Area Type	All other areas
Date Performed	09/05/08	Jurisdiction	SAN MARCOS
Time Period	AM PEAK HOUR	Analysis Year	EXISTING

Volume and Timing Input

	EB			WB			NB			SB		
	LT	TH	RT	LT	TH	RT	LT	TH	RT	LT	TH	RT
Num. of Lanes	2	2	1	2	2	0	2	2	0	1	2	1
Lane group	L	T	R	L	TR		L	T		L	T	R
Volume (vph)	258	513	56	591	786	67	121	446		51	669	283
% Heavy veh	2	2	2	2	2	2	2	2		2	2	2
PHF	0.95	0.95	0.95	0.95	0.95	0.95	0.95	0.95		0.95	0.95	0.95
Actuated (P/A)	A	A	A	A	A	A	A	A		A	A	A
Startup lost time	2.0	2.0	2.0	2.0	2.0		2.0	2.0		2.0	2.0	2.0
Ext. eff. green	2.0	2.0	2.0	2.0	2.0		2.0	2.0		2.0	2.0	2.0
Arrival type	5	5	5	5	5		5	5		5	5	5
Unit Extension	3.0	3.0	3.0	3.0	3.0		3.0	3.0		3.0	3.0	3.0
Ped/Bike/RTOR Volume	0	0	0	0	0	0	0			0	0	130
Lane Width	12.0	12.0	12.0	12.0	12.0		12.0	12.0		12.0	12.0	12.0
Parking/Grade/Parking	N	0	N	N	0	N	N	0	N	N	0	N
Parking/hr												
Bus stops/hr	0	0	0	0	0		0	0		0	0	0
Unit Extension	3.0	3.0	3.0	3.0	3.0		3.0	3.0		3.0	3.0	3.0

Phasing	Excl. Left	WB Only	Thru & RT	04	Excl. Left	Thru & RT	07	08
Timing	G = 18.0	G = 10.0	G = 25.0	G = 0.0	G = 17.0	G = 25.0	G = 0.0	G = 0.0
	Y = 5	Y = 5	Y = 5	Y =	Y = 5	Y = 5	Y = 0	Y =

Duration of Analysis (hrs) = 0.25 | Cycle Length C = 120.0

Lane Group Capacity, Control Delay, and LOS Determination

	EB			WB			NB			SB		
Adj. flow rate	272	540	59	622	898		127	469		54	704	161
Lane group cap.	488	778	588	895	1230		461	778		237	778	312
v/c ratio	0.56	0.69	0.10	0.69	0.73		0.28	0.60		0.23	0.90	0.52
Green ratio	0.15	0.21	0.39	0.28	0.33		0.14	0.21		0.14	0.21	0.21
Unif. delay d1	47.3	44.0	23.1	39.0	35.2		46.0	43.0		45.7	46.3	42.1
Delay factor k	0.15	0.26	0.11	0.26	0.29		0.11	0.19		0.11	0.43	0.12
Increm. delay d2	1.4	2.7	0.1	2.4	2.2		0.3	1.3		0.5	14.1	1.5
PF factor	0.882	0.825	0.571	0.747	0.667		0.890	0.825		0.890	0.825	0.825
Control delay	43.2	38.9	13.3	31.5	25.7		41.3	36.8		41.1	52.3	36.2
Lane group LOS	D	D	B	C	C		D	D		D	D	D
Apprch. delay	38.5			28.1			37.7			48.8		
Approach LOS	D			C			D			D		
Intersec. delay	36.8			Intersection LOS						D		

HCS2000™ Copyright © 2000 University of Florida, All Rights Reserved Version 4.1f

HCS2000: Signalized Intersections Release 4.1f

Urban Systems Inc.
4540 Kearny Villa Rd.
San Diego Ca 92123

Phone: 858-560-4911 Fax:
E-Mail:

1-A
EX

OPERATIONAL ANALYSIS

Analyst: USAI
Agency/Co.: USAI
Date Performed: 09/05/08
Analysis Time Period: AM PEAK HOUR
Intersection: RHO. STA. FE. RD./SAN MARCOS B
Area Type: All other areas
Jurisdiction: SAN MARCOS
Analysis Year: EXISTING
Project ID: LA COSTA
E/W St: SAN MARCOS DR. N/S St: RANCHO SANTA FE RD.

VOLUME DATA

	Eastbound			Westbound			Northbound			Southbound		
	L	T	R	L	T	R	L	T	R	L	T	R
Volume	258	513	56	591	786	67	121	446		51	669	283
% Heavy Veh	2	2	2	2	2	2	2	2		2	2	2
PHF	0.95	0.95	0.95	0.95	0.95	0.95	0.95	0.95		0.95	0.95	0.95
PK 15 Vol	68	135	15	156	207	18	32	117		13	176	74
Hi Ln Vol												
% Grade		0			0			0			0	
Ideal Sat	1800	2000	1800	1800	2000		1800	2000		1800	2000	1800
ParkExist												
NumPark												
No. Lanes	2	2	1	2	2	0	2	2	0	1	2	1
LGConfig	L	T	R	L	TR		L	T		L	T	R
Lane Width	12.0	12.0	12.0	12.0	12.0		12.0	12.0		12.0	12.0	12.0
RTOR Vol			0			0						130
Adj Flow	272	540	59	622	898		127	469		54	704	161
%InSharedLn												
Prop LTs		0.000			0.000			0.000			0.000	
Prop RTs		0.000	1.000		0.079			0.000			0.000	1.000
Peds Bikes	0		0	0		0	0			0		0
Buses	0	0	0	0	0		0	0		0	0	0
%InProtPhase			0.0			0.0						

Duration 0.25 Area Type: All other areas

OPERATING PARAMETERS

	Eastbound			Westbound			Northbound			Southbound		
	L	T	R	L	T	R	L	T	R	L	T	R
Init Unmet	0.0	0.0	0.0	0.0	0.0		0.0	0.0		0.0	0.0	0.0
Arriv. Type	5	5	5	5	5		5	5		5	5	5
Unit Ext.	3.0	3.0	3.0	3.0	3.0		3.0	3.0		3.0	3.0	3.0
I Factor		1.000			1.000			1.000			1.000	
Lost Time	2.0	2.0	2.0	2.0	2.0		2.0	2.0		2.0	2.0	2.0
Ext of g	2.0	2.0	2.0	2.0	2.0		2.0	2.0		2.0	2.0	2.0
Ped Min g		3.2			3.2			3.2			3.2	

PRIORITY ENGINEERING, INC.

INTERSECTION TURNING MOVEMENTS REDUCTION SHEET

:ATION: Rancho Santa Fe Rd and San Marcos Blvd
Carlsbad, CA

DATE OF COUNT: Wed. 1/11/06
TIME OF COUNT: AM Peak

COUNTED BY: TB
WEATHER: Clear

TIME INTERVAL ENDING AT	FROM NORTH ON (SB) Rancho Santa Fe Rd				FROM SOUTH ON (NB) Rancho Santa Fe Rd				FROM EAST ON (WB) San Marcos Blvd				FROM WEST ON (EB) San Marcos Blvd				INTERVAL TOTALS
	Right	Thru	Left	Peds	Right	Thru	Left	Peds	Right	Thru	Left	Peds	Right	Thru	Left	Peds	
07:15 AM	89	171	5	0	129	72	42	0	13	231	112	0	8	135	52	0	1059
07:30 AM	92	210	9	0	178	111	26	0	12	203	135	0	14	137	51	0	1178
07:45 AM	65	164	10	0	186	118	32	0	37	147	116	0	7	140	62	0	1085
08:00 AM	60	158	20	0	149	102	22	0	9	237	137	0	12	110	50	0	1066
08:15 AM	65	137	12	0	150	115	41	0	9	200	203	0	23	126	85	0	1176
08:30 AM	86	131	14	0	150	90	26	0	11	192	158	0	21	155	74	0	1108
08:45 AM	61	109	11	0	145	85	21	0	18	210	133	0	41	146	77	0	1074
09:00 AM	74	121	24	0	109	98	32	0	30	168	198	0	23	152	84	0	1073
PEAK HOUR TOTALS	283	669	51	0	653	445	121	0	67	787	591	0	56	513	258	0	INTERSECTION
ALL MOVEMENTS	1003				1230				1445				827				4505
PEAK HOUR FACTOR	0.81				0.92				0.88				0.85				0.96

)S = Pedestrians Across Intersection Leg
F = Peak Hour Factor

AM PEAK HOUR: 7:15 AM TO 8:15 AM

)UCED BY: JR

DATE OF REDUCTION: 1/15/2006

PRIORITY ENGINEERING, INC.

INTERSECTION TURNING MOVEMENTS REDUCTION SHEET

TURNING MOVEMENTS DIAGRAM

AM PEAK HOUR ENDING AT 8:15 AM

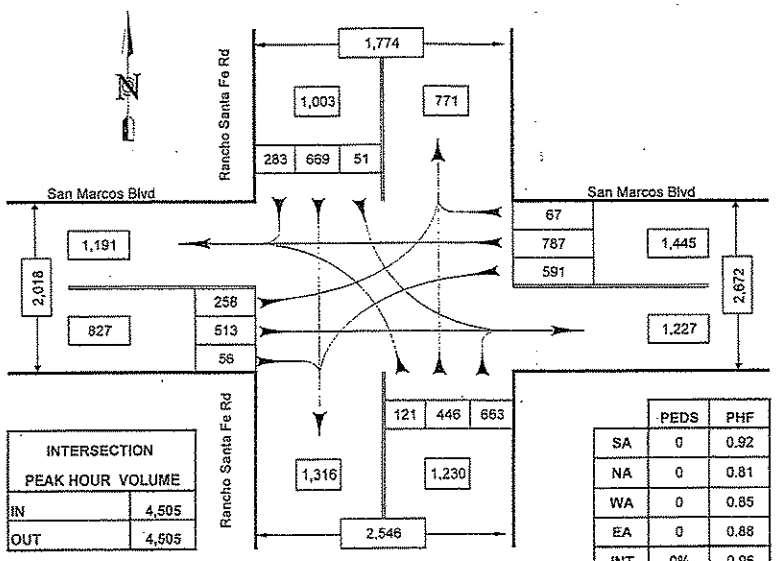

INTERSECTION PEAK HOUR VOLUME	
IN	4,505
OUT	4,505

	PEDS	PHF
SA	0	0.92
NA	0	0.81
WA	0	0.85
EA	0	0.88
INT	0%	0.96

PEDS = Pedestrians
PHF = Peak Hour Factor

Rancho Santa Fe Rd and San Marcos Blvd

Carlsbad, CA

COUNTED BY: TB
REDUCED BY: JR
DATE: 1/15/2006

DATE OF COUNT: 1/11/06
TIME OF COUNT: AM Peak
WEATHER: Clear

1-AEX

1-P EX

SHORT REPORT

General Information		Site Information	
Analyst	USAI	Intersection	RHO. STA. FE. RD./SAN MARCOS B
Agency or Co.	USAI	Area Type	All other areas
Date Performed	09/05/08	Jurisdiction	SAN MARCOS
Time Period	PM PEAK HOUR	Analysis Year	EXISTING

Volume and Timing Input

	EB			WB			NB			SB		
	LT	TH	RT	LT	TH	RT	LT	TH	RT	LT	TH	RT
Num. of Lanes	2	2	1	2	2	0	2	2	0	1	2	1
Lane group	L	T	R	L	TR		L	T		L	T	R
Volume (vph)	269	1048	58	692	536	71	133	748		144	532	122
% Heavy veh	2	2	2	2	2	2	2	2		2	2	2
PHF	0.95	0.95	0.95	0.95	0.95	0.95	0.95	0.95		0.95	0.95	0.95
Actuated (P/A)	A	A	A	A	A	A	A	A		A	A	A
Startup lost time	2.0	2.0	2.0	2.0	2.0		2.0	2.0		2.0	2.0	2.0
Ext. eff. green	2.0	2.0	2.0	2.0	2.0		2.0	2.0		2.0	2.0	2.0
Arrival type	5	5	5	5	5		5	5		5	5	5
Unit Extension	3.0	3.0	3.0	3.0	3.0		3.0	3.0		3.0	3.0	3.0
Ped/Bike/RTOR Volume	0	0	0	0	0	0	0			0	0	0
Lane Width	12.0	12.0	12.0	12.0	12.0		12.0	12.0		12.0	12.0	12.0
Parking/Grade/Parking	N	0	N	N	0	N	N	0	N	N	0	N
Parking/hr												
Bus stops/hr	0	0	0	0	0		0	0		0	0	0
Unit Extension	3.0	3.0	3.0	3.0	3.0		3.0	3.0		3.0	3.0	3.0

Phasing	Excl. Left	Thru & RT	03	04	Excl. Left	Thru & RT	07	08
Timing	G = 24.0	G = 38.0	G = 0.0	G =	G = 13.0	G = 25.0	G = 0.0	G = 0.0
	Y = 5	Y = 5	Y =	Y =	Y = 5	Y = 5	Y = 0	Y =

Duration of Analysis (hrs) = 0.25 Cycle Length C = 120.0

Lane Group Capacity, Control Delay, and LOS Determination

	EB			WB			NB			SB		
Adj. flow rate	283	1103	61	728	639		140	787		152	560	128
Lane group cap.	651	1182	700	762	1045		353	778		182	778	312
v/c ratio	0.43	0.93	0.09	0.96	0.61		0.40	1.01		0.84	0.72	0.41
Green ratio	0.20	0.32	0.47	0.20	0.32		0.11	0.21		0.11	0.21	0.21
Unif. delay d1	42.1	39.8	17.8	47.5	34.7		49.8	47.5		52.4	44.2	41.1
Delay factor k	0.11	0.45	0.11	0.47	0.20		0.11	0.50		0.37	0.28	0.11
Increm. delay d2	0.5	13.2	0.1	22.3	1.1		0.7	35.2		27.2	3.3	0.9
PF factor	0.833	0.691	0.417	0.833	0.691		0.919	0.825		0.919	0.825	0.825
Control delay	35.5	40.7	7.5	61.9	25.1		46.5	74.3		75.4	39.7	34.8
Lane group LOS	D	D	A	E	C		D	E		E	D	C
Apprch. delay	38.3			44.7			70.1			45.4		
Approach LOS	D			D			E			D		
Intersec. delay	47.9			Intersection LOS						D		

HCS2000™ Copyright © 2000 University of Florida, All Rights Reserved Version 4.1f

HCS2000: Signalized Intersections Release 4.1f

Urban Systems Inc.
4540 Kearny Villa Rd.
San Diego Ca 92123

Phone: 858-560-4911 Fax:
E-Mail:

1-P
EX

OPERATIONAL ANALYSIS

Analyst: USAI
Agency/Co.: USAI
Date Performed: 09/05/08
Analysis Time Period: PM PEAK HOUR
Intersection: RHO. STA. FE. RD./SAN MARCOS B
Area Type: All other areas
Jurisdiction: SAN MARCOS
Analysis Year: EXISTING
Project ID: LA COSTA TOWN SQUARE
E/W St: SAN MARCOS DR. N/S St: RANCHO SANTA FE RD.

VOLUME DATA

	Eastbound			Westbound			Northbound			Southbound		
	L	T	R	L	T	R	L	T	R	L	T	R
Volume	269	1048	58	692	536	71	133	748		144	532	122
% Heavy Veh	2	2	2	2	2	2	2	2		2	2	2
PHF	0.95	0.95	0.95	0.95	0.95	0.95	0.95	0.95		0.95	0.95	0.95
PK 15 Vol	71	276	15	182	141	19	35	197		38	140	32
Hi Ln Vol												
% Grade		0			0			0			0	
Ideal Sat	1800	2000	1800	2000	1800		1800	2000		1800	2000	1800
ParkExist												
NumPark												
No. Lanes	2	2	1	2	2	0	2	2	0	1	2	1
LGConfig	L	T	R	L	TR		L	T		L	T	R
Lane Width	12.0	12.0	12.0	12.0	12.0		12.0	12.0		12.0	12.0	12.0
RTOR Vol			0			0						0
Adj Flow	283	1103	61	728	639		140	787		152	560	128
%InSharedLn												
Prop LTs		0.000			0.000			0.000			0.000	
Prop RTs		0.000	1.000		0.117			0.000			0.000	1.000
Peds Bikes	0		0	0		0	0			0		0
Buses	0	0	0	0	0		0	0		0	0	0
%InProtPhase			0.0									

Duration 0.25 Area Type: All other areas

OPERATING PARAMETERS

	Eastbound			Westbound			Northbound			Southbound		
	L	T	R	L	T	R	L	T	R	L	T	R
Init Unmet	0.0	0.0	0.0	0.0	0.0		0.0	0.0		0.0	0.0	0.0
Arriv. Type	5	5	5	5	5		5	5		5	5	5
Unit Ext.	3.0	3.0	3.0	3.0	3.0		3.0	3.0		3.0	3.0	3.0
I Factor		1.000			1.000			1.000			1.000	
Lost Time	2.0	2.0	2.0	2.0	2.0		2.0	2.0		2.0	2.0	2.0
Ext of g	2.0	2.0	2.0	2.0	2.0		2.0	2.0		2.0	2.0	2.0
Ped Min g		3.2			3.2			3.2			3.2	

PRIORITY ENGINEERING, INC.

INTERSECTION TURNING MOVEMENTS REDUCTION SHEET

TION: Rancho Santa Fe Rd and San Marcos Blvd
Carlsbad, CA

DATE OF COUNT: Wed. 1/11/06
TIME OF COUNT: PM Peak

COUNTED BY: TB/JR
WEATHER: Clear

TIME INTERVAL ENDING AT	FROM NORTH ON (SB) Rancho Santa Fe Rd				FROM SOUTH ON (NB) Rancho Santa Fe Rd				FROM EAST ON (WB) San Marcos Blvd				FROM WEST ON (EB) San Marcos Blvd				INTERVAL TOTALS
	Right	Thru	Left	Peds	Right	Thru	Left	Peds	Right	Thru	Left	Peds	Right	Thru	Left	Peds	
04:15 PM	38	119	39	0	191	195	20	0	11	130	145	0	18	265	82	0	1253
04:30 PM	25	138	42	0	202	200	24	0	10	106	166	0	18	253	75	0	1259
04:45 PM	32	145	31	0	219	188	36	0	16	168	157	0	17	298	59	0	1396
05:00 PM	29	111	41	0	225	169	30	0	29	118	180	0	6	229	65	0	1232
05:15 PM	36	138	30	0	210	191	43	0	16	124	179	0	17	268	70	0	1322
05:30 PM	26	138	34	0	204	159	23	0	13	156	118	0	10	266	59	0	1206
05:45 PM	25	125	35	0	178	101	15	0	17	113	196	0	20	267	91	0	1183
06:00 PM	23	107	32	0	199	123	25	0	42	119	132	0	12	248	78	0	1140
PEAK HOUR TOTALS	122	532	144	0	856	748	133	0	71	536	692	0	58	1048	269	0	INTERSECTION
ALL MOVEMENTS	798				1737				1299				1375				5209
PEAK HOUR FACTOR	0.96				0.98				0.88				0.92				0.93

= Pedestrians Across Intersection Leg
Peak Hour Factor

PM PEAK HOUR: 4:15 PM TO 5:15 PM

CED BY: JR

DATE OF REDUCTION: 1/15/2006

PRIORITY ENGINEERING, INC.

INTERSECTION TURNING MOVEMENTS REDUCTION SHEET

TURNING MOVEMENTS DIAGRAM

PM PEAK HOUR ENDING AT 5:15 PM

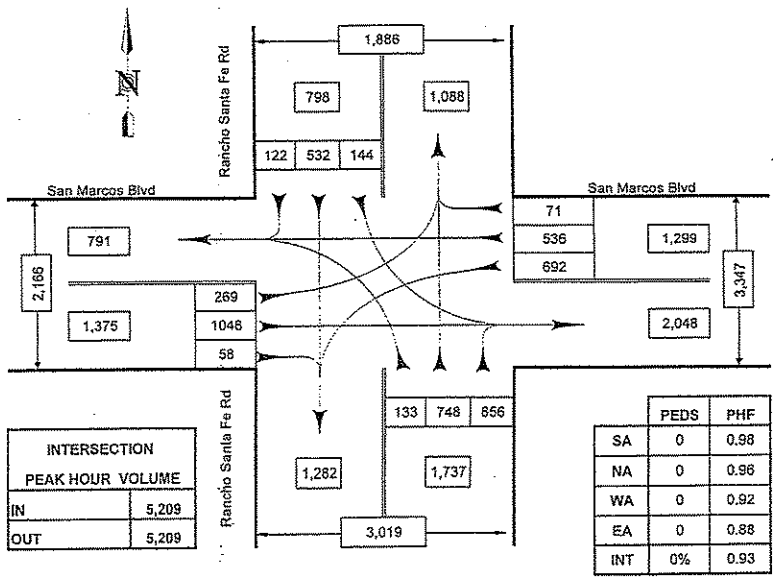

INTERSECTION PEAK HOUR VOLUME	
IN	5,209
OUT	5,209

	PEDS	PHF
SA	0	0.98
NA	0	0.96
WA	0	0.92
EA	0	0.88
INT	0%	0.93

PEDS = Pedestrians
PHF = Peak Hour Factor

Rancho Santa Fe Rd and San Marcos Blvd

Carlsbad, CA

COUNTED BY: TB/JR
REDUCED BY: JR
DATE: 1/15/2006

DATE OF COUNT: 1/11/06
TIME OF COUNT: PM Peak
WEATHER: Clear

2-A EX

SHORT REPORT

General Information		Site Information	
Analyst	USAI	Intersection	RHO. STA. FE DR./LAKE SAN MARC
Agency or Co.	USAI	Area Type	All other areas
Date Performed	09/05/08	Jurisdiction	SAN MARCOS
Time Period	AM PEAK HOUR	Analysis Year	EXISTING

Volume and Timing Input

	EB			WB			NB			SB		
	LT	TH	RT	LT	TH	RT	LT	TH	RT	LT	TH	RT
Num. of Lanes	0	0	0	1	0	1	0	2	0	1	2	0
Lane group				L		R		TR		L	T	
Volume (vph)				184		141		1119	73	121	1198	
% Heavy veh				2		2		2	2	2	2	
PHF				0.95		0.95		0.95	0.95	0.95	0.95	
Actuated (P/A)				A		A		A	A	A	A	
Startup lost time				2.0		2.0		2.0		2.0	2.0	
Ext. eff. green				2.0		2.0		2.0		2.0	2.0	
Arrival type				5		5		5		5	5	
Unit Extension				3.0		3.0		3.0		3.0	3.0	
Ped/Bike/RTOR Volume	0			0		0	0	0	0			
Lane Width				10.0		14.0		15.0		10.0	15.0	
Parking/Grade/Parking	N		N	N	0	N	N	0	N	N	0	N
Parking/hr												
Bus stops/hr				0		0		0		0	0	
Unit Extension				3.0		3.0		3.0		3.0	3.0	

Phasing	WB Only	02	03	04	SB Only	Thru & RT	07	08
Timing	G = 24.0	G =	G =	G =	G = 23.0	G = 58.0	G =	G =
	Y = 5	Y =	Y =	Y =	Y = 5	Y = 5	Y =	Y =

Duration of Analysis (hrs) = 0.25 Cycle Length C = 120.0

Lane Group Capacity, Control Delay, and LOS Determination

	EB			WB			NB			SB		
Adj. flow rate				194		148		1255		127	1261	
Lane group cap.				313		320		1967		300	2943	
v/c ratio				0.62		0.46		0.64		0.42	0.43	
Green ratio				0.20		0.20		0.48		0.19	0.72	
Unif. delay d1				43.8		42.3		23.2		42.7	7.0	
Delay factor k				0.20		0.11		0.22		0.11	0.11	
Increm. delay d2				3.7		1.1		0.7		1.0	0.1	
PF factor				0.833		0.833		0.376		0.842	0.176	
Control delay				40.3		36.3		9.4		36.9	1.3	
Lane group LOS				D		D		A		D	A	
Apprch. delay				38.6			9.4			4.6		
Approach LOS				D			A			A		
Intersec. delay	10.5			Intersection LOS						B		

HCS2000™ Copyright © 2000 University of Florida, All Rights Reserved Version 4.1f

PRIORITY ENGINEERING, INC.

INTERSECTION TURNING MOVEMENTS REDUCTION SHEET

CATION: Rancho Santa Fe Rd and Lake San Marcos Dr
Carlsbad, CA

DATE OF COUNT: Wed. 1/11/06
TIME OF COUNT: AM Peak

COUNTED BY: VR
WEATHER: Clear

TIME INTERVAL ENDING AT	FROM NORTH ON (SB) Rancho Santa Fe Rd				FROM SOUTH ON (NB) Rancho Santa Fe Rd				FROM EAST ON (WB) Lake San Marcos Dr				FROM WEST ON (EB) Lake San Marcos Dr				INTERVAL TOTALS
	Right	Thru	Left	Peds	Right	Thru	Left	Peds	Right	Thru	Left	Peds	Right	Thru	Left	Peds	
07:15 AM	0	389	30	0	16	256	0	0	18	0	51	0	0	0	0	0	760
07:30 AM	0	283	22	0	17	282	0	0	37	0	48	0	0	0	0	0	689
07:45 AM	0	278	34	0	29	335	0	0	59	0	45	0	0	0	0	0	780
08:00 AM	0	248	35	0	11	246	0	0	27	0	40	0	0	0	0	0	607
08:15 AM	0	235	28	0	39	254	0	0	31	0	35	0	0	0	0	0	622
08:30 AM	0	228	30	0	15	269	0	0	30	0	27	0	0	0	0	0	599
08:45 AM	0	218	30	0	18	238	0	0	43	0	31	0	0	0	0	0	598
09:00 AM	0	193	31	0	13	208	0	0	43	0	24	0	0	0	0	0	512
PEAK HOUR TOTALS	0	1198	121	0	73	1119	0	0	141	0	184	0	0	0	0	0	INTERSECTION
ALL MOVEMENTS	1319				1192				325				0				2836
PEAK HOUR FACTOR	0.79				0.82				0.78				#DIV/0!				0.91

DS = Pedestrians Across Intersection Leg
F = Peak Hour Factor

AM PEAK HOUR: 7:00 AM TO 8:00 AM

DUCED BY: JR

DATE OF REDUCTION: 1/14/2006

PRIORITY ENGINEERING, INC.

INTERSECTION TURNING MOVEMENTS REDUCTION SHEET

TURNING MOVEMENTS DIAGRAM

AM PEAK HOUR ENDING AT 8:00 AM

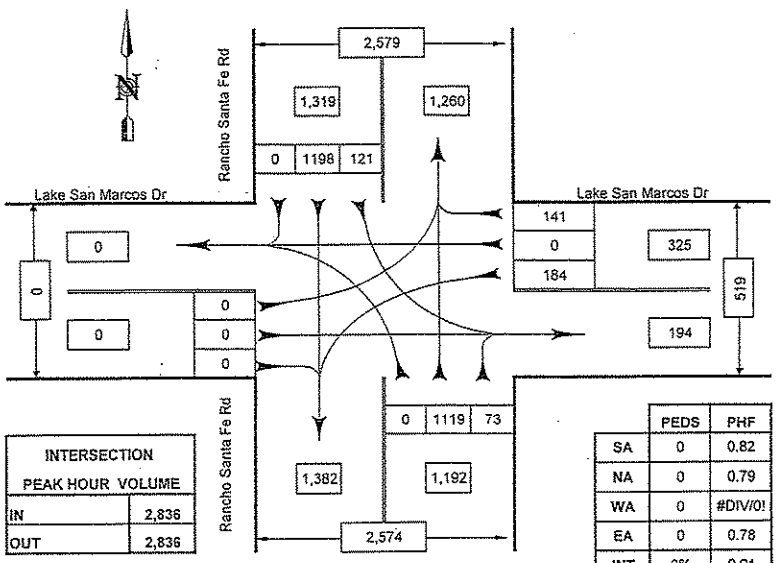

INTERSECTION PEAK HOUR VOLUME	
IN	2,836
OUT	2,836

	PEDS	PHF
SA	0	0.82
NA	0	0.79
WA	0	#DIV/0!
EA	0	0.78
INT	0%	0.91

PEDS = Pedestrians
PHF = Peak Hour Factor

Rancho Santa Fe Rd and Lake San Marcos Dr

Carlsbad, CA

COUNTED BY: VR
REDUCED BY: JR
DATE: 1/14/2006

DATE OF COUNT: 1/11/06
TIME OF COUNT: AM Peak
WEATHER: Clear

2-A
EX

2-P EX

SHORT REPORT

General Information		Site Information	
Analyst	USAI	Intersection	RHO. STA. FE DR./LAKE SAN MARC
Agency or Co.	USAI	Area Type	All other areas
Date Performed	09/05/08	Jurisdiction	SAN MARCOS
Time Period	PM PEAK HOUR	Analysis Year	EXISTING

Volume and Timing Input

	EB			WB			NB			SB		
	LT	TH	RT	LT	TH	RT	LT	TH	RT	LT	TH	RT
Num. of Lanes	0	0	0	1	0	1	0	2	0	1	2	0
Lane group				L		R		TR		L	T	
Volume (vph)				116		135		1438	153	265	992	
% Heavy veh				2		2		2	2	2	2	
PHF				0.95		0.95		0.95	0.95	0.95	0.95	
Actuated (P/A)				A		A		A	A	A	A	
Startup lost time				2.0		2.0		2.0		2.0	2.0	
Ext. eff. green				2.0		2.0		2.0		2.0	2.0	
Arrival type				5		5		5		5	5	
Unit Extension				3.0		3.0		3.0		3.0	3.0	
Ped/Bike/RTOR Volume	0			0		0	0	0	0			
Lane Width				10.0		14.0		15.0		10.0	15.0	
Parking/Grade/Parking	N		N	N	0	N	N	0	N	N	0	N
Parking/hr												
Bus stops/hr				0		0		0		0	0	
Unit Extension				3.0		3.0		3.0		3.0	3.0	

Phasing	WB Only	02	03	04	SB Only	Thru & RT	07	08
Timing	G = 15.0	G =	G =	G =	G = 23.0	G = 58.0	G =	G =
	Y = 5	Y =	Y =	Y =	Y = 5	Y = 5	Y =	Y =
Duration of Analysis (hrs) = 0.25						Cycle Length C = 111.0		

Lane Group Capacity, Control Delay, and LOS Determination

	EB			WB			NB			SB		
Adj. flow rate				122		142		1675		279	1044	
Lane group cap.				211		216		2115		324	3182	
v/c ratio				0.58		0.66		0.79		0.86	0.33	
Green ratio				0.14		0.14		0.52		0.21	0.77	
Unif. delay d1				45.0		45.6		21.6		42.5	3.8	
Delay factor k				0.17		0.23		0.34		0.39	0.11	
Increm. delay d2				3.9		7.1		2.1		20.4	0.1	
PF factor				0.896		0.896		0.270		0.826	0.222	
Control delay				44.3		47.9		8.0		55.4	0.9	
Lane group LOS				D		D		A		E	A	
Apprch. delay				46.2			8.0			12.4		
Approach LOS				D			A			B		
Intersec. delay	12.9			Intersection LOS						B		

HCS2000™ Copyright © 2000 University of Florida, All Rights Reserved Version 4.1f

PRIORITY ENGINEERING, INC.

INTERSECTION TURNING MOVEMENTS REDUCTION SHEET

CATION: Rancho Santa Fe Rd and Lake San Marcos Dr
Carlsbad, CA

DATE OF COUNT: Wed. 1/11/06
TIME OF COUNT: PM Peak

COUNTED BY: VR
WEATHER: Clear

TIME INTERVAL ENDING AT	FROM NORTH ON (SB) Rancho Santa Fe Rd				FROM SOUTH ON (NB) Rancho Santa Fe Rd				FROM EAST ON (WB) Lake San Marcos Dr				FROM WEST ON (EB) N/A				INTERVAL TOTALS
	Right	Thru	Left	Peds	Right	Thru	Left	Peds	Right	Thru	Left	Peds	Right	Thru	Left	Peds	
04:15 PM	0	266	72	0	25	395	0	0	35	0	27	0	0	0	0	0	820
04:30 PM	0	217	72	0	47	345	0	0	37	0	29	0	0	0	0	0	747
04:45 PM	0	202	71	0	28	341	0	0	40	0	35	0	0	0	0	0	717
05:00 PM	0	235	67	0	47	352	0	0	27	0	32	0	0	0	0	0	760
05:15 PM	0	275	68	0	37	361	0	0	45	0	40	0	0	0	0	0	826
05:30 PM	0	260	59	0	41	384	0	0	23	0	9	0	0	0	0	0	796
05:45 PM	0	232	49	0	33	294	0	0	28	0	20	0	0	0	0	0	656
06:00 PM	0	241	41	0	28	297	0	0	17	0	21	0	0	0	0	0	645
PEAK HOUR TOTALS	0	992	265	0	153	1438	0	0	135	0	116	0	0	0	0	0	INTERSECTION
ALL MOVEMENTS	1257				1591				251				0				3099
PEAK HOUR FACTOR	0.92				0.94				0.74				#DIV/0!				0.94

DS = Pedestrians Across Intersection Leg
HF = Peak Hour Factor

PM PEAK HOUR: 4:30 PM TO 5:30 PM

EDUCED BY: JR

DATE OF REDUCTION: 1/5/2006

PRIORITY ENGINEERING, INC.

INTERSECTION TURNING MOVEMENTS REDUCTION SHEET

TURNING MOVEMENTS DIAGRAM

PM PEAK HOUR ENDING AT 5:30 PM

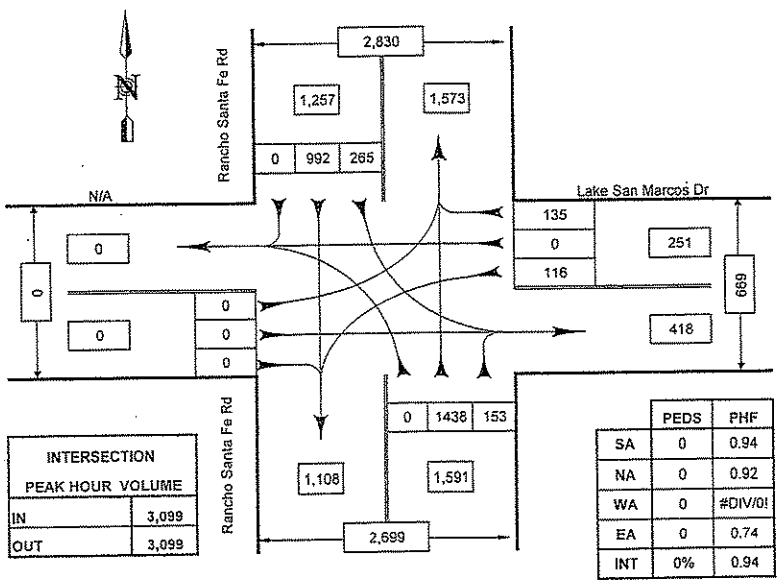

INTERSECTION PEAK HOUR VOLUME	
IN	3,099
OUT	3,099

	PEDS	PHF
SA	0	0.94
NA	0	0.92
WA	0	#DIV/0!
EA	0	0.74
INT	0%	0.94

PEDS = Pedestrians
PHF = Peak Hour Factor

Rancho Santa Fe Rd and Lake San Marcos Dr

Carlsbad, CA

COUNTED BY: VR
REDUCED BY: JR
DATE: 1/5/2006

DATE OF COUNT: 1/11/06
TIME OF COUNT: PM Peak
WEATHER: Clear

EX 2

3A EX

SHORT REPORT

General Information		Site Information	
Analyst	USAI	Intersection	RHO. STA. FE DR./CAM DEL ARROY
Agency or Co.	USAI	Area Type	All other areas
Date Performed	09/05/08	Jurisdiction	SAN MARCOS
Time Period	AM PEAK HOUR	Analysis Year	EXISTING

Volume and Timing Input

	EB			WB			NB			SB		
	LT	TH	RT	LT	TH	RT	LT	TH	RT	LT	TH	RT
Num. of Lanes	0	1	0	0	1	0	1	2	0	1	2	0
Lane group		LTR			LTR		L	TR		L	TR	
Volume (vph)	30	3	56	98	2	39	18	1191	28	48	1354	15
% Heavy veh	2	2	2	2	2	2	2	2	2	2	2	2
PHF	0.95	0.95	0.95	0.95	0.95	0.95	0.95	0.95	0.95	0.95	0.95	0.95
Actuated (P/A)	A	A	A	A	A	A	A	A	A	A	A	A
Startup lost time		2.0			2.0		2.0	2.0		2.0	2.0	
Ext. eff. green		2.0			2.0		2.0	2.0		2.0	2.0	
Arrival type		5			5		5	5		5	5	
Unit Extension		3.0			3.0		3.0	3.0		3.0	3.0	
Ped/Bike/RTOR Volume	0	0	0	0	0	0	0	0	0	0	0	0
Lane Width		12.0			12.0		12.0	12.0		12.0	12.0	
Parking/Grade/Parking	N	0	N	N	0	N	N	0	N	N	0	N
Parking/hr												
Bus stops/hr		0			0		0	0		0	0	
Unit Extension		3.0			3.0		3.0	3.0		3.0	3.0	

Phasing	EW Perm	02	03	04	Excl. Left	Thru & RT	07	08
Timing	G = 15.0	G =	G =	G =	G = 18.0	G = 52.0	G =	G =
	Y = 5	Y =	Y =	Y =	Y = 5	Y = 5	Y =	Y =
Duration of Analysis (hrs) = 0.25						Cycle Length C = 100.0		

Lane Group Capacity, Control Delay, and LOS Determination

	EB			WB			NB			SB		
Adj. flow rate		94			146		19	1283		51	1441	
Lane group cap.		211			192		302	1935		302	1938	
v/c ratio		0.45			0.76		0.06	0.66		0.17	0.74	
Green ratio		0.15			0.15		0.18	0.52		0.18	0.52	
Unif. delay d1		38.7			40.8		34.0	17.6		34.7	18.8	
Delay factor k		0.11			0.31		0.11	0.24		0.11	0.30	
Increm. delay d2		1.5			16.2		0.1	0.9		0.3	1.6	
PF factor		0.882			0.882		0.854	0.278		0.854	0.278	
Control delay		35.7			52.2		29.1	5.7		29.9	6.8	
Lane group LOS		D			D		C	A		C	A	
Apprch. delay	35.7			52.2			6.1			7.6		
Approach LOS	D			D			A			A		
Intersec. delay	10.0			Intersection LOS						A		

HCS2000™ Copyright © 2000 University of Florida, All Rights Reserved Version 4.1f

PRIORITY ENGINEERING, INC.

INTERSECTION TURNING MOVEMENTS REDUCTION SHEET

OCATION: Rancho Santa Fe Rd and Camino Del Arroyo Dr
Carlsbad, CA

DATE OF COUNT: Wed. 1/11/06
TIME OF COUNT: AM Peak

COUNTED BY: BW
WEATHER: Clear

TIME INTERVAL ENDING AT	FROM NORTH ON (SB) Rancho Santa Fe Rd				FROM SOUTH ON (NB) Rancho Santa Fe Rd				FROM EAST ON (WB) Camino Del Arroyo Dr				FROM WEST ON (EB) Camino Del Arroyo Dr				INTERVAL TOTALS
	Right	Thru	Left	Peds	Right	Thru	Left	Peds	Right	Thru	Left	Peds	Right	Thru	Left	Peds	
07:15 AM	3	375	18	0	7	201	0	0	5	0	25	0	15	0	6	0	655
07:30 AM	4	352	14	0	5	258	2	0	13	0	27	0	13	1	8	0	697
07:45 AM	4	372	8	0	4	371	3	0	9	2	31	0	17	1	7	0	829
08:00 AM	2	334	13	0	11	274	3	0	9	0	17	0	14	1	7	0	685
08:15 AM	5	296	13	0	8	288	10	0	8	0	23	0	12	0	8	0	671
08:30 AM	1	311	5	0	12	284	4	0	15	0	18	0	8	0	4	0	662
08:45 AM	2	291	9	0	2	242	1	0	10	1	18	0	6	0	3	0	585
09:00 AM	1	234	16	0	4	195	1	0	15	0	11	0	2	0	3	0	482
PEAK HOUR TOTALS	15	1354	48	0	28	1191	18	0	39	2	98	0	56	3	30	0	INTERSECTION
ALL MOVEMENTS	1417				1237				139				89				2882
PEAK HOUR FACTOR	0.92				0.82				0.83				0.89				0.87

:OS = Pedestrians Across Intersection Leg
IF = Peak Hour Factor

AM PEAK HOUR: 7:15 AM TO 8:15 AM

:DUCED BY: JR

DATE OF REDUCTION: 1/15/2006

PRIORITY ENGINEERING, INC.

INTERSECTION TURNING MOVEMENTS REDUCTION SHEET

TURNING MOVEMENTS DIAGRAM

AM PEAK HOUR ENDING AT 8:15 AM

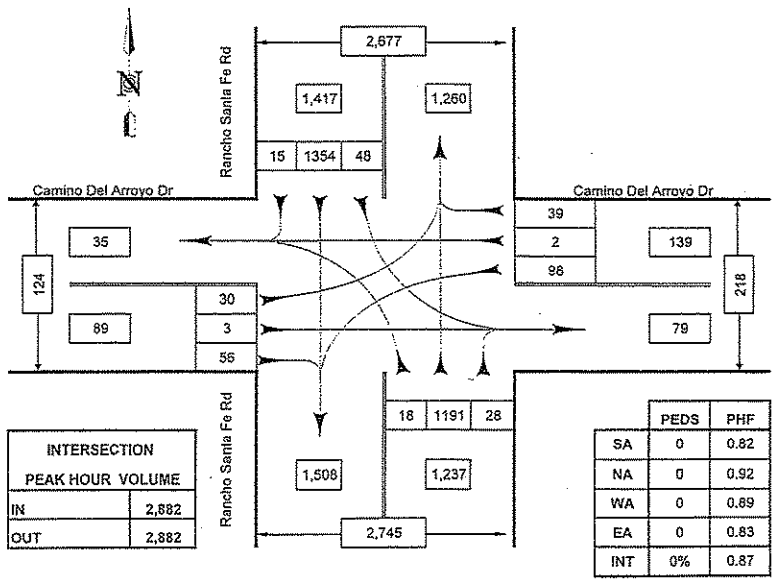

INTERSECTION PEAK HOUR VOLUME	
IN	2,882
OUT	2,882

	PEDS	PHF
SA	0	0.82
NA	0	0.92
WA	0	0.89
EA	0	0.83
INT	0%	0.87

PEDS = Pedestrians
PHF = Peak Hour Factor

Rancho Santa Fe Rd and Camino Del Arroyo Dr

Carlsbad, CA

COUNTED BY: BW
REDUCED BY: JR
DATE: 1/15/2006

DATE OF COUNT: 1/11/06
TIME OF COUNT: AM Peak
WEATHER: Clear

EX 5-A

3-P EX.

SHORT REPORT

General Information		Site Information	
Analyst	USAI	Intersection	RHO. STA. FE DR./CAM DEL ARROY
Agency or Co.	USAI	Area Type	All other areas
Date Performed	09/05/08	Jurisdiction	SAN MARCOS
Time Period	PM PEAK HOUR	Analysis Year	EXISTING

Volume and Timing Input

	EB			WB			NB			SB		
	LT	TH	RT	LT	TH	RT	LT	TH	RT	LT	TH	RT
Num. of Lanes	0	1	0	0	1	0	1	2	0	1	2	0
Lane group		LTR			LTR		L	TR		L	TR	
Volume (vph)	32	2	8	36	0	39	34	1544	49	32	1060	25
% Heavy veh	2	2	2	2	2	2	2	2	2	2	2	2
PHF	0.95	0.95	0.95	0.95	0.95	0.95	0.95	0.95	0.95	0.95	0.95	0.95
Actuated (P/A)	A	A	A	A	A	A	A	A	A	A	A	A
Startup lost time		2.0			2.0		2.0	2.0		2.0	2.0	
Ext. eff. green		2.0			2.0		2.0	2.0		2.0	2.0	
Arrival type		5			5		5	5		5	5	
Unit Extension		3.0			3.0		3.0	3.0		3.0	3.0	
Ped/Bike/RTOR Volume	0	0	0	0	0	0	0	0	0	0	0	0
Lane Width		12.0			12.0		12.0	12.0		12.0	12.0	
Parking/Grade/Parking	N	0	N	N	0	N	N	0	N	N	0	N
Parking/hr												
Bus stops/hr		0			0		0	0		0	0	
Unit Extension		3.0			3.0		3.0	3.0		3.0	3.0	

Phasing	EW Perm	02	03	04	Excl. Left	Thru & RT	07	08
Timing	G = 15.0	G =	G =	G =	G = 18.0	G = 52.0	G =	G =
	Y = 5	Y =	Y =	Y =	Y = 5	Y = 5	Y =	Y =
Duration of Analysis (hrs) = 0.25						Cycle Length C = 100.0		

Lane Group Capacity, Control Delay, and LOS Determination

	EB			WB			NB			SB		
Adj. flow rate		44			79		36	1677		34	1142	
Lane group cap.		194			206		302	1932		302	1935	
v/c ratio		0.23			0.38		0.12	0.87		0.11	0.59	
Green ratio		0.15			0.15		0.18	0.52		0.18	0.52	
Unif. delay d1		37.4			38.3		34.4	21.0		34.3	16.6	
Delay factor k		0.11			0.11		0.11	0.40		0.11	0.18	
Increm. delay d2		0.6			1.2		0.2	4.5		0.2	0.5	
PF factor		0.882			0.882		0.854	0.278		0.854	0.278	
Control delay		33.6			35.0		29.5	10.4		29.5	5.1	
Lane group LOS		C			D		C	B		C	A	
Apprch. delay	33.6			35.0			10.8			5.8		
Approach LOS	C			D			B			A		
Intersec. delay	9.8			Intersection LOS						A		

HCS2000™ Copyright © 2000 University of Florida, All Rights Reserved Version 4.1f

PRIORITY ENGINEERING, INC.

INTERSECTION TURNING MOVEMENTS REDUCTION SHEET

ATION: Rancho Santa Fe Dr and Camino Del Arroyo Dr
Carlsbad, CA

DATE OF COUNT: Wed. 1/11/06
TIME OF COUNT: PM Peak

COUNTED BY: BW
WEATHER: Clear

TIME INTERVAL ENDING AT	FROM NORTH ON (SB) Rancho Santa Fe Dr				FROM SOUTH ON (NB) Rancho Santa Fe Dr				FROM EAST ON (WB) Camino Del Arroyo Dr				FROM WEST ON (EB) Camino Del Arroyo Dr				INTERVAL TOTALS
	Right	Thru	Left	Peds	Right	Thru	Left	Peds	Right	Thru	Left	Peds	Right	Thru	Left	Peds	
04:15 PM	8	216	7	0	10	374	11	0	13	3	6	0	1	5	5	0	659
04:30 PM	6	223	11	0	17	356	10	0	9	1	11	0	5	0	4	0	653
04:45 PM	4	253	8	0	14	372	8	0	7	0	9	0	0	1	8	0	685
05:00 PM	7	276	7	0	18	379	4	0	7	0	15	0	2	0	8	0	723
05:15 PM	8	259	10	0	10	404	11	0	15	0	8	0	2	0	9	0	734
05:30 PM	6	272	7	0	7	369	11	0	10	0	6	0	4	1	6	0	719
05:45 PM	8	284	6	0	13	298	10	0	4	0	3	0	4	0	3	0	633
06:00 PM	7	270	6	0	9	321	9	0	4	3	4	0	6	0	5	0	644
PEAK HOUR TOTALS	25	1060	32	0	49	1544	34	0	39	0	36	0	8	2	32	0	INTERSECTION
ALL MOVEMENTS	1117				1627				75				42				2861
PEAK HOUR FACTOR	0.96				0.96				0.85				0.95				0.97

= Pedestrians Across Intersection Leg
= Peak Hour Factor

PM PEAK HOUR: 4:30 PM TO 5:30 PM

ICED BY: JR

DATE OF REDUCTION: 1/15/2006

PRIORITY ENGINEERING, INC.

INTERSECTION TURNING MOVEMENTS REDUCTION SHEET

TURNING MOVEMENTS DIAGRAM

PM PEAK HOUR ENDING AT 5:30 PM

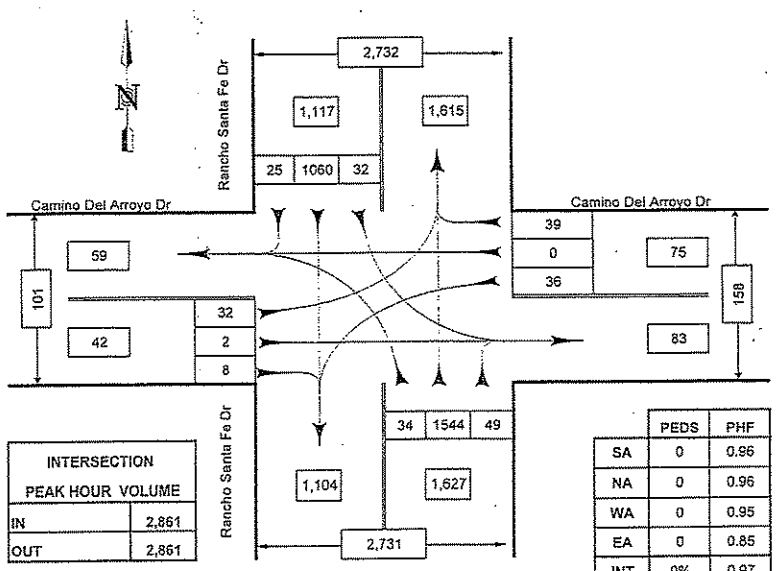

INTERSECTION PEAK HOUR VOLUME	
IN	2,861
OUT	2,861

	PEDS	PHF
SA	0	0.96
NA	0	0.96
WA	0	0.95
EA	0	0.85
INT	0%	0.97

PEDS = Pedestrians
PHF = Peak Hour Factor

Rancho Santa Fe Dr and Camino Del Arroyo Dr

Carlsbad, CA

COUNTED BY: BW
REDUCED BY: JR
DATE: 1/15/2006

DATE OF COUNT: 1/11/06
TIME OF COUNT: PM Peak
WEATHER: Clear

4-A EX.

SHORT REPORT

General Information		Site Information	
Analyst	USAI	Intersection	RHO. STA. FE DR./ISLAND DR.
Agency or Co.	USAI	Area Type	All other areas
Date Performed	09/05/08	Jurisdiction	SAN MARCOS
Time Period	AM PEAK HOUR	Analysis Year	EXISTING

Volume and Timing Input

	EB			WB			NB			SB		
	LT	TH	RT	LT	TH	RT	LT	TH	RT	LT	TH	RT
Num. of Lanes	1	0	1	0	0	0	1	2	0	0	2	0
Lane group	L		R				L	T			TR	
Volume (vph)	19		31				23	1148			1556	16
% Heavy veh	2		2				2	2			2	2
PHF	0.95		0.95				0.95	0.95			0.95	0.95
Actuated (P/A)	A	A	A				A	A	A		A	A
Startup lost time	2.0		2.0				2.0	2.0			2.0	
Ext. eff. green	2.0		2.0				2.0	2.0			2.0	
Arrival type	5		5				5	5			5	
Unit Extension	3.0		3.0				3.0	3.0			3.0	
Ped/Bike/RTOR Volume	0	0	0	0						0	0	0
Lane Width	10.0		10.0				12.0	12.0			12.0	
Parking/Grade/Parking	N	0	N	N		N	N	0	N	N	0	N
Parking/hr												
Bus stops/hr	0		0				0	0			0	
Unit Extension	3.0		3.0				3.0	3.0			3.0	

Phasing	EB Only	02	03	04	NB Only	Thru & RT	07	08
Timing	G = 8.0	G =	G =	G =	G = 19.0	G = 70.0	G =	G =
	Y = 5	Y =	Y =	Y =	Y = 5	Y = 5	Y =	Y =
Duration of Analysis (hrs) = 0.25						Cycle Length C = 112.0		

Lane Group Capacity, Control Delay, and LOS Determination

	EB			WB			NB			SB		
Adj. flow rate	20		33				24	1208			1655	
Lane group cap.	112		100				284	3133			2330	
v/c ratio	0.18		0.33				0.08	0.39			0.71	
Green ratio	0.07		0.07				0.17	0.84			0.63	
Unif. delay d1	48.9		49.5				39.2	2.1			14.2	
Delay factor k	0.11		0.11				0.11	0.11			0.27	
Increm. delay d2	0.8		1.9				0.1	0.1			1.0	
PF factor	0.949		0.949				0.864	0.311			0.133	
Control delay	47.2		48.9				34.0	0.7			2.9	
Lane group LOS	D		D				C	A			A	
Apprch. delay	48.2						1.4			2.9		
Approach LOS	D						A			A		
Intersec. delay	3.1			Intersection LOS						A		

Copyright © 2000 University of Florida, All Rights Reserved

PRIORITY ENGINEERING, INC.

INTERSECTION TURNING MOVEMENTS REDUCTION SHEET

TION: Rancho Santa Fe Rd and Island Dr
Carlsbad, CA

DATE OF COUNT: Wed. 1/11/06
TIME OF COUNT: AM Peak

COUNTED BY: RM
WEATHER: Clear

TIME INTERVAL ENDING AT	FROM NORTH ON (SB) Rancho Santa Fe Rd				FROM SOUTH ON (NB) Rancho Santa Fe Rd				FROM EAST ON (WB) N/A				FROM WEST ON (EB) Island Dr				INTERVAL TOTALS
	Right	Thru	Left	Peds	Right	Thru	Left	Peds	Right	Thru	Left	Peds	Right	Thru	Left	Peds	
07:15 AM	4	417	0	0	0	227	4	0	0	0	0	0	9	0	3	0	664
07:30 AM	3	383	0	0	0	272	7	0	0	0	0	0	12	0	6	0	683
07:45 AM	7	406	0	0	0	375	5	0	0	0	0	0	5	0	7	0	805
08:00 AM	2	350	0	0	0	274	7	0	0	0	0	0	5	0	3	0	641
08:15 AM	2	329	0	0	0	313	6	0	0	0	0	0	8	0	3	0	661
08:30 AM	7	317	0	0	0	275	3	0	0	0	0	0	14	0	3	0	619
08:45 AM	8	308	0	0	0	256	3	0	0	0	0	0	9	0	1	0	585
09:00 AM	0	254	0	0	0	211	2	0	0	0	0	0	6	0	1	0	474
PEAK HOUR TOTALS	16	1556	0	0	0	1148	23	0	0	0	0	0	31	0	19	0	INTERSECTION
ALL MOVEMENTS	1572				1171				0				50				2793
PEAK HOUR FACTOR	0.93				0.77				#DIV/0!				0.69				0.87

= Pedestrians Across Intersection Leg
= Peak Hour Factor

AM PEAK HOUR: 7:00 AM TO 8:00 AM

JCED BY: JR

DATE OF REDUCTION: 1/15/2006

PRIORITY ENGINEERING, INC.

INTERSECTION TURNING MOVEMENTS REDUCTION SHEET

TURNING MOVEMENTS DIAGRAM

AM PEAK HOUR ENDING AT 8:00 AM

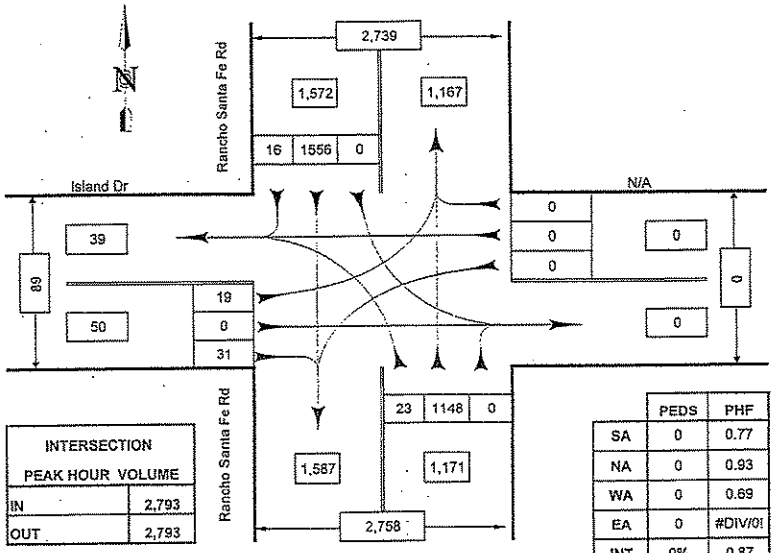

INTERSECTION PEAK HOUR VOLUME	
IN	2,793
OUT	2,793

	PEDS	PHF
SA	0	0.77
NA	0	0.93
WA	0	0.69
EA	0	#DIV/0!
INT	0%	0.87

PEDS = Pedestrians
PHF = Peak Hour Factor

Rancho Santa Fe Rd and Island Dr

Carlsbad, CA

COUNTED BY: RM
REDUCED BY: JR
DATE: 1/15/2006

DATE OF COUNT: 1/11/06
TIME OF COUNT: AM Peak
WEATHER: Clear

A-A
EX

4-P EX

SHORT REPORT

General Information		Site Information	
Analyst	USAI	Intersection	RHO. STA. FE DR./ISLAND DR.
Agency or Co.	USAI	Area Type	All other areas
Date Performed	09/05/08	Jurisdiction	SAN MARCOS
Time Period	PM PEAK HOUR	Analysis Year	EXISTING

Volume and Timing Input

	EB			WB			NB			SB		
	LT	TH	RT	LT	TH	RT	LT	TH	RT	LT	TH	RT
Num. of Lanes	1	0	1	0	0	0	1	2	0	0	2	0
Lane group	L		R				L	T			TR	
Volume (vph)	58		29				28	1566			1062	26
% Heavy veh	2		2				2	2			2	2
PHF	0.95		0.95				0.95	0.95			0.95	0.95
Actuated (P/A)	A	A	A				A	A	A		A	A
Startup lost time	2.0		2.0				2.0	2.0			2.0	
Ext. eff. green	2.0		2.0				2.0	2.0			2.0	
Arrival type	5		5				5	5			5	
Unit Extension	3.0		3.0				3.0	3.0			3.0	
Ped/Bike/RTOR Volume	0	0	0	0						0	0	0
Lane Width	10.0		10.0				12.0	12.0			12.0	
Parking/Grade/Parking	N	0	N	N		N	N	0	N	N	0	N
Parking/hr												
Bus stops/hr	0		0				0	0			0	
Unit Extension	3.0		3.0				3.0	3.0			3.0	

Phasing	EB Only	02	03	04	NB Only	Thru & RT	07	08
Timing	G = 8.0	G =	G =	G =	G = 19.0	G = 70.0	G =	G =
	Y = 5	Y =	Y =	Y =	Y = 5	Y = 5	Y =	Y =
Duration of Analysis (hrs) = 0.25						Cycle Length C = 112.0		

Lane Group Capacity, Control Delay, and LOS Determination

	EB			WB			NB			SB		
Adj. flow rate	61		31				29	1648			1145	
Lane group cap.	112		100				284	3133			2325	
v/c ratio	0.54		0.31				0.10	0.53			0.49	
Green ratio	0.07		0.07				0.17	0.84			0.63	
Unif. delay d1	50.2		49.4				39.3	2.6			11.4	
Delay factor k	0.14		0.11				0.11	0.13			0.11	
Increm. delay d2	5.4		1.8				0.2	0.2			0.2	
PF factor	0.949		0.949				0.864	0.311			0.133	
Control delay	53.1		48.6				34.1	1.0			1.7	
Lane group LOS	D		D				C	A			A	
Apprch. delay	51.6						1.5			1.7		
Approach LOS	D						A			A		
Intersec. delay	3.2			Intersection LOS						A		

HCS2000™ Copyright © 2000 University of Florida, All Rights Reserved Version 4.1f

PRIORITY ENGINEERING, INC.

INTERSECTION TURNING MOVEMENTS REDUCTION SHEET

.TION: Rancho Santa Fe Rd and Island Dr
Carlsbad, CA

DATE OF COUNT: Wed. 1/11/06
TIME OF COUNT: PM Peak

COUNTED BY: RM
WEATHER: Clear

TIME INTERVAL ENDING AT	FROM NORTH ON (SB) Rancho Santa Fe Rd				FROM SOUTH ON (NB) Rancho Santa Fe Rd				FROM EAST ON (WB) N/A				FROM WEST ON (EB) Island Dr				INTERVAL TOTALS
	Right	Thru	Left	Peds	Right	Thru	Left	Peds	Right	Thru	Left	Peds	Right	Thru	Left	Peds	
04:15 PM	3	257	0	0	0	389	5	0	0	0	0	0	4	0	11	0	669
04:30 PM	5	251	0	0	0	365	5	0	0	0	0	0	11	0	5	0	644
04:45 PM	4	236	0	0	0	393	10	0	0	0	0	0	11	0	16	0	670
05:00 PM	5	278	0	0	0	384	8	0	0	0	0	0	3	0	14	0	692
05:15 PM	10	286	0	0	0	410	7	0	0	0	0	0	12	0	12	0	737
05:30 PM	7	262	0	0	0	379	3	0	0	0	0	0	3	0	16	0	670
05:45 PM	7	261	0	0	0	329	5	0	0	0	0	0	6	0	12	0	620
06:00 PM	5	297	0	0	0	330	13	0	0	0	0	0	5	0	7	0	658
PEAK HOUR TOTALS	26	1062	0	0	0	1566	28	0	0	0	0	0	29	0	58	0	INTERSECTION
ALL MOVEMENTS	1088				1594				0				87				2769
PEAK HOUR FACTOR	0.92				0.96				#DIV/0!				0.81				0.94

: = Pedestrians Across Intersection Leg
= Peak Hour Factor

PM PEAK HOUR: 4:30 PM TO 5:30 PM

ICED BY: JR

DATE OF REDUCTION: 1/15/2006

PRIORITY ENGINEERING, INC.

INTERSECTION TURNING MOVEMENTS REDUCTION SHEET

TURNING MOVEMENTS DIAGRAM

PM PEAK HOUR ENDING AT 5:30 PM

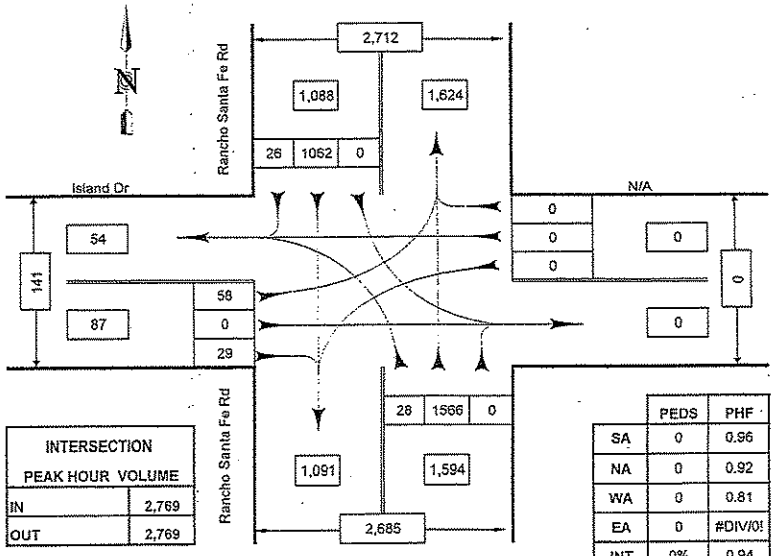

INTERSECTION PEAK HOUR VOLUME	
IN	2,769
OUT	2,769

	PEDS	PHF
SA	0	0.96
NA	0	0.92
WA	0	0.81
EA	0	#DIV/0!
INT	0%	0.94

PEDS = Pedestrians
PHF = Peak Hour Factor

Rancho Santa Fe Rd and Island Dr

Carlsbad, CA

COUNTED BY: RM
REDUCED BY: JR
DATE: 1/15/2006

DATE OF COUNT: 1/11/06
TIME OF COUNT: PM Peak
WEATHER: Clear

EX 8

10A EX

SHORT REPORT

General Information		Site Information	
Analyst	USAI	Intersection	RANCHO S. FE./MELROSE DR.
Agency or Co.	SAN DIEGO	Area Type	All other areas
Date Performed	09/05/08	Jurisdiction	SAN MARCOS
Time Period	AM PEAK HOUR	Analysis Year	EXISTING

Volume and Timing Input

	EB			WB			NB			SB		
	LT	TH	RT	LT	TH	RT	LT	TH	RT	LT	TH	RT
Num. of Lanes	2	2	2	2	2	0	2	3	0	2	3	2
Lane group	L	T	R	L	TR		L	TR		L	T	R
Volume (vph)	188	229	554	31	316	140	198	559	19	143	1390	258
% Heavy veh	2	2	2	2	2	2	2	2	2	2	2	2
PHF	0.95	0.95	0.95	0.95	0.95	0.95	0.95	0.95	0.95	0.95	0.95	0.95
Actuated (P/A)	A	A	A	A	A	A	A	A	A	A	A	A
Startup lost time	3.0	2.0	2.0	3.0	3.0		3.0	3.0		3.0	3.0	2.0
Ext. eff. green	2.0	2.0	2.0	2.0	2.0		2.0	2.0		2.0	2.0	2.0
Arrival type	5	5	5	5	5		5	5		5	5	5
Unit Extension	3.0	3.0	3.0	3.0	3.0		3.0	3.0		3.0	3.0	3.0
Ped/Bike/RTOR Volume	0	0	0	0	0	50	0	0	0	0	0	50
Lane Width	12.0	12.0	12.0	12.0	12.0		12.0	12.0		12.0	12.0	12.0
Parking/Grade/Parking	N	0	N	N	0	N	N	0	N	N	0	N
Parking/hr												
Bus stops/hr	0	0	0	0	0		0	0		0	0	0
Unit Extension	3.0	3.0	3.0	3.0	3.0		3.0	3.0		3.0	3.0	3.0

Phasing	Excl. Left	EB Only	Thru & RT	04	Excl. Left	Thru & RT	07	08
Timing	G = 15.0	G = 10.0	G = 20.0	G = 0.0	G = 13.0	G = 37.0	G = 0.0	G = 0.0
	Y = 5	Y = 5	Y = 5	Y =	Y = 5	Y = 5	Y = 0	Y =

Duration of Analysis (hrs) = 0.25 Cycle Length C = 120.0

Lane Group Capacity, Control Delay, and LOS Determination

	EB			WB			NB			SB		
Adj. flow rate	198	241	583	33	428		208	608		151	1463	219
Lane group cap.	787	1089	1173	401	571		326	1595		326	1602	1593
v/c ratio	0.25	0.22	0.50	0.08	0.75		0.64	0.38		0.46	0.91	0.14
Green ratio	0.24	0.29	0.44	0.12	0.16		0.10	0.30		0.10	0.30	0.60
Unif. delay d1	36.7	32.2	24.0	47.3	48.2		51.9	33.2		51.0	40.5	10.5
Delay factor k	0.11	0.11	0.11	0.11	0.30		0.22	0.11		0.11	0.43	0.11
Increm. delay d2	0.2	0.1	0.3	0.1	5.5		4.1	0.2		1.0	8.4	0.0
PF factor	0.788	0.725	0.473	0.912	0.875		0.926	0.714		0.926	0.714	0.125
Control delay	29.1	23.5	11.7	43.2	47.7		52.2	23.9		48.2	37.3	1.3
Lane group LOS	C	C	B	D	D		D	C		D	D	A
Apprch. delay	17.8			47.3			31.1			33.9		
Approach LOS	B			D			C			C		
Intersec. delay	30.9			Intersection LOS						C		

HCS2000™ Copyright © 2000 University of Florida, All Rights Reserved Version 4.1f

HCS2000: Signalized Intersections Release 4.1f

10-A
EX

Urban Systems Inc.
4540 Kearny Villa Rd.
San Diego Ca 92123

Phone: 858-560-4911 Fax:
E-Mail:

OPERATIONAL ANALYSIS

Analyst: USAI
Agency/Co.: SAN DIEGO
Date Performed: 09/05/08
Analysis Time Period: AM PEAK HOUR
Intersection: RANCHO S. FE./MELROSE DR.
Area Type: All other areas
Jurisdiction: SAN MARCOS
Analysis Year: EXISTING
Project ID: LA COSTA TOWN SQUARE
E/W St: MELROSE DR. N/S St: RSF

VOLUME DATA

	Eastbound			Westbound			Northbound			Southbound		
	L	T	R	L	T	R	L	T	R	L	T	R
Volume	188	229	554	31	316	140	198	559	19	143	1390	258
% Heavy Veh	2	2	2	2	2	2	2	2	2	2	2	2
PHF	0.95	0.95	0.95	0.95	0.95	0.95	0.95	0.95	0.95	0.95	0.95	0.95
PK 15 Vol	49	60	146	8	83	37	52	147	5	38	366	68
Hi Ln Vol												
% Grade		0			0			0			0	
Ideal Sat	1800	2000	1800	1900	2000		1800	2000		1800	2000	1800
ParkExist												
NumPark												
No. Lanes	2	2	2	2	2	0	2	3	0	2	3	2
LGConfig	L	T	R	L	TR		L	TR		L	T	R
Lane Width	12.0	12.0	12.0	12.0	12.0		12.0	12.0		12.0	12.0	12.0
RTOR Vol			0			50			0			50
Adj Flow	198	241	583	33	428		208	608		151	1463	219
%InSharedLn												
Prop LTs		0.000			0.000			0.000			0.000	
Prop RTs		0.000	1.000		0.222			0.033			0.000	1.000
Peds Bikes	0		0	0		0	0		0	0		0
Buses	0	0	0	0	0		0	0		0	0	0
%InProtPhase			0.0									0.0

Duration 0.25 Area Type: All other areas

OPERATING PARAMETERS

	Eastbound			Westbound			Northbound			Southbound		
	L	T	R	L	T	R	L	T	R	L	T	R
Init Unmet	0.0	0.0	0.0	0.0	0.0		0.0	0.0		0.0	0.0	0.0
Arriv. Type	5	5	5	5	5		5	5		5	5	5
Unit Ext.	3.0	3.0	3.0	3.0	3.0		3.0	3.0		3.0	3.0	3.0
I Factor		1.000			1.000			1.000			1.000	
Lost Time	3.0	2.0	2.0	3.0	3.0		3.0	3.0		3.0	3.0	2.0
Ext of g	2.0	2.0	2.0	2.0	2.0		2.0	2.0		2.0	2.0	2.0
Ped Min g		3.2			3.2			3.2			3.2	

Transportation Studies, Inc.
1350 Reynolds Avenue
Suite 115
Irvine, CA. 92614

CARLSBAD
Direction: RANCHO SANTA FE ROAD
Direction: MELROSE DRIVE

File Name : H0706088
Site Code : 00005060
Start Date : 6/26/2007
Page No : 1

Groups Printed- Vehicles

	RANCHO SANTA FE ROAD Southbound			MELROSE DRIVE Westbound			RANCHO SANTA FE ROAD Northbound			MELROSE DRIVE Eastbound			
Start Time	Right	Thru	Left	Right	Thru	Left	Right	Thru	Left	Right	Thru	Left	Int. Total
Factor	1.0	1.0	1.0	1.0	1.0	1.0	1.0	1.0	1.0	1.0	1.0	1.0	
07:00 AM	47	269	28	25	65	5	3	107	43	99	42	41	805
07:15 AM	52	305	34	28	69	9	4	117	46	109	50	46	869
07:30 AM	58	326	37	34	76	8	3	125	53	132	57	45	955
07:45 AM	65	352	39	38	79	7	5	143	46	141	55	48	1018
Total	222	1252	139	124	289	30	15	492	188	481	204	180	3647
08:00 AM	86	358	34	36	83	8	5	146	61	138	57	46	1028
08:15 AM	69	354	33	34	78	7	6	145	46	143	60	49	1024
08:30 AM	60	339	27	31	81	5	4	132	41	134	56	42	852
08:45 AM	53	334	28	31	79	4	3	130	40	127	52	38	919
Total	248	1385	122	132	321	24	18	553	178	542	225	175	3823
*** PEAK ***													
04:00 PM	34	189	32	39	49	13	10	266	87	91	57	61	928
04:15 PM	37	194	33	42	55	15	14	269	92	85	64	68	966
04:30 PM	42	181	38	43	59	16	11	262	87	89	61	70	989
04:45 PM	39	190	40	46	57	15	15	278	92	91	65	64	992
Total	162	754	143	170	220	59	50	1095	358	356	247	261	3875
05:00 PM	47	178	35	51	62	18	15	292	89	87	74	70	1028
05:15 PM	49	174	38	46	67	16	14	286	91	89	73	76	1018
05:30 PM	42	162	35	49	60	12	11	282	105	88	75	71	1012
05:45 PM	36	176	33	44	60	15	12	289	95	87	69	69	965
Total	174	710	141	190	249	61	52	1128	390	351	291	286	4023
Grand Total	786	4131	545	616	1079	174	135	3268	1125	1730	987	902	15468
Apprch %	14.5	75.5	10.0	33.0	57.7	9.3	3.0	72.2	24.8	48.1	26.9	25.1	
Total %	5.1	26.7	3.5	4.0	7.0	1.1	0.9	21.1	7.3	11.2	6.3	5.8	

Transportation Studies, Inc.
1350 Reynolds Avenue
Suite 115
Irvine, CA. 92614

City: CARLSBAD
N-S Direction: RANCHO SANTA FE ROAD
E-W Direction: MELROSE DRIVE

File Name : H0706088
Site Code : 00005060
Start Date : 6/26/2007
Page No : 2

	RANCHO SANTA FE ROAD Southbound				MELROSE DRIVE Westbound				RANCHO SANTA FE ROAD Northbound				MELROSE DRIVE Eastbound				
Start Time	Right	Thru	Left	App. Total	Right	Thru	Left	App. Total	Right	Thru	Left	App. Total	Right	Thru	Left	App. Total	Int. Total
Peak Hour From 07:00 AM to 08:45 AM - Peak 1 of 1																	
Intersection. 07:30 AM																	
Volume	258	1390	143	1791	140	316	31	487	19	559	198	776	554	229	188	971	4025
Percent	14.4	77.6	8.0		28.7	64.9	6.4		2.4	72.0	25.5		57.1	23.6	19.4		
08:00 Volume	86	358	34	458	36	83	8	127	5	146	51	202	138	57	46	241	1028
Peak Factor																	0.979
High Int.	08:00 AM				08:00 AM				08:00 AM				08:15 AM				
Volume	89	358	34	458	36	83	8	127	5	146	51	202	143	60	49	252	
Peak Factor				0.978				0.959				0.950				0.963	

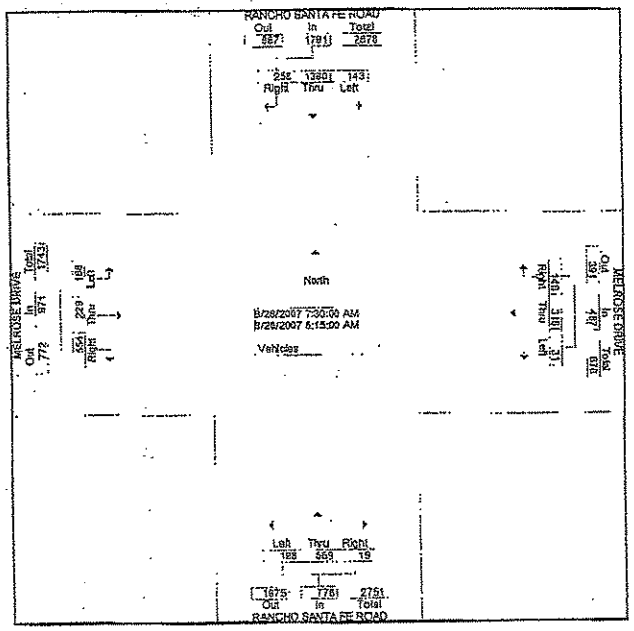

10A
EIT

10-P EX.

SHORT REPORT

General Information		Site Information	
Analyst	USAI	Intersection	RANCHO S. FE/MELROSE DR.
Agency or Co.	SAN DIEGO	Area Type	All other areas
Date Performed	09/05/08	Jurisdiction	SAN MARCOS
Time Period	PM PEAK HOUR	Analysis Year	EXISTING

Volume and Timing Input

	EB			WB			NB			SB		
	LT	TH	RT	LT	TH	RT	LT	TH	RT	LT	TH	RT
Num. of Lanes	2	2	2	2	2	0	2	3	0	2	3	2
Lane group	L	T	R	L	TR		L	TR		L	T	R
Volume (vph)	281	287	355	61	246	192	387	1137	55	148	724	177
% Heavy veh	2	2	2	2	2	2	2	2	2	2	2	2
PHF	0.95	0.95	0.95	0.95	0.95	0.95	0.95	0.95	0.95	0.95	0.95	0.95
Actuated (P/A)	A	A	A	A	A	A	A	A	A	A	A	A
Startup lost time	3.0	2.0	2.0	3.0	3.0		3.0	3.0		3.0	3.0	2.0
Ext. eff. green	2.0	2.0	2.0	2.0	2.0		2.0	2.0		2.0	2.0	2.0
Arrival type	5	5	5	5	5		5	5		5	5	5
Unit Extension	3.0	3.0	3.0	3.0	3.0		3.0	3.0		3.0	3.0	3.0
Ped/Bike/RTOR Volume	0	0	0	0	0	50	0	0	0	0	0	50
Lane Width	12.0	12.0	12.0	12.0	12.0		12.0	12.0		12.0	12.0	12.0
Parking/Grade/Parking	N	0	N	N	0	N	N	0	N	N	0	N
Parking/hr												
Bus stops/hr	0	0	0	0	0		0	0		0	0	0
Unit Extension	3.0	3.0	3.0	3.0	3.0		3.0	3.0		3.0	3.0	3.0

Phasing	Excl. Left	EB Only	Thru & RT	04	Excl. Left	NB Only	Thru & RT	08
Timing	G = 15.0	G = 14.0	G = 18.0	G = 0.0	G = 11.0	G = 9.0	G = 23.0	G = 0.0
	Y = 5	Y = 5	Y = 5	Y =	Y = 5	Y = 5	Y = 5	Y =

Duration of Analysis (hrs) = 0.25 Cycle Length C = 120.0

Lane Group Capacity, Control Delay, and LOS Determination

	EB			WB			NB			SB		
Adj. flow rate	296	302	374	64	408		407	1255		156	762	134
Lane group cap.	895	1151	1173	380	500		651	1591		271	979	951
v/c ratio	0.33	0.26	0.32	0.17	0.82		0.63	0.79		0.58	0.78	0.14
Green ratio	0.28	0.31	0.44	0.12	0.14		0.20	0.30		0.08	0.18	0.36
Unif. delay d1	34.7	31.2	21.8	47.8	50.0		43.9	38.5		53.0	46.7	26.0
Delay factor k	0.11	0.11	0.11	0.11	0.36		0.21	0.34		0.17	0.33	0.11
Increm. delay d2	0.2	0.1	0.2	0.2	10.1		1.9	2.8		3.0	4.1	0.1
PF factor	0.747	0.703	0.473	0.912	0.890		0.833	0.714		0.939	0.850	0.628
Control delay	26.1	22.1	10.4	43.8	54.6		38.5	30.3		52.7	43.8	16.4
Lane group LOS	C	C	B	D	D		D	C		D	D	B
Apprch. delay	18.8			53.2			32.3			41.6		
Approach LOS	B			D			C			D		
Intersec. delay	33.9			Intersection LOS						C		

HCS2000™ Copyright © 2000 University of Florida, All Rights Reserved Version 4.1f

HCS2000: Signalized Intersections Release 4.1f

Urban Systems Inc.
4540 Kearny Villa Rd.
San Diego Ca 92123

Phone: 858-560-4911 Fax:
E-Mail:

10-P
EX

OPERATIONAL ANALYSIS

Analyst: USAI
Agency/Co.: SAN DIEGO
Date Performed: 09/05/08
Analysis Time Period: PM PEAK HOUR
Intersection: RANCHO S. FE/MELROSE DR.
Area Type: All other areas
Jurisdiction: SAN MARCOS
Analysis Year: EXISTING
Project ID: LA COSTA TOWN SQUARE
E/W St: MELROSE DR. N/S St: RSF

VOLUME DATA

	Eastbound			Westbound			Northbound			Southbound		
	L	T	R	L	T	R	L	T	R	L	T	R
Volume	281	287	355	61	246	192	387	1137	55	148	724	177
% Heavy Veh	2	2	2	2	2	2	2	2	2	2	2	2
PHF	0.95	0.95	0.95	0.95	0.95	0.95	0.95	0.95	0.95	0.95	0.95	0.95
PK 15 Vol	74	76	93	16	65	51	102	299	14	39	191	47
Hi Ln Vol												
% Grade		0			0			0			0	
Ideal Sat	1800	2000	1800	1800	2000		1800	2000		1800	2000	1800
ParkExist												
NumPark												
No. Lanes	2	2	2	2	2	0	2	3	0	2	3	2
LGConfig	L	T	R	L	TR		L	TR		L	T	R
Lane Width	12.0	12.0	12.0	12.0	12.0		12.0	12.0		12.0	12.0	12.0
RTOR Vol			0			50			0			50
Adj Flow	296	302	374	64	408		407	1255		156	762	134
%InSharedLn												
Prop LTs		0.000			0.000			0.000			0.000	
Prop RTs		0.000	1.000		0.365			0.046			0.000	1.000
Peds Bikes	0		0	0		0	0		0	0		0
Buses	0	0	0	0	0		0	0		0	0	0
%InProtPhase			0.0									0.0

Duration 0.25 Area Type: All other areas

OPERATING PARAMETERS

	Eastbound			Westbound			Northbound			Southbound		
	L	T	R	L	T	R	L	T	R	L	T	R
Init Unmet	0.0	0.0	0.0	0.0	0.0		0.0	0.0		0.0	0.0	0.0
Arriv. Type	5	5	5	5	5		5	5		5	5	5
Unit Ext.	3.0	3.0	3.0	3.0	3.0		3.0	3.0		3.0	3.0	3.0
I Factor		1.000			1.000			1.000			1.000	
Lost Time	3.0	2.0	2.0	3.0	3.0		3.0	3.0		3.0	3.0	2.0
Ext of g	2.0	2.0	2.0	2.0	2.0		2.0	2.0		2.0	2.0	2.0
Ped Min g		33.2			33.2			22.0			33.2	

Transportation Studies, Inc.
1350 Reynolds Avenue
Suite 115
Irvine, CA. 92614

City: CARLSBAD
N-S Direction: RANCHO SANTA FE ROAD
E-W Direction: MELROSE DRIVE

10 P EX

File Name : H0706088
Site Code : 00005060
Start Date : 6/26/2007
Page No : 3

	RANCHO SANTA FE ROAD Southbound				MELROSE DRIVE Westbound				RANCHO SANTA FE ROAD Northbound				MELROSE DRIVE Eastbound				
Start Time	Right	Thru	Left	App. Total	Right	Thru	Left	App. Total	Right	Thru	Left	App. Total	Right	Thru	Left	App. Total	Int. Total
Peak Hour From 04:00 PM to 05:45 PM - Peak 1 of 1																	
Intersection 04:45 PM																	
Volume	177	724	148	1049	192	246	61	499	55	1137	387	1579	355	267	281	923	4050
Percent	16.9	69.0	14.1		38.5	49.3	12.2		3.5	72.0	24.5		38.5	31.1	30.4		
05:00 Volume	47	178	35	260	51	62	18	131	15	292	99	406	87	74	70	231	1028
Peak Factor																	0.985
High Int. 04:45 PM					05:00 PM				05:00 PM				05:15 PM				
Volume	39	190	40	269	51	62	18	131	15	292	99	406	89	73	76	238	
Peak Factor				0.975				0.952				0.972				0.970	

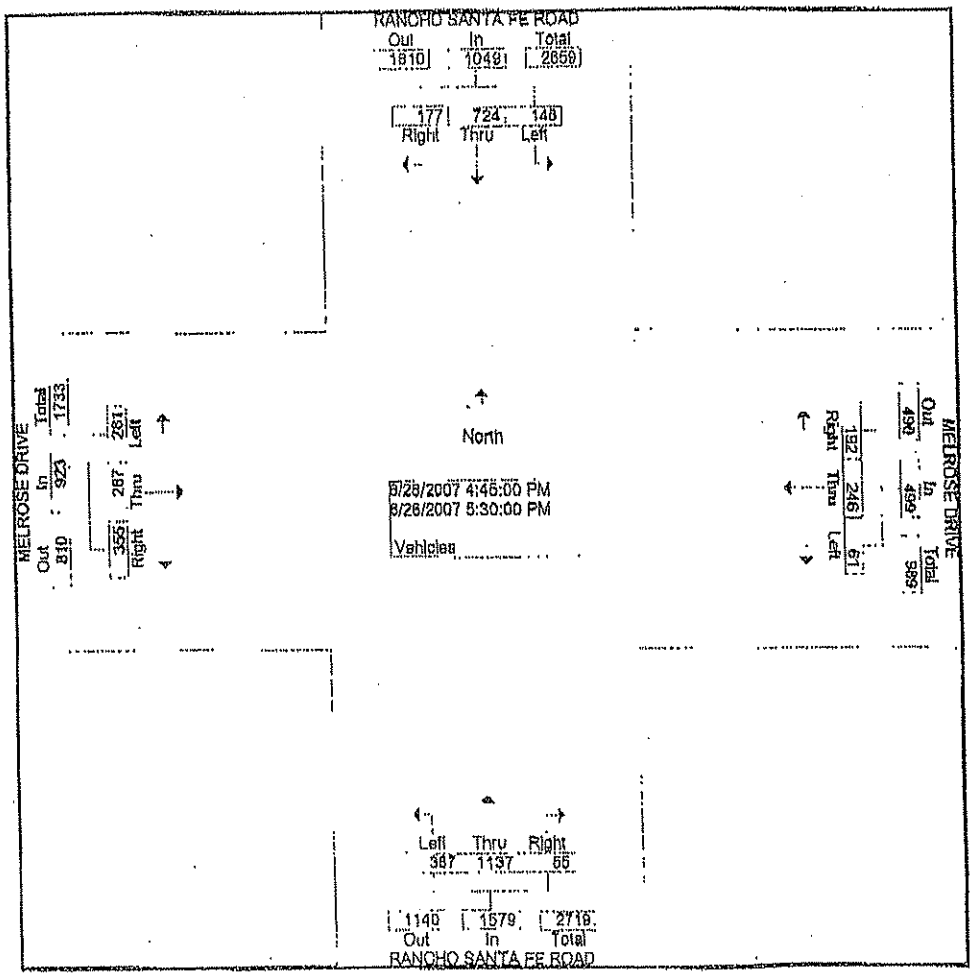

17-A-EX

ALL-WAY STOP CONTROL ANALYSIS

General Information

Analyst	USAI
Agency/Co.	USAI
Date Performed	09/08/08
Analysis Time Period	AM PEAK HOUR

Site Information

Intersection	RSF/EL CAMINO DEL NORTE
Jurisdiction	ENCINITAS
Analysis Year	EXISTING NO PROJECT

Project ID LA COSTA TOWN SQUARE

East/West Street: CAM DEL NORTE

North/South Street: RANCHO SANTA FE ROAD

Volume Adjustments and Site Characteristics

Approach	Eastbound			Westbound		
Movement	L	T	R	L	T	R
Volume	9	0	7	121	0	133
%Thrus Left Lane	50			50		

Approach	Northbound			Southbound		
Movement	L	T	R	L	T	R
Volume	2	273	81	239	590	2
%Thrus Left Lane	50			50		

	Eastbound		Westbound		Northbound		Southbound	
	L1	L2	L1	L2	L1	L2	L1	L2
Configuration	LTR		L	TR	LT	R	L	TR
PHF	0.95		0.95	0.95	0.95	0.95	0.95	0.95
Flow Rate	16		127	140	289	85	251	623
% Heavy Vehicles	0		0	2	2	2	2	2
No. Lanes	1		2		2		2	
Geometry Group	4b		5		5		5	
Duration, T	0.25							

Saturation Headway Adjustment Worksheet

Prop. Left-Turns	0.6		1.0	0.0	0.0	0.0	1.0	0.0
Prop. Right-Turns	0.4		0.0	1.0	0.0	1.0	0.0	0.0
Prop. Heavy Vehicle								
hLT-adj	0.2	0.2	0.5	0.5	0.5	0.5	0.5	0.5
hRT-adj	-0.6	-0.6	-0.7	-0.7	-0.7	-0.7	-0.7	-0.7
hHV-adj	1.7	1.7	1.7	1.7	1.7	1.7	1.7	1.7
hadj, computed	7.71		7.71	7.71	7.71	7.71	7.71	7.71

Departure Headway and Service Time

hd, initial value	3.20		3.20	3.20	3.20	3.20	3.20	3.20
x, initial	0.01		0.11	0.12	0.26	0.08	0.22	0.55
hd, final value	7.71		7.71	7.71	7.71	7.71	7.71	7.71
x, final value	0.03		0.28	0.26	0.54	0.14	0.46	1.05
Move-up time, m	2.3		2.3		2.3		2.3	
Service Time	5.4		5.4		5.4		5.4	

Capacity and Level of Service

	Eastbound		Westbound		Northbound		Southbound	
	L1	L2	L1	L2	L1	L2	L1	L2
Capacity	266		377	390	529	335	501	623
Delay	10.68		13.59	11.76	16.99	9.69	14.78	75.80
LOS	B		B	B	C	A	B	F
Approach: Delay	10.68		12.63		15.33		58.27	
LOS	B		B		C		F	
Intersection Delay	39.33							
Intersection LOS	E							

Copyright © 2003 University of Florida, All Rights Reserved

PRIORITY ENGINEERING, INC.

INTERSECTION TURNING MOVEMENTS REDUCTION SHEET

RSF

TION: El Camino Del Norte and Manchester Ave
Carlsbad, CA

DATE OF COUNT: Wed. 1/11/06
TIME OF COUNT: AM Peak

COUNTED BY: KH
WEATHER: Clear

TIME INTERVAL ENDING AT	FROM NORTH ON (SB) Manchester Ave				FROM SOUTH ON (NB) Manchester Ave				FROM EAST ON (WB) El Camino Del Norte				FROM WEST ON (EB) El Camino Del Norte				INTERVAL TOTALS
	Right	Thru	Left	Peds	Right	Thru	Left	Peds	Right	Thru	Left	Peds	Right	Thru	Left	Peds	
07:15 AM	1	0	0	0	19	0	23	0	0	163	47	0	17	87	0	0	357
07:30 AM	5	0	2	0	35	0	30	0	0	166	58	0	16	73	0	0	385
07:45 AM	1	0	5	0	39	0	24	0	0	140	65	0	20	74	1	0	369
08:00 AM	0	0	2	0	25	0	28	0	2	131	53	0	24	55	0	0	321
08:15 AM	1	0	0	0	33	0	39	0	0	153	63	0	21	71	1	0	382
08:30 AM	1	2	0	0	34	0	28	0	3	146	51	0	22	85	0	0	372
08:45 AM	0	1	1	0	37	0	37	0	0	160	51	0	27	49	1	0	364
09:00 AM	0	1	2	0	28	0	19	0	1	121	40	0	29	70	0	0	311
PEAK HOUR TOTALS	7	0	9	0	133	0	121	0	2	590	239	0	81	273	2	0	INTERSECTION
ALL MOVEMENTS	16				254				831				356				1457
PEAK HOUR FACTOR	0.57				0.88				0.93				0.94				0.95

= Pedestrians Across Intersection Leg
Peak Hour Factor

AM PEAK HOUR: 7:15 AM TO 8:15 AM

CED BY: JR

DATE OF REDUCTION: 1/6/2006

PRIORITY ENGINEERING, INC.

INTERSECTION TURNING MOVEMENTS REDUCTION SHEET

TURNING MOVEMENTS DIAGRAM

AM PEAK HOUR ENDING AT 8:15 AM

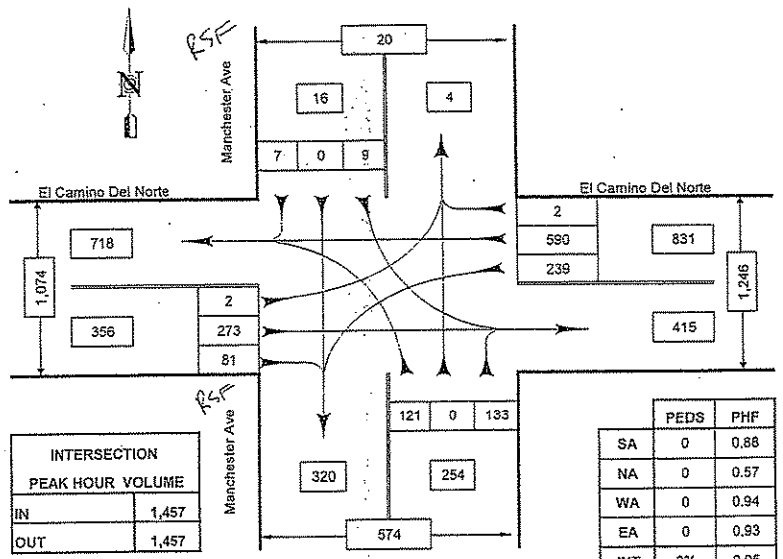

INTERSECTION PEAK HOUR VOLUME	
IN	1,457
OUT	1,457

	PEDS	PHF
SA	0	0.88
NA	0	0.57
WA	0	0.94
EA	0	0.93
INT	0%	0.95

PEDS = Pedestrians
PHF = Peak Hour Factor

El Camino Del Norte and Manchester Ave

Carlsbad, CA

COUNTED BY: KH
REDUCED BY: JR
DATE: 1/6/2006

DATE OF COUNT: 1/11/06
TIME OF COUNT: AM Peak
WEATHER: Clear

17-A
EX

17-8
EX

ALL-WAY STOP CONTROL ANALYSIS

General Information

Analyst	USAI
Agency/Co.	USAI
Date Performed	09/08/08
Analysis Time Period	PM PEAK HOUR

Site Information

Intersection	RSF/EL CAMINO DEL NORTE
Jurisdiction	ENCINITAS
Analysis Year	EXISTING NO PROJECT

Project ID LA COSTA TOWN SQUARE

East/West Street: CAM DEL NORTE

North/South Street: RANCHO SANTA FE ROAD

Volume Adjustments and Site Characteristics

Approach	Eastbound			Westbound		
Movement	L	T	R	L	T	R
Volume	5	2	4	100	0	187
%Thrus Left Lane	50			50		

Approach	Northbound			Southbound		
Movement	L	T	R	L	T	R
Volume	12	506	132	107	335	7
%Thrus Left Lane	50			50		

	Eastbound		Westbound		Northbound		Southbound	
	L1	L2	L1	L2	L1	L2	L1	L2
Configuration	LTR		L	TR	LT	R	L	TR
PHF	0.95		0.95	0.95	0.95	0.95	0.95	0.95
Flow Rate	11		105	196	544	138	112	359
% Heavy Vehicles	0		0	2	2	2	2	2
No. Lanes	1		2		2		2	
Geometry Group	4b		5		5		5	
Duration, T	0.25							

Saturation Headway Adjustment Worksheet

Prop. Left-Turns	0.5		1.0	0.0	0.0	0.0	1.0	0.0
Prop. Right-Turns	0.4		0.0	1.0	0.0	1.0	0.0	0.0
Prop. Heavy Vehicle								
hLT-adj	0.2	0.2	0.5	0.5	0.5	0.5	0.5	0.5
hRT-adj	-0.6	-0.6	-0.7	-0.7	-0.7	-0.7	-0.7	-0.7
hHV-adj	1.7	1.7	1.7	1.7	1.7	1.7	1.7	1.7
hadj, computed	7.97		7.97	7.97	7.97	7.97	7.97	7.97

Departure Headway and Service Time

hd, initial value	3.20		3.20	3.20	3.20	3.20	3.20	3.20
x, initial	0.01		0.09	0.17	0.48	0.12	0.10	0.32
hd, final value	7.97		7.97	7.97	7.97	7.97	7.97	7.97
x, final value	0.02		0.23	0.36	0.96	0.22	0.22	0.65
Move-up time, m	2.3		2.3		2.3		2.3	
Service Time	5.7		5.7		5.7		5.7	

Capacity and Level of Service

	Eastbound		Westbound		Northbound		Southbound	
	L1	L2	L1	L2	L1	L2	L1	L2
Capacity	261		355	446	567	388	362	540
Delay	10.86		12.90	13.19	52.80	9.86	11.77	20.82
LOS	B		B	B	F	A	B	C
Approach: Delay	10.86		13.09		44.11		18.67	
LOS	B		B		E		C	
Intersection Delay	29.31							
Intersection LOS	D							

HCS2000™ Copyright © 2003 University of Florida, All Rights Reserved Version 4.1f

PRIORITY ENGINEERING, INC.

INTERSECTION TURNING MOVEMENTS REDUCTION SHEET

RSF

ION: Manchester Ave and El Camino Del Norte
Carlsbad, CA

DATE OF COUNT: Wed. 1/11/06
TIME OF COUNT: PM Peak

COUNTED BY: KH
WEATHER: Clear

TIME INTERVAL ENDING AT	FROM NORTH ON (SB) Manchester Ave				FROM SOUTH ON (NB) Manchester Ave				FROM EAST ON (WB) El Camino Del Norte				FROM WEST ON (EB) El Camino Del Norte				INTERVAL TOTALS
	Right	Thru	Left	Peds	Right	Thru	Left	Peds	Right	Thru	Left	Peds	Right	Thru	Left	Peds	
04:15 PM	1	0	2	0	48	0	35	0	0	93	24	0	36	109	0	0	348
04:30 PM	0	1	0	0	58	0	22	0	0	88	29	0	24	98	0	0	320
04:45 PM	0	0	1	0	40	1	24	0	0	85	28	0	43	122	1	0	345
05:00 PM	1	1	2	0	53	0	22	0	2	100	22	0	27	118	2	0	350
05:15 PM	2	0	0	0	44	0	17	0	0	75	32	0	32	127	3	0	332
05:30 PM	0	1	1	0	50	0	26	0	4	81	35	0	35	125	2	0	360
05:45 PM	1	0	2	0	40	0	35	0	1	79	18	0	38	136	5	0	355
06:00 PM	0	0	3	0	52	0	21	0	4	91	30	0	17	128	0	0	346
PEAK HOUR TOTALS	4	2	5	0	187	0	100	0	7	335	107	0	132	506	12	0	INTERSECTION
ALL MOVEMENTS	11				287				449				650				1397
PEAK HOUR FACTOR	0.69				0.94				0.91				0.91				0.97

= Pedestrians Across Intersection Leg
Peak Hour Factor

PM PEAK HOUR: 4:45 PM TO 5:45 PM

CED BY: JR

DATE OF REDUCTION: 1/5/2006

PRIORITY ENGINEERING, INC.

INTERSECTION TURNING MOVEMENTS REDUCTION SHEET

TURNING MOVEMENTS DIAGRAM

PM PEAK HOUR ENDING AT 5:45 PM

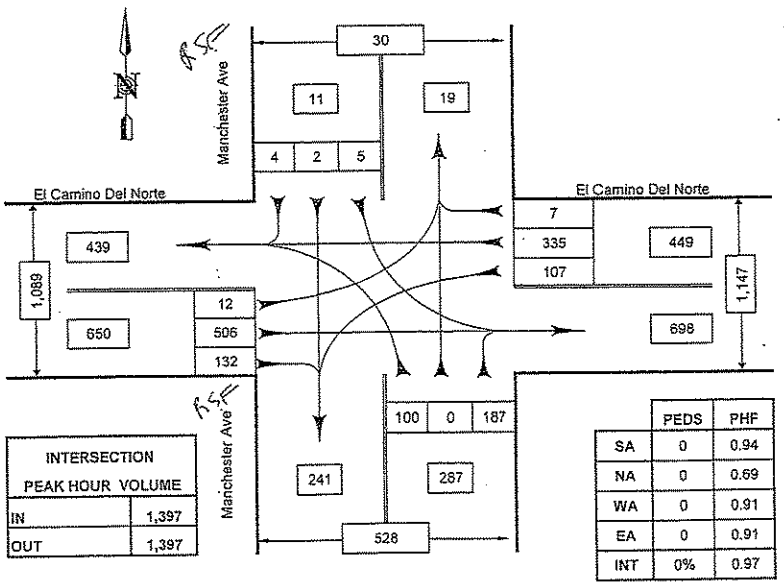

INTERSECTION PEAK HOUR VOLUME	
IN	1,397
OUT	1,397

	PEDS	PHF
SA	0	0.94
NA	0	0.69
WA	0	0.91
EA	0	0.91
INT	0%	0.97

PEDS = Pedestrians
PHF = Peak Hour Factor

Manchester Ave and El Camino Del Norte

Carlsbad, CA

COUNTED BY: KH
REDUCED BY: JR
DATE: 1/5/2006

DATE OF COUNT: 1/11/06
TIME OF COUNT: PM Peak
WEATHER: Clear

17-P
EX

28-A EX

SHORT REPORT

General Information		Site Information	
Analyst	USAI	Intersection	I-5 SB ON-OFF RAMP/LEUCADIA BL
Agency or Co.	USAI	Area Type	All other areas
Date Performed	09/08/08	Jurisdiction	ENCINITAS
Time Period	AM PEAK HOUR	Analysis Year	EXISTING

Volume and Timing Input

	EB			WB			NB			SB		
	LT	TH	RT	LT	TH	RT	LT	TH	RT	LT	TH	RT
Num. of Lanes	0	2	1	2	2	0	0	0	0	1	1	1
Lane group		T	R	L	T					L	LT	R
Volume (vph)		598	94	349	519					369	2	141
% Heavy veh		2	2	2	2					2	2	2
PHF		0.95	0.95	0.95	0.95					0.95	0.95	0.95
Actuated (P/A)		A	A	A	A					A	A	A
Startup lost time		2.0	2.0	2.0	2.0					2.0	2.0	2.0
Ext. eff. green		2.0	2.0	2.0	2.0					2.0	2.0	2.0
Arrival type		5	5	5	5					5	5	5
Unit Extension		3.0	3.0	3.0	3.0					3.0	3.0	3.0
Ped/Bike/RTOR Volume	0	0	0				0			0	0	0
Lane Width		12.0	12.0	12.0	12.0					12.0	12.0	12.0
Parking/Grade/Parking	N	0	N	N	0	N	N		N	N	0	N
Parking/hr												
Bus stops/hr		0	0	0	0					0	0	0
Unit Extension		3.0	3.0	3.0	3.0					3.0	3.0	3.0

Phasing	WB Only	Thru & RT	03	04	SB Only	06	07	08
Timing	G = 30.0	G = 30.0	G =	G =	G = 20.0	G =	G =	G =
	Y = 5	Y = 5	Y =	Y =	Y = 5	Y =	Y =	Y =
Duration of Analysis (hrs) = 0.25						Cycle Length C = 95.0		

Lane Group Capacity, Control Delay, and LOS Determination

	EB			WB			NB			SB		
Adj. flow rate		629	99	367	546					295	95	148
Lane group cap.		1179	474	1028	2554					353	354	316
v/c ratio		0.53	0.21	0.36	0.21					0.84	0.27	0.47
Green ratio		0.32	0.32	0.32	0.68					0.21	0.21	0.21
Unif. delay d1		26.7	23.8	25.1	5.5					35.9	31.4	32.8
Delay factor k		0.14	0.11	0.11	0.11					0.37	0.11	0.11
Increm. delay d2		0.5	0.2	0.2	0.0					15.9	0.4	1.1
PF factor		0.692	0.692	0.692	0.158					0.822	0.822	0.822
Control delay		19.0	16.7	17.6	0.9					45.4	26.2	28.1
Lane group LOS		B	B	B	A					D	C	C
Apprch. delay	18.7			7.6						37.3		
Approach LOS	B			A						D		
Intersec. delay	18.6			Intersection LOS						B		

HCS2000™ Copyright © 2000 University of Florida, All Rights Reserved Version 4.1f

PRIORITY ENGINEERING, INC.

INTERSECTION TURNING MOVEMENTS REDUCTION SHEET

TION: Leucadia Blvd and I-5 Southbound Ramps
Carlsbad, CA

DATE OF COUNT: Wed. 1/4/06
TIME OF COUNT: AM Peak

COUNTED BY: JR
WEATHER: Clear

TIME INTERVAL ENDING AT	FROM NORTH ON (SB) I-5 S/B Offramp				FROM SOUTH ON (NB) I-5 S/B Onramp				FROM EAST ON (WB) Leucadia Blvd				FROM WEST ON (EB) Leucadia Blvd				INTERVAL TOTALS
	Right	Thru	Left	Peds	Right	Thru	Left	Peds	Right	Thru	Left	Peds	Right	Thru	Left	Peds	
07:15 AM	32	0	59	2	0	0	0	3	0	70	75	0	27	117	0	0	380
07:30 AM	12	0	70	1	0	0	0	1	0	97	85	0	22	152	0	0	438
07:45 AM	37	0	87	0	0	0	0	1	0	120	83	0	24	135	0	0	486
08:00 AM	33	0	94	3	0	0	0	3	0	135	88	0	24	166	0	0	540
08:15 AM	46	1	90	1	0	0	0	2	0	108	95	0	21	154	0	0	515
08:30 AM	25	1	98	1	0	0	0	0	0	156	83	0	25	143	0	0	531
08:45 AM	24	0	90	0	0	0	0	0	0	85	82	0	33	105	0	0	419
09:00 AM	28	1	88	0	0	0	0	1	0	103	83	0	20	137	0	0	460
PEAK HOUR TOTALS	141	2	369	5	0	0	0	6	0	519	349	0	94	598	0	0	INTERSECTION
ALL MOVEMENTS	512				0				868				692				2072
PEAK HOUR FACTOR	0.93				#DIV/0!				0.91				0.91				0.96

= Pedestrians Across Intersection Leg
: Peak Hour Factor

AM PEAK HOUR: 7:30 AM TO 8:30 AM

ICED BY: JR

DATE OF REDUCTION: 1/5/2006

PRIORITY ENGINEERING, INC.

INTERSECTION TURNING MOVEMENTS REDUCTION SHEET

TURNING MOVEMENTS DIAGRAM
AM PEAK HOUR ENDING AT 8:30 AM

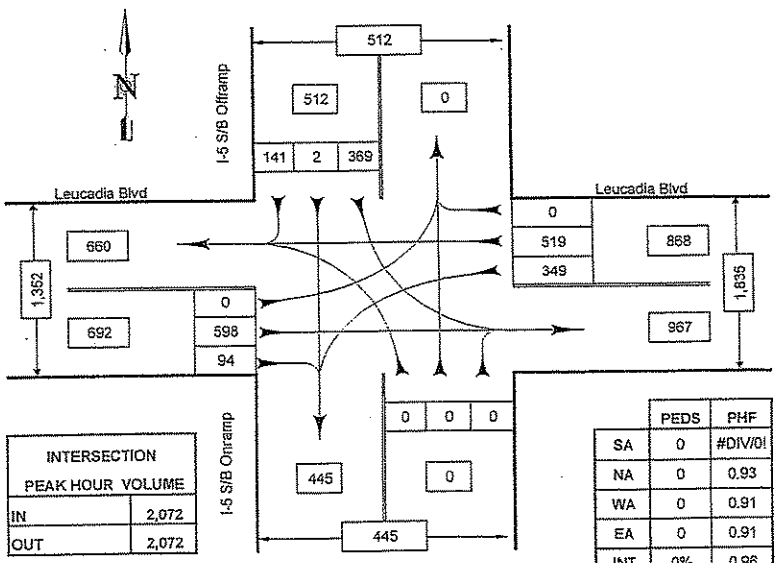

INTERSECTION PEAK HOUR VOLUME	
IN	2,072
OUT	2,072

	PEDS	PHF
SA	0	#DIV/0!
NA	0	0.93
WA	0	0.91
EA	0	0.91
INT	0%	0.96

PEDS = Pedestrians
PHF = Peak Hour Factor

Leucadia Blvd and I-5 Southbound Ramps

Carlsbad, CA

COUNTED BY: JR
REDUCED BY: JR
DATE: 1/5/2006

DATE OF COUNT: 1/4/06
TIME OF COUNT: AM Peak
WEATHER: Clear

2
8
A

28-P Ex

SHORT REPORT

General Information		Site Information	
Analyst	USAI	Intersection	I-5 SB ON-OFF RAMP/LEUCADIA BL
Agency or Co.	USAI	Area Type	All other areas
Date Performed	09/08/08	Jurisdiction	ENCINITAS
Time Period	PM PEAK HOUR	Analysis Year	EXISTING NO PROJECT

Volume and Timing Input

	EB			WB			NB			SB		
	LT	TH	RT	LT	TH	RT	LT	TH	RT	LT	TH	RT
Num. of Lanes	0	2	1	2	2	0	0	0	0	1	1	1
Lane group		T	R	L	T					L	LT	R
Volume (vph)		694	140	403	669					508	2	148
% Heavy veh		2	0	0	2					0	0	0
PHF		0.95	0.95	0.95	0.95					0.95	0.95	0.95
Actuated (P/A)		A	A	A	A					A	A	A
Startup lost time		2.0	2.0	2.0	2.0					2.0	2.0	2.0
Ext. eff. green		2.0	2.0	2.0	2.0					2.0	2.0	2.0
Arrival type		5	5	5	5					5	5	5
Unit Extension		3.0	3.0	3.0	3.0					3.0	3.0	3.0
Ped/Bike/RTOR Volume	0	0	0				0			0	0	0
Lane Width		12.0	12.0	12.0	12.0					12.0	12.0	12.0
Parking/Grade/Parking	N	0	N	N	0	N	N		N	N	0	N
Parking/hr												
Bus stops/hr		0	0	0	0					0	0	0
Unit Extension		3.0	3.0	3.0	3.0					3.0	3.0	3.0

Phasing	WB Only	Thru & RT	03	04	SB Only	06	07	08
Timing	G = 30.0	G = 30.0	G =	G =	G = 20.0	G =	G =	G =
	Y = 5	Y = 5	Y =	Y =	Y = 5	Y =	Y =	Y =
Duration of Analysis (hrs) = 0.25						Cycle Length C = 95.0		

Lane Group Capacity, Control Delay, and LOS Determination

	EB			WB			NB			SB		
Adj. flow rate		731	147	424	704					246	291	156
Lane group cap.		1179	483	1049	2554					360	361	322
v/c ratio		0.62	0.30	0.40	0.28					0.68	0.81	0.48
Green ratio		0.32	0.32	0.32	0.68					0.21	0.21	0.21
Unif. delay d1		27.7	24.6	25.5	5.8					34.6	35.7	33.0
Delay factor k		0.20	0.11	0.11	0.11					0.25	0.35	0.11
Increm. delay d2		1.0	0.4	0.3	0.1					5.3	12.6	1.2
PF factor		0.692	0.692	0.692	0.158					0.822	0.822	0.822
Control delay		20.2	17.4	17.9	1.0					33.7	41.9	28.3
Lane group LOS		C	B	B	A					C	D	C
Apprch. delay	19.7			7.3						35.9		
Approach LOS	B			A						D		
Intersec. delay	18.7			Intersection LOS						B		

HCS2000™ Copyright © 2000 University of Florida, All Rights Reserved Version 4.1f

PRIORITY ENGINEERING, INC.

INTERSECTION TURNING MOVEMENTS REDUCTION SHEET

ATION: Leucadia Blvd and I-5 Southbound Ramps
Carlsbad, CA

DATE OF COUNT: Wed. 1/4/06
TIME OF COUNT: PM Peak

COUNTED BY: JR
WEATHER: Clear

TIME INTERVAL ENDING AT	FROM NORTH ON (SB) I-5 S/B Offramp				FROM SOUTH ON (NB) I-5 S/B Onramp				FROM EAST ON (WB) Leucadia Blvd				FROM WEST ON (EB) Leucadia Blvd				INTERVAL TOTALS
	Right	Thru	Left	Peds	Right	Thru	Left	Peds	Right	Thru	Left	Peds	Right	Thru	Left	Peds	
04:15 PM	35	0	141	0	0	0	0	2	0	187	102	0	32	185	0	0	683
04:30 PM	34	1	110	1	0	0	0	2	0	182	85	0	36	184	0	0	632
04:45 PM	40	1	116	0	0	0	0	0	0	148	109	0	44	169	0	0	627
05:00 PM	35	0	141	0	0	0	0	5	0	152	107	0	28	159	0	0	622
05:15 PM	43	0	101	0	0	0	0	2	0	165	86	0	34	175	0	2	604
05:30 PM	44	1	120	0	0	0	0	0	0	145	87	0	32	177	0	0	606
05:45 PM	28	0	101	0	0	0	0	0	0	172	99	0	29	139	0	0	568
06:00 PM	38	0	107	0	0	0	0	2	0	139	87	0	49	94	0	1	514
PEAK HOUR TOTALS	148	2	508	1	0	0	0	9	0	669	403	0	140	694	0	0	INTERSECTION
ALL MOVEMENTS	658				0				1072				834				2564
PEAK HOUR FACTOR	0.92				#DIV/0!				0.93				0.95				0.94

'S = Pedestrians Across Intersection Leg
' = Peak Hour Factor

PM PEAK HOUR: 4:00 PM TO 5:00 PM

UCED BY: JR

DATE OF REDUCTION: 1/5/2006

PRIORITY ENGINEERING, INC.

INTERSECTION TURNING MOVEMENTS REDUCTION SHEET

TURNING MOVEMENTS DIAGRAM

PM PEAK HOUR ENDING AT 5:00 PM

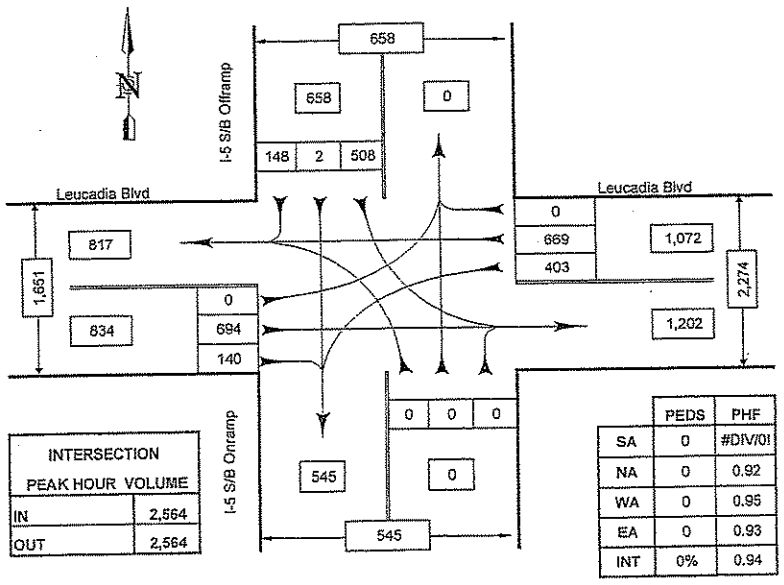

INTERSECTION PEAK HOUR VOLUME	
IN	2,564
OUT	2,564

	PEDS	PHF
SA	0	#DIV/0!
NA	0	0.92
WA	0	0.95
EA	0	0.93
INT	0%	0.94

PEDS = Pedestrians
PHF = Peak Hour Factor

Leucadia Blvd and I-5 Southbound Ramps

Carlsbad, CA

COUNTED BY: JR

REDUCED BY: JR

DATE: 1/5/2006

DATE OF COUNT: 1/4/06

TIME OF COUNT: PM Peak

WEATHER: Clear

29-A EX

SHORT REPORT

General Information		Site Information	
Analyst	USAI	Intersection	I-5 NB OFF RAMP/LEUCADIA BLVD.
Agency or Co.	USAI	Area Type	All other areas
Date Performed	09/08/08	Jurisdiction	ENCINITAS
Time Period	AM PEAK HOUR	Analysis Year	EXISTING

Volume and Timing Input

	EB			WB			NB			SB		
	LT	TH	RT	LT	TH	RT	LT	TH	RT	LT	TH	RT
Num. of Lanes	1	2	0	0	3	0	1	1	2	0	0	0
Lane group	L	T			TR		L	LT	R			
Volume (vph)	207	731			650	396	90	37	283			
% Heavy veh	2	2			2	2	2	2	2			
PHF	0.95	0.95			0.95	0.95	0.95	0.95	0.95			
Actuated (P/A)	A	A			A	A	A	A	A			
Startup lost time	2.0	2.0			2.0		2.0	2.0	2.0			
Ext. eff. green	2.0	2.0			2.0		2.0	2.0	2.0			
Arrival type	5	5			5		5	5	5			
Unit Extension	3.0	3.0			3.0		3.0	3.0	3.0			
Ped/Bike/RTOR Volume				0		200	0		0	0		
Lane Width	12.0	12.0			12.0		12.0	12.0	12.0			
Parking/Grade/Parking	N	0	N	N	0	N	N	0	N	N		N
Parking/hr												
Bus stops/hr	0	0			0		0	0	0			
Unit Extension	3.0	3.0			3.0		3.0	3.0	3.0			

Phasing	EB Only	Thru & RT	03	04	NB Only	06	07	08
Timing	G = 30.0	G = 30.0	G =	G =	G = 15.0	G =	G =	G =
	Y = 5	Y = 5	Y =	Y =	Y = 5	Y =	Y =	Y =
Duration of Analysis (hrs) = 0.25						Cycle Length C = 90.0		

Lane Group Capacity, Control Delay, and LOS Determination

	EB			WB			NB			SB		
Adj. flow rate	218	769			890		95	39	298			
Lane group cap.	559	2696			1719		279	294	443			
v/c ratio	0.39	0.29			0.52		0.34	0.13	0.67			
Green ratio	0.33	0.72			0.33		0.17	0.17	0.17			
Unif. delay d1	23.0	4.4			24.2		33.1	32.0	35.2			
Delay factor k	0.11	0.11			0.12		0.11	0.11	0.24			
Increm. delay d2	0.5	0.1			0.3		0.7	0.2	4.0			
PF factor	0.667	0.180			0.667		0.867	0.867	0.867			
Control delay	15.8	0.8			16.4		29.4	27.9	34.5			
Lane group LOS	B	A			B		C	C	C			
Apprch. delay	4.1			16.4			32.8					
Approach LOS	A			B			C					
Intersec. delay	14.2			Intersection LOS						B		

HCS2000™ Copyright © 2000 University of Florida, All Rights Reserved Version 4.1f

PRIORITY ENGINEERING, INC.

INTERSECTION TURNING MOVEMENTS REDUCTION SHEET

:ATION: Leucadia Blvd and NB I-5 Ramps
Carlsbad, CA

DATE OF COUNT: Wed. 1/4/06
TIME OF COUNT: AM Peak

COUNTED BY: TB
WEATHER: Clear

TIME INTERVAL ENDING AT	FROM NORTH ON (SB) NB I-5 Offramp				FROM SOUTH ON (NB) NB I-5 Onramp				FROM EAST ON (WB) Leucadia Blvd				FROM WEST ON (EB) Leucadia Blvd				INTERVAL TOTALS
	Right	Thru	Left	Peds	Right	Thru	Left	Peds	Right	Thru	Left	Peds	Right	Thru	Left	Peds	
07:15 AM	0	0	0	0	58	5	11	0	74	119	0	0	0	141	39	0	447
07:30 AM	0	0	0	0	71	9	15	0	62	138	0	0	0	179	38	0	512
07:45 AM	0	0	0	0	65	12	23	0	96	167	0	0	0	171	48	0	582
08:00 AM	0	0	0	0	66	14	20	0	119	156	0	0	0	202	52	0	629
08:15 AM	0	0	0	0	80	7	18	0	90	139	0	0	0	189	52	0	575
08:30 AM	0	0	0	0	72	4	29	0	91	188	0	0	0	169	55	0	608
08:45 AM	0	0	0	0	74	7	24	0	103	130	0	0	0	150	32	0	520
09:00 AM	0	0	0	0	85	5	19	0	93	144	0	0	0	187	37	0	570
PEAK HOUR TOTALS	0	0	0	0	283	37	90	0	396	650	0	0	0	731	207	0	INTERSECTION
ALL MOVEMENTS	0				410				1046				938				2394
PEAK HOUR FACTOR	#DIV/0!				0.98				0.94				0.92				0.95

DS = Pedestrians Across Intersection Leg
F = Peak Hour Factor

AM PEAK HOUR: 7:30 AM TO 8:30 AM

DUCED BY: JR

DATE OF REDUCTION: 1/15/2006

PRIORITY ENGINEERING, INC.

INTERSECTION TURNING MOVEMENTS REDUCTION SHEET

TURNING MOVEMENTS DIAGRAM

AM PEAK HOUR ENDING AT 8:30 AM

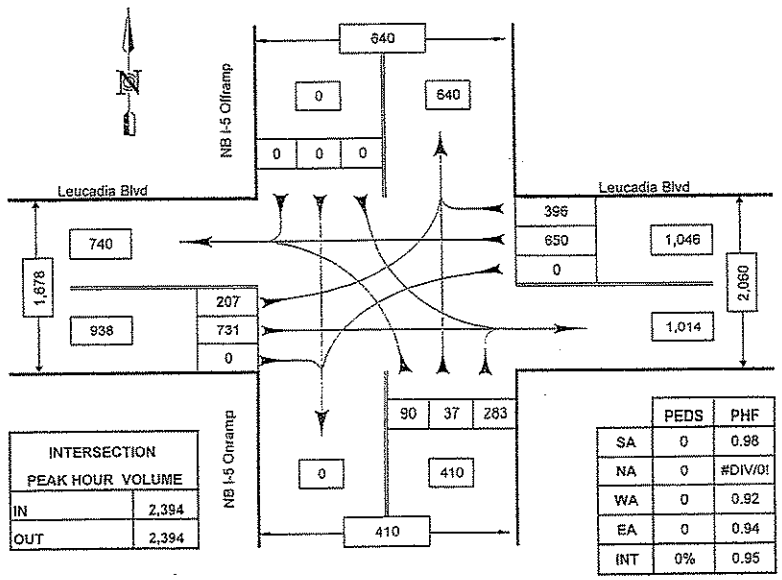

INTERSECTION PEAK HOUR VOLUME	
IN	2,394
OUT	2,394

	PEDS	PHF
SA	0	0.98
NA	0	#DIV/0!
WA	0	0.92
EA	0	0.94
INT	0%	0.95

PEDS = Pedestrians
PHF = Peak Hour Factor

Leucadia Blvd and NB I-5 Ramps

Carlsbad, CA

COUNTED BY: TB
REDUCED BY: JR
DATE: 1/15/2006

DATE OF COUNT: 1/4/06
TIME OF COUNT: AM Peak
WEATHER: Clear

2-4
EX

29-P
EX

SHORT REPORT

General Information		Site Information	
Analyst	USAI	Intersection	I-5 NB OFF RAMP/LEUCADIA BLVD.
Agency or Co.	USAI	Area Type	All other areas
Date Performed	09/08/08	Jurisdiction	ENCINITAS
Time Period	PM PEAK HOUR	Analysis Year	EXISTING

Volume and Timing Input

	EB			WB			NB			SB		
	LT	TH	RT	LT	TH	RT	LT	TH	RT	LT	TH	RT
Num. of Lanes	1	2	0	0	3	0	1	1	2	0	0	0
Lane group	L	T			TR		L	LT	R			
Volume (vph)	199	968			675	407	147	46	585			
% Heavy veh	2	2			2	2	2	2	2			
PHF	0.95	0.95			0.95	0.95	0.95	0.95	0.95			
Actuated (P/A)	A	A			A	A	A	A	A			
Startup lost time	2.0	2.0			2.0		2.0	2.0	2.0			
Ext. eff. green	2.0	2.0			2.0		2.0	2.0	2.0			
Arrival type	5	5			5		5	5	5			
Unit Extension	3.0	3.0			3.0		3.0	3.0	3.0			
Ped/Bike/RTOR Volume				0		200	0		0	0		
Lane Width	12.0	12.0			12.0		12.0	12.0	12.0			
Parking/Grade/Parking	N	0	N	N	0	N	N	0	N	N		N
Parking/hr												
Bus stops/hr	0	0			0		0	0	0			
Unit Extension	3.0	3.0			3.0		3.0	3.0	3.0			

Phasing	EB Only	Thru & RT	03	04	NB Only	06	07	08
Timing	G = 30.0	G = 30.0	G =	G =	G = 30.0	G =	G =	G =
	Y = 5	Y = 5	Y =	Y =	Y = 5	Y =	Y =	Y =
Duration of Analysis (hrs) = 0.25						Cycle Length C = 105.0		

Lane Group Capacity, Control Delay, and LOS Determination

	EB			WB			NB			SB		
Adj. flow rate	209	1019			929		155	48	616			
Lane group cap.	479	2311			1472		479	504	759			
v/c ratio	0.44	0.44			0.63		0.32	0.10	0.81			
Green ratio	0.29	0.62			0.29		0.29	0.29	0.29			
Unif. delay d1	30.6	10.5			32.7		29.5	27.5	34.9			
Delay factor k	0.11	0.11			0.21		0.11	0.11	0.35			
Increm. delay d2	0.6	0.1			0.9		0.4	0.1	6.7			
PF factor	0.733	0.131			0.733		0.733	0.733	0.733			
Control delay	23.1	1.5			24.8		22.0	20.3	32.3			
Lane group LOS	C	A			C		C	C	C			
Apprch. delay	5.2			24.8			29.6					
Approach LOS	A			C			C					
Intersec. delay	18.0			Intersection LOS						B		

HCS2000™ Copyright © 2000 University of Florida, All Rights Reserved Version 4.1f

PRIORITY ENGINEERING, INC.

INTERSECTION TURNING MOVEMENTS REDUCTION SHEET

TION: Leucadia Blvd and NB I-5 Ramps
Carlsbad, CA

DATE OF COUNT: Wed. 1/4/06
TIME OF COUNT: PM Peak

COUNTED BY: TB
WEATHER: Clear

TIME INTERVAL ENDING AT	FROM NORTH ON (SB) NB I-5 Onramp				FROM SOUTH ON (NB) NB I-5 Offramp				FROM EAST ON (WB) Leucadia Blvd				FROM WEST ON (EB) Leucadia Blvd				INTERVAL TOTALS
	Right	Thru	Left	Peds	Right	Thru	Left	Peds	Right	Thru	Left	Peds	Right	Thru	Left	Peds	
04:15 PM	0	0	0	0	129	16	44	0	101	173	0	0	0	240	61	0	764
04:30 PM	0	0	0	0	132	10	29	0	105	171	0	0	0	237	51	0	735
04:45 PM	0	0	0	0	164	10	39	0	116	154	0	0	0	238	50	0	771
05:00 PM	0	0	0	0	160	10	35	0	85	177	0	0	0	253	37	0	757
05:15 PM	0	0	0	0	140	16	42	0	111	165	0	0	0	214	35	0	723
05:30 PM	0	0	0	0	162	16	40	0	99	163	0	0	0	223	44	0	747
05:45 PM	0	0	0	0	134	14	54	0	92	181	0	0	0	185	39	0	700
06:00 PM	0	0	0	0	163	18	39	0	84	175	0	0	0	186	36	0	701
PEAK HOUR TOTALS	0	0	0	0	585	46	147	0	407	675	0	0	0	968	199	0	INTERSECTION
ALL MOVEMENTS	0				778				1082				1167				3027
PEAK HOUR FACTOR	#DIV/0!				0.91				0.98				0.97				0.98

= Pedestrians Across Intersection Leg
: Peak Hour Factor

PM PEAK HOUR: 4:00 PM TO 5:00 PM

ICED BY: JR

DATE OF REDUCTION: 1/15/2006

PRIORITY ENGINEERING, INC.

INTERSECTION TURNING MOVEMENTS REDUCTION SHEET

TURNING MOVEMENTS DIAGRAM

PM PEAK HOUR ENDING AT 5:00 PM

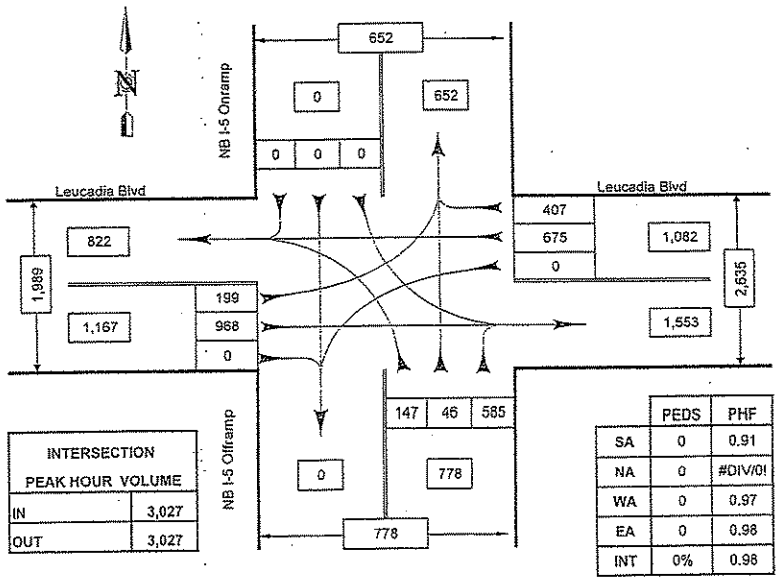

INTERSECTION PEAK HOUR VOLUME	
IN	3,027
OUT	3,027

	PEDS	PHF
SA	0	0.91
NA	0	#DIV/0!
WA	0	0.97
EA	0	0.98
INT	0%	0.98

PEDS = Pedestrians
PHF = Peak Hour Factor

Leucadia Blvd and NB I-5 Ramps

Carlsbad, CA

COUNTED BY: TB
REDUCED BY: JR
DATE: 1/15/2006

DATE OF COUNT: 1/4/06
TIME OF COUNT: PM Peak
WEATHER: Clear

29-P
Ex

30-A EX

SHORT REPORT

General Information		Site Information	
Analyst	USAI	Intersection	LEUCADIA BLVD/URANIA AVE. / CLARK AVE.
Agency or Co.	USAI	Area Type	All other areas
Date Performed	09/08/08	Jurisdiction	ENCINITAS
Time Period	AM PEAK HOUR	Analysis Year	EXISTING

Volume and Timing Input

	EB			WB			NB			SB		
	LT	TH	RT	LT	TH	RT	LT	TH	RT	LT	TH	RT
Num. of Lanes	1	2	0	1	3	0	1	1	0	1	1	0
Lane group	L	TR		L	TR		L	TR		L	TR	
Volume (vph)	30	951	9	16	665	12	25	3	16	223	1	66
% Heavy veh	2	2	2	2	2	2	2	2	2	2	2	2
PHF	0.95	0.95	0.95	0.95	0.95	0.95	0.95	0.95	0.95	0.95	0.95	0.95
Actuated (P/A)	A	A	A	A	A	A	A	A	A	A	A	A
Startup lost time	2.0	2.0		2.0	2.0		2.0	2.0		2.0	2.0	
Ext. eff. green	2.0	2.0		2.0	2.0		2.0	2.0		2.0	2.0	
Arrival type	5	5		5	5		5	5		5	5	
Unit Extension	3.0	3.0		3.0	3.0		3.0	3.0		3.0	3.0	
Ped/Bike/RTOR Volume	0	0	0	0	0	0	0	0	0	0		0
Lane Width	12.0	12.0		12.0	12.0		12.0	12.0		12.0	12.0	
Parking/Grade/Parking	N	0	N	N	0	N	N	0	N	N	0	N
Parking/hr												
Bus stops/hr	0	0		0	0		0	0		0	0	
Unit Extension	3.0	3.0		3.0	3.0		3.0	3.0		3.0	3.0	

Phasing	Excl. Left	Thru & RT	03	04	Excl. Left	Thru & RT	07	08
Timing	G = 10.0	G = 30.0	G = 0.0	G =	G = 20.0	G = 20.0	G = 0.0	G = 0.0
	Y = 5	Y = 5	Y =	Y =	Y = 5	Y = 5	Y = 0	Y =

Duration of Analysis (hrs) = 0.25 Cycle Length C = 100.0

Lane Group Capacity, Control Delay, and LOS Determination

	EB			WB			NB			SB		
Adj. flow rate	32	1010		17	713		26	20		235	70	
Lane group cap.	168	1118		168	1598		335	342		335	334	
v/c ratio	0.19	0.90		0.10	0.45		0.08	0.06		0.70	0.21	
Green ratio	0.10	0.30		0.10	0.30		0.20	0.20		0.20	0.20	
Unif. delay d1	41.3	33.6		40.9	28.3		32.5	32.4		37.2	33.4	
Delay factor k	0.11	0.42		0.11	0.11		0.11	0.11		0.27	0.11	
Increm. delay d2	0.6	10.3		0.3	0.2		0.1	0.1		6.4	0.3	
PF factor	0.926	0.714		0.926	0.714		0.833	0.833		0.833	0.833	
Control delay	38.8	34.3		38.1	20.4		27.2	27.1		37.5	28.1	
Lane group LOS	D	C		D	C		C	C		D	C	
Apprch. delay	34.5			20.8			27.1			35.3		
Approach LOS	C			C			C			D		
Intersec. delay	29.7			Intersection LOS						C		

HCS2000™

Copyright © 2000 University of Florida, All Rights Reserved

Version 4.1f

PRIORITY ENGINEERING, INC.

INTERSECTION TURNING MOVEMENTS REDUCTION SHEET

CATION: Leucadia Blvd and Clark Ave URBANIA
Carlsbad, CA

DATE OF COUNT: Tue. 1/3/06
TIME OF COUNT: AM Peak

COUNTED BY: MM
WEATHER: Clear

TIME INTERVAL ENDING AT	FROM NORTH ON (SB) Clark Ave				FROM SOUTH ON (NB) Clark Ave				FROM EAST ON (WB) Leucadia Blvd				FROM WEST ON (EB) Leucadia Blvd				INTERVAL TOTALS
	Right	Thru	Left	Peds	Right	Thru	Left	Peds	Right	Thru	Left	Peds	Right	Thru	Left	Peds	
07:15 AM	13	0	38	0	3	12	2	0	6	119	8	0	2	179	17	0	399
07:30 AM	12	0	61	0	11	8	6	0	17	145	8	0	0	110	12	0	390
07:45 AM	16	4	65	0	15	8	17	0	15	148	11	0	1	135	3	0	438
08:00 AM	22	1	95	0	5	2	4	0	4	179	3	0	7	262	7	0	591
08:15 AM	24	0	74	0	4	1	9	0	3	142	9	0	1	208	12	0	487
08:30 AM	12	0	31	0	7	0	8	0	3	183	2	0	1	209	7	0	463
08:45 AM	8	0	23	0	0	0	4	0	2	161	2	0	0	272	4	0	476
09:00 AM	8	0	15	0	0	0	4	0	2	94	2	0	0	101	3	0	229
PEAK HOUR TOTALS	66	1	223	0	16	3	25	0	12	665	16	0	9	951	30	0	INTERSECTION
ALL MOVEMENTS	290				44				693				990				2017
PEAK HOUR FACTOR	0.61				0.73				0.92				0.90				0.85

DS = Pedestrians Across Intersection Leg
F = Peak Hour Factor

AM PEAK HOUR: 7:45 AM TO 8:45 AM

DUCED BY: JR

DATE OF REDUCTION: 1/15/2006

PRIORITY ENGINEERING, INC.

INTERSECTION TURNING MOVEMENTS REDUCTION SHEET

TURNING MOVEMENTS DIAGRAM

AM PEAK HOUR ENDING AT 8:45 AM

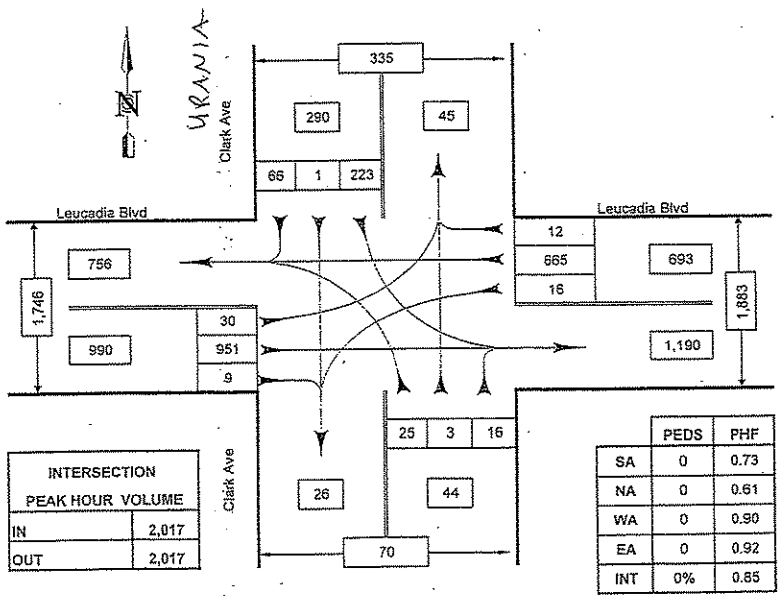

INTERSECTION PEAK HOUR VOLUME	
IN	2,017
OUT	2,017

	PEDS	PHF
SA	0	0.73
NA	0	0.61
WA	0	0.90
EA	0	0.92
INT	0%	0.85

PEDS = Pedestrians
PHF = Peak Hour Factor

Leucadia Blvd and Clark Ave

Carlsbad, CA

COUNTED BY: MM
REDUCED BY: JR
DATE: 1/15/2006

DATE OF COUNT: 1/3/06
TIME OF COUNT: AM Peak
WEATHER: Clear

EXH 20-A

30-P EX

SHORT REPORT

General Information		Site Information	
Analyst	USAI	Intersection	LEUCADIA BLVD/URANIA AVE. / CLARK AVE.
Agency or Co.	USAI	Area Type	All other areas
Date Performed	09/08/08	Jurisdiction	ENCINITAS
Time Period	PM PEAK HOUR	Analysis Year	EXISTING

Volume and Timing Input

	EB			WB			NB			SB		
	LT	TH	RT	LT	TH	RT	LT	TH	RT	LT	TH	RT
Num. of Lanes	1	2	0	1	3	0	1	1	0	1	1	0
Lane group	L	TR		L	TR		L	TR		L	TR	
Volume (vph)	48	1625	19	78	1502	34	37	3	9	109	3	40
% Heavy veh	2	2	2	2	2	2	2	2	2	2	2	2
PHF	0.95	0.95	0.95	0.95	0.95	0.95	0.95	0.95	0.95	0.95	0.95	0.95
Actuated (P/A)	A	A	A	A	A	A	A	A	A	A	A	A
Startup lost time	2.0	2.0		2.0	2.0		2.0	2.0		2.0	2.0	
Ext. eff. green	2.0	2.0		2.0	2.0		2.0	2.0		2.0	2.0	
Arrival type	5	5		5	5		5	5		5	5	
Unit Extension	3.0	3.0		3.0	3.0		3.0	3.0		3.0	3.0	
Ped/Bike/RTOR Volume	0	0	0	0	0	0	0	0	0	0		0
Lane Width	12.0	12.0		12.0	12.0		12.0	12.0		12.0	12.0	
Parking/Grade/Parking	N	0	N	N	0	N	N	0	N	N	0	N
Parking/hr												
Bus stops/hr	0	0		0	0		0	0		0	0	
Unit Extension	3.0	3.0		3.0	3.0		3.0	3.0		3.0	3.0	

Phasing	Excl. Left	Thru & RT	03	04	Excl. Left	Thru & RT	07	08
Timing	G = 10.0	G = 55.0	G = 0.0	G =	G = 10.0	G = 10.0	G = 0.0	G = 0.0
	Y = 5	Y = 5	Y =	Y =	Y = 5	Y = 5	Y = 0	Y =

Duration of Analysis (hrs) = 0.25 | Cycle Length C = 105.0

Lane Group Capacity, Control Delay, and LOS Determination

	EB			WB			NB			SB		
Adj. flow rate	51	1731		82	1617		39	12		115	45	
Lane group cap.	160	1952		160	2788		160	166		160	161	
v/c ratio	0.32	0.89		0.51	0.58		0.24	0.07		0.72	0.28	
Green ratio	0.10	0.52		0.10	0.52		0.10	0.10		0.10	0.10	
Unif. delay d1	44.3	22.2		45.2	17.1		44.0	43.3		46.1	44.2	
Delay factor k	0.11	0.41		0.12	0.17		0.11	0.11		0.28	0.11	
Increm. delay d2	1.2	5.4		2.8	0.3		0.8	0.2		14.5	1.0	
PF factor	0.930	0.267		0.930	0.267		0.930	0.930		0.930	0.930	
Control delay	42.4	11.3		44.8	4.9		41.7	40.4		57.4	42.0	
Lane group LOS	D	B		D	A		D	D		E	D	
Apprch. delay	12.2			6.8			41.4			53.1		
Approach LOS	B			A			D			D		
Intersec. delay	11.9			Intersection LOS						B		

HCS2000™ Copyright © 2000 University of Florida, All Rights Reserved Version 4.1f

PRIORITY ENGINEERING, INC.

INTERSECTION TURNING MOVEMENTS REDUCTION SHEET

ON: Leucadia Blvd and Clark Ave / URBANIA
Carlsbad, CA

DATE OF COUNT: Tue. 1/3/06
TIME OF COUNT: PM Peak

COUNTED BY: MM
WEATHER: Clear

TIME INTERVAL ENDING AT	FROM NORTH ON (SB) Clark Ave				FROM SOUTH ON (NB) Clark Ave				FROM EAST ON (WB) Leucadia Blvd				FROM WEST ON (EB) Leucadia Blvd				INTERVAL TOTALS
	Right	Thru	Left	Peds	Right	Thru	Left	Peds	Right	Thru	Left	Peds	Right	Thru	Left	Peds	
04:15 PM	9	1	23	0	2	1	13	0	16	275	12	0	4	289	12	0	657
04:30 PM	13	2	34	0	2	0	10	0	9	205	16	0	1	274	7	0	573
04:45 PM	5	0	23	0	9	1	11	0	13	306	13	0	1	284	18	0	684
05:00 PM	10	2	26	0	4	0	6	0	9	300	19	0	7	313	13	0	709
05:15 PM	18	0	24	0	3	1	9	0	9	333	24	0	3	354	14	0	802
05:30 PM	6	1	38	0	2	0	14	0	10	464	24	0	3	478	12	0	1052
05:45 PM	6	0	21	0	0	2	8	0	6	405	11	0	6	470	9	0	944
06:00 PM	20	0	31	0	0	0	11	0	14	269	11	0	2	129	17	0	504
PEAK HOUR TOTALS	40	3	109	0	9	3	37	0	34	1502	78	0	19	1625	48	0	INTERSECTION
ALL MOVEMENTS	152				49				1614				1692				3507
PEAK HOUR FACTOR	0.84				0.77				0.81				0.86				0.83

Pedestrians Across Intersection Leg
Peak Hour Factor

PM PEAK HOUR: 4:45 PM TO 5:45 PM

ED BY: JR

DATE OF REDUCTION: 1/15/2006

PRIORITY ENGINEERING, INC.

INTERSECTION TURNING MOVEMENTS REDUCTION SHEET

TURNING MOVEMENTS DIAGRAM

PM PEAK HOUR ENDING AT 5:45 PM

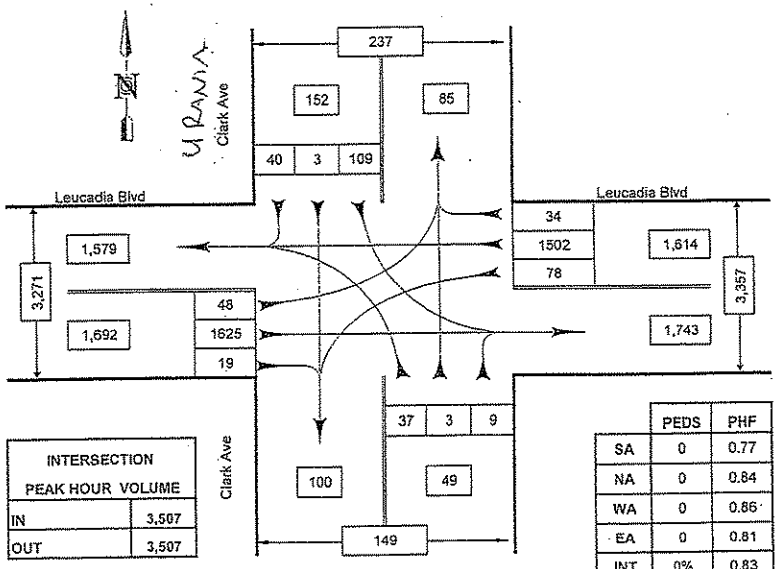

INTERSECTION PEAK HOUR VOLUME	
IN	3,507
OUT	3,507

	PEDS	PHF
SA	0	0.77
NA	0	0.84
WA	0	0.86
EA	0	0.81
INT	0%	0.83

PEDS = Pedestrians
PHF = Peak Hour Factor

Leucadia Blvd and Clark Ave

Carlsbad, CA

COUNTED BY: MM

REDUCED BY: JR

DATE: 1/15/2006

DATE OF COUNT: 1/3/06

TIME OF COUNT: PM Peak

WEATHER: Clear

X 2004

31-A EX

SHORT REPORT

General Information		Site Information	
Analyst	USAI	Intersection	LEUCADIA BLVD/SAXONY RD.
Agency or Co.	USAI	Area Type	All other areas
Date Performed	09/08/08	Jurisdiction	ENCINITAS
Time Period	AM PEAK HOUR	Analysis Year	EXISTING

Volume and Timing Input

	EB			WB			NB			SB		
	LT	TH	RT	LT	TH	RT	LT	TH	RT	LT	TH	RT
Num. of Lanes	1	2	0	1	2	0	1	1	0	1	1	0
Lane group	L	TR		L	TR		L	TR		L	TR	
Volume (vph)	21	898	284	230	963	18	95	44	75	43	173	18
% Heavy veh	2	2	2	2	2	2	2	2	2	2	2	2
PHF	0.95	0.95	0.95	0.95	0.95	0.95	0.95	0.95	0.95	0.95	0.95	0.95
Actuated (P/A)	A	A	A	A	A	A	A	A	A	A	A	A
Startup lost time	2.0	2.0		2.0	2.0		2.0	2.0		2.0	2.0	
Ext. eff. green	2.0	2.0		2.0	2.0		2.0	2.0		2.0	2.0	
Arrival type	5	5		5	5		5	5		5	5	
Unit Extension	3.0	3.0		3.0	3.0		3.0	3.0		3.0	3.0	
Ped/Bike/RTOR Volume	0	0	100	0	0	0	0	0	75	0		0
Lane Width	12.0	12.0		12.0	12.0		12.0	12.0		12.0	12.0	
Parking/Grade/Parking	N	0	N	N	0	N	N	0	N	N	0	N
Parking/hr												
Bus stops/hr	0	0		0	0		0	0		0	0	
Unit Extension	3.0	3.0		3.0	3.0		3.0	3.0		3.0	3.0	

Phasing	Excl. Left	Thru & RT	03	04	Excl. Left	Thru & RT	07	08
Timing	G = 16.0	G = 35.0	G = 0.0	G =	G = 9.0	G = 20.0	G = 0.0	G = 0.0
	Y = 5	Y = 5	Y =	Y =	Y = 5	Y = 5	Y = 0	Y =

Duration of Analysis (hrs) = 0.25 Cycle Length C = 100.0

Lane Group Capacity, Control Delay, and LOS Determination

	EB			WB			NB			SB		
Adj. flow rate	22	1139		242	1033		100	46		45	201	
Lane group cap.	268	1273		268	1303		151	392		151	387	
v/c ratio	0.08	0.89		0.90	0.79		0.66	0.12		0.30	0.52	
Green ratio	0.16	0.35		0.16	0.35		0.09	0.20		0.09	0.20	
Unif. delay d1	35.7	30.8		41.2	29.2		44.0	32.8		42.5	35.7	
Delay factor k	0.11	0.42		0.42	0.34		0.24	0.11		0.11	0.13	
Increm. delay d2	0.1	8.5		31.0	3.4		10.4	0.1		1.1	1.3	
PF factor	0.873	0.641		0.873	0.641		0.934	0.833		0.934	0.833	
Control delay	31.3	28.2		67.0	22.2		51.5	27.4		40.9	31.0	
Lane group LOS	C	C		E	C		D	C		D	C	
Apprch. delay	28.3			30.7			43.9			32.8		
Approach LOS	C			C			D			C		
Intersec. delay	30.6			Intersection LOS						C		

HCS2000™ Copyright © 2000 University of Florida, All Rights Reserved Version 4.1f

PRIORITY ENGINEERING, INC.

INTERSECTION TURNING MOVEMENTS REDUCTION SHEET

)CATION: Leucadia Blvd and Saxony Rd, Carlsbad, CA

DATE OF COUNT: Tue. 1/3/06 | TIME OF COUNT: AM Peak

COUNTED BY: BW | WEATHER: Clear

TIME INTERVAL ENDING AT	FROM NORTH ON (SB) Saxony Rd				FROM SOUTH ON (NB) Saxony Rd				FROM EAST ON (WB) Leucadia Blvd				FROM WEST ON (EB) Leucadia Blvd				INTERVAL TOTALS
	Right	Thru	Left	Peds	Right	Thru	Left	Peds	Right	Thru	Left	Peds	Right	Thru	Left	Peds	
07:15 AM	6	30	10	0	19	8	15	0	1	161	29	0	33	165	8	0	485
07:30 AM	6	30	15	0	11	8	25	0	2	197	42	0	49	234	5	0	624
07:45 AM	5	35	11	0	16	14	32	0	3	261	43	0	74	201	2	0	697
08:00 AM	6	48	13	0	13	13	19	0	12	245	69	0	64	242	4	0	752
08:15 AM	5	62	13	0	17	6	20	0	2	187	47	0	89	249	9	0	706
08:30 AM	3	28	6	0	29	11	24	0	1	268	71	0	57	206	6	0	707
08:45 AM	6	33	11	0	17	3	10	0	4	239	45	0	49	237	1	0	655
09:00 AM	0	4	33	0	22	9	16	0	8	201	56	0	48	264	11	0	672
PEAK HOUR TOTALS	18	173	43	0	75	44	95	0	18	963	230	0	284	898	21	0	INTERSECTION
ALL MOVEMENTS	234				214				1211				1203				2862
PEAK HOUR FACTOR	0.73				0.84				0.90				0.87				0.95

EDS = Pedestrians Across Intersection Leg
HF = Peak Hour Factor

AM PEAK HOUR: 7:30 AM TO 8:30 AM

EDUCED BY: JR

DATE OF REDUCTION: 1/15/2006

PRIORITY ENGINEERING, INC.

INTERSECTION TURNING MOVEMENTS REDUCTION SHEET

TURNING MOVEMENTS DIAGRAM

AM PEAK HOUR ENDING AT 8:30 AM

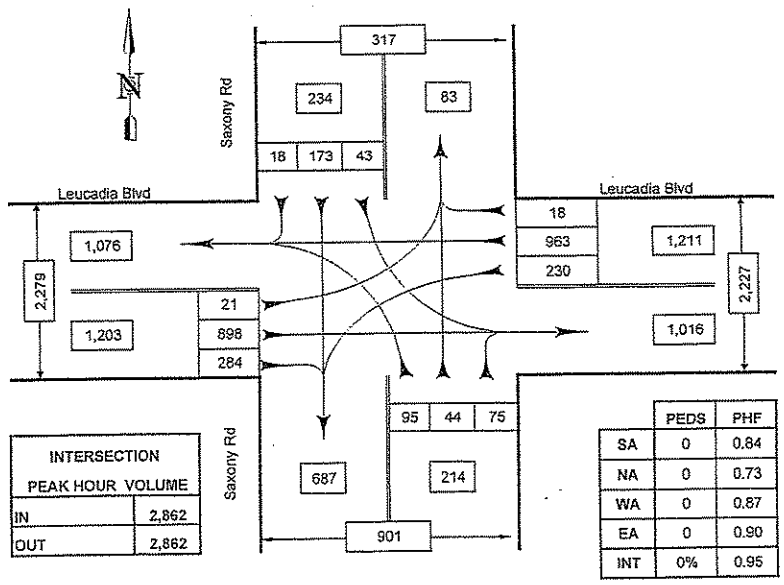

INTERSECTION PEAK HOUR VOLUME	
IN	2,862
OUT	2,862

	PEDS	PHF
SA	0	0.84
NA	0	0.73
WA	0	0.87
EA	0	0.90
INT	0%	0.95

PEDS = Pedestrians
PHF = Peak Hour Factor

Leucadia Blvd and Saxony Rd

Carlsbad, CA

COUNTED BY: BW

REDUCED BY: JR

DATE: 1/15/2006

DATE OF COUNT: 1/3/06

TIME OF COUNT: AM Peak

WEATHER: Clear

EXHIBIT A

31 - P EX.

SHORT REPORT

General Information		Site Information	
Analyst	USAI	Intersection	LEUCADIA BLVD/SAXONY RD.
Agency or Co.	USAI	Area Type	All other areas
Date Performed	09/08/08	Jurisdiction	ENCINITAS
Time Period	PM PEAK HOUR	Analysis Year	EXISTING

Volume and Timing Input

	EB			WB			NB			SB		
	LT	TH	RT	LT	TH	RT	LT	TH	RT	LT	TH	RT
Num. of Lanes	1	2	0	1	2	0	1	1	0	1	1	0
Lane group	L	TR		L	TR		L	TR		L	TR	
Volume (vph)	34	1441	163	151	1171	24	166	93	201	25	64	23
% Heavy veh	2	2	2	2	2	2	2	2	2	2	2	2
PHF	0.95	0.95	0.95	0.95	0.95	0.95	0.95	0.95	0.95	0.95	0.95	0.95
Actuated (P/A)	A	A	A	A	A	A	A	A	A	A	A	A
Startup lost time	2.0	2.0		2.0	2.0		2.0	2.0		2.0	2.0	
Ext. eff. green	2.0	2.0		2.0	2.0		2.0	2.0		2.0	2.0	
Arrival type	5	5		5	5		4	4		4	4	
Unit Extension	3.0	3.0		3.0	3.0		3.0	3.0		3.0	3.0	
Ped/Bike/RTOR Volume	0	0	100	0	0	0	0	0	75	0		0
Lane Width	12.0	12.0		12.0	12.0		12.0	12.0		12.0	12.0	
Parking/Grade/Parking	N	0	N	N	0	N	N	0	N	N	0	N
Parking/hr												
Bus stops/hr	0	0		0	0		0	0		0	0	
Unit Extension	3.0	3.0		3.0	3.0		3.0	3.0		3.0	3.0	

Phasing	Excl. Left	Thru & RT	03	04	Excl. Left	Thru & RT	07	08
Timing	G = 14.0	G = 51.0	G = 0.0	G =	G = 15.0	G = 20.0	G = 0.0	G = 0.0
	Y = 5	Y = 5	Y =	Y =	Y = 4	Y = 4	Y = 0	Y =

Duration of Analysis (hrs) = 0.25 | Cycle Length C = 118.0

Lane Group Capacity, Control Delay, and LOS Determination

	EB			WB			NB			SB		
Adj. flow rate	36	1583		159	1258		175	231		26	91	
Lane group cap.	199	1603		199	1609		213	304		213	319	
v/c ratio	0.18	0.99		0.80	0.78		0.82	0.76		0.12	0.29	
Green ratio	0.12	0.43		0.12	0.43		0.13	0.17		0.13	0.17	
Unif. delay d1	46.8	33.2		50.6	28.7		50.2	46.7		45.7	42.8	
Delay factor k	0.11	0.49		0.34	0.33		0.36	0.31		0.11	0.11	
Increm. delay d2	0.4	19.5		20.2	2.6		22.0	10.7		0.3	0.5	
PF factor	0.910	0.493		0.910	0.493		1.000	1.000		1.000	1.000	
Control delay	43.1	35.8		66.3	16.7		72.2	57.4		45.9	43.3	
Lane group LOS	D	D		E	B		E	E		D	D	
Apprch. delay	36.0			22.3			63.8			43.8		
Approach LOS	D			C			E			D		
Intersec. delay	34.0			Intersection LOS						C		

HCS2000™ Copyright © 2000 University of Florida, All Rights Reserved Version 4.1f

PRIORITY ENGINEERING, INC.

INTERSECTION TURNING MOVEMENTS REDUCTION SHEET

OCATION: Leucadia Blvd and Saxony St, Carlsbad, CA

DATE OF COUNT: Wed. 1/18/06 TIME OF COUNT: PM Peak

COUNTED BY: JP WEATHER: Clear

TIME INTERVAL ENDING AT	FROM NORTH ON (SB) Saxony St				FROM SOUTH ON (NB) Saxony St				FROM EAST ON (WB) Leaucadia Blvd				FROM WEST ON (EB) Leucadia Blvd				INTERVAL TOTALS
	Right	Thru	Left	Peds	Right	Thru	Left	Peds	Right	Thru	Left	Peds	Right	Thru	Left	Peds	
04:15 PM	9	15	4	0	29	7	35	0	8	358	34	0	42	322	2	0	865
04:30 PM	7	18	5	0	31	19	34	0	5	281	33	0	31	354	18	0	837
04:45 PM	4	11	11	0	27	16	40	0	12	286	35	0	37	291	12	0	782
05:00 PM	7	21	9	0	40	29	44	0	6	247	34	0	36	335	12	0	820
05:15 PM	3	16	10	0	58	24	53	0	5	298	38	0	43	338	7	0	903
05:30 PM	10	19	7	0	54	29	52	0	6	277	31	0	31	328	7	0	851
05:45 PM	5	14	3	0	46	21	25	0	10	305	45	0	46	401	9	0	930
06:00 PM	5	15	5	0	43	19	26	0	3	291	37	0	43	374	11	0	872
PEAK HOUR TOTALS	23	64	25	0	201	93	166	0	24	1171	151	0	163	1441	34	0	INTERSECTION
ALL MOVEMENTS	112				460				1346				1638				3556
PEAK HOUR FACTOR	0.78				0.75				0.93				0.90				0.96

PEDS = Pedestrians Across Intersection Leg
PHF = Peak Hour Factor

PM PEAK HOUR: 5:00 PM TO 6:00 PM

REDUCED BY: JR

DATE OF REDUCTION: 1/19/2006

PRIORITY ENGINEERING, INC.

INTERSECTION TURNING MOVEMENTS REDUCTION SHEET

TURNING MOVEMENTS DIAGRAM

PM PEAK HOUR ENDING AT 6:00 PM

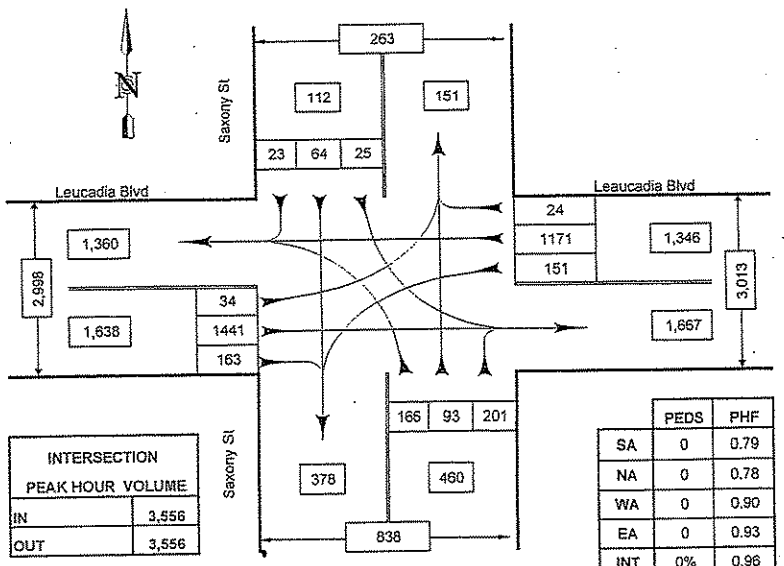

INTERSECTION PEAK HOUR VOLUME	
IN	3,556
OUT	3,556

	PEDS	PHF
SA	0	0.79
NA	0	0.78
WA	0	0.90
EA	0	0.93
INT	0%	0.96

PEDS = Pedestrians
PHF = Peak Hour Factor

Leucadia Blvd and Saxony St

Carlsbad, CA

COUNTED BY: JP

REDUCED BY: JR

DATE: 1/19/2006

DATE OF COUNT: 1/18/06

TIME OF COUNT: PM Peak

WEATHER: Clear

32-A EX

SHORT REPORT

General Information		Site Information	
Analyst	USAI	Intersection	LEUCADIA BLVD/SIDONIA ST.
Agency or Co.	USAI	Area Type	All other areas
Date Performed	09/08/08	Jurisdiction	ENCINITAS
Time Period	AM PEAK HOUR	Analysis Year	EXISTING

Volume and Timing Input

	EB			WB			NB			SB		
	LT	TH	RT	LT	TH	RT	LT	TH	RT	LT	TH	RT
Num. of Lanes	1	2	0	0	2	0	0	0	0	1	0	1
Lane group	L	T			TR					L		R
Volume (vph)	28	1048			1284	7				35		13
% Heavy veh	2	2			2	2				2		2
PHF	0.95	0.95			0.95	0.95				0.95		0.95
Actuated (P/A)	A	A			A	A				A		A
Startup lost time	2.0	2.0			2.0					2.0		2.0
Ext. eff. green	2.0	2.0			2.0					2.0		2.0
Arrival type	5	5			5					5		5
Unit Extension	3.0	3.0			3.0					3.0		3.0
Ped/Bike/RTOR Volume				0	0	0	0			0	0	0
Lane Width	12.0	12.0			12.0					12.0		12.0
Parking/Grade/Parking	N	0	N	N	0	N	N		N	N	0	N
Parking/hr												
Bus stops/hr	0	0			0					0		0
Unit Extension	3.0	3.0			3.0					3.0		3.0

Phasing	EB Only	Thru & RT	03	04	SB Only	06	07	08
Timing	G = 25.0	G = 35.0	G = 0.0	G =	G = 10.0	G = 0.0	G = 0.0	G =
	Y = 5	Y = 5	Y =	Y =	Y = 5	Y =	Y =	Y =

Duration of Analysis (hrs) = 0.25 Cycle Length C = 85.0

Lane Group Capacity, Control Delay, and LOS Determination

	EB			WB			NB			SB		
Adj. flow rate	29	1103			1359					37		14
Lane group cap.	493	2855			1536					197		176
v/c ratio	0.06	0.39			0.88					0.19		0.08
Green ratio	0.29	0.76			0.41					0.12		0.12
Unif. delay d1	21.5	3.3			23.1					33.8		33.4
Delay factor k	0.11	0.11			0.41					0.11		0.11
Increm. delay d2	0.1	0.1			6.6					0.5		0.2
PF factor	0.722	0.213			0.533					0.911		0.911
Control delay	15.6	0.8			18.9					31.3		30.6
Lane group LOS	B	A			B					C		C
Apprch. delay	1.2			18.9						31.1		
Approach LOS	A			B						C		
Intersec. delay	11.2			Intersection LOS						B		

HCS2000™ Copyright © 2000 University of Florida, All Rights Reserved Version 4.1f

PRIORITY ENGINEERING, INC.

INTERSECTION TURNING MOVEMENTS REDUCTION SHEET

:ATION: Leucadia Blvd and Sidonia St
Carlsbad, CA

DATE OF COUNT: Tue. 1/3/06
TIME OF COUNT: AM Peak

COUNTED BY: JG
WEATHER: Clear

TIME INTERVAL ENDING AT	FROM NORTH ON (SB) Sidonia St				FROM SOUTH ON (NB) N/A				FROM EAST ON (WB) Leucadia Blvd				FROM WEST ON (EB) Leucadia Blvd				INTERVAL TOTALS
	Right	Thru	Left	Peds	Right	Thru	Left	Peds	Right	Thru	Left	Peds	Right	Thru	Left	Peds	
07:15 AM	0	0	1	0	0	0	0	0	0	221	0	0	0	187	3	0	412
07:30 AM	1	0	17	0	0	0	0	0	3	231	0	0	0	261	1	0	514
07:45 AM	3	0	10	0	0	0	0	0	2	337	0	0	0	250	5	0	607
08:00 AM	7	0	10	0	0	0	0	0	2	333	0	0	0	269	11	0	632
08:15 AM	2	0	5	0	0	0	0	0	2	298	0	0	0	289	5	0	601
08:30 AM	1	0	10	0	0	0	0	0	1	316	0	0	0	240	7	0	575
08:45 AM	0	0	3	0	0	0	0	0	4	280	0	0	0	257	3	0	547
09:00 AM	2	0	6	0	0	0	0	0	1	280	0	0	0	285	10	0	564
PEAK HOUR TOTALS	13	0	35	0	0	0	0	0	7	1284	0	0	0	1046	28	0	INTERSECTION
ALL MOVEMENTS	48				0				1291				1076				2415
PEAK HOUR FACTOR	0.71				#DIV/0!				0.95				0.91				0.96

DS = Pedestrians Across Intersection Leg
F = Peak Hour Factor

AM PEAK HOUR: 7:30 AM TO 8:30 AM

DUCED BY: JR

DATE OF REDUCTION: 1/15/2006

PRIORITY ENGINEERING, INC.

INTERSECTION TURNING MOVEMENTS REDUCTION SHEET

TURNING MOVEMENTS DIAGRAM

AM PEAK HOUR ENDING AT 8:30 AM

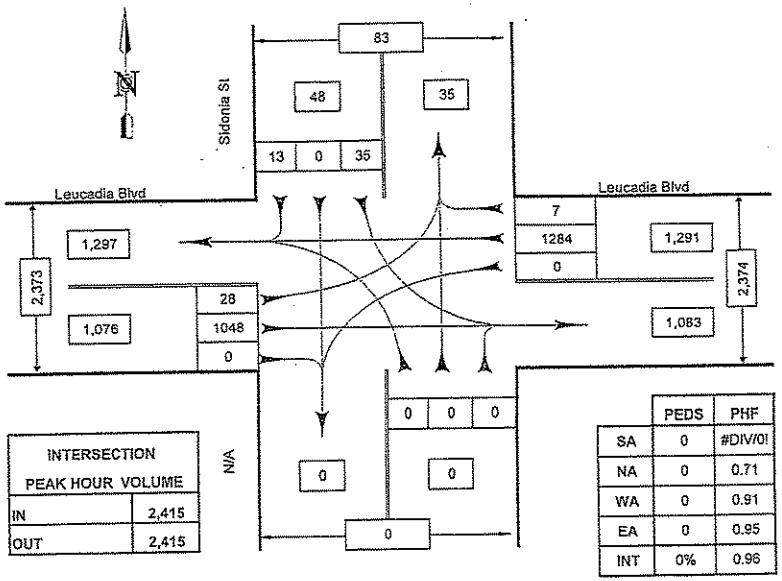

INTERSECTION PEAK HOUR VOLUME	
IN	2,415
OUT	2,415

	PEDS	PHF
SA	0	#DIV/0!
NA	0	0.71
WA	0	0.91
EA	0	0.95
INT	0%	0.96

PEDS = Pedestrians
PHF = Peak Hour Factor

Leucadia Blvd and Sidonia St

Carlsbad, CA

COUNTED BY: JG

REDUCED BY: JR

DATE: 1/15/2006

DATE OF COUNT: 1/3/06

TIME OF COUNT: AM Peak

WEATHER: Clear

32-A
Ex

32-P EX

SHORT REPORT

General Information		Site Information	
Analyst	USAI	Intersection	LEUCADIA BLVD/SIDONIA ST.
Agency or Co.	USAI	Area Type	All other areas
Date Performed	09/08/08	Jurisdiction	ENCINITAS
Time Period	PM PEAK HOUR	Analysis Year	EXISTING

Volume and Timing Input

	EB			WB			NB			SB		
	LT	TH	RT	LT	TH	RT	LT	TH	RT	LT	TH	RT
Num. of Lanes	1	2	0	0	2	0	0	0	0	1	0	1
Lane group	L	T			TR					L		R
Volume (vph)	35	1699			1328	25				16		8
% Heavy veh	2	2			2	2				2		2
PHF	0.95	0.95			0.95	0.95				0.95		0.95
Actuated (P/A)	A	A			A	A				A		A
Startup lost time	2.0	2.0			2.0					2.0		2.0
Ext. eff. green	2.0	2.0			2.0					2.0		2.0
Arrival type	5	5			5					5		5
Unit Extension	3.0	3.0			3.0					3.0		3.0
Ped/Bike/RTOR Volume				0	0	0	0			0	0	0
Lane Width	12.0	12.0			12.0					12.0		12.0
Parking/Grade/Parking	N	0	N	N	0	N	N		N	N	0	N
Parking/hr												
Bus stops/hr	0	0			0					0		0
Unit Extension	3.0	3.0			3.0					3.0		3.0

Phasing	EB Only	Thru & RT	03	04	SB Only	06	07	08
Timing	G = 25.0	G = 35.0	G = 0.0	G =	G = 10.0	G = 0.0	G = 0.0	G =
	Y = 5	Y = 5	Y =	Y =	Y = 5	Y =	Y =	Y =

Duration of Analysis (hrs) = 0.25 | Cycle Length C = 85.0

Lane Group Capacity, Control Delay, and LOS Determination

	EB			WB			NB			SB		
Adj. flow rate	37	1788			1424					17		8
Lane group cap.	493	2855			1533					197		176
v/c ratio	0.08	0.63			0.93					0.09		0.05
Green ratio	0.29	0.76			0.41					0.12		0.12
Unif. delay d1	21.7	4.5			23.8					33.4		33.3
Delay factor k	0.11	0.21			0.44					0.11		0.11
Increm. delay d2	0.1	0.4			10.3					0.2		0.1
PF factor	0.722	0.213			0.533					0.911		0.911
Control delay	15.7	1.4			23.0					30.6		30.4
Lane group LOS	B	A			C					C		C
Apprch. delay	1.7			23.0						30.6		
Approach LOS	A			C						C		
Intersec. delay	11.2			Intersection LOS						B		

HCS2000™ Copyright © 2000 University of Florida, All Rights Reserved Version 4.1f

PRIORITY ENGINEERING, INC.

INTERSECTION TURNING MOVEMENTS REDUCTION SHEET

TION: Leucadia Blvd and Sidonia St
Carlsbad, CA

DATE OF COUNT: Tue. 1/3/06
TIME OF COUNT: PM Peak

COUNTED BY: JG
WEATHER: Clear

TIME INTERVAL ENDING AT	FROM NORTH ON (SB) Sidonia St				FROM SOUTH ON (NB) N/A				FROM EAST ON (WB) Leucadia Blvd				FROM WEST ON (EB) Leucadia Blvd				INTERVAL TOTALS
	Right	Thru	Left	Peds	Right	Thru	Left	Peds	Right	Thru	Left	Peds	Right	Thru	Left	Peds	
04:15 PM	2	0	5	0	0	0	0	0	8	370	0	0	0	353	10	0	748
04:30 PM	3	0	1	0	0	0	0	0	2	333	0	0	0	352	6	0	697
04:45 PM	2	0	9	0	0	0	0	0	2	330	0	0	0	396	2	0	741
05:00 PM	1	0	3	0	0	0	0	0	3	341	0	0	0	424	6	0	778
05:15 PM	3	0	4	0	0	0	0	0	4	333	0	0	0	415	16	0	775
05:30 PM	4	0	6	0	0	0	0	0	11	343	0	0	0	436	7	0	807
05:45 PM	0	0	3	0	0	0	0	0	7	311	0	0	0	424	6	0	751
06:00 PM	2	0	5	0	0	0	0	0	3	282	0	0	0	332	7	0	631
PEAK HOUR TOTALS	8	0	16	0	0	0	0	0	25	1328	0	0	0	1699	35	0	INTERSECTION
ALL MOVEMENTS	24				0				1353				1734				3111
PEAK HOUR FACTOR	0.60				#DIV/0!				0.96				0.98				0.96

S = Pedestrians Across Intersection Leg
= Peak Hour Factor

PM PEAK HOUR: 4:45 PM TO 5:45 PM

UCED BY: JR

DATE OF REDUCTION: 1/15/2006

PRIORITY ENGINEERING, INC.

INTERSECTION TURNING MOVEMENTS REDUCTION SHEET

TURNING MOVEMENTS DIAGRAM

PM PEAK HOUR ENDING AT 5:45 PM

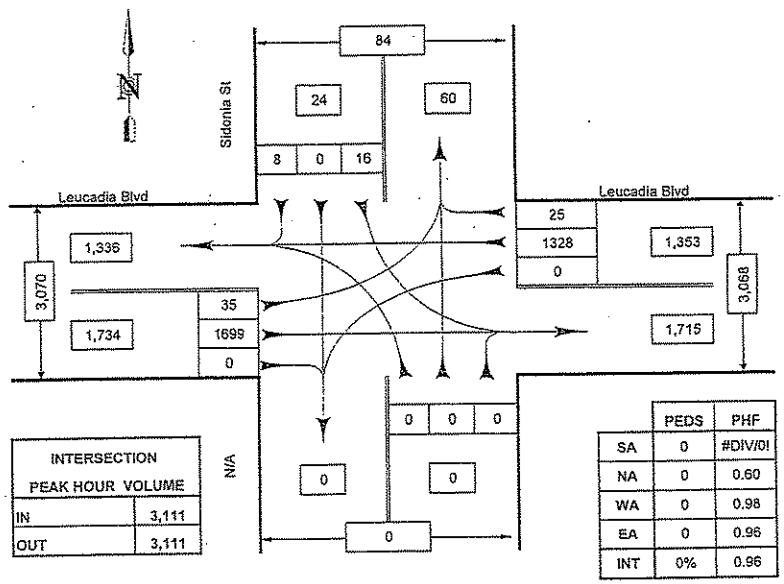

INTERSECTION PEAK HOUR VOLUME	
IN	3,111
OUT	3,111

	PEDS	PHF
SA	0	#DIV/0!
NA	0	0.60
WA	0	0.98
EA	0	0.96
INT	0%	0.96

PEDS = Pedestrians
PHF = Peak Hour Factor

Leucadia Blvd and Sidonia St

Carlsbad, CA

COUNTED BY: JG

REDUCED BY: JR

DATE: 1/15/2006

DATE OF COUNT: 1/3/06

TIME OF COUNT: PM Peak

WEATHER: Clear

N
X
D
1
2

33-A EX

SHORT REPORT

General Information		Site Information	
Analyst	USAI	Intersection	LEUCADIA BLVD/QUAIL GARDENS DR
Agency or Co.	USAI	Area Type	All other areas
Date Performed	09/08/08	Jurisdiction	ENCINITAS
Time Period	AM PEAK HOUR	Analysis Year	EXISTING

Volume and Timing Input

	EB			WB			NB			SB		
	LT	TH	RT	LT	TH	RT	LT	TH	RT	LT	TH	RT
Num. of Lanes	1	2	0	1	2	0	1	1	1	1	1	1
Lane group	L	TR		L	TR		L	T	R	L	T	R
Volume (vph)	30	1434	116	349	1330	16	120	23	40	57	77	10
% Heavy veh	2	2	2	2	2	2	2	2	2	2	2	2
PHF	0.95	0.95	0.95	0.95	0.95	0.95	0.95	0.95	0.95	0.95	0.95	0.95
Actuated (P/A)	A	A	A	A	A	A	A	A	A	A	A	A
Startup lost time	2.0	2.0		2.0	2.0		2.0	2.0	2.0	2.0	2.0	2.0
Ext. eff. green	2.0	2.0		2.0	2.0		2.0	2.0	2.0	2.0	2.0	2.0
Arrival type	5	5		5	5		5	5	5	5	5	5
Unit Extension	3.0	3.0		3.0	3.0		3.0	3.0	3.0	3.0	3.0	3.0
Ped/Bike/RTOR Volume	0		60	0	0	0	0	0	0	0	0	0
Lane Width	12.0	12.0		12.0	12.0		12.0	12.0	12.0	12.0	12.0	12.0
Parking/Grade/Parking	N	0	N	N	0	N	N	0	N	N	0	N
Parking/hr												
Bus stops/hr	0	0		0	0		0	0	0	0	0	0
Unit Extension	3.0	3.0		3.0	3.0		3.0	3.0	3.0	3.0	3.0	3.0

Phasing	Excl. Left	Thru & RT	03	04	Excl. Left	Thru & RT	07	08
Timing	G = 27.0	G = 52.0	G = 0.0	G =	G = 11.0	G = 8.0	G = 0.0	G =
	Y = 5	Y = 5	Y =	Y =	Y = 5	Y = 5	Y =	Y =
Duration of Analysis (hrs) = 0.25						Cycle Length C = 118.0		

Lane Group Capacity, Control Delay, and LOS Determination

	EB			WB			NB			SB		
Adj. flow rate	32	1568		367	1417		126	24	42	60	81	11
Lane group cap.	383	1636		383	1642		156	133	102	156	133	102
v/c ratio	0.08	0.96		0.96	0.86		0.81	0.18	0.41	0.38	0.61	0.11
Green ratio	0.23	0.44		0.23	0.44		0.09	0.07	0.07	0.09	0.07	0.07
Unif. delay d1	35.8	32.0		44.9	29.8		52.5	51.9	52.7	50.3	53.5	51.6
Delay factor k	0.11	0.47		0.47	0.39		0.35	0.11	0.11	0.11	0.20	0.11
Increm. delay d2	0.1	13.7		35.1	5.0		26.1	0.7	2.7	1.6	7.9	0.5
PF factor	0.802	0.475		0.802	0.475		0.931	0.952	0.952	0.931	0.952	0.952
Control delay	28.8	28.9		71.2	19.2		74.9	50.0	52.9	48.4	58.8	49.6
Lane group LOS	C	C		E	B		E	D	D	D	E	D
Apprch. delay	28.9			29.9			67.0			54.0		
Approach LOS	C			C			E			D		
Intersec. delay	32.3			Intersection LOS						C		

HCS2000™ Copyright © 2000 University of Florida, All Rights Reserved Version 4.1f

PRIORITY ENGINEERING, INC.

INTERSECTION TURNING MOVEMENTS REDUCTION SHEET

OCATION: Leucadia Blvd and Quail Gardens Dr
Carlsbad, CA

DATE OF COUNT: Wed. 1/4/06
TIME OF COUNT: AM Peak

COUNTED BY: MM
WEATHER: Clear

TIME INTERVAL ENDING AT	FROM NORTH ON (SB) Quail Gardens Dr				FROM SOUTH ON (NB) Quail Gardens Dr				FROM EAST ON (WB) Leucadia Blvd				FROM WEST ON (EB) Leucadia Blvd				INTERVAL TOTALS
	Right	Thru	Left	Peds	Right	Thru	Left	Peds	Right	Thru	Left	Peds	Right	Thru	Left	Peds	
07:15 AM	2	10	11	0	19	1	13	0	5	156	55	0	23	146	6	0	449
07:30 AM	2	24	19	0	16	3	14	0	1	109	80	0	19	136	5	0	428
07:45 AM	1	22	7	0	9	3	39	0	6	287	122	0	31	293	1	0	821
08:00 AM	1	28	33	0	13	8	34	0	2	226	131	0	39	274	3	0	792
08:15 AM	4	13	11	0	6	2	15	0	3	408	55	0	24	445	11	0	997
08:30 AM	4	14	6	0	12	10	32	0	5	408	41	0	22	422	15	0	992
08:45 AM	0	4	6	0	11	3	21	0	2	352	53	0	9	336	1	0	698
09:00 AM	8	3	6	0	16	1	21	0	1	349	50	0	12	312	2	0	781
PEAK HOUR TOTALS	10	77	57	0	46	23	120	0	16	1330	349	0	116	1434	30	0	INTERSECTION
ALL MOVEMENTS	144				183				1695				1580				3602
PEAK HOUR FACTOR	0.58				0.83				0.91				0.82				0.90

DS = Pedestrians Across Intersection Leg
F = Peak Hour Factor

AM PEAK HOUR: 7:30 AM TO 8:30 AM

DUCED BY: JR

DATE OF REDUCTION: 1/15/2006

PRIORITY ENGINEERING, INC.

INTERSECTION TURNING MOVEMENTS REDUCTION SHEET

TURNING MOVEMENTS DIAGRAM
AM PEAK HOUR ENDING AT 8:30 AM

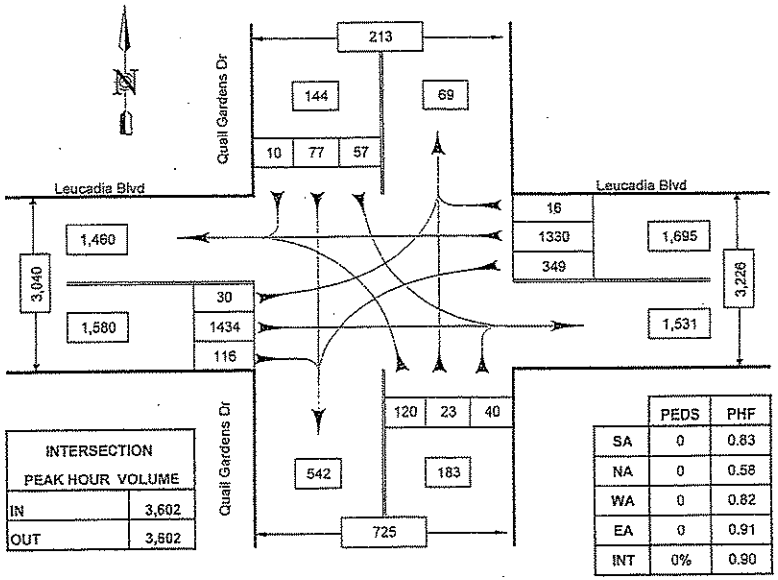

INTERSECTION PEAK HOUR VOLUME	
IN	3,602
OUT	3,602

	PEDS	PHF
SA	0	0.83
NA	0	0.58
WA	0	0.82
EA	0	0.91
INT	0%	0.90

PEDS = Pedestrians
PHF = Peak Hour Factor

Leucadia Blvd and Quail Gardens Dr

Carlsbad, CA

COUNTED BY: MM
REDUCED BY: JR
DATE: 1/15/2006

DATE OF COUNT: 1/4/06
TIME OF COUNT: AM Peak
WEATHER: Clear

23-A

33-PEX

SHORT REPORT

General Information		Site Information	
Analyst	USAI	Intersection	LEUCADIA BLVD/QUAIL GARDENS DR
Agency or Co.	USAI	Area Type	All other areas
Date Performed	09/08/08	Jurisdiction	ENCINITAS
Time Period	PM PEAK HOUR	Analysis Year	EXISTING

Volume and Timing Input

	EB			WB			NB			SB		
	LT	TH	RT	LT	TH	RT	LT	TH	RT	LT	TH	RT
Num. of Lanes	1	2	0	1	2	0	1	1	1	1	1	1
Lane group	L	TR		L	TR		L	T	R	L	T	R
Volume (vph)	10	1895	76	212	1624	50	85	24	161	85	23	32
% Heavy veh	2	2	2	2	2	2	2	2	2	2	2	2
PHF	0.95	0.95	0.95	0.95	0.95	0.95	0.95	0.95	0.95	0.95	0.95	0.95
Actuated (P/A)	A	A	A	A	A	A	A	A	A	A	A	A
Startup lost time	2.0	2.0		2.0	2.0		2.0	2.0	2.0	2.0	2.0	2.0
Ext. eff. green	2.0	2.0		2.0	2.0		2.0	2.0	2.0	2.0	2.0	2.0
Arrival type	5	5		5	5		5	5	5	5	5	5
Unit Extension	3.0	3.0		3.0	3.0		3.0	3.0	3.0	3.0	3.0	3.0
Ped/Bike/RTOR Volume	0		0	0	0	0	0	0	0	0	0	0
Lane Width	12.0	12.0		12.0	12.0		12.0	12.0	12.0	12.0	12.0	12.0
Parking/Grade/Parking	N	0	N	N	0	N	N	0	N	N	0	N
Parking/hr												
Bus stops/hr	0	0		0	0		0	0	0	0	0	0
Unit Extension	3.0	3.0		3.0	3.0		3.0	3.0	3.0	3.0	3.0	3.0

Phasing	Excl. Left	Thru & RT	03	04	Excl. Left	Thru & RT	07	08
Timing	G = 18.0	G = 66.0	G = 0.0	G =	G = 9.0	G = 7.0	G = 0.0	G =
	Y = 5	Y = 5	Y =	Y =	Y = 5	Y = 5	Y =	Y =

Duration of Analysis (hrs) = 0.25 Cycle Length C = 120.0

Lane Group Capacity, Control Delay, and LOS Determination

	EB			WB			NB			SB		
Adj. flow rate	11	2075		223	1762		89	25	169	89	24	34
Lane group cap.	251	2042		251	2044		126	114	375	126	114	88
v/c ratio	0.04	1.02		0.89	0.86		0.71	0.22	0.45	0.71	0.21	0.39
Green ratio	0.15	0.55		0.15	0.55		0.08	0.06	0.25	0.08	0.06	0.06
Unif. delay d1	43.6	27.0		50.0	23.1		54.2	53.9	38.0	54.2	53.9	54.4
Delay factor k	0.11	0.50		0.41	0.39		0.27	0.11	0.11	0.27	0.11	0.11
Increm. delay d2	0.1	24.0		29.7	4.1		16.5	1.0	0.9	16.5	0.9	2.8
PF factor	0.882	0.185		0.882	0.185		0.946	0.959	0.778	0.946	0.959	0.959
Control delay	38.6	29.0		73.8	8.3		67.8	52.6	30.4	67.8	52.6	55.0
Lane group LOS	D	C		E	A		E	D	C	E	D	D
Apprch. delay	29.1			15.7			44.2			62.4		
Approach LOS	C			B			D			E		
Intersec. delay	25.2			Intersection LOS						C		

Copyright © 2000 University of Florida, All Rights Reserved

PRIORITY ENGINEERING, INC.

INTERSECTION TURNING MOVEMENTS REDUCTION SHEET

:ATION: Leucadia Blvd and Quail Gardens Dr · Carlsbad, CA

DATE OF COUNT: Wed. 1/4/06
TIME OF COUNT: PM Peak

COUNTED BY: MM
WEATHER: Clear

TIME INTERVAL ENDING AT	FROM NORTH ON (SB) Quail Gardens Dr				FROM SOUTH ON (NB) Quail Gardens Dr				FROM EAST ON (WB) Leucadia Blvd				FROM WEST ON (EB) Leucadia Blvd				INTERVAL TOTALS
	Right	Thru	Left	Peds	Right	Thru	Left	Peds	Right	Thru	Left	Peds	Right	Thru	Left	Peds	
04:15 PM	15	10	27	0	27	11	35	0	10	451	55	0	29	472	3	0	1145
04:30 PM	9	4	30	0	25	13	26	0	12	434	44	0	22	482	5	0	1106
04:45 PM	20	1	16	0	15	5	13	0	4	259	31	0	27	335	2	0	728
05:00 PM	6	8	17	0	31	2	21	0	9	263	39	0	21	367	0	0	784
05:15 PM	11	8	24	0	59	8	15	0	18	406	62	0	20	440	7	0	1078
05:30 PM	11	7	30	0	30	9	25	0	16	470	64	0	19	545	0	0	1226
05:45 PM	3	6	20	0	33	5	27	0	8	371	50	0	24	532	1	0	1080
06:00 PM	7	2	11	0	39	2	18	0	8	377	36	0	13	378	2	0	893
PEAK HOUR TOTALS	32	23	85	0	161	24	85	0	50	1624	212	0	76	1895	10	0	INTERSECTION
ALL MOVEMENTS	140				270				1886				1981				4277
PEAK HOUR FACTOR	0.73				0.82				0.86				0.88				0.87

)S = Pedestrians Across Intersection Leg
F = Peak Hour Factor

PM PEAK HOUR: 5:00 PM TO 6:00 PM

DUCED BY: JR

DATE OF REDUCTION: 1/15/2006

PRIORITY ENGINEERING, INC.

INTERSECTION TURNING MOVEMENTS REDUCTION SHEET

TURNING MOVEMENTS DIAGRAM

PM PEAK HOUR ENDING AT 6:00 PM

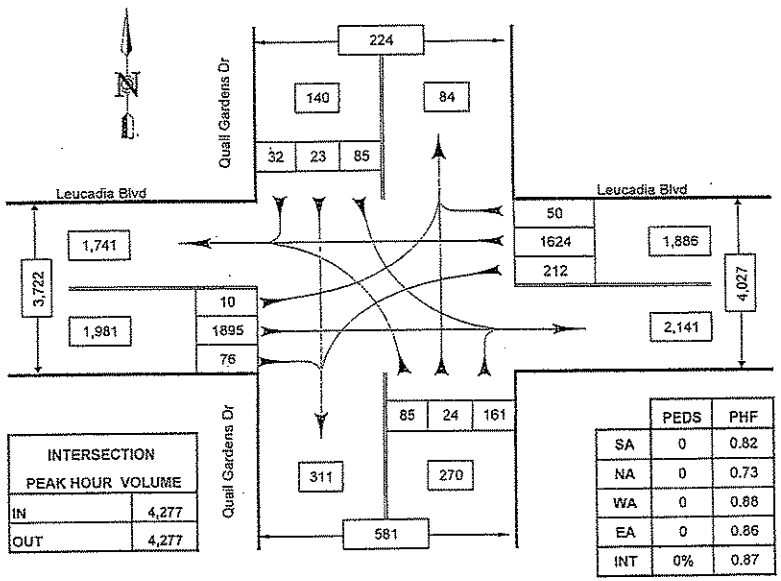

INTERSECTION PEAK HOUR VOLUME	
IN	4,277
OUT	4,277

	PEDS	PHF
SA	0	0.82
NA	0	0.73
WA	0	0.88
EA	0	0.86
INT	0%	0.87

PEDS = Pedestrians
PHF = Peak Hour Factor

Leucadia Blvd and Quail Gardens Dr

Carlsbad, CA

COUNTED BY: MM
REDUCED BY: JR
DATE: 1/15/2006

DATE OF COUNT: 1/4/06
TIME OF COUNT: PM Peak
WEATHER: Clear

EX 3-3-8

3A-A EX

SHORT REPORT

General Information		Site Information	
Analyst	USAI	Intersection	LEUCADIA BLVD/GARDEN VIEW RD.
Agency or Co.	USAI	Area Type	All other areas
Date Performed	09/08/08	Jurisdiction	ENCINITAS
Time Period	AM PEAK HOUR	Analysis Year	EXISTING

Volume and Timing Input

	EB			WB			NB			SB		
	LT	TH	RT	LT	TH	RT	LT	TH	RT	LT	TH	RT
Num. of Lanes	2	2	0	2	2	0	2	2	0	2	2	0
Lane group	L	TR		L	TR		L	TR		L	TR	
Volume (vph)	144	649	297	241	871	19	212	114	31	9	260	281
% Heavy veh	2	2	2	2	2	2	2	2	2	2	2	2
PHF	0.95	0.95	0.95	0.95	0.95	0.95	0.95	0.95	0.95	0.95	0.95	0.95
Actuated (P/A)	A	A	A	A	A	A	A	A	A	A	A	A
Startup lost time	2.0	2.0		2.0	2.0		2.0	2.0		2.0	2.0	
Ext. eff. green	2.0	2.0		2.0	2.0		2.0	2.0		2.0	2.0	
Arrival type	5	5		5	5		5	5		5	5	
Unit Extension	3.0	3.0		3.0	3.0		3.0	3.0		3.0	3.0	
Ped/Bike/RTOR Volume	0		65	0	0	0	0	0	0	0	0	100
Lane Width	12.0	12.0		12.0	12.0		12.0	12.0		12.0	12.0	
Parking/Grade/Parking	N	0	N	N	0	N	N	0	N	N	0	N
Parking/hr												
Bus stops/hr	0	0		0	0		0	0		0	0	
Unit Extension	3.0	3.0		3.0	3.0		3.0	3.0		3.0	3.0	

Phasing	Excl. Left	Thru & RT	03	04	Excl. Left	Thru & RT	07	08
Timing	G = 15.0	G = 50.0	G = 0.0	G =	G = 12.0	G = 20.0	G = 0.0	G =
	Y = 5	Y = 5	Y =	Y =	Y = 4	Y = 4	Y =	Y =
Duration of Analysis (hrs) = 0.25					Cycle Length C = 115.0			

Lane Group Capacity, Control Delay, and LOS Determination

	EB			WB			NB			SB		
Adj. flow rate	152	927		254	937		223	153		9	465	
Lane group cap.	425	1559		433	1650		340	641		340	609	
v/c ratio	0.36	0.59		0.59	0.57		0.66	0.24		0.03	0.76	
Green ratio	0.13	0.43		0.13	0.43		0.10	0.17		0.10	0.17	
Unif. delay d1	45.6	24.8		47.1	24.4		49.5	40.9		46.3	45.2	
Delay factor k	0.11	0.18		0.18	0.16		0.23	0.11		0.11	0.32	
Increm. delay d2	0.5	0.6		1.5	0.3		4.5	0.2		0.0	5.7	
PF factor	0.900	0.487		0.900	0.487		0.922	0.860		0.922	0.860	
Control delay	41.6	12.7		43.8	12.2		50.2	35.4		42.7	44.6	
Lane group LOS	D	B		D	B		D	D		D	D	
Apprch. delay	16.8			19.0			44.2			44.6		
Approach LOS	B			B			D			D		
Intersec. delay	25.1			Intersection LOS						C		

HCS2000™ Copyright © 2000 University of Florida, All Rights Reserved Version 4.1f

PRIORITY ENGINEERING, INC.

INTERSECTION TURNING MOVEMENTS REDUCTION SHEET

ATION: Leucadia Blvd and Garden View Rd
Carlsbad, CA

DATE OF COUNT: Wed. 1/4/06
TIME OF COUNT: AM Peak

COUNTED BY: BW
WEATHER: Clear

TIME INTERVAL ENDING AT	FROM NORTH ON (SB) Garden View Rd				FROM SOUTH ON (NB) Garden View Rd				FROM EAST ON (WB) Leucadia Blvd				FROM WEST ON (EB) Leucadia Blvd				INTERVAL TOTALS
	Right	Thru	Left	Peds	Right	Thru	Left	Peds	Right	Thru	Left	Peds	Right	Thru	Left	Peds	
07:15 AM	39	30	1	0	1	9	33	0	3	178	31	0	39	141	30	0	535
07:30 AM	58	90	2	0	7	20	30	0	3	177	57	0	47	182	35	0	718
07:45 AM	76	62	2	0	7	38	58	0	6	239	71	0	74	160	37	0	830
08:00 AM	82	68	2	0	5	34	56	0	5	232	57	0	94	165	45	0	846
08:15 AM	65	40	3	0	12	22	68	0	4	223	46	0	82	142	27	0	734
08:30 AM	42	33	4	0	10	7	64	0	4	187	24	0	89	184	23	0	671
08:45 AM	48	29	4	0	12	25	46	0	7	213	24	0	53	131	27	0	619
09:00 AM	46	25	6	0	4	30	47	0	7	232	26	0	51	155	31	0	660
PEAK HOUR TOTALS	281	260	9	0	31	114	212	0	19	871	241	0	297	649	144	0	INTERSECTION
ALL MOVEMENTS	550				357				1131				1090				3128
PEAK HOUR FACTOR	0.90				0.87				0.89				0.90				0.92

S = Pedestrians Across Intersection Leg
= Peak Hour Factor

AM PEAK HOUR: 7:15 AM TO 8:15 AM

UCED BY: JR

DATE OF REDUCTION: 1/15/2006

PRIORITY ENGINEERING, INC.

INTERSECTION TURNING MOVEMENTS REDUCTION SHEET

TURNING MOVEMENTS DIAGRAM

AM PEAK HOUR ENDING AT 8:15 AM

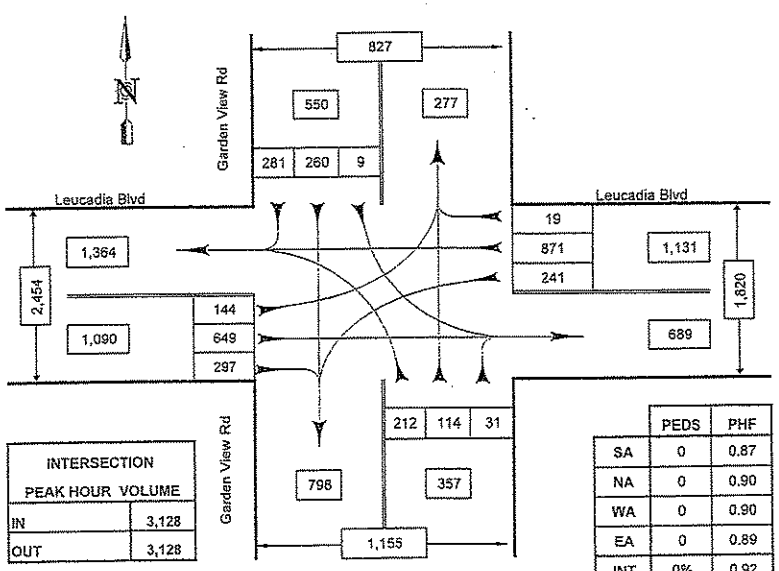

INTERSECTION PEAK HOUR VOLUME	
IN	3,128
OUT	3,128

	PEDS	PHF
SA	0	0.87
NA	0	0.90
WA	0	0.90
EA	0	0.89
INT	0%	0.92

PEDS = Pedestrians
PHF = Peak Hour Factor

Leucadia Blvd and Garden View Rd

Carlsbad, CA

COUNTED BY: BW

REDUCED BY: JR

DATE: 1/15/2006

DATE OF COUNT: 1/4/06

TIME OF COUNT: AM Peak

WEATHER: Clear

34-A

3A-PEX

SHORT REPORT

General Information		Site Information	
Analyst	USAI	Intersection	LEUCADIA BLVD/GARDEN VIEW RD.
Agency or Co.	USAI	Area Type	All other areas
Date Performed	09/08/08	Jurisdiction	ENCINITAS
Time Period	PM PEAK HOUR	Analysis Year	EXISTING

Volume and Timing Input

	EB			WB			NB			SB		
	LT	TH	RT	LT	TH	RT	LT	TH	RT	LT	TH	RT
Num. of Lanes	2	2	0	2	2	0	2	2	0	2	2	0
Lane group	L	TR		L	TR		L	TR		L	TR	
Volume (vph)	301	1112	321	110	869	84	297	147	53	99	158	221
% Heavy veh	2	2	2	2	2	2	2	2	2	2	2	2
PHF	0.95	0.95	0.95	0.95	0.95	0.95	0.95	0.95	0.95	0.95	0.95	0.95
Actuated (P/A)	A	A	A	A	A	A	A	A	A	A	A	A
Startup lost time	2.0	2.0		2.0	2.0		2.0	2.0		2.0	2.0	
Ext. eff. green	2.0	2.0		2.0	2.0		2.0	2.0		2.0	2.0	
Arrival type	5	5		5	5		5	5		5	5	
Unit Extension	3.0	3.0		3.0	3.0		3.0	3.0		3.0	3.0	
Ped/Bike/RTOR Volume	0		65	0	0	0	0	0	0	0	0	100
Lane Width	12.0	12.0		12.0	12.0		12.0	12.0		12.0	12.0	
Parking/Grade/Parking	N	0	N	N	0	N	N	0	N	N	0	N
Parking/hr												
Bus stops/hr	0	0		0	0		0	0		0	0	
Unit Extension	3.0	3.0		3.0	3.0		3.0	3.0		3.0	3.0	

Phasing	Excl. Left	Thru & RT	03	04	Excl. Left	Thru & RT	07	08
Timing	G = 15.0	G = 50.0	G = 0.0	G =	G = 12.0	G = 18.0	G = 0.0	G =
	Y = 5	Y = 5	Y =	Y =	Y = 5	Y = 5	Y =	Y =
Duration of Analysis (hrs) = 0.25						Cycle Length C = 115.0		

Lane Group Capacity, Control Delay, and LOS Determination

	EB			WB			NB			SB		
Adj. flow rate	317	1440		116	1003		313	211		104	293	
Lane group cap.	425	1578		425	1602		340	561		340	546	
v/c ratio	0.75	0.91		0.27	0.63		0.92	0.38		0.31	0.54	
Green ratio	0.13	0.43		0.13	0.43		0.10	0.16		0.10	0.16	
Unif. delay d1	48.2	30.5		45.1	25.2		51.0	43.5		47.6	44.7	
Delay factor k	0.30	0.43		0.11	0.21		0.44	0.11		0.11	0.14	
Increm. delay d2	7.1	8.5		0.3	0.8		29.5	0.4		0.5	1.1	
PF factor	0.900	0.487		0.900	0.487		0.922	0.876		0.922	0.876	
Control delay	50.4	23.3		40.9	13.1		76.5	38.5		44.5	40.2	
Lane group LOS	D	C		D	B		E	D		D	D	
Apprch. delay	28.2			16.0			61.2			41.3		
Approach LOS	C			B			E			D		
Intersec. delay	30.5			Intersection LOS						C		

HCS2000™ Copyright © 2000 University of Florida, All Rights Reserved Version 4.1f

PRIORITY ENGINEERING, INC.

INTERSECTION TURNING MOVEMENTS REDUCTION SHEET

.TION: Leucadia Blvd and Garden View Rd
Carlsbad, CA

DATE OF COUNT: Wed. 1/4/06
TIME OF COUNT: PM Peak

COUNTED BY: BW
WEATHER: Clear

TIME INTERVAL ENDING AT	FROM NORTH ON (SB) Garden View Rd				FROM SOUTH ON (NB) Garden View Rd				FROM EAST ON (WB) Leucadia Blvd				FROM WEST ON (EB) Leucadia Blvd				INTERVAL TOTALS
	Right	Thru	Left	Peds	Right	Thru	Left	Peds	Right	Thru	Left	Peds	Right	Thru	Left	Peds	
04:15 PM	56	36	31	0	9	35	53	0	24	221	38	0	91	268	47	0	909
04:30 PM	52	42	31	0	10	24	70	0	24	221	29	0	84	254	68	0	909
04:45 PM	63	47	26	0	12	43	67	0	22	220	20	0	74	286	59	0	939
05:00 PM	51	35	18	0	18	42	61	0	26	221	27	0	85	308	95	0	987
05:15 PM	55	34	24	0	13	38	99	0	12	207	34	0	78	264	79	0	937
05:30 PM	30	43	30	0	11	27	67	0	20	202	22	0	87	252	85	0	885
05:45 PM	48	36	21	0	8	33	76	0	17	210	16	0	71	241	78	0	855
06:00 PM	38	30	16	0	12	19	58	0	22	193	16	0	61	218	70	0	753
PEAK HOUR TOTALS	221	158	99	0	53	147	297	0	84	669	110	0	321	1112	301	0	INTERSECTION
ALL MOVEMENTS	478				497				1063				1734				3772
PEAK HOUR FACTOR	0.88				0.83				0.97				0.89				0.96

; = Pedestrians Across Intersection Leg
= Peak Hour Factor

PM PEAK HOUR: 4:15 PM TO 5:15 PM

JCED BY: JR

DATE OF REDUCTION: 1/15/2006

PRIORITY ENGINEERING, INC.

INTERSECTION TURNING MOVEMENTS REDUCTION SHEET

TURNING MOVEMENTS DIAGRAM

PM PEAK HOUR ENDING AT 5:15 PM

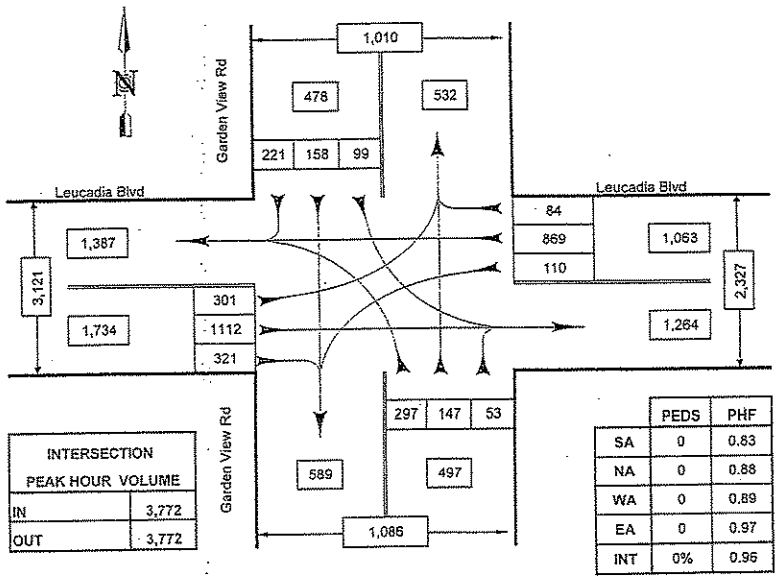

INTERSECTION PEAK HOUR VOLUME	
IN	3,772
OUT	3,772

	PEDS	PHF
SA	0	0.83
NA	0	0.88
WA	0	0.89
EA	0	0.97
INT	0%	0.96

PEDS = Pedestrians
PHF = Peak Hour Factor

Leucadia Blvd and Garden View Rd

Carlsbad, CA

COUNTED BY: BW

REDUCED BY: JR

DATE: 1/15/2006

DATE OF COUNT: 1/4/06

TIME OF COUNT: PM Peak

WEATHER: Clear

34-B
Ex

35-A EX

SHORT REPORT

General Information		Site Information	
Analyst	USAI	Intersection	LEUCADIA BLVD/TOWN CENTER PL.
Agency or Co.	USAI	Area Type	All other areas
Date Performed	09/08/08	Jurisdiction	ENCINITAS
Time Period	AM PEAK HOUR	Analysis Year	EXISTING

Volume and Timing Input

	EB			WB			NB			SB		
	LT	TH	RT	LT	TH	RT	LT	TH	RT	LT	TH	RT
Num. of Lanes	2	2	1	2	2	1	1	2	0	1	1	1
Lane group	L	T	R	L	T	R	L	LTR		L	LT	R
Volume (vph)	28	567	133	206	948	114	78	14	61	73	10	82
% Heavy veh	2	2	2	2	2	2	2	2	2	2	2	2
PHF	0.95	0.95	0.95	0.95	0.95	0.95	0.95	0.95	0.95	0.95	0.95	0.95
Actuated (P/A)	A	A	A	A	A	A	A	A	A	A	A	A
Startup lost time	2.0	2.0	2.0	2.0	2.0	2.0	2.0	2.0		2.0	2.0	2.0
Ext. eff. green	2.0	2.0	2.0	2.0	2.0	2.0	2.0	2.0		2.0	2.0	2.0
Arrival type	5	5	5	5	5	5	5	5		5	5	5
Unit Extension	3.0	3.0	3.0	3.0	3.0	3.0	3.0	3.0		3.0	3.0	3.0
Ped/Bike/RTOR Volume	0		0	0	0	0	0	0	0	0	0	0
Lane Width	12.0	12.0	12.0	12.0	12.0	12.0	12.0	12.0		12.0	12.0	12.0
Parking/Grade/Parking	N	0	N	N	0	N	N	0	N	N	0	N
Parking/hr												
Bus stops/hr	0	0	0	0	0	0	0	0		0	0	0
Unit Extension	3.0	3.0	3.0	3.0	3.0	3.0	3.0	3.0		3.0	3.0	3.0

Phasing	Excl. Left	Thru & RT	03	04	SB Only	NB Only	07	08
Timing	G = 15.0	G = 50.0	G = 0.0	G =	G = 12.0	G = 20.0	G = 0.0	G =
	Y = 5	Y = 5	Y =	Y =	Y = 5	Y = 5	Y =	Y =

Duration of Analysis (hrs) = 0.25 | Cycle Length C = 117.0

Lane Group Capacity, Control Delay, and LOS Determination

	EB			WB			NB			SB		
Adj. flow rate	29	597	140	217	998	120	57	104		54	34	86
Lane group cap.	417	1595	641	417	1595	641	286	572		172	194	154
v/c ratio	0.07	0.37	0.22	0.52	0.63	0.19	0.20	0.18		0.31	0.18	0.56
Green ratio	0.13	0.43	0.43	0.13	0.43	0.43	0.17	0.17		0.10	0.10	0.10
Unif. delay d1	44.9	22.8	21.2	47.6	26.2	20.9	41.6	41.5		48.7	48.0	50.0
Delay factor k	0.11	0.11	0.11	0.13	0.21	0.11	0.11	0.11		0.11	0.11	0.16
Increm. delay d2	0.1	0.1	0.2	1.2	0.8	0.1	0.3	0.2		1.1	0.4	4.5
PF factor	0.902	0.502	0.502	0.902	0.502	0.502	0.863	0.863		0.924	0.924	0.924
Control delay	40.5	11.6	10.8	44.1	13.9	10.6	36.2	35.9		46.0	44.8	50.7
Lane group LOS	D	B	B	D	B	B	D	D		D	D	D
Apprch. delay	12.6			18.6			36.1			48.1		
Approach LOS	B			B			D			D		
Intersec. delay	19.9			Intersection LOS						B		

HCS2000™

Copyright © 2000 University of Florida, All Rights Reserved

Version 4.1f

PRIORITY ENGINEERING, INC.

INTERSECTION TURNING MOVEMENTS REDUCTION SHEET

CATION: Leucadia Blvd and Town Center Pl
Carlsbad, CA

DATE OF COUNT: Wed. 1/4/06
TIME OF COUNT: AM Peak

COUNTED BY: JG
WEATHER: Clear

TIME INTERVAL ENDING AT	FROM NORTH ON (SB) Town Center Pl				FROM SOUTH ON (NB) Town Center Pl				FROM EAST ON (WB) Leucadia Blvd				FROM WEST ON (EB) Leucadia Blvd				INTERVAL TOTALS
	Right	Thru	Left	Peds	Right	Thru	Left	Peds	Right	Thru	Left	Peds	Right	Thru	Left	Peds	
07:15 AM	17	5	6	0	16	2	24	0	29	160	31	0	16	140	10	0	476
07:30 AM	17	0	18	0	17	4	16	0	18	215	53	0	22	153	5	0	538
07:45 AM	20	1	19	0	14	2	10	0	23	277	46	0	24	137	7	0	580
08:00 AM	26	3	20	0	13	4	20	0	39	242	63	0	31	152	8	0	621
08:15 AM	22	1	16	0	15	5	16	0	32	258	42	0	39	118	7	0	571
08:30 AM	14	5	18	0	19	3	32	0	20	171	55	0	39	160	6	0	542
08:45 AM	15	1	24	0	25	4	22	0	21	184	47	0	27	121	22	0	513
09:00 AM	20	4	15	0	29	6	24	0	32	212	49	0	37	119	13	0	560
PEAK HOUR TOTALS	82	10	73	0	61	14	78	0	114	948	206	0	133	567	28	0	INTERSECTION
ALL MOVEMENTS	165				153				1268				728				2314
PEAK HOUR FACTOR	0.84				0.71				0.92				0.89				0.93

DS = Pedestrians Across Intersection Leg
F = Peak Hour Factor

AM PEAK HOUR: 7:30 AM TO 8:30 AM

DUCED BY: JR

DATE OF REDUCTION: 1/15/2006

PRIORITY ENGINEERING, INC.

INTERSECTION TURNING MOVEMENTS REDUCTION SHEET

TURNING MOVEMENTS DIAGRAM

AM PEAK HOUR ENDING AT 8:30 AM

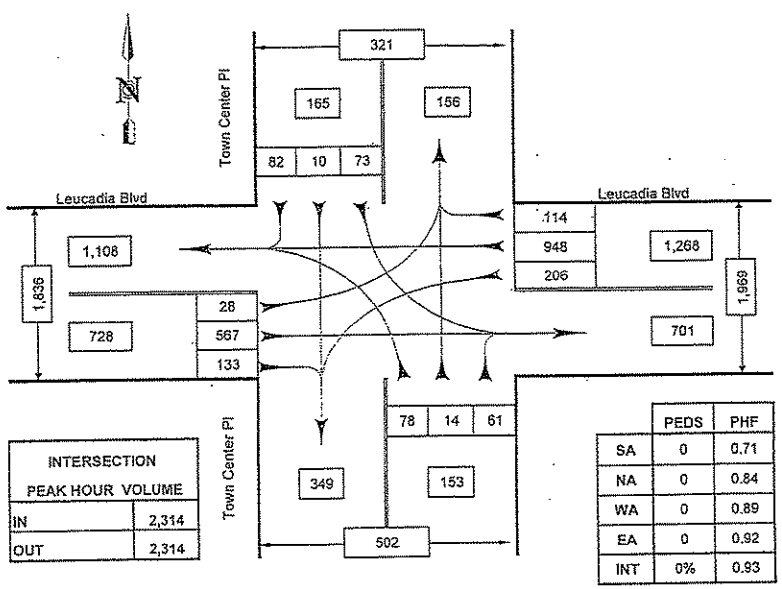

INTERSECTION PEAK HOUR VOLUME	
IN	2,314
OUT	2,314

	PEDS	PHF
SA	0	0.71
NA	0	0.84
WA	0	0.89
EA	0	0.92
INT	0%	0.93

PEDS = Pedestrians
PHF = Peak Hour Factor

Leucadia Blvd and Town Center Pl

Carlsbad, CA

COUNTED BY: JG

REDUCED BY: JR

DATE: 1/15/2006

DATE OF COUNT: 1/4/06

TIME OF COUNT: AM Peak

WEATHER: Clear

35-A
EX

35-P EX

SHORT REPORT

General Information		Site Information	
Analyst	USAI	Intersection	LEUCADIA BLVD/TOWN CENTER PL.
Agency or Co.	USAI	Area Type	All other areas
Date Performed	09/08/08	Jurisdiction	ENCINITAS
Time Period	PM PEAK HOUR	Analysis Year	EXISTING

Volume and Timing Input

	EB			WB			NB			SB		
	LT	TH	RT	LT	TH	RT	LT	TH	RT	LT	TH	RT
Num. of Lanes	2	2	1	2	2	1	1	2	0	1	1	1
Lane group	L	T	R	L	T	R	L	LTR		L	LT	R
Volume (vph)	154	866	216	240	621	131	257	56	283	141	49	56
% Heavy veh	2	2	2	2	2	2	2	2	2	2	2	2
PHF	0.95	0.95	0.95	0.95	0.95	0.95	0.95	0.95	0.95	0.95	0.95	0.95
Actuated (P/A)	A	A	A	A	A	A	A	A	A	A	A	A
Startup lost time	2.0	2.0	2.0	2.0	2.0	2.0	2.0	2.0		2.0	2.0	2.0
Ext. eff. green	2.0	2.0	2.0	2.0	2.0	2.0	2.0	2.0		2.0	2.0	2.0
Arrival type	5	5	5	5	5	5	5	5		5	5	5
Unit Extension	3.0	3.0	3.0	3.0	3.0	3.0	3.0	3.0		3.0	3.0	3.0
Ped/Bike/RTOR Volume	0		0	0	0	0	0	0	0	0	0	0
Lane Width	12.0	12.0	12.0	12.0	12.0	12.0	12.0	12.0		12.0	12.0	12.0
Parking/Grade/Parking	N	0	N	N	0	N	N	0	N	N	0	N
Parking/hr												
Bus stops/hr	0	0	0	0	0	0	0	0		0	0	0
Unit Extension	3.0	3.0	3.0	3.0	3.0	3.0	3.0	3.0		3.0	3.0	3.0

Phasing	Excl. Left	Thru & RT	03	04	SB Only	NB Only	07	08
Timing	G = 14.0	G = 51.0	G = 0.0	G =	G = 12.0	G = 20.0	G = 0.0	G =
	Y = 5	Y = 5	Y =	Y =	Y = 5	Y = 5	Y =	Y =
Duration of Analysis (hrs) = 0.25						Cycle Length C = 117.0		

Lane Group Capacity, Control Delay, and LOS Determination

	EB			WB			NB			SB		
Adj. flow rate	162	912	227	253	654	138	190	438		89	111	59
Lane group cap.	401	1676	673	401	1676	673	286	568		172	196	154
v/c ratio	0.40	0.54	0.34	0.63	0.39	0.21	0.66	0.77		0.52	0.57	0.38
Green ratio	0.12	0.44	0.44	0.12	0.44	0.44	0.17	0.17		0.10	0.10	0.10
Unif. delay d1	47.6	24.4	21.8	49.0	22.4	20.4	45.4	46.3		49.8	50.0	49.0
Delay factor k	0.11	0.14	0.11	0.21	0.11	0.11	0.24	0.32		0.12	0.16	0.11
Increm. delay d2	0.7	0.4	0.3	1.9	0.1	0.1	5.7	6.5		2.7	3.8	1.6
PF factor	0.909	0.485	0.485	0.909	0.485	0.485	0.863	0.863		0.924	0.924	0.924
Control delay	44.0	12.2	10.9	46.5	11.0	10.0	44.8	46.4		48.7	50.0	46.9
Lane group LOS	D	B	B	D	B	B	D	D		D	D	D
Apprch. delay	15.9			19.4			45.9			48.9		
Approach LOS	B			B			D			D		
Intersec. delay	25.5			Intersection LOS						C		

HCS2000™ Copyright © 2000 University of Florida, All Rights Reserved Version 4.1f

PRIORITY ENGINEERING, INC.

INTERSECTION TURNING MOVEMENTS REDUCTION SHEET

ATION: Leucadia Blvd and Town Center Pl
Carlsbad, CA

DATE OF COUNT: Wed. 1/4/06
TIME OF COUNT: PM Peak

COUNTED BY: JG
WEATHER: Clear

TIME INTERVAL ENDING AT	FROM NORTH ON (SB) Town Center Pl				FROM SOUTH ON (NB) Town Center Pl				FROM EAST ON (WB) Leucadia Blvd				FROM WEST ON (EB) Leucadia Blvd				INTERVAL TOTALS
	Right	Thru	Left	Peds	Right	Thru	Left	Peds	Right	Thru	Left	Peds	Right	Thru	Left	Peds	
04:15 PM	10	10	32	0	66	23	70	0	38	137	51	0	40	190	29	0	696
04:30 PM	20	14	40	0	59	15	65	0	31	157	72	0	42	198	50	0	761
04:45 PM	11	14	32	0	93	9	58	0	35	159	53	0	57	207	49	0	783
05:00 PM	13	7	33	0	67	22	70	0	36	151	47	0	55	224	19	0	744
05:15 PM	12	14	36	0	58	19	64	0	29	154	68	0	62	239	35	0	782
05:30 PM	8	12	35	0	48	19	97	0	36	147	50	0	46	197	17	0	712
05:45 PM	13	9	26	0	53	23	61	0	32	132	65	0	24	212	23	0	673
06:00 PM	13	7	20	0	70	17	56	0	20	132	51	0	38	183	22	0	629
PEAK HOUR TOTALS	56	49	141	0	283	55	257	0	131	621	240	0	216	866	154	0	INTERSECTION
ALL MOVEMENTS	246				595				992				1236				3070
PEAK HOUR FACTOR	0.83				0.90				0.95				0.92				0.98

S = Pedestrians Across Intersection Leg
= Peak Hour Factor

PM PEAK HOUR: 4:15 PM TO 5:15 PM

UCED BY: JR

DATE OF REDUCTION: 1/15/2006

PRIORITY ENGINEERING, INC.

INTERSECTION TURNING MOVEMENTS REDUCTION SHEET

TURNING MOVEMENTS DIAGRAM

PM PEAK HOUR ENDING AT 5:15 PM

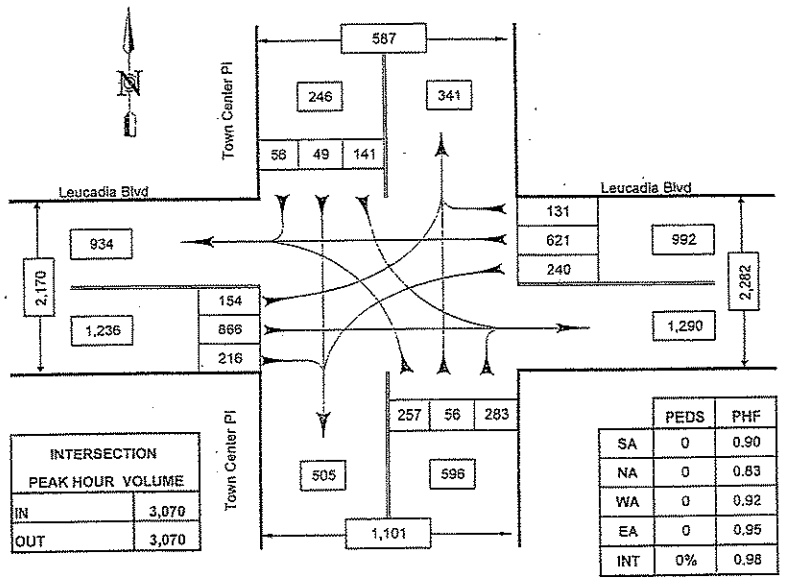

INTERSECTION PEAK HOUR VOLUME	
IN	3,070
OUT	3,070

	PEDS	PHF
SA	0	0.90
NA	0	0.83
WA	0	0.92
EA	0	0.95
INT	0%	0.98

PEDS = Pedestrians
PHF = Peak Hour Factor

Leucadia Blvd and Town Center Pl

Carlsbad, CA

COUNTED BY: JG
REDUCED BY: JR
DATE: 1/15/2006

DATE OF COUNT: 1/4/06
TIME OF COUNT: PM Peak
WEATHER: Clear

EXHIBIT 3

36-A EX

SHORT REPORT

General Information		Site Information	
Analyst	USAI	Intersection	ECR/LEUCADIA BLVD.
Agency or Co.	USAI	Area Type	All other areas
Date Performed	09/08/08	Jurisdiction	CARLSBAD
Time Period	AM PEAK HOUR	Analysis Year	EXISTING

Volume and Timing Input

	EB			WB			NB			SB		
	LT	TH	RT	LT	TH	RT	LT	TH	RT	LT	TH	RT
Num. of Lanes	2	3	1	2	3	0	2	3	1	2	4	0
Lane group	L	T	R	L	TR		L	T	R	L	TR	
Volume (vph)	126	519	203	1076	1046	83	94	411	868	122	1490	136
% Heavy veh	2	2	2	2	2	2	2	2	2	2	2	2
PHF	0.95	0.95	0.95	0.95	0.95	0.95	0.95	0.95	0.95	0.95	0.95	0.95
Actuated (P/A)	A	A	A	A	A	A	A	A	A	A	A	A
Startup lost time	2.0	2.0	2.0	2.0	2.0		2.0	2.0	2.0	2.0	2.0	
Ext. eff. green	2.0	2.0	2.0	2.0	2.0		2.0	2.0	2.0	2.0	2.0	
Arrival type	5	5	5	5	5		5	5	5	5	5	
Unit Extension	3.0	3.0	3.0	3.0	3.0		3.0	3.0	3.0	3.0	3.0	
Ped/Bike/RTOR Volume	0	0	0	0	0	0	0		325	0		0
Lane Width	12.0	12.0	12.0	12.0	12.0		12.0	12.0	12.0	12.0	12.0	
Parking/Grade/Parking	N	0	N	N	0	N	N	0	N	N	0	N
Parking/hr												
Bus stops/hr	0	0	0	0	0		0	0	0	0	0	
Unit Extension	3.0	3.0	3.0	3.0	3.0		3.0	3.0	3.0	3.0	3.0	

Phasing	Excl. Left	WB Only	Thru & RT	04	Excl. Left	Thru & RT	07	08
Timing	G = 7.0	G = 28.0	G = 20.0	G = 0.0	G = 6.0	G = 34.0	G = 0.0	G = 0.0
	Y = 5	Y = 5	Y = 5	Y =	Y = 5	Y = 5	Y = 0	Y =

Duration of Analysis (hrs) = 0.25 Cycle Length C = 120.0

Lane Group Capacity, Control Delay, and LOS Determination

	EB			WB			NB			SB		
Adj. flow rate	133	546	214	1133	1188		99	433	572	128	1711	
Lane group cap.	190	890	387	1085	2333		163	1513	575	163	1992	
v/c ratio	0.70	0.61	0.55	1.04	0.51		0.61	0.29	0.99	0.79	0.86	
Green ratio	0.06	0.17	0.26	0.33	0.44		0.05	0.28	0.38	0.05	0.28	
Unif. delay d1	55.5	46.4	38.5	40.0	24.1		55.8	33.5	36.9	56.4	40.7	
Delay factor k	0.27	0.20	0.15	0.50	0.12		0.19	0.11	0.50	0.33	0.39	
Increm. delay d2	10.9	1.3	1.7	39.6	0.2		6.4	0.1	36.1	21.9	4.0	
PF factor	0.959	0.867	0.768	0.667	0.473		0.965	0.736	0.586	0.965	0.736	
Control delay	64.1	41.5	31.3	66.3	11.6		60.3	24.8	57.7	76.3	34.0	
Lane group LOS	E	D	C	E	B		E	C	E	E	C	
Apprch. delay	42.4			38.3			45.0			37.0		
Approach LOS	D			D			D			D		
Intersec. delay	39.7			Intersection LOS						D		

HCS2000™ Copyright © 2000 University of Florida, All Rights Reserved Version 4.1f

HCS2000: Signalized Intersections Release 4.1f

36-A
EX

Urban Systems Inc.
4540 Kearny Villa Rd.
San Diego Ca 92123

Phone: 858-560-4911 Fax:
E-Mail:

OPERATIONAL ANALYSIS

Analyst: USAI
Agency/Co.: USAI
Date Performed: 09/08/08
Analysis Time Period: AM PEAK HOUR
Intersection: ECR/LEUCADIA BLVD.
Area Type: All other areas
Jurisdiction: CARLSBAD
Analysis Year: EXISTING
Project ID: LA COSTA TOWN SQUARE
E/W St: LEUCADIA BLVD. N/S St: ECR

VOLUME DATA

	Eastbound			Westbound			Northbound			Southbound		
	L	T	R	L	T	R	L	T	R	L	T	R
Volume	126	519	203	1076	1046	83	94	411	868	122	1490	136
% Heavy Veh	2	2	2	2	2	2	2	2	2	2	2	2
PHF	0.95	0.95	0.95	0.95	0.95	0.95	0.95	0.95	0.95	0.95	0.95	0.95
PK 15 Vol	33	137	53	283	275	22	25	108	228	32	392	36
Hi Ln Vol												
% Grade		0			0			0			0	
Ideal Sat	1800	2000	1800	1800	2000		1800	2000	1800	1800	2000	
ParkExist												
NumPark												
No. Lanes	2	3	1	2	3	0	2	3	1	2	4	0
LGConfig	L	T	R	L	TR		L	T	R	L	TR	
Lane Width	12.0	12.0	12.0	12.0	12.0		12.0	12.0	12.0	12.0	12.0	
RTOR Vol			0			0			325			0
Adj Flow	133	546	214	1133	1188		99	433	572	128	1711	
%InSharedLn												
Prop LTs		0.000			0.000			0.000			0.000	
Prop RTs		0.000	1.000		0.073			0.000	1.000		0.084	
Peds Bikes	0		0	0		0	0			0		
Buses	0	0	0	0	0		0	0	0	0	0	
%InProtPhase			0.0			0.0						

Duration 0.25 Area Type: All other areas

OPERATING PARAMETERS

	Eastbound			Westbound			Northbound			Southbound		
	L	T	R	L	T	R	L	T	R	L	T	R
Init Unmet	0.0	0.0	0.0	0.0	0.0		0.0	0.0	0.0	0.0	0.0	
Arriv. Type	5	5	5	5	5		5	5	5	5	5	
Unit Ext.	3.0	3.0	3.0	3.0	3.0		3.0	3.0	3.0	3.0	3.0	
I Factor		1.000			1.000			1.000			1.000	
Lost Time	2.0	2.0	2.0	2.0	2.0		2.0	2.0	2.0	2.0	2.0	
Ext of g	2.0	2.0	2.0	2.0	2.0		2.0	2.0	2.0	2.0	2.0	
Ped Min g		38.2			38.2			33.2			33.2	

PRIORITY ENGINEERING, INC.

INTERSECTION TURNING MOVEMENTS REDUCTION SHEET

ATION: Leucadia Blvd and El Camino Real
Carlsbad, CA

DATE OF COUNT: Wed. 1/18/06
TIME OF COUNT: AM Peak

COUNTED BY: TB/BW
WEATHER: Clear

TIME INTERVAL ENDING AT	FROM NORTH ON (SB) El Camino Real				FROM SOUTH ON (NB) El Camino Real				FROM EAST ON (WB) Olivenhain Rd				FROM WEST ON (EB) Leucadia Blvd				INTERVAL TOTALS
	Right	Thru	Left	Peds	Right	Thru	Left	Peds	Right	Thru	Left	Peds	Right	Thru	Left	Peds	
07:15 AM	33	310	27	0	294	76	13	0	18	229	238	0	41	116	16	0	1411
07:30 AM	30	363	19	0	295	83	45	0	15	265	280	0	35	155	24	0	1609
07:45 AM	36	401	20	0	148	138	17	0	27	294	278	0	76	128	48	0	1611
08:00 AM	37	416	56	0	131	114	19	0	23	258	280	0	51	120	38	0	1543
08:15 AM	33	364	43	0	112	124	31	0	34	231	256	0	58	88	18	0	1392
08:30 AM	24	393	37	0	131	143	42	0	34	247	208	0	67	122	31	0	1479
08:45 AM	15	343	35	0	98	165	30	0	23	208	211	0	54	108	31	0	1321
09:00 AM	19	298	31	0	101	163	33	0	22	152	167	0	72	93	21	0	1192
PEAK HOUR TOTALS	136	1490	122	0	868	411	94	0	83	1046	1076	0	203	519	126	0	INTERSECTION
ALL MOVEMENTS	1748				1373				2205				848				6174
PEAK HOUR FACTOR	0.86				0.81				0.92				0.84				0.96

S = Pedestrians Across Intersection Log
= Peak Hour Factor

AM PEAK HOUR: 7:00 AM TO 8:00 AM

UCED BY: JR

DATE OF REDUCTION: 1/19/2006

PRIORITY ENGINEERING, INC.

INTERSECTION TURNING MOVEMENTS REDUCTION SHEET

TURNING MOVEMENTS DIAGRAM

AM PEAK HOUR ENDING AT 8:00 AM

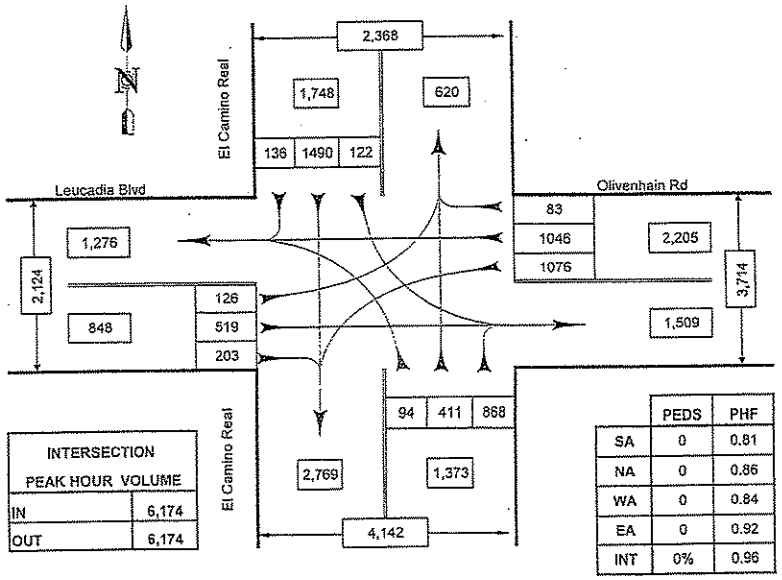

INTERSECTION PEAK HOUR VOLUME	
IN	6,174
OUT	6,174

	PEDS	PHF
SA	0	0.81
NA	0	0.86
WA	0	0.84
EA	0	0.92
INT	0%	0.96

PEDS = Pedestrians
PHF = Peak Hour Factor

Leucadia Blvd and El Camino Real

Carisbad, CA

COUNTED BY: TB/BW
REDUCED BY: JR
DATE: 1/19/2006

DATE OF COUNT: 1/18/06
TIME OF COUNT: AM Peak
WEATHER: Clear

36-A
Ex

36-P Ex

SHORT REPORT

General Information		Site Information	
Analyst	USAI	Intersection	ECR/LEUCADIA BLVD.
Agency or Co.	USAI	Area Type	All other areas
Date Performed	09/08/08	Jurisdiction	ENCINITAS
Time Period	PM PEAK HOUR	Analysis Year	EXISTING

Volume and Timing Input

	EB			WB			NB			SB		
	LT	TH	RT	LT	TH	RT	LT	TH	RT	LT	TH	RT
Num. of Lanes	2	3	1	2	3	0	2	3	1	2	4	0
Lane group	L	T	R	L	TR		L	T	R	L	TR	
Volume (vph)	243	763	266	673	594	124	296	1452	1250	140	980	55
% Heavy veh	2	2	2	2	2	2	2	2	2	2	2	2
PHF	0.95	0.95	0.95	0.95	0.95	0.95	0.95	0.95	0.95	0.95	0.95	0.95
Actuated (P/A)	A	A	A	A	A	A	A	A	A	A	A	A
Startup lost time	2.0	2.0	2.0	2.0	2.0		2.0	2.0	2.0	2.0	2.0	
Ext. eff. green	2.0	2.0	2.0	2.0	2.0		2.0	2.0	2.0	2.0	2.0	
Arrival type	5	5	5	5	5		5	5	5	5	5	
Unit Extension	3.0	3.0	3.0	3.0	3.0		3.0	3.0	3.0	3.0	3.0	
Ped/Bike/RTOR Volume	0	0	0	0	0	0	0	0	355	0	0	0
Lane Width	12.0	12.0	12.0	12.0	12.0		12.0	12.0	12.0	12.0	12.0	
Parking/Grade/Parking	N	0	N	N	0	N	N	0	N	N	0	N
Parking/hr												
Bus stops/hr	0	0	0	0	0		0	0	0	0	0	
Unit Extension	3.0	3.0	3.0	3.0	3.0		3.0	3.0	3.0	3.0	3.0	

Phasing	Excl. Left	Thru & RT	03	04	Excl. Left	Thru & RT	07	08
Timing	G = 30.5	G = 23.5	G = 0.0	G =	G = 15.0	G = 44.0	G = 0.0	G = 0.0
	Y = 5	Y = 5	Y =	Y =	Y = 5	Y = 5	Y = 0	Y =

Duration of Analysis (hrs) = 0.25 | Cycle Length C = 133.0

Lane Group Capacity, Control Delay, and LOS Determination

	EB			WB			NB			SB		
Adj. flow rate	256	803	280	708	756		312	1528	942	147	1090	
Lane group cap.	747	944	491	747	919		367	1767	897	367	2337	
v/c ratio	0.34	0.85	0.57	0.95	0.82		0.85	0.86	1.05	0.40	0.47	
Green ratio	0.23	0.18	0.33	0.23	0.18		0.11	0.33	0.60	0.11	0.33	
Unif. delay d1	42.9	53.0	37.0	50.5	52.7		57.9	41.7	26.8	54.8	35.2	
Delay factor k	0.11	0.38	0.16	0.46	0.36		0.38	0.39	0.50	0.11	0.11	
Increm. delay d2	0.3	7.5	1.6	21.1	6.1		17.0	4.8	44.1	0.7	0.1	
PF factor	0.802	0.857	0.676	0.802	0.857		0.915	0.670	0.238	0.915	0.670	
Control delay	34.6	53.0	26.6	61.6	51.3		70.0	32.7	50.5	50.9	23.8	
Lane group LOS	C	D	C	E	D		E	C	D	D	C	
Apprch. delay	43.9			56.3			42.9			27.0		
Approach LOS	D			E			D			C		
Intersec. delay	43.1			Intersection LOS						D		

Copyright © 2000 University of Florida, All Rights Reserved

HCS2000: Signalized Intersections Release 4.1f

Urban Systems Inc.
4540 Kearny Villa Rd.
San Diego Ca 92123

Phone: 858-560-4911 Fax:
E-Mail:

36-P
EX

OPERATIONAL ANALYSIS

Analyst: USAI
Agency/Co.: USAI
Date Performed: 09/08/08
Analysis Time Period: PM PEAK HOUR
Intersection: ECR/LEUCADIA BLVD.
Area Type: All other areas
Jurisdiction: ENCINITAS
Analysis Year: EXISTING
Project ID: LA COSTA TOWN SQUARE
E/W St: LEUCADIA BLVD. N/S St: ECR

VOLUME DATA

	Eastbound			Westbound			Northbound			Southbound		
	L	T	R	L	T	R	L	T	R	L	T	R
Volume	243	763	266	673	594	124	296	1452	1250	140	980	55
% Heavy Veh	2	2	2	2	2	2	2	2	2	2	2	2
PHF	0.95	0.95	0.95	0.95	0.95	0.95	0.95	0.95	0.95	0.95	0.95	0.95
PK 15 Vol	64	201	70	177	156	33	78	382	329	37	258	14
Hi Ln Vol												
% Grade		0			0			0			0	
Ideal Sat	1800	2000	1800	1800	2000		1800	2000	1800	1800	2000	
ParkExist												
NumPark												
No. Lanes	2	3	1	2	3	0	2	3	1	2	4	0
LGConfig	L	T	R	L	TR		L	T	R	L	TR	
Lane Width	12.0	12.0	12.0	12.0	12.0		12.0	12.0	12.0	12.0	12.0	
RTOR Vol			0			0			355			0
Adj Flow	256	803	280	708	756		312	1528	942	147	1090	
%InSharedLn												
Prop LTs		0.000			0.000			0.000			0.000	
Prop RTs		0.000	1.000		0.173			0.000	1.000		0.053	
Peds Bikes	0		0	0		0	0		0	0		0
Buses	0	0	0	0	0		0	0	0	0	0	
%InProtPhase			0.0						0.0			

Duration 0.25 Area Type: All other areas

OPERATING PARAMETERS

	Eastbound			Westbound			Northbound			Southbound		
	L	T	R	L	T	R	L	T	R	L	T	R
Init Unmet	0.0	0.0	0.0	0.0	0.0		0.0	0.0	0.0	0.0	0.0	
Arriv. Type	5	5	5	5	5		5	5	5	5	5	
Unit Ext.	3.0	3.0	3.0	3.0	3.0		3.0	3.0	3.0	3.0	3.0	
I Factor		1.000			1.000			1.000			1.000	
Lost Time	2.0	2.0	2.0	2.0	2.0		2.0	2.0	2.0	2.0	2.0	
Ext of g	2.0	2.0	2.0	2.0	2.0		2.0	2.0	2.0	2.0	2.0	
Ped Min g		3.2			3.2			3.2			3.2	

PRIORITY ENGINEERING, INC.

INTERSECTION TURNING MOVEMENTS REDUCTION SHEET

ION: Leaucadia Blvd and El Camino Real
Carlsbad, CA

DATE OF COUNT: Wed. 1/18/06
TIME OF COUNT: PM Peak

COUNTED BY: TB/BW
WEATHER: Clear

TIME INTERVAL ENDING AT	FROM NORTH ON (SB) El Camino Real				FROM SOUTH ON (NB) El Camino Real				FROM EAST ON (WB) Olivenhain Rd				FROM WEST ON (EB) Leucadia Blvd				INTERVAL TOTALS
	Right	Thru	Left	Peds	Right	Thru	Left	Peds	Right	Thru	Left	Peds	Right	Thru	Left	Peds	
04:15 PM	61	183	63	0	324	244	81	0	30	189	186	0	79	184	73	0	1697
04:30 PM	23	229	37	0	328	390	84	0	31	170	158	0	110	198	64	0	1822
04:45 PM	10	262	29	0	313	338	77	0	32	136	165	0	63	159	35	0	1619
05:00 PM	2	221	47	0	278	303	54	0	33	127	160	0	52	205	67	0	1549
05:15 PM	21	268	27	0	331	421	81	0	28	161	190	0	41	201	77	0	1847
05:30 PM	20	234	25	0	314	449	63	0	24	137	135	0	29	141	44	0	1615
05:45 PM	10	295	46	0	308	325	62	0	23	185	159	0	27	178	56	0	1674
06:00 PM	6	260	31	0	315	363	80	0	18	155	166	0	34	158	56	0	1642
PEAK HOUR TOTALS	56	980	140	0	1250	1452	296	0	124	594	673	0	266	763	243	0	INTERSECTION
ALL MOVEMENTS	1176				2998				1391				1272				6837
PEAK HOUR FACTOR	0.93				0.90				0.92				0.85				0.93

= Pedestrians Across Intersection Leg
Peak Hour Factor

PM PEAK HOUR: 4:15 PM TO 5:15 PM

CED BY: JR

DATE OF REDUCTION: 1/19/2006

PRIORITY ENGINEERING, INC.

INTERSECTION TURNING MOVEMENTS REDUCTION SHEET

TURNING MOVEMENTS DIAGRAM

PM PEAK HOUR ENDING AT 5:15 PM

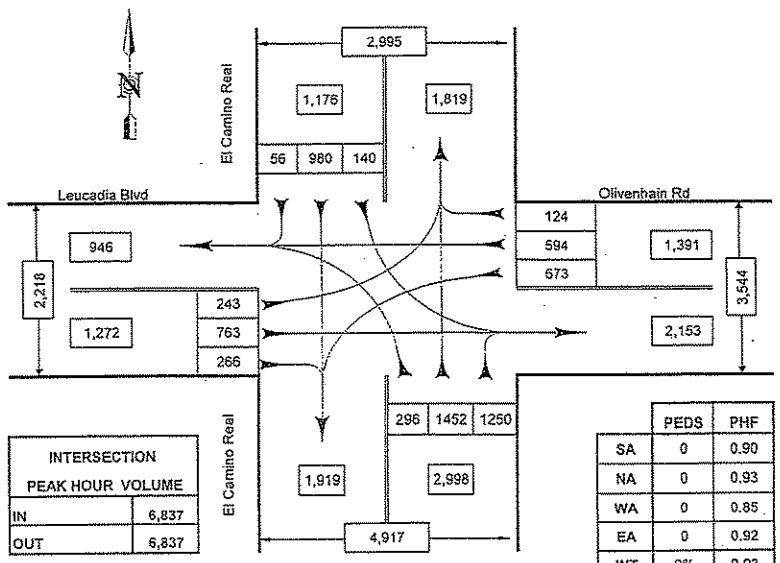

INTERSECTION PEAK HOUR VOLUME	
IN	6,837
OUT	6,837

	PEDS	PHF
SA	0	0.90
NA	0	0.93
WA	0	0.85
EA	0	0.92
INT	0%	0.93

PEDS = Pedestrians
PHF = Peak Hour Factor

Leaucadia Blvd and El Camino Real

Carlsbad, CA

COUNTED BY: TB/BW
REDUCED BY: JR
DATE: 1/19/2006

DATE OF COUNT: 1/18/06
TIME OF COUNT: PM Peak
WEATHER: Clear

36-8
EX

37-A EX

SHORT REPORT

General Information		Site Information	
Analyst	USAI	Intersection	OLIVENHAIN RD./AMARGOSA DR.
Agency or Co.	USAI	Area Type	All other areas
Date Performed	09/08/08	Jurisdiction	ENCINITAS
Time Period	AM PEAK HOUR	Analysis Year	EXISTING

Volume and Timing Input

	EB			WB			NB			SB		
	LT	TH	RT	LT	TH	RT	LT	TH	RT	LT	TH	RT
Num. of Lanes	1	2	0	1	2	0	0	1	0	0	1	0
Lane group	L	TR		L	TR			LTR			LTR	
Volume (vph)	53	1032	31	68	1985	12	132	1	41	11	9	184
% Heavy veh	0	2	0	0	2	2	2	2	2	0	0	0
PHF	0.95	0.95	0.95	0.95	0.95	0.95	0.95	0.95	0.95	0.95	0.95	0.95
Actuated (P/A)	A	A	A	A	A	A	A	A	A	A	A	A
Startup lost time	2.0	2.0		2.0	2.0			2.0			2.0	
Ext. eff. green	2.0	2.0		2.0	2.0			2.0			2.0	
Arrival type	5	5		5	5			5			5	
Unit Extension	3.0	3.0		3.0	3.0			3.0			3.0	
Ped/Bike/RTOR Volume	0	0	0	0	0	0	0	0	25	0	0	50
Lane Width	12.0	12.0		12.0	12.0			12.0			12.0	
Parking/Grade/Parking	N	0	N	N	0	N	N	0	N	N	0	N
Parking/hr												
Bus stops/hr	0	0		0	0			0			0	
Unit Extension	3.0	3.0		3.0	3.0			3.0			3.0	

Phasing	Excl. Left	Thru & RT	03	04	NS Perm	06	07	08
Timing	G = 10.0	G = 60.0	G =	G =	G = 25.0	G =	G =	G =
	Y = 5	Y = 5	Y =	Y =	Y = 5	Y =	Y =	Y =

Duration of Analysis (hrs) = 0.25 Cycle Length C = 110.0

Lane Group Capacity, Control Delay, and LOS Determination

	EB			WB			NB			SB		
Adj. flow rate	56	1119		72	2102			157			162	
Lane group cap.	155	2029		155	2035			238			352	
v/c ratio	0.36	0.55		0.46	1.03			0.66			0.46	
Green ratio	0.09	0.55		0.09	0.55			0.23			0.23	
Unif. delay d1	47.0	16.3		47.5	25.0			38.6			36.7	
Delay factor k	0.11	0.15		0.11	0.50			0.23			0.11	
Increm. delay d2	1.4	0.3		2.2	29.0			6.6			1.0	
PF factor	0.933	0.200		0.933	0.200			0.804			0.804	
Control delay	45.3	3.6		46.5	34.0			37.7			30.4	
Lane group LOS	D	A		D	C			D			C	
Apprch. delay	5.6			34.4			37.7			30.4		
Approach LOS	A			C			D			C		
Intersec. delay	25.1			Intersection LOS						C		

HCS2000™ Copyright © 2000 University of Florida, All Rights Reserved Version 4.1f

37-A
EXIST.

PRIORITY ENGINEERING, INC.

INTERSECTION TURNING MOVEMENTS REDUCTION SHEET

TURNING MOVEMENTS DIAGRAM

AM PEAK HOUR ENDING AT 8:15 AM

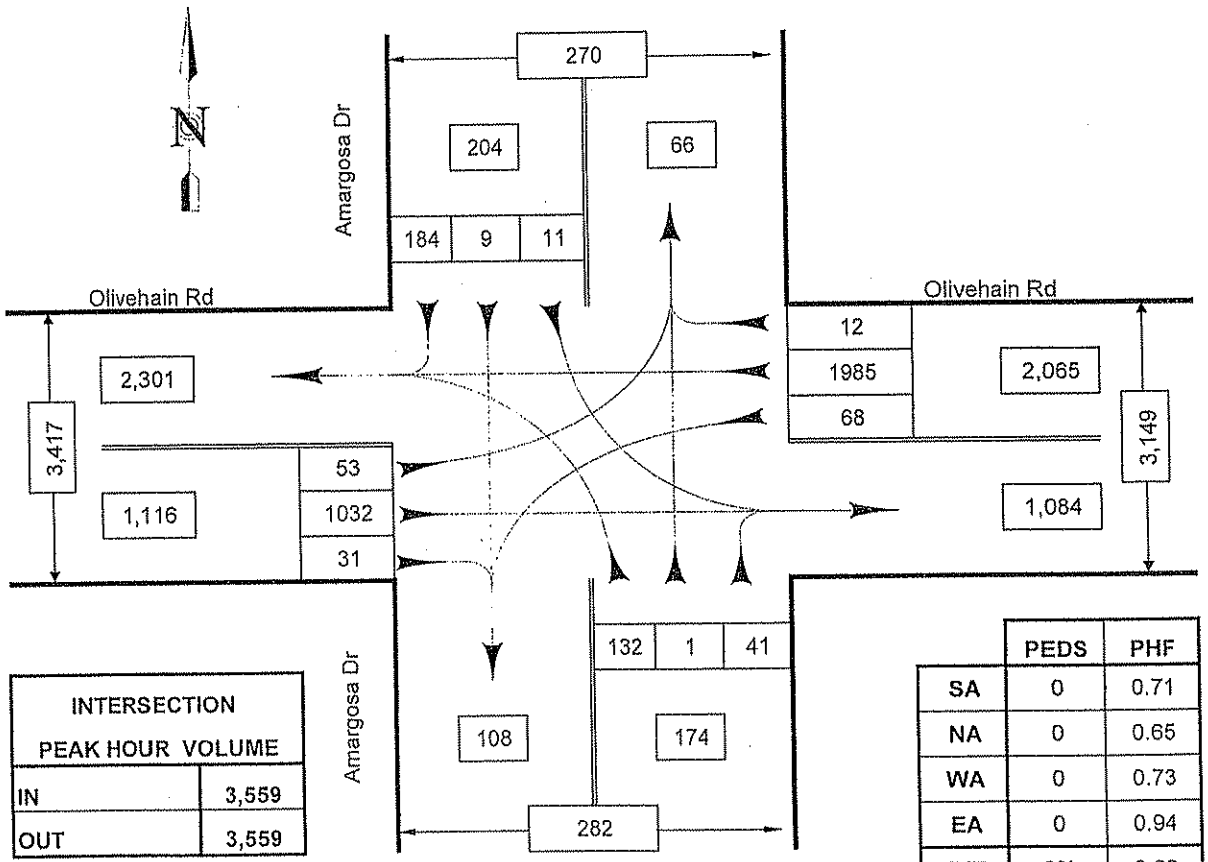

INTERSECTION PEAK HOUR VOLUME	
IN	3,559
OUT	3,559

	PEDS	PHF
SA	0	0.71
NA	0	0.65
WA	0	0.73
EA	0	0.94
INT	0%	0.92

PEDS = Pedestrians
PHF = Peak Hour Factor

Amargosa Dr and Olivenhain Rd

Carlsbad, CA

COUNTED BY: KH

REDUCED BY: JR

DATE: 1/10/2006

DATE OF COUNT: 1/10/06

TIME OF COUNT: AM Peak

WEATHER: Clear

37-P EX

SHORT REPORT

General Information		Site Information	
Analyst	USAI	Intersection	OLIVENHAIN RD./AMARGOSA DR.
Agency or Co.	USAI	Area Type	All other areas
Date Performed	09/09/08	Jurisdiction	CARLSBAD
Time Period	PM PEAK HOUR	Analysis Year	EXISTING

Volume and Timing Input

	EB			WB			NB			SB		
	LT	TH	RT	LT	TH	RT	LT	TH	RT	LT	TH	RT
Num. of Lanes	1	2	0	1	2	0	0	1	0	0	1	0
Lane group	L	TR		L	TR			LTR			LTR	
Volume (vph)	126	1742	108	65	1189	17	61	5	36	10	6	59
% Heavy veh	0	2	0	0	2	2	2	2	2	0	0	0
PHF	0.95	0.95	0.95	0.95	0.95	0.95	0.95	0.95	0.95	0.95	0.95	0.95
Actuated (P/A)	A	A	A	A	A	A	A	A	A	A	A	A
Startup lost time	2.0	2.0		2.0	2.0			2.0			2.0	
Ext. eff. green	2.0	2.0		2.0	2.0			2.0			2.0	
Arrival type	5	5		5	5			5			5	
Unit Extension	3.0	3.0		3.0	3.0			3.0			3.0	
Ped/Bike/RTOR Volume	0	0	50	0	0	0	0	0	20	0	0	50
Lane Width	12.0	12.0		12.0	12.0			12.0			12.0	
Parking/Grade/Parking	N	0	N	N	0	N	N	0	N	N	0	N
Parking/hr												
Bus stops/hr	0	0		0	0			0			0	
Unit Extension	3.0	3.0		3.0	3.0			3.0			3.0	

Phasing	Excl. Left	Thru & RT	03	04	NS Perm	06	07	08
Timing	G = 13.0	G = 52.0	G =	G =	G = 20.0	G =	G =	G =
	Y = 5	Y = 5	Y =	Y =	Y = 5	Y =	Y =	Y =

Duration of Analysis (hrs) = 0.25 Cycle Length C = 100.0

Lane Group Capacity, Control Delay, and LOS Determination

	EB			WB			NB			SB		
Adj. flow rate	133	1895		68	1270			86			26	
Lane group cap.	222	1933		222	1937			266			308	
v/c ratio	0.60	0.98		0.31	0.66			0.32			0.08	
Green ratio	0.13	0.52		0.13	0.52			0.20			0.20	
Unif. delay d1	41.0	23.5		39.4	17.5			34.2			32.5	
Delay factor k	0.19	0.48		0.11	0.23			0.11			0.11	
Increm. delay d2	4.4	16.0		0.8	0.8			0.7			0.1	
PF factor	0.900	0.278		0.900	0.278			0.833			0.833	
Control delay	41.4	22.5		36.3	5.7			29.2			27.2	
Lane group LOS	D	C		D	A			C			C	
Apprch. delay	23.8			7.2			29.2			27.2		
Approach LOS	C			A			C			C		
Intersec. delay	17.6			Intersection LOS						B		

HCS2000™ Copyright © 2000 University of Florida, All Rights Reserved Version 4.1f

37-P
EXIST.

PRIORITY ENGINEERING, INC.

INTERSECTION TURNING MOVEMENTS REDUCTION SHEET

TURNING MOVEMENTS DIAGRAM

PM PEAK HOUR ENDING AT 5:45 PM

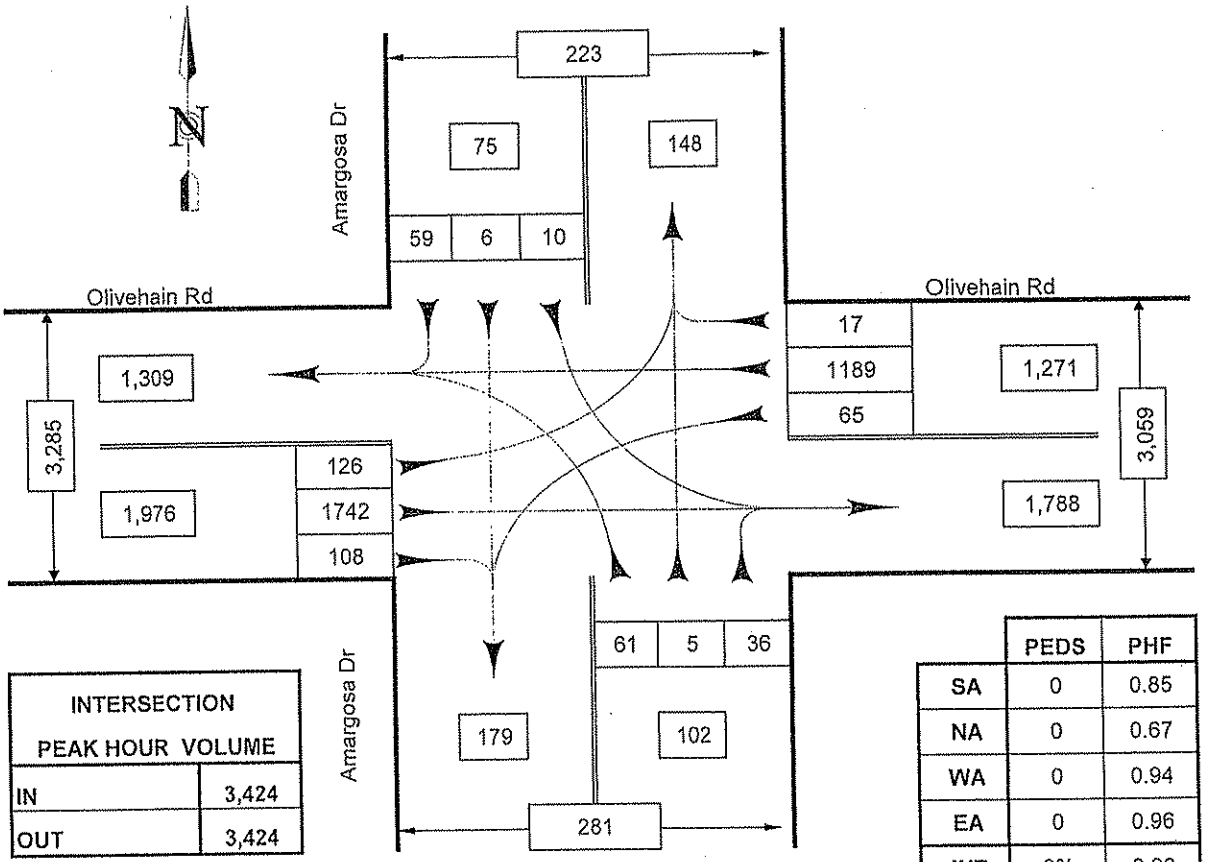

INTERSECTION PEAK HOUR VOLUME	
IN	3,424
OUT	3,424

	PEDS	PHF
SA	0	0.85
NA	0	0.67
WA	0	0.94
EA	0	0.96
INT	0%	0.96

PEDS = Pedestrians
PHF = Peak Hour Factor

Amargosa Dr and Olivehain Rd

Carlsbad, CA

COUNTED BY: KH

REDUCED BY: JR

DATE: 1/10/2006

DATE OF COUNT: 1/10/06

TIME OF COUNT: PM Peak

WEATHER: Clear

40-A EX

SHORT REPORT

General Information		Site Information	
Analyst	USAI	Intersection	MELROSE DR./SAN ELIJO RD.
Agency or Co.	USAI	Area Type	All other areas
Date Performed	09/09/08	Jurisdiction	SAN MARCOS
Time Period	AM PEAK HOUR	Analysis Year	EXISTING

Volume and Timing Input

	EB			WB			NB			SB		
	LT	TH	RT	LT	TH	RT	LT	TH	RT	LT	TH	RT
Num. of Lanes	1	2	1	1	2	1	1	1	0	1	1	1
Lane group	L	T	R	L	T	R	L	TR		L	LT	R
Volume (vph)	67	230	70	57	732	681	75	44	23	301	35	8
% Heavy veh	0	2	0	0	2	2	2	2	2	0	0	0
PHF	0.95	0.95	0.95	0.95	0.95	0.95	0.95	0.95	0.95	0.95	0.95	0.95
Actuated (P/A)	A	A	A	A	A	A	A	A	A	A	A	A
Startup lost time	2.0	2.0	2.0	2.0	2.0	2.0	2.0	2.0		2.0	2.0	2.0
Ext. eff. green	2.0	2.0	2.0	2.0	2.0	2.0	2.0	2.0		2.0	2.0	2.0
Arrival type	5	5	5	5	5	5	5	5		5	5	5
Unit Extension	3.0	3.0	3.0	3.0	3.0	3.0	3.0	3.0		3.0	3.0	3.0
Ped/Bike/RTOR Volume	0	0	0	0	0	0	0	0	0	0	0	0
Lane Width	12.0	12.0	12.0	12.0	12.0	12.0	12.0	12.0		12.0	12.0	12.0
Parking/Grade/Parking	N	0	N	N	0	N	N	0	N	N	0	N
Parking/hr												
Bus stops/hr	0	0	0	0	0	0	0	0		0	0	0
Unit Extension	3.0	3.0	3.0	3.0	3.0	3.0	3.0	3.0		3.0	3.0	3.0

Phasing	Excl. Left	Thru & RT	03	04	SB Only	NB Only	07	08
Timing	G = 11.0	G = 53.0	G =	G =	G = 18.0	G = 10.0	G =	G =
	Y = 5	Y = 5	Y =	Y =	Y = 4	Y = 4	Y =	Y =
Duration of Analysis (hrs) = 0.25						Cycle Length C = 110.0		

Lane Group Capacity, Control Delay, and LOS Determination

	EB			WB			NB			SB		
Adj. flow rate	71	242	74	60	771	717	79	70		190	164	8
Lane group cap.	171	1799	737	171	1799	723	152	169		280	315	250
v/c ratio	0.42	0.13	0.10	0.35	0.43	0.99	0.52	0.41		0.68	0.52	0.03
Green ratio	0.10	0.48	0.48	0.10	0.48	0.48	0.09	0.09		0.16	0.16	0.16
Unif. delay d1	46.5	15.8	15.5	46.2	18.6	28.3	47.7	47.2		43.3	42.1	38.7
Delay factor k	0.11	0.11	0.11	0.11	0.11	0.49	0.13	0.11		0.25	0.13	0.11
Increm. delay d2	1.6	0.0	0.1	1.2	0.2	31.3	3.2	1.6		6.5	1.6	0.1
PF factor	0.926	0.380	0.380	0.926	0.380	0.380	0.933	0.933		0.870	0.870	0.870
Control delay	44.7	6.0	6.0	44.0	7.2	42.1	47.7	45.7		44.1	38.1	33.7
Lane group LOS	D	A	A	D	A	D	D	D		D	D	C
Apprch. delay	13.1			24.8			46.8			41.2		
Approach LOS	B			C			D			D		
Intersec. delay	26.7			Intersection LOS						C		

HCS2000™ Copyright © 2000 University of Florida, All Rights Reserved Version 4.1f

PRIORITY ENGINEERING, INC.

INTERSECTION TURNING MOVEMENTS REDUCTION SHEET

TION: Melrose Dr/Dove Tail Rd and San Elijo Rd
Carlsbad, CA

DATE OF COUNT: Wed. 1/18/06
TIME OF COUNT: AM Peak

COUNTED BY: JR
WEATHER: Clear

TIME INTERVAL ENDING AT	FROM NORTH ON (SB) Melrose Dr				FROM SOUTH ON (NB) Dove Tail Rd				FROM EAST ON (WB) San Elijo Rd				FROM WEST ON (EB) San Elijo Rd				INTERVAL TOTALS
	Right	Thru	Left	Peds	Right	Thru	Left	Peds	Right	Thru	Left	Peds	Right	Thru	Left	Peds	
07:15 AM	3	13	80	0	2	13	24	0	145	184	16	0	22	55	9	0	566
07:30 AM	1	7	118	0	9	5	19	0	194	180	9	0	19	56	8	0	625
07:45 AM	2	5	55	0	6	14	21	0	190	205	15	0	9	64	27	0	613
08:00 AM	2	10	48	0	5	12	11	0	152	163	17	0	20	55	23	0	519
08:15 AM	3	4	63	0	5	13	21	0	140	164	12	0	13	41	21	0	500
08:30 AM	4	5	47	0	2	12	25	0	116	138	3	0	6	55	21	0	434
08:45 AM	2	6	45	0	1	9	23	0	135	133	6	0	14	59	14	0	444
09:00 AM	2	6	35	0	2	6	18	0	77	114	4	0	12	61	14	0	351
PEAK HOUR TOTALS	8	35	301	0	23	44	75	0	681	732	57	0	70	230	67	0	INTERSECTION
ALL MOVEMENTS	344				142				1470				367				2323
PEAK HOUR FACTOR	0.68				0.87				0.90				0.92				0.93

: = Pedestrians Across Intersection Leg
= Peak Hour Factor

AM PEAK HOUR: 7:00 AM TO 8:00 AM

JCED BY: JR

DATE OF REDUCTION: 1/19/2006

PRIORITY ENGINEERING, INC.

INTERSECTION TURNING MOVEMENTS REDUCTION SHEET

TURNING MOVEMENTS DIAGRAM

AM PEAK HOUR ENDING AT 8:00 AM

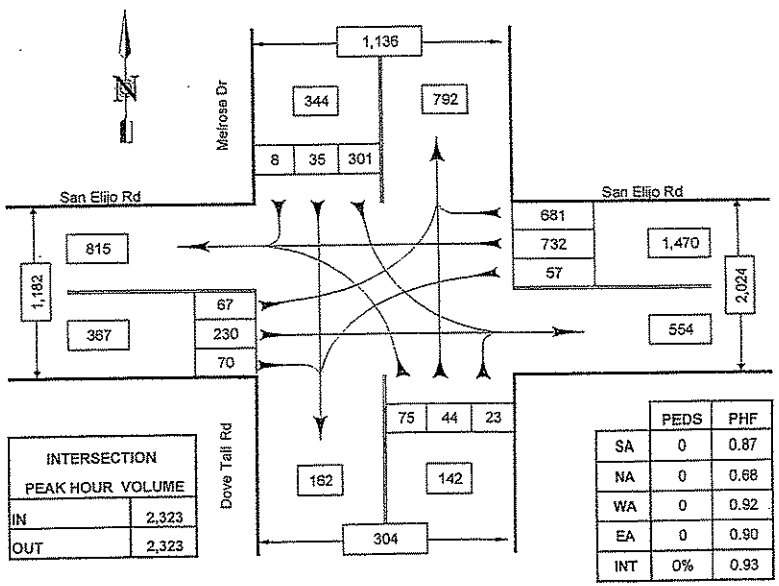

INTERSECTION PEAK HOUR VOLUME	
IN	2,323
OUT	2,323

	PEDS	PHF
SA	0	0.87
NA	0	0.68
WA	0	0.92
EA	0	0.90
INT	0%	0.93

PEDS = Pedestrians
PHF = Peak Hour Factor

Melrose Dr/Dove Tail Rd and San Elijo Rd

Carlsbad, CA

COUNTED BY: JR
REDUCED BY: JR
DATE: 1/19/2006

DATE OF COUNT: 1/18/06
TIME OF COUNT: AM Peak
WEATHER: Clear

Ao: A
Ex

4D-P EX

SHORT REPORT

General Information		Site Information	
Analyst	USAI	Intersection	MELROSE DR./SAN ELIJO RD.
Agency or Co.	USAI	Area Type	All other areas
Date Performed	09/09/08	Jurisdiction	SAN MARCOS
Time Period	PM PEAK HOUR	Analysis Year	EXISTING PM

Volume and Timing Input

	EB			WB			NB			SB		
	LT	TH	RT	LT	TH	RT	LT	TH	RT	LT	TH	RT
Num. of Lanes	1	2	1	1	2	1	1	1	0	1	1	1
Lane group	L	T	R	L	T	R	L	TR		L	LT	R
Volume (vph)	61	646	55	13	258	211	45	45	36	461	54	56
% Heavy veh	0	2	0	0	2	2	2	2	2	0	0	0
PHF	0.95	0.95	0.95	0.95	0.95	0.95	0.95	0.95	0.95	0.95	0.95	0.95
Actuated (P/A)	A	A	A	A	A	A	A	A	A	A	A	A
Startup lost time	2.0	2.0	2.0	2.0	2.0	2.0	2.0	2.0		2.0	2.0	2.0
Ext. eff. green	2.0	2.0	2.0	2.0	2.0	2.0	2.0	2.0		2.0	2.0	2.0
Arrival type	5	5	5	5	5	5	4	4		4	4	4
Unit Extension	3.0	3.0	3.0	3.0	3.0	3.0	3.0	3.0		3.0	3.0	3.0
Ped/Bike/RTOR Volume	0	0	0	0	0	0	0	0	0	0	0	10
Lane Width	12.0	12.0	12.0	12.0	12.0	12.0	12.0	12.0		12.0	12.0	12.0
Parking/Grade/Parking	N	0	N	N	0	N	N	0	N	N	0	N
Parking/hr												
Bus stops/hr	0	0	0	0	0	0	0	0		0	0	0
Unit Extension	3.0	3.0	3.0	3.0	3.0	3.0	3.0	3.0		3.0	3.0	3.0

Phasing	Excl. Left	Thru & RT	03	04	SB Only	NB Only	07	08
Timing	G = 15.0	G = 32.0	G =	G =	G = 20.0	G = 10.0	G =	G =
	Y = 5	Y = 5	Y =	Y =	Y = 4	Y = 4	Y =	Y =
Duration of Analysis (hrs) = 0.25						Cycle Length C = 95.0		

Lane Group Capacity, Control Delay, and LOS Determination

	EB			WB			NB			SB		
Adj. flow rate	64	680	58	14	272	222	47	85		267	275	48
Lane group cap.	270	1257	515	270	1257	505	176	193		360	405	322
v/c ratio	0.24	0.54	0.11	0.05	0.22	0.44	0.27	0.44		0.74	0.68	0.15
Green ratio	0.16	0.34	0.34	0.16	0.34	0.34	0.11	0.11		0.21	0.21	0.21
Unif. delay d1	35.0	25.5	21.7	34.0	22.5	24.5	39.1	39.9		35.1	34.5	30.6
Delay factor k	0.11	0.14	0.11	0.11	0.11	0.11	0.11	0.11		0.30	0.25	0.11
Increm. delay d2	0.5	0.5	0.1	0.1	0.1	0.6	0.8	1.6		8.0	4.6	0.2
PF factor	0.875	0.661	0.661	0.875	0.661	0.661	1.000	1.000		1.000	1.000	1.000
Control delay	31.1	17.4	14.5	29.8	15.0	16.8	39.9	41.5		43.1	39.1	30.8
Lane group LOS	C	B	B	C	B	B	D	D		D	D	C
Apprch. delay	18.3			16.2			40.9			40.2		
Approach LOS	B			B			D			D		
Intersec. delay	25.6			Intersection LOS						C		

HCS2000™ Copyright © 2000 University of Florida, All Rights Reserved Version 4.1f

PRIORITY ENGINEERING, INC.

INTERSECTION TURNING MOVEMENTS REDUCTION SHEET

.TION: Melrose Dr and San Elijo Rd
Carlsbad, CA

DATE OF COUNT: Tue. 1/17/06
TIME OF COUNT: PM Peak

COUNTED BY: JR
WEATHER: Clear

TIME INTERVAL ENDING AT	FROM NORTH ON (SB) Melrose Dr				FROM SOUTH ON (NB) Dove Trail Rd				FROM EAST ON (WB) San Elijo Rd				FROM WEST ON (EB) San Elijo Rd				INTERVAL TOTALS
	Right	Thru	Left	Peds	Right	Thru	Left	Peds	Right	Thru	Left	Peds	Right	Thru	Left	Peds	
04:16 PM	9	5	99	0	7	7	22	0	54	48	5	0	13	140	11	0	420
04:30 PM	17	11	84	0	1	9	13	0	51	78	1	0	16	136	15	0	432
04:45 PM	15	11	124	0	6	9	10	0	44	61	1	0	10	123	18	0	432
05:00 PM	18	14	113	0	10	8	10	0	48	64	4	0	9	166	12	0	476
05:15 PM	17	17	128	0	12	17	10	0	59	64	3	0	13	147	8	0	495
05:30 PM	12	13	118	0	12	7	15	0	62	70	3	0	14	165	19	0	510
05:45 PM	9	10	102	0	2	13	10	0	42	60	3	0	19	168	22	0	460
06:00 PM	7	11	128	0	0	5	12	0	35	43	1	0	17	142	7	0	408
PEAK HOUR TOTALS	56	54	461	0	36	45	45	0	211	258	13	0	55	646	61	0	INTERSECTION
ALL MOVEMENTS	571				126				482				762				1941
PEAK HOUR FACTOR	0.88				0.81				0.89				0.91				0.95

; = Pedestrians Across Intersection Leg
= Peak Hour Factor

PM PEAK HOUR: 4:45 PM TO 5:45 PM

JCED BY: JR

DATE OF REDUCTION: 1/5/2006

PRIORITY ENGINEERING, INC.

INTERSECTION TURNING MOVEMENTS REDUCTION SHEET

TURNING MOVEMENTS DIAGRAM

PM PEAK HOUR ENDING AT 5:45 PM

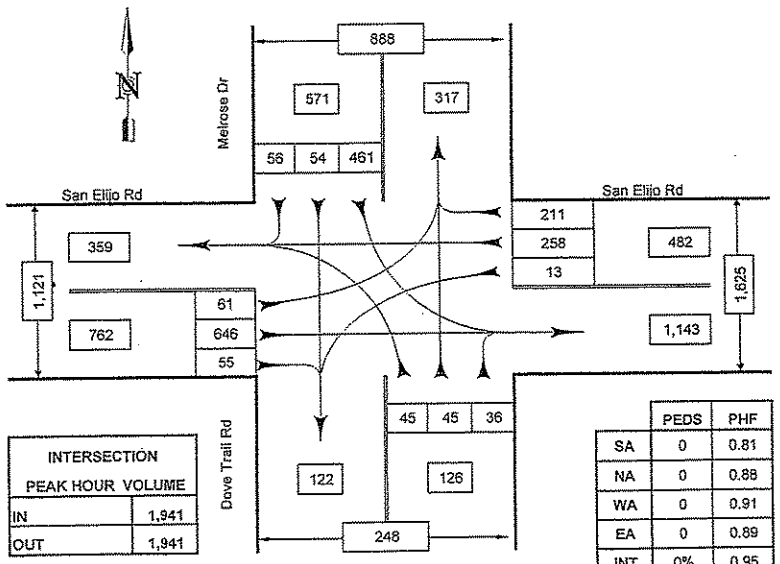

INTERSECTION PEAK HOUR VOLUME	
IN	1,941
OUT	1,941

	PEDS	PHF
SA	0	0.81
NA	0	0.88
WA	0	0.91
EA	0	0.89
INT	0%	0.95

PEDS = Pedestrians
PHF = Peak Hour Factor

Melrose Dr and San Elijo Rd

Carlsbad, CA

COUNTED BY: JR
REDUCED BY: JR
DATE: 1/5/2006

DATE OF COUNT: 1/17/06
TIME OF COUNT: PM Peak
WEATHER: Clear

40-8
EX

TABLE 5-4

Existing Plus Project Intersection Levels of Service Summary - ICU Method
Intersections Within Carlsbad

	Intersection	AM Peak Hour		PM Peak Hour	
		ICU	LOS	ICU	LOS
5	Melrose Dr. at Palomar Airport Rd.	0.83	D	0.71	C
6	Melrose Dr. at Rancho Bravado	0.32	A	0.27	A
7	Melrose Dr. at Poinsettia Ln./Paseo Corto	0.25	A	0.28	A
8	Melrose Dr. at Carillo Wy.	0.39	A	0.37	A
9	Melrose Dr. at Alga Rd.	0.56	A	0.73	C
10	Rancho Santa Fe Rd. at Melrose Dr.	0.57	A	0.54	A
11	Rancho Santa Fe Rd at San Elijo Rd.	0.57	A	0.64	B
12	Rancho Santa Fe Rd at Camino Junipero	0.60	A	0.64	B
13	Rancho Santa Fe Rd. at La Costa Ave.	0.66	B	0.72	C
14	Rancho Santa Fe Rd. at Camino de los Coches	0.48	A	0.55	A
15	Rancho Santa Fe Rd. at Calle Barcelona	0.69	B	0.55	A
16	Rancho Santa Fe Rd. at Olivenhain Rd.	0.67	B	0.74	C
18	El Camino Real at Aviara Pkwy. / Alga Rd.	0.75	C	0.74	C
19	El Camino Real at Costa Del Mar Rd.	0.61	B	0.66	B
20	I-5 SB Ramps at La Costa Ave.	0.56	A	0.55	A
21	I-5 NB Ramps at La Costa Ave.	0.66	B	0.68	B
22	Piraeus St. at La Costa Ave.	0.61	A	0.70	B
23	Saxony Rd. at La Costa Ave.	0.47	A	0.56	A
24	El Camino Real at La Costa Ave.	0.71	C	0.77	C
25	Viejo Castilla Wy. at La Costa Ave.	0.40	A	0.37	A
26	Romeria St. at La Costa Ave.	0.45	A	0.55	A
27	Cadencia St. at La Costa Ave.	0.44	A	0.58	A
37	Amargosa Dr. at Olivenhain Rd.	0.85	D	0.71	C
38	Calle Timiteo at La Costa Ave. / Project Dwy. #2	0.36	A	0.37	A
39	Camino de los Coches at La Costa Ave.	0.38	A	0.27	A
42	La Costa Ave. at Project Driveway #1	0.35	A	0.52	A
43	La Costa Ave. at East Driveway #3 / Paseo Tamarindo ③	0.20	A	0.19	A
44	Rancho Santa Fe Rd. at West Driveway #4 ②	NA	NA	NA	NA
45	Rancho Santa Fe Rd. at East Driveway #5 / Paseo Lupino	0.51	A	0.60	A
46	Rancho Santa Fe Rd at Calle Acervo	0.87	D	0.75	C

Legend:
ICU = Intersection Capacity Utilization
LOS = Level of Service
① = Existing Stop Sign Control; Project Installs Traffic Signals
② = No Conflicting Moves, Right-turn-in Only
③ = Stop Sign Facing Southbound Traffic

LOS	ICU
A	0.00-0.60
B	0.61-0.70
C	0.71-0.80
D	0.81-0.90
E	0.91-1.00
F	Over 1.00

5-A
EXIST. + PROJECT

Melrose Drive at Palomar Airport Road

Lane Configuration for Intersection Capacity Utilization

Pk. Hr. Time Period : 7:30 AM to 8:30 AM		South Appr (NB)			North Appr (SB)			West Appr (EB)			East Appr (WB)		
		Left	Thru	Right	Left	Thru	Right	Left	Thru	Right	Left	Thru	Right
Lane Config-urations	Inside (left) 1	1			1			1			1		
	2	1			1			1			1		
	3		1			1			1			1	
	4		1			1			1			1	
	5		1				1		1	1		1	
	6			1			1						1
	Outside Free-flow 7												
Lane Settings		2	3	1	2	2	2	2	3	0	2	3	1
Capacity		3600	6000	1800	3600	4000	3600	3600	6000	0	3600	6000	1800
Are the North/South phases split (Y/N)?			N										
Are the East/West phases split (Y/N)?			N										
Efficiency Lost Factor		0.10	(+19)			(+28)				(+7)			
Hourly Volume		(+5) 377	342	152	31	531	1115	356	682	87	93	1852	38
Adjusted Hourly Volume		377	342	152	31	531	759	356	769	0	93	1852	38
Utilization Factor		0.10	0.06	0.08	0.01	0.13	0.21	0.10	0.13	0.00	0.03	0.31	0.02
Critical Factors		0.10 (0.11)					0.21	0.10				0.31	

ICU Ratio = 0.82 (0.83) LOS = D (LOS = D)

Turning Movements at Intersection of : **Melrose Drive and Palomar Airport Road**

Time : 7:30 AM to 8:30 AM
Date : 07/11/07
Day : Wednesday
Name : Lance, Lotous

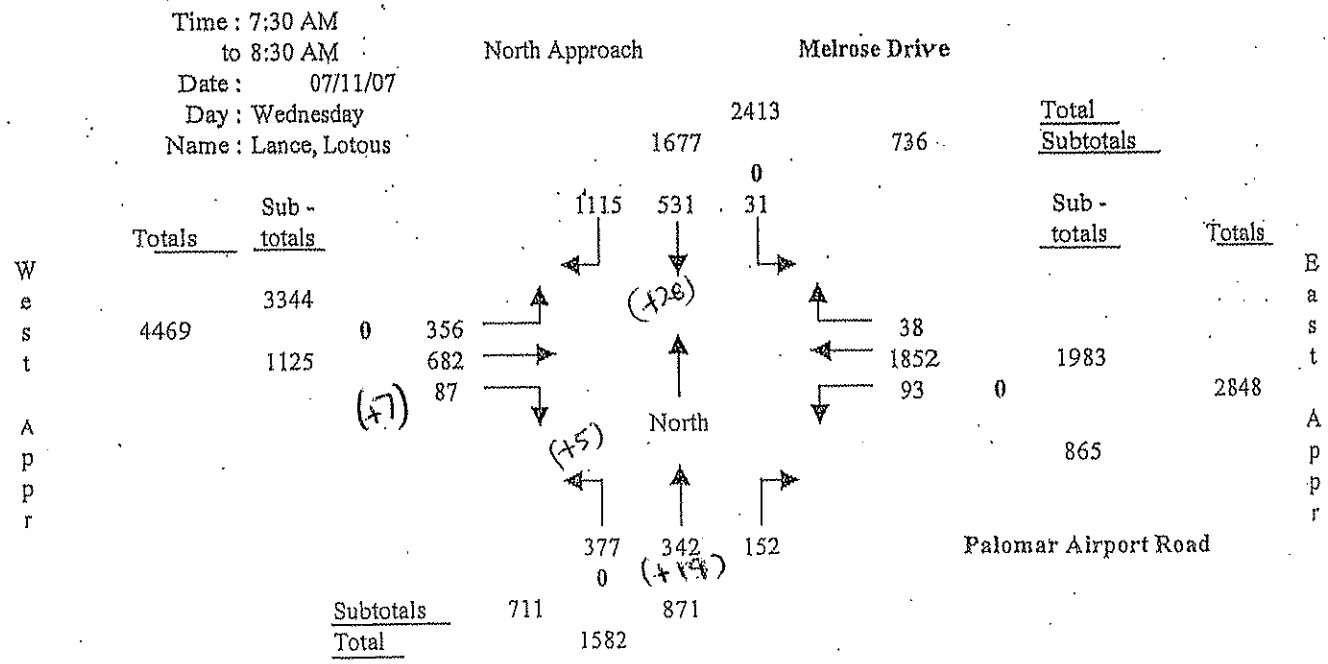

Note : Left-turn volumes include U-turns. U-turns in bold.

5-P

EXIST. + PROJECT

Melrose Drive at Palomar Airport Road

Lane Configuration for Intersection Capacity Utilization

Pk. Hr. Time Period : 5:00 PM to 6:00 PM		South Appr (NB)			North Appr (SB)			West Appr (EB)			East Appr (WB)		
		Left	Thru	Right	Left	Thru	Right	Left	Thru	Right	Left	Thru	Right
Lane Config - urations	Inside (left) 1	1			1			1			1		
	2	1			1			1			1		
	3		1			1			1			1	
	4		1			1			1			1	
	5		1				1		1	1		1	
	6			1			1						1
	Outside Free-flow 7												
Lane Settings		2	3	1	2	2	2	2	3	0	2	3	1
Capacity		3600	6000	1800	3600	4000	3600	3600	6000	0	3600	6000	1800
Are the North/South phases split (Y/N)?				N									
Are the East/West phases split (Y/N)?				N									
Efficiency Lost Factor		0.10											
Hourly Volume		200	521 (+52)	111	53	406 (+51)	409	777	1981	285 (+13)	199	799	64
Adjusted Hourly Volume		200 (+13)	521	111	53	406	409	777	2266	0	199	799	64
Utilization Factor		0.06	0.09	0.06	0.01	0.10	0.11	0.22	0.38	0.00	0.06	0.13	0.04
Critical Factors		0.06 ✓					0.11 ✓		0.38 ✓		0.06 ✓		

ICU Ratio = 0.71 ✓ LOS = C ✓

(LOS = C)

Turning Movements at Intersection of : **Melrose Drive and Palomar Airport Road**

Time : 5:00 PM
to 6:00 PM
Date : 07/11/07
Day : Wednesday
Name : Lance, Lotous

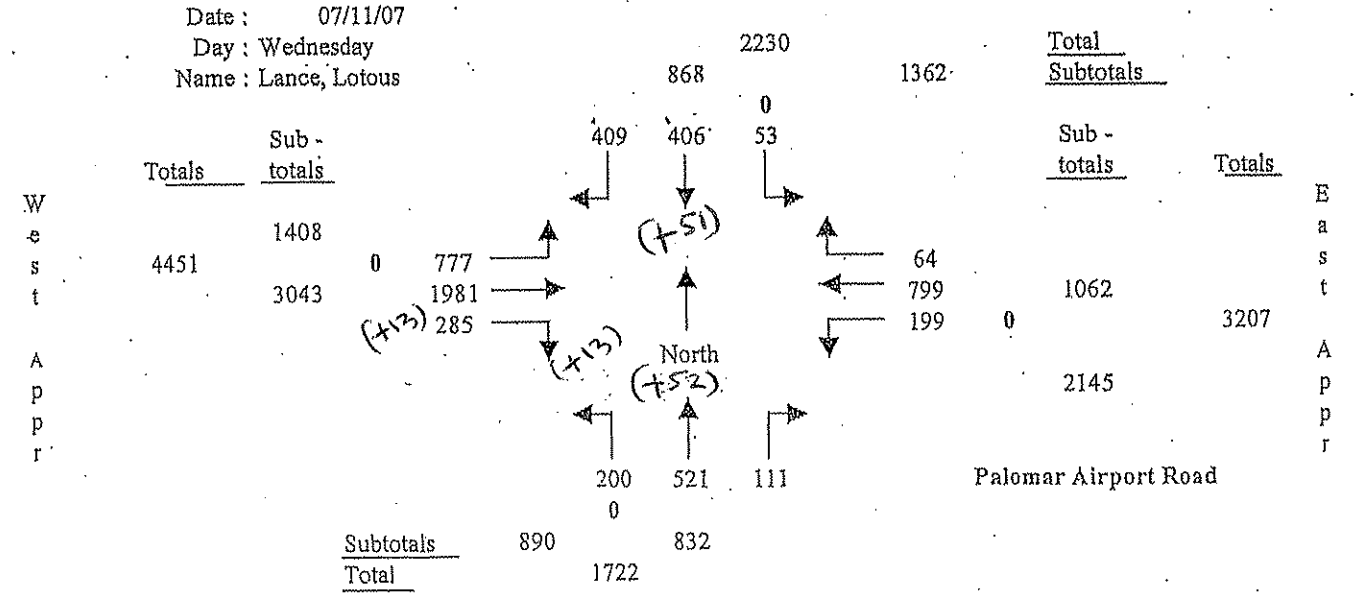

Note : Left-turn volumes include U-turns. U-turns in bold.

Intersection Capacity Utilization (ICU) Worksheet

6 A-P EX (+PROJECT)

ITERSECTION CAPACITY UTILIZATION

ITERSECTION: Melrose Dr (N/S) Rancho Bravado (E/W)
CENARIO : Existing
OUNT DATE: Wed 08/06/03 PEAK HR: AM
NALYST : MTM AGENCY : Willdan
(+PROJECT)

MOVEMENT	# OF LANES	CAPACITY	AM PEAK HOUR	UNADJUSTED VOLUME	AM PEAK V/C	
B Left	1	1,800	3		0.00	
B Thru+RT	3	6,000	634+10	(+24)	0.12	*
B Right	Ø	—	60		—	
B Left	1	1,800	17		0.01	*
B Thru +RT	3	6,000	453+5	(+35)	0.08	
B Right	Ø	—	5		—	
B Left	1	1,800	4		0.00	
B Thru+RT	1	2,000	7+14		0.01	*
B Right	Ø	—	14		—	
/B Left	1	1,800	136		0.08	*
/B Thru+RT	1	2,000	2+90		0.05	
/B Right	Ø	—	90		—	
ORTH/SOUTH CRITICAL SUMS					0.13	
AST/WEST CRITICAL SUMS					0.09	
UM OF CRITICAL V/C RATIO					0.22	
DJUSTMENT FOR LOST TIME					0.10	
NTERSECTION CAPACITY UTILIZATION (ICU)					0.32	
EVEL OF SERVICE (LOS)					A	

IOTES:

Denotes Critical Movements
* Extra wide outside lane

LOS	Maximum V/C
A	≤0.60
B	≤0.70
C	≤0.80
D	≤0.90
E	≤1.00
F	>1.00

INTERSECTION CAPACITY UTILIZATION

INTERSECTION: Melrose Dr (N/S) Rancho Bravado (E/W)
SCENARIO : Existing
COUNT DATE: Wed 08/06/03 PEAK HR: PM
ANALYST : MTM AGENCY : Willdan
(+PROJECT)

MOVEMENT	# OF LANES	CAPACITY	PM PEAK HOUR	UNADJUSTED VOLUME	PM PEAK V/C		
NB Left	1	1,800	16		0.01	*	
NB Thru +RT	3	6,000	401+12	(+65)	0.09		0.10
NB Right	Ø	—	126		—		
SB Left	1	1,800	78		0.04		
SB Thru +RT	3	6,000	635+12	(+64)	0.11	*	0.12
SB Right	Ø	—	12		—		
EB Left	1	1,800	3		0.00		
EB Thru +RT	1	2,000	4+7		0.01	*	
EB Right	Ø	—	7		—		
WB Left	1	1,800	53		0.03	*	
WB Thru+RT	1	2,000	1+46		0.02		
WB Right	Ø	—	46		—		
NORTH/SOUTH CRITICAL SUMS					0.13		
EAST/WEST CRITICAL SUMS					0.04		
SUM OF CRITICAL V/C RATIO					0.17		
ADJUSTMENT FOR LOST TIME					0.10		
INTERSECTION CAPACITY UTILIZATION (ICU)					0.27		
LEVEL OF SERVICE (LOS)					A		

NOTES:

* Denotes Critical Movements
** Extra wide outside lane

LOS	Maximum V/C
A	≤0.60
B	≤0.70
C	≤0.80
D	≤0.90
E	≤1.00
F	>1.00

6 A+P EX (+PROJECT)

Intersection Capacity Utilization (ICU) Worksheet

7 A-P EX (+PROJECT)

INTERSECTION CAPACITY UTILIZATION

INTERSECTION: Melrose Dr (N/S) Poinsettia Ln/Paseo Co (E/W)
SCENARIO: Existing
COUNT DATE: Wed 08/06/03 PEAK HR: AM
ANALYST: MTM AGENCY: Willdan

(+PROJECT)

MOVEMENT	# OF LANES	CAPACITY	AM PEAK HOUR	~~UNADJUSTED VOLUME~~	AM PEAK V/C	
NB Left	2	3,600	28	(+14)	0.01	
NB Thru +RT	3	6,000	548 +11	(+24)	0.09	*
NB Right	Ø	—	11	(+5)	—	
SB Left	1	1,800	17		0.01	*
SB Thru	3	6,000	508	(+35)	0.08	
SB Right	1	1,800	15		0.00	
EB Left	2	3,600	49		0.01	*
EB Thru	1	2,000	0		0.00	
EB Right	1	1,800	24	(+22)	0.01	
WB Left	1	1,800	29	(+7)	0.02	
WB Thru +RT.	1	2,000	2 +53		0.03	*
WB Right	Ø	—	~~53~~		—	
NORTH/SOUTH CRITICAL SUMS					0.10 (0.11)	
EAST/WEST CRITICAL SUMS					0.04	
SUM OF CRITICAL V/C RATIO					0.14 (0.15)	
ADJUSTMENT FOR LOST TIME					0.10	
INTERSECTION CAPACITY UTILIZATION (ICU)					0.24 (0.25)	
LEVEL OF SERVICE (LOS)					A	

NOTES:
SB-RT OVERLAP

* Denotes Critical Movements
** Extra wide outside lane

LOS	Maximum V/C
A	≤0.60
B	≤0.70
C	≤0.80
D	≤0.90
E	≤1.00
F	>1.00

INTERSECTION CAPACITY UTILIZATION

INTERSECTION: Melrose Dr (N/S) Poinsettia Ln/Paseo Co (E/W)
SCENARIO: Existing
COUNT DATE: Wed 08/06/03 PEAK HR: PM
ANALYST: MTM AGENCY: Willdan

(+PROJECT)

MOVEMENT	# OF LANES	CAPACITY	PM PEAK HOUR	~~UNADJUSTED VOLUME~~	PM PEAK V/C	
NB Left	2	3,600	18	(+39)	0.01	* (0.02)
NB Thru +RT	3	6,000	345 +22	(+65)	0.06	
NB Right	Ø	—	22	(+13)	—	
SB Left	1	1,800	52		0.03	
SB Thru	3	6,000	594	(+64)	0.10	* (0.11)
SB Right	1	1,800	35	53	0.02	
EB Left	2	3,600	42		0.01	
EB Thru	1	2,000	2		0.00	
EB Right	1	1,800	36	(+38)	0.02	*
WB Left	1	1,800	14	(+13)	0.01	
WB Thru +RT	1	2,000	2 +23		0.01	*
WB Right	Ø	—	~~23~~		—	
NORTH/SOUTH CRITICAL SUMS				0.13	0.11	
EAST/WEST CRITICAL SUMS				0.05	0.03	
SUM OF CRITICAL V/C RATIO				0.18	0.14	
ADJUSTMENT FOR LOST TIME				0.10	0.10	
INTERSECTION CAPACITY UTILIZATION (ICU)				(0.28)	0.24	
LEVEL OF SERVICE (LOS)				A	A	

NOTES:
SB-RT OVERLAP

* Denotes Critical Movements
** Extra wide outside lane

LOS	Maximum V/C
A	≤0.60
B	≤0.70
C	≤0.80
D	≤0.90
E	≤1.00
F	>1.00

7 A+P EX (+PROJECT)

8 A-P EX

Intersection Capacity Utilization (ICU) Worksheet

NTERSECTION CAPACITY UTILIZATION

NTERSECTION: Melrose Dr (N/S) Carillo Wy (E/W)
CENARIO : Existing
COUNT DATE: Wed 08/06/03 PEAK HR: AM
ANALYST : MTM AGENCY : Willdan

(+PROJECT)

MOVEMENT	# OF LANES	CAPACITY	AM PEAK HOUR	~~UNADJUSTED VOLUME~~		AM PEAK V/C	
NB Left	1	1,800	117	(+10)	0.07	0.07	*
NB Thru +RT	3	6,000	492+5	(+~~53~~)	0.09	0.08	
NB Right	Ø	—	5	(+10)		—	
SB Left	1	1,800	3			0.00	
SB Thru +RT	3	6,000	370+224	(+64)	0.11	0.10	*
SB Right	Ø	—	~~232~~			—	
EB Left	1	1,800	147			0.08	*
EB Thru +RT	1	2,000	15+47		0.04	0.0	
EB Right	Ø	—	47	(+14)		—	
WB Left	1	1,800	20	(+14)	0.01	0.01	
WB Thru +RT	1	2,000	50+8		0.03	0.03	*
WB Right	Ø	—	8			—	
NORTH/SOUTH CRITICAL SUMS					0.18	0.17	
EAST/WEST CRITICAL SUMS					0.11	0.11	
SUM OF CRITICAL V/C RATIO					0.29	0.28	
ADJUSTMENT FOR LOST TIME					0.10	0.10	
INTERSECTION CAPACITY UTILIZATION (ICU)					(0.39)	~~0.38~~	
LEVEL OF SERVICE (LOS)					A	A	

NOTES:

* Denotes Critical Movements
** Extra wide outside lane

LOS	Maximum V/C
A	≤0.60
B	≤0.70
C	≤0.80
D	≤0.90
E	≤1.00
F	>1.00

INTERSECTION CAPACITY UTILIZATION

INTERSECTION: Melrose Dr (N/S) Carillo Wy (E/W)
SCENARIO : Existing
COUNT DATE: Wed 08/06/03 PEAK HR: PM
ANALYST : MTM AGENCY : Willdan

(+PROJECT)

MOVEMENT	# OF LANES	CAPACITY	PM PEAK HOUR	~~UNADJUSTED VOLUME~~		PM PEAK V/C	
NB Left	1	1,800	27	(+26)	0.03	0.02	*
NB Thru +RT	3	6,000	388+19	(+118)	0.09	0.07	
NB Right	Ø	—	19	(+26)		—	
SB Left	1	1,800	13			0.01	
SB Thru +RT	3	6,000	591+65	(+115)	0.13	0.11	*
SB Right	Ø	—	68			—	
EB Left	1	1,800	144			0.08	*
EB Thru +RT	1	2,000	36+81		0.07	0.06	
EB Right	Ø	—	81	(+26)		—	
WB Left	1	1,800	11	(+26)	0.02	0.01	
WB Thru +RT	1	2,000	9+8			0.01	*
WB Right	Ø	—	8			—	
NORTH/SOUTH CRITICAL SUMS					0.16	0.13	
EAST/WEST CRITICAL SUMS					0.09	0.09	
SUM OF CRITICAL V/C RATIO					0.27	0.22	
ADJUSTMENT FOR LOST TIME					0.10	0.10	
INTERSECTION CAPACITY UTILIZATION (ICU)					(0.37)	~~0.32~~	
LEVEL OF SERVICE (LOS)					A	A	

NOTES:

* Denotes Critical Movements
** Extra wide outside lane

LOS	Maximum V/C
A	≤0.60
B	≤0.70
C	≤0.80
D	≤0.90
E	≤1.00
F	>1.00

+PROJECT 8 A+P EX

Date Printed: 2/12/2006
Page 1 of 1

8 Melrose @ Carillo
Existing

9- A
EXIST. + PROJECT

Melrose Drive at Alga Road

Lane Configuration for Intersection Capacity Utilization

Pk. Hr. Time Period : 7:15 AM to 8:15 AM

		South Appr (NB)			North Appr (SB)			West Appr (EB)			East Appr (WB)		
		Left	Thru	Right	Left	Thru	Right	Left	Thru	Right	Left	Thru	Right
Lane Configurations	Inside (left) 1	1			1			1			1		
	2		1			1			1	1		1	1
	3		1			1				1			
	4		1	1		1	1						
	5												
	6												
	Outside 7												
	Free-flow												
Lane Settings		1	3	0	1	3	0	1	1	1	1	1	0
Capacity		1800	6000	0	1800	6000	0	1800	2000	1800	1800	2000	0
Are the North/South phases split (Y/N)?				N									
Are the East/West phases split (Y/N)?				N									
Efficiency Lost Factor		0.10	(+63)			(+92)				(+29)			
Hourly Volume		347	590	1	3	524	148	112	5	243	10	16	7
Adjusted Hourly Volume		(+19) 347	591	0	3	672	0	112	248	0	10	23	0
Utilization Factor		0.19	0.10	0.00	0.00	0.11	0.00	0.06	0.12	0.00	0.01	0.01	0.00
Critical Factors		0.19				0.11			0.12		0.01		
		(0.20)				(0.13)							

ICU Ratio = 0.53 (0.56) LOS = A (LOS = A)

Turning Movements at Intersection of : Melrose Drive and Alga Road

Time : 7:15 AM to 8:15 AM
Date : 08/09/07
Day : Thursday
Name : Newera, Leanne

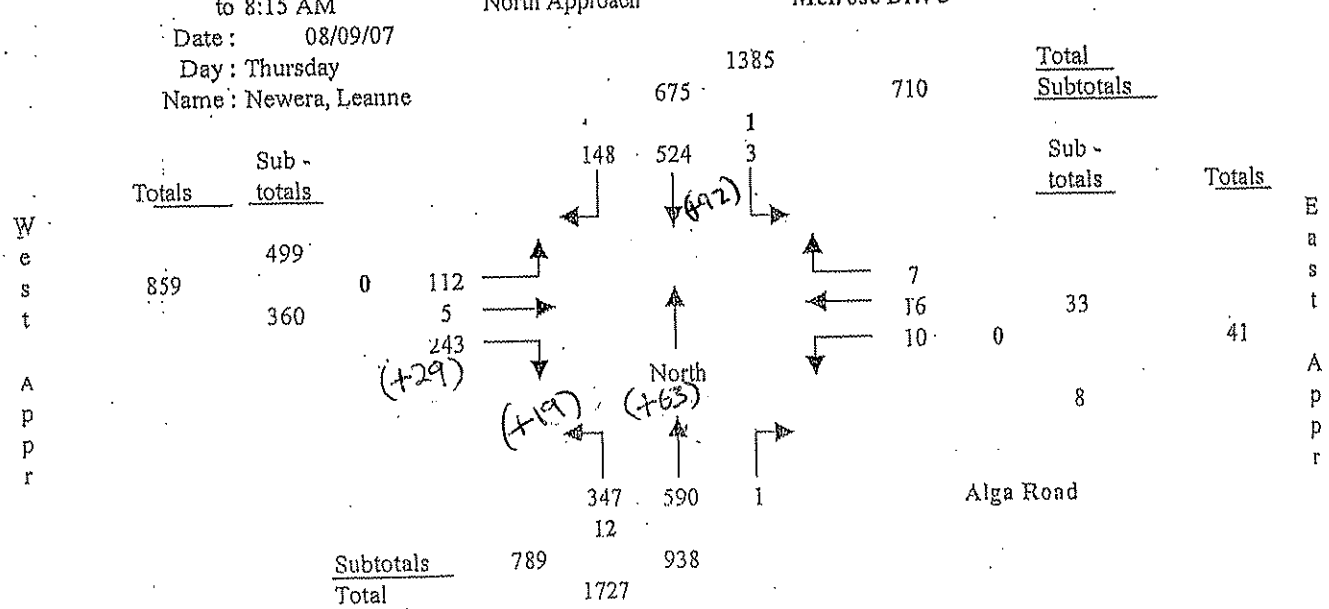

Note : Left-turn volumes include U-turns. U-turns in bold.

9-P

EXIST. + PROJECT

Melrose Drive at Alga Road

Lane Configuration for Intersection Capacity Utilization

Pk. Hr. Time Period : 4:30 PM to 5:30 PM		South Appr (NB)			North Appr (SB)			West Appr (EB)			East Appr (WB)		
		Left	Thru	Right	Left	Thru	Right	Left	Thru	Right	Left	Thru	Right
Lane Config-urations	Inside (left) 1	1			1			1			1		
	2		1			1			1	1		1	1
	3		1			1				1			
	4		1	1		1	1						
	5												
	6												
	Outside Free-flow 7												
Lane Settings		1	3	0	1	3	0	1	1	1	1	1	0
Capacity		1800	6000	0	1800	6000	0	1800	2000	1800	1800	2000	0
Are the North/South phases split (Y/N)?				N									
Are the East/West phases split (Y/N)?				N									
Efficiency Lost Factor		0.10	(+169)			(+167)				(+52)			
Hourly Volume		(+52) 340	479	3	8	712	125	165	23	441	11	11	11
Adjusted Hourly Volume		340	482	0	8	837	0	165	464	0	11	22	0
Utilization Factor		0.19	0.08	0.00	0.00	0.14	0.00	0.09	0.23	0.00	0.01	0.01	0.00
Critical Factors		0.19				0.14			0.23		0.01		
		(0.22)				(0.17)							

ICU Ratio = 0.67 (0.73) LOS = B (LOS = C)

Turning Movements at Intersection of : Melrose Drive and Alga Road

Time : 4:30 PM to 5:30 PM
Date : 08/09/07
Day : Thursday
Name : Newera, Leanne

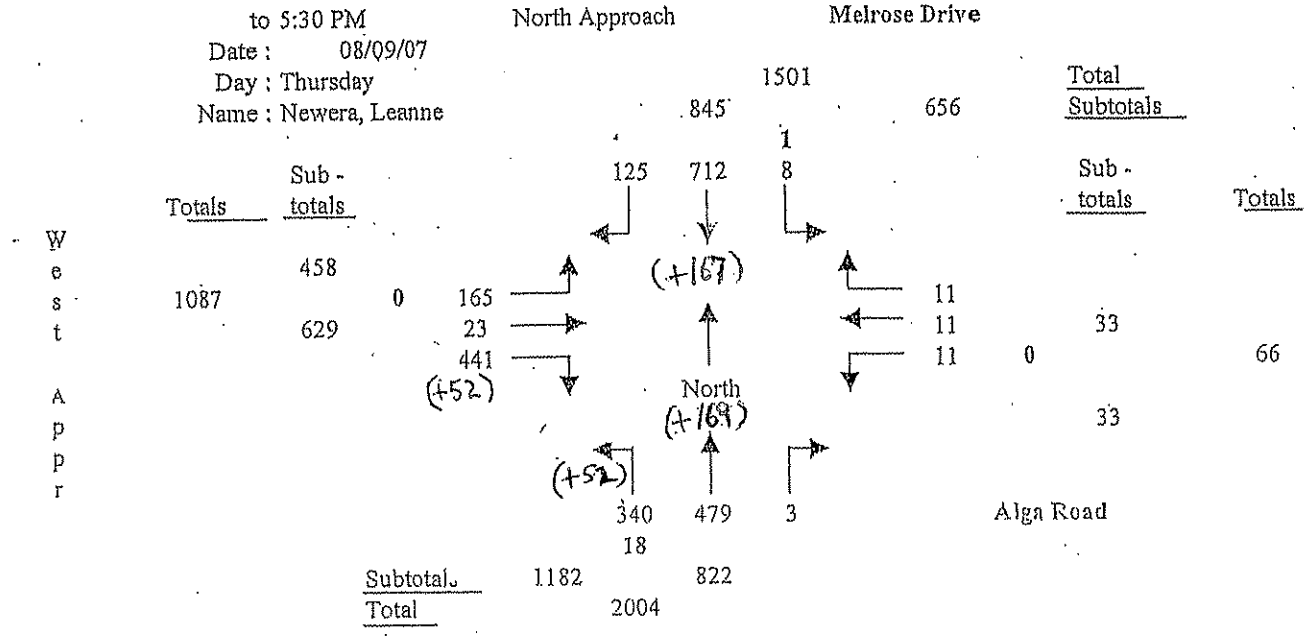

Note : Left-turn volumes include U-turns. U-turns in bold.

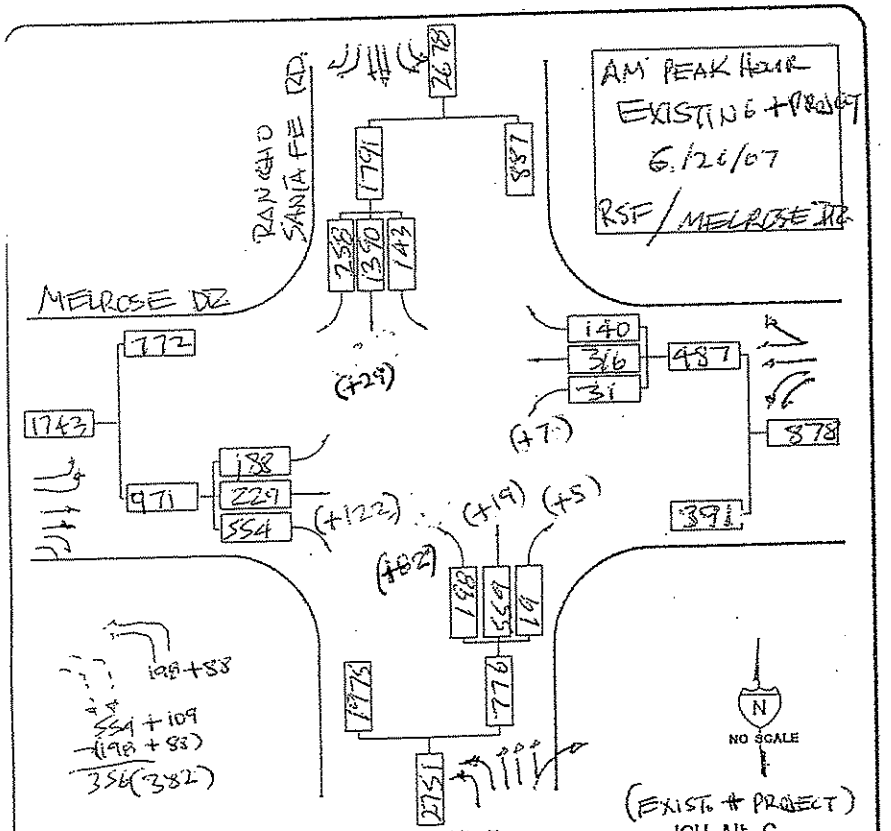

ICU Alt. A			ICU Alt. B			ICU Alt. C		
MOVE	CAPACITY	ICU	MOVE	CAPACITY	ICU	MOVE	CAPACITY	ICU
	1390/6000	0.23					1419/6000	0.24
	198/3600	0.06					280/3600	0.08
	356/3600	0.10					398/3600	0.11
	31/3600	0.01					38/3600	0.01
	+	0.10					+	0.10
		0.50						0.54

L.O.S. ____ No mitigation — LOS A

L.O.S. ____ Mitigation

L.O.S. ____ Mitigation — LOS A

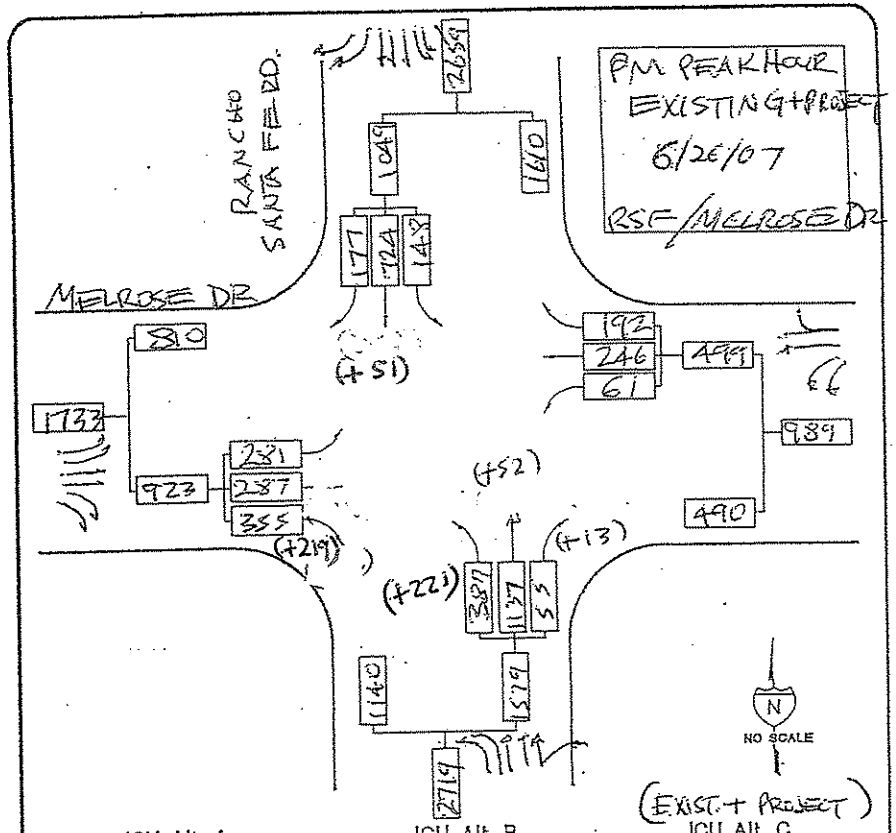

ICU Alt. A			ICU Alt. B			ICU Alt. C		
MOVE	CAPACITY	ICU	MOVE	CAPACITY	ICU	MOVE	CAPACITY	ICU
	246+FT/4000	0.11					NC	0.11
	281/3600	0.08					NC	0.08
	148/3600	0.04					NC	0.04
	1137+55/6000	0.20					1257/6000	0.21
	+	0.10					+	0.10
		0.53						0.54

L.O.S. ____ No mitigation — LOS A

L.O.S. ____ Mitigation

L.O.S. ____ Mitigation — LOS A

NC = NO CHANGE

PAGE OF

10 A & P EX + PROJECT

MJ

URBAN SYSTEMS

11-A
EXIST. + PROJECT

Rancho Santa Fe Road at San Elijo Road

Lane Configuration for Intersection Capacity Utilization

Pk. Hr. Time Period : 8:00 AM to 9:00 AM

		South Appr (NB)			North Appr (SB)			West Appr (EB)			East Appr (WB)		
		Left	Thru	Right	Left	Thru	Right	Left	Thru	Right	Left	Thru	Right
Lane Configurations	Inside (left) 1	1			1			1			1		
	2		1		1				1	1	1		
	3		1			1						1	
	4		1			1							1
	5			1		1							
	6						1						
	Outside 7												
	Free-flow												
Lane Settings		1	3	1	2	3	1	1	1	0	2	1	1
Capacity		1800	6000	1800	3600	6000	1800	1800	2000	0	3600	2000	1800
Are the North/South phases split (Y/N)?				N									
Are the East/West phases split (Y/N)?				N									
Efficiency Lost Factor		0.10	(+105)	(+48)		(+157)				(+14)	(+72)		
Hourly Volume		6	800	178	111	1447	12	9	1	3	616	4	131
Adjusted Hourly Volume		(+10) 6	800	178	111	1447	12	9	4	0	616	4	131
Utilization Factor		0.00	0.13	0.10	0.03	0.24	0.01	0.01	0.00	0.00	0.17	0.00	0.07
Critical Factors		0.00				0.24			0.00		0.17		
		(0.01)				(0.27)					(0.19)		

ICU Ratio = 0.51 (0.57) LOS = A
(LOS = A)

Turning Movements at Intersection of : **Rancho Santa Fe Road and San Elijo Road**

Time : 8:00 AM to 9:00 AM
Date : 08/08/07
Day : Wednesday
Name : Lance, Lotous

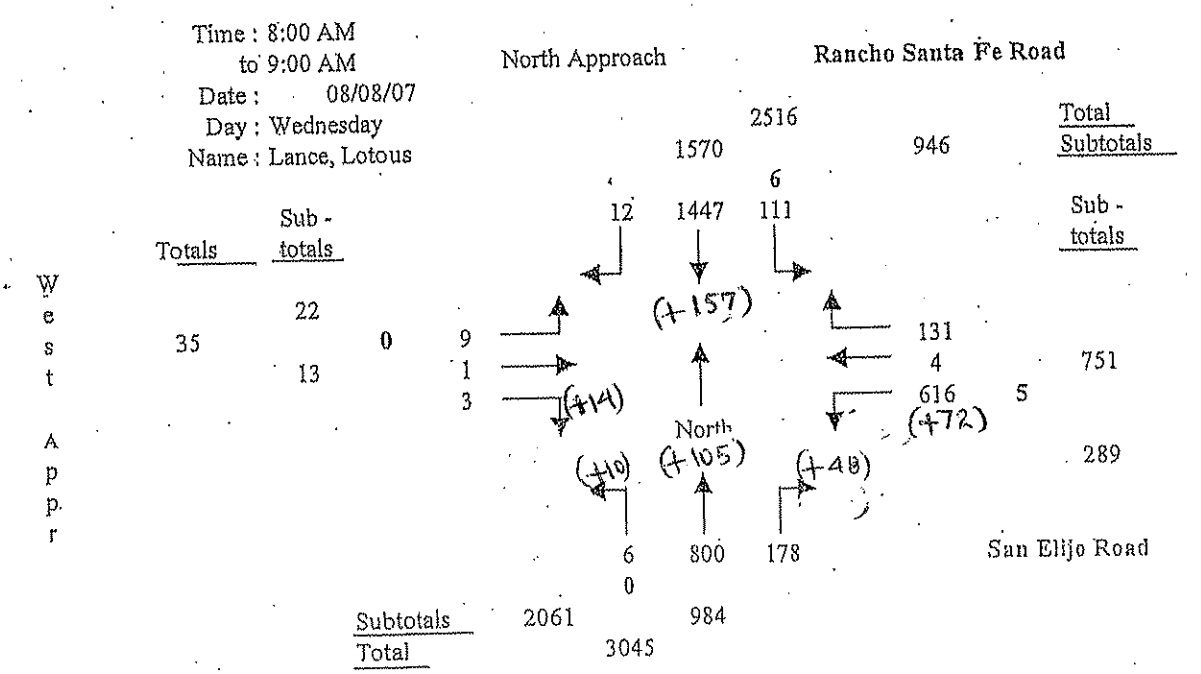

South Approach

Note : Left-turn volumes include U-turns. U-turns in bold.

11 - P
EXIST. + PROJ'D

Rancho Santa Fe Road at San Elijo Road

Lane Configuration for Intersection Capacity Utilization

Pk. Hr. Time Period : 5:00 PM to 6:00 PM		South Appr (NB)			North Appr (SB)			West Appr (EB)			East Appr (WB)		
		Left	Thru	Right	Left	Thru	Right	Left	Thru	Right	Left	Thru	Right
Lane Config-urations	Inside (left) 1	1			1			1			1		
	2		1		1				1	1	1		
	3		1			1						1	
	4		1			1							1
	5			1		1							
	6						1						
	Outside 7												
	Free-flow												
Lane Settings		1	3	1	2	3	1	1	1	0	2	1	1
Capacity		1800	6000	1800	3600	6000	1800	1800	2000	0	3600	2000	1800
Are the North/South phases split (Y/N)?				N									
Are the East/West phases split (Y/N)?				N									
Efficiency Lost Factor		0.10	(+285)	(+130)		(+277)			(+26)		(+127)		
Hourly Volume	(+26)	2	1320	671	229	1099	0	0	1	1	307	0	81
Adjusted Hourly Volume		2	1320	671	229	1099	0	0	2	0	307	0	81
Utilization Factor		0.00	0.22	0.37	0.06	0.18	0.00	0.00	0.00	0.00	0.09	0.00	0.05
Critical Factors		(0.01)		0.37	0.06				0.00		0.09		
				(0.45)					(0.01)		(0.12)		

ICU Ratio = 0.62 (0.64) LOS = B (LOS = B)

Turning Movements at Intersection of : **Rancho Santa Fe Road and San Elijo Road**

Time : 5:00 PM to 6:00 PM
Date : 08/08/07
Day : Wednesday
Name : Lance, Lotous

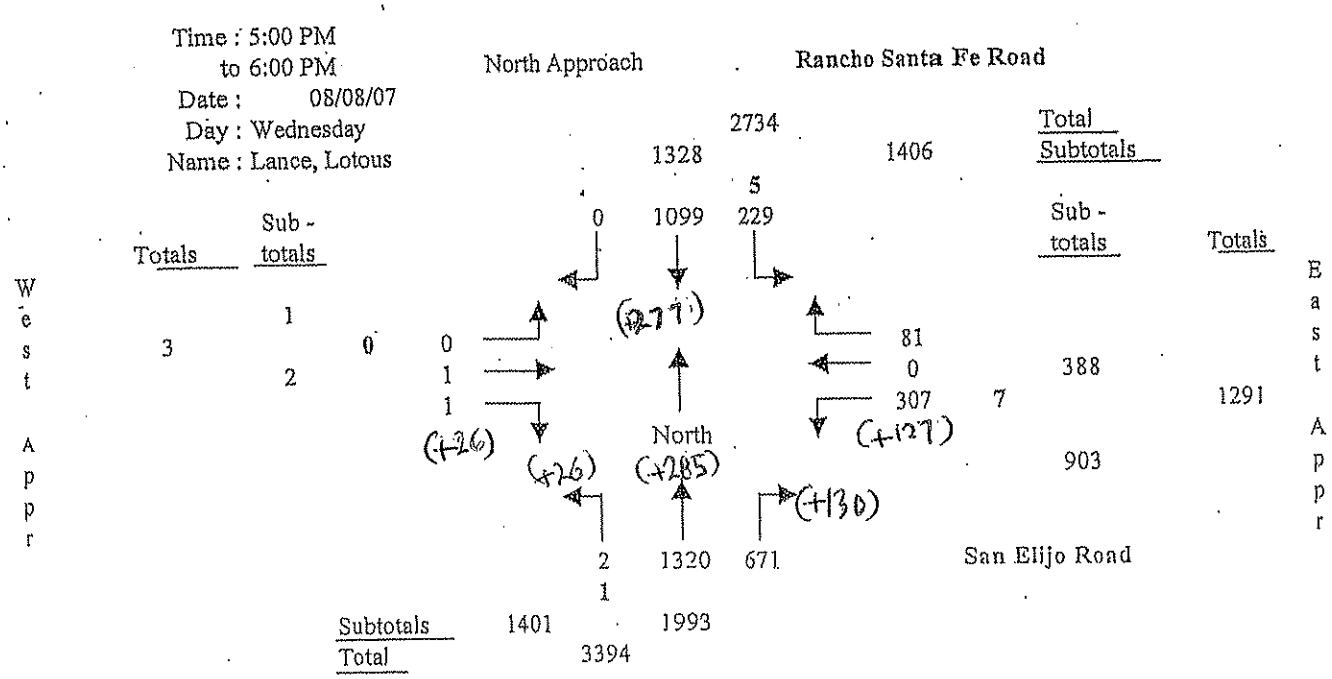

Note : Left-turn volumes include U-turns. U-turns in bold.

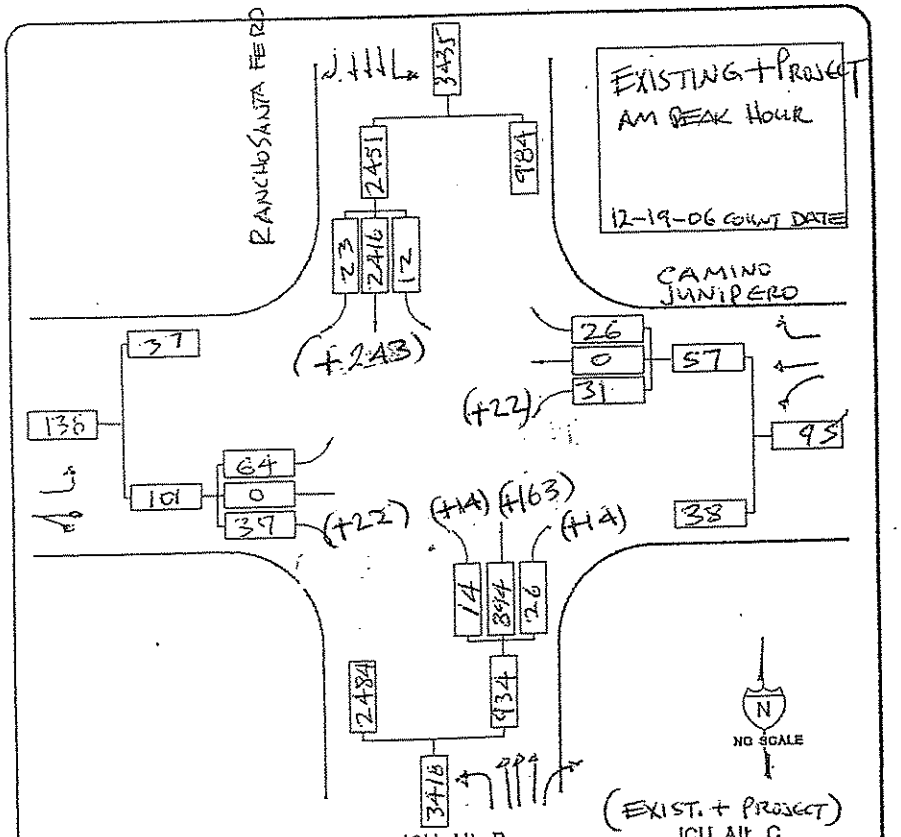

(EXIST. + PROJECT)

ICU Alt. A			ICU Alt. B			ICU Alt. C		
MOVE	CAPACITY	ICU	MOVE	CAPACITY	ICU	MOVE	CAPACITY	ICU
↓↓↓	2416/6000	0.40				↓↓↓	2659/6000	0.44
↰	14/1800	0.01				↰	28/1800	0.02
←	0/2000	0.00				←	NC	0.00
↱	64/1800	0.04				↱	NC	0.04
LOST TIME +		0.10					+	0.10
		0.55						0.60

L.O.S. ____ No mitigation — LOS A

L.O.S. ____ Mitigation

L.O.S. ____ Mitigation — LOS A

NC = NO CHANGE

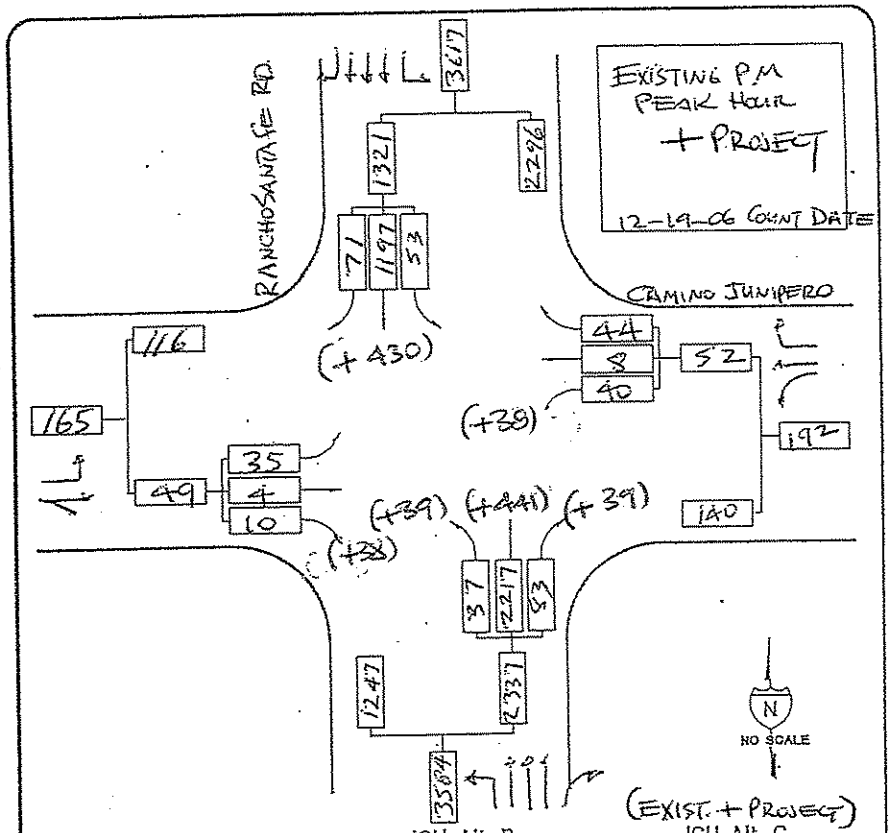

(EXIST. + PROJECT)

ICU Alt. A			ICU Alt. B			ICU Alt. C		
MOVE	CAPACITY	ICU	MOVE	CAPACITY	ICU	MOVE	CAPACITY	ICU
↳	53/1800	0.03				↳	NC	0.03
↑↑↑	2217/6000	0.37				↑↑↑	2658/6000	0.44
↶	40/1800	0.02				↶	78/1800	0.04
↖	14/1800	0.01				↖	60/1800	0.03
LOST TIME		+0.10					+	0.10
		0.53						0.64

L.O.S. ____ No mitigation — LOS A

L.O.S. ____ Mitigation

L.O.S. ____ Mitigation — LOS B

PAGE OF + PROJECT

12. EX A&P

MJ

URBAN SYSTEMS

13-A
EXIST. + PROJECT

Rancho Santa Fe Road at La Costa Avenue

Lane Configuration for Intersection Capacity Utilization

Pk. Hr. Time Period : 8:00 AM to 9:00 AM		South Appr (NB)			North Appr (SB)			West Appr (EB)			East Appr (WB)		
		Left	Thru	Right	Left	Thru	Right	Left	Thru	Right	Left	Thru	Right
Lane Configurations	Inside (left) 1	1			1			1			1		
	2	1			1				1			1	
	3		1			1			1	1		1	1
	4		1			1							
	5		1	1		1	1						
	6												
	Outside 7												
	Free-flow												
Lane Settings		2	3	0	2	3	0	1	2	0	1	2	0
Capacity		3600	6000	0	3600	6000	0	1800	4000	0	1800	4000	0
Are the North/South phases split (Y/N)?				N									
Are the East/West phases split (Y/N)?				N									
Efficiency Lost Factor		0.10	(+47)	(+134)	(+70)	(+53)	(+33)	(+38)	(+95)		(+70)	(+57)	(+20)
Hourly Volume		83	622	3	47	1737	274	229	70	134	31	94	51
Adjusted Hourly Volume		83	625	0	47	2011	0	229	204	0	31	145	0
Utilization Factor		0.02	0.10	0.00	0.01	0.34	0.00	0.13	0.05	0.00	0.02	0.04	0.00
Critical Factors		0.02				0.34		0.13 (0.15)				0.04 (0.05)	

ICU Ratio = 0.63 (0.66) LOS = (B)

Turning Movements at Intersection of : Rancho Santa Fe Road and La Costa Avenue

Time : 8:00 AM to 9:00 AM
Date : 08/08/07
Day : Wednesday
Name : Robert, Jason

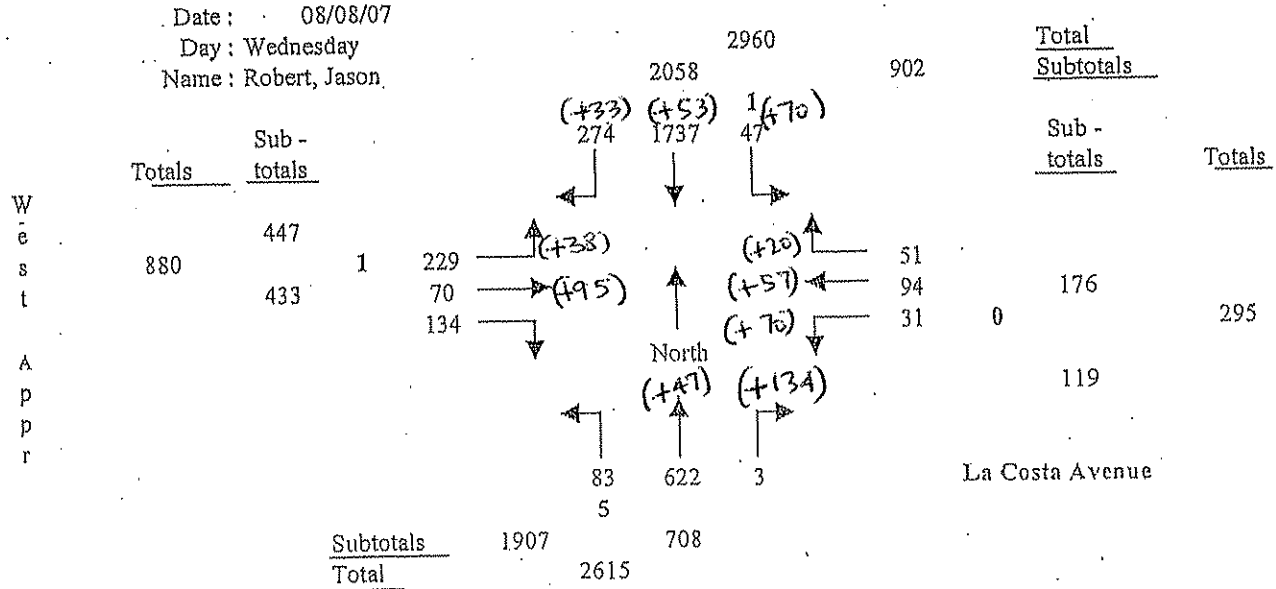

Note : Left-turn volumes include U-turns. U-turns in bold.

13-P
EXIST. + PROJECT

Rancho Santa Fe Road at La Costa Avenue

Lane Configuration for Intersection Capacity Utilization

Pk. Hr. Time Period : 5:00 PM to 6:00 PM		South Appr (NB)			North Appr (SB)			West Appr (EB)			East Appr (WB)		
		Left	Thru	Right	Left	Thru	Right	Left	Thru	Right	Left	Thru	Right
Lane Config-urations	Inside (left) 1	1			1			1			1		
	2	1			1				1			1	
	3		1			1			1	1		1	1
	4		1			1							
	5		1	1		1	1						
	6												
	Outside 7												
	Free-flow												
Lane Settings		2	3	0	2	3	0	1	2	0	1	2	0
Capacity		3600	6000	0	3600	6000	0	1800	4000	0	1800	4000	0
Are the North/South phases split (Y/N)?				N									
Are the East/West phases split (Y/N)?				N									
Efficiency Lost Factor		0.10	(+107)	(+198)	(+36)	(+97)	(+73)	(+80)	(+148)		(+215)	(+163)	(+68)
Hourly Volume		161	1451	19	118	1028	234	379	168	145	24	79	45
Adjusted Hourly Volume		161	1470	0	118	1262	0	379	313	0	24	124	0
Utilization Factor		0.04	0.25	0.00	0.03	0.21	0.00	0.21	0.08	0.00	0.01	0.03	0.00
Critical Factors			0.25		0.03 ✓			0.21				0.03	
			(0.26) ✓					(0.26) ✓				(0.07) ✓	

ICU Ratio = 0.62 (0.72) ✓ LOS = B (C) ✓

Turning Movements at Intersection of : Rancho Santa Fe Road and La Costa Avenue

Time : 5:00 PM to 6:00 PM
Date : 08/08/07
Day : Wednesday
Name : Robert, Jason

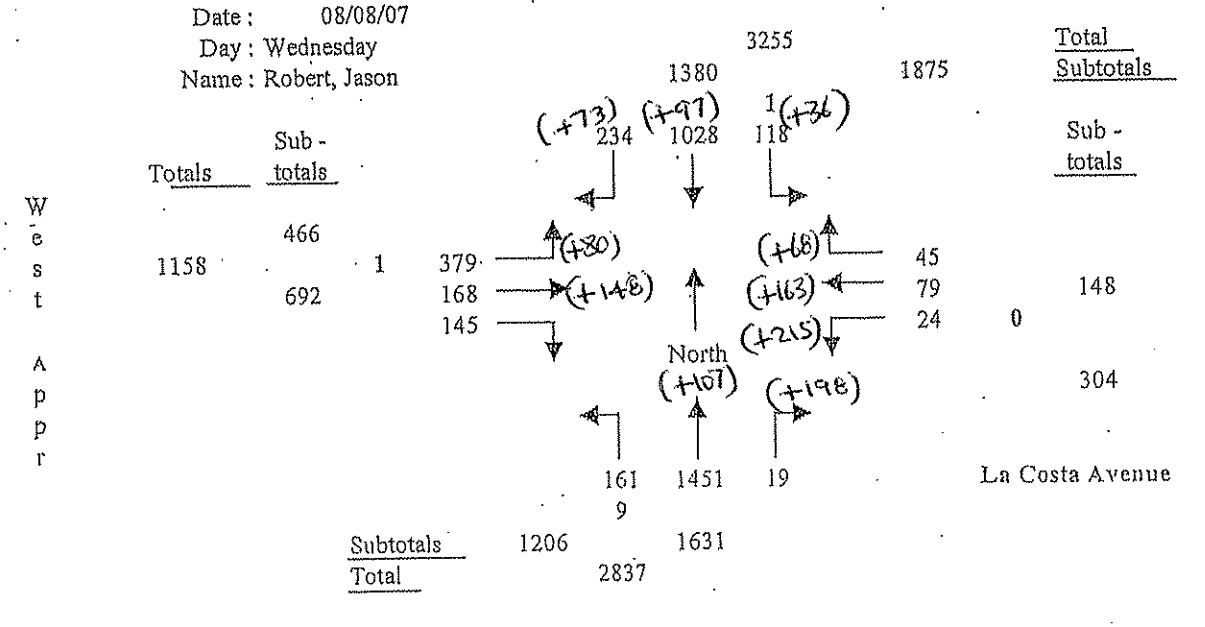

Note : Left-turn volumes include U-turns. U-turns in bold.

1A-A
EX.
(+PROJECT)

Rancho Santa Fe Road at Camino De Los Coches

Lane Configuration for Intersection Capacity Utilization

Pk. Hr. Time Period : 7:15 AM to 8:15 AM		South Appr (NB)			North Appr (SB)			West Appr (EB)			East Appr (WB)		
		Left	Thru	Right	Left	Thru	Right	Left	Thru	Right	Left	Thru	Right
Lane Config-urations	Inside (left) 1		1		1						1		
	2		1			1					1		
	3		1	1		1							1
	4					1							
	5												
	6												
	Outside 7												
	Free-flow												
Lane Settings		0	3	0	1	3	0	0	0	0	2	0	1
Capacity		0	6000	0	1800	6000	0	0	0	0	3600	0	1800
Are the North/South phases split (Y/N)?				N									
Are the East/West phases split (Y/N)?				N									
Efficiency Lost Factor		0.10	(+181)			(+123)							
Hourly Volume		0	574	179	81	1657	0	0	0	0	298	0	64
Adjusted Hourly Volume		0	753	0	81	1657	0	0	0	0	298	0	64
Utilization Factor		0.00	0.13	0.00	0.05	0.28	0.00	0.00	0.00	0.00	0.08	0.00	0.04
Critical Factors		0.00	(0.15)			0.28			0.00	0.00	0.08		
						(0.30)							

ICU Ratio = 0.46 (0.48) LOS = A (A)

Turning Movements at Intersection of : **Rancho Santa Fe Road and Camino De Los Coches.**

Time : 7:15 AM
to 8:15 AM
Date : 07/19/06
Day : Wednesday
Name : Matt, Tyler

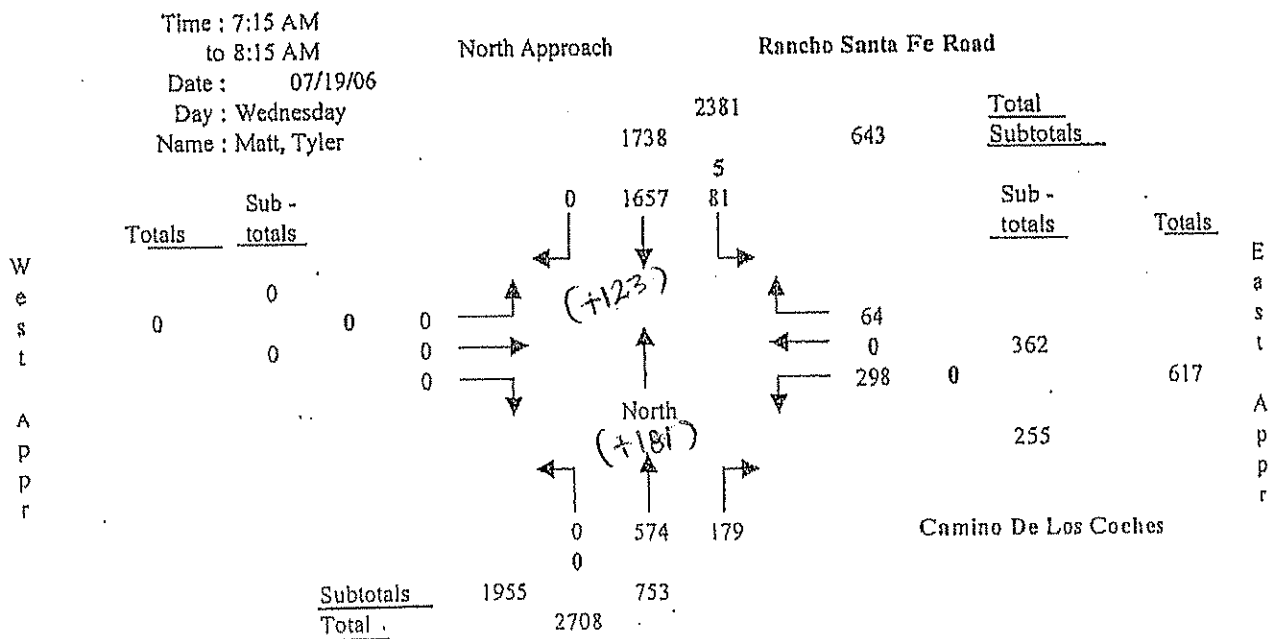

Note : Left-turn volumes include U-turns. U-turns in bold.

1A-P
EX.
(+PROJECT)

Rancho Santa Fe Road at Camino De Los Coches

Lane Configuration for Intersection Capacity Utilization

Pk. Hr. Time Period : 5:00 PM to 6:00 PM

		South Appr (NB)			North Appr (SB)			West Appr (EB)			East Appr (WB)		
		Left	Thru	Right	Left	Thru	Right	Left	Thru	Right	Left	Thru	Right
Lane Config-urations	Inside (left) 1		1		1						1		
	2		1			1					1		
	3		1	1		1							1
	4					1							
	5												
	6												
	Outside 7												
	Free-flow												
Lane Settings		0	3	0	1	3	0	0	0	0	2	0	1
Capacity		0	6000	0	1800	6000	0	0	0	0	3600	0	1800
Are the North/South phases split (Y/N)?				N									
Are the East/West phases split (Y/N)?				N									
Efficiency Lost Factor		0.10											
Hourly Volume		0	(+305) 1472	191	73	(+312) 904	0	0	0	0	112	0	151
Adjusted Hourly Volume		0	1663	0	73	904	0	0	0	0	112	0	151
Utilization Factor		0.00	0.28	0.00	0.04	0.15	0.00	0.00	0.00	0.00	0.03	0.00	0.08
Critical Factors			0.28 (0.33)		0.04 (0.21)			0.00					0.08

ICU Ratio = 0.50 (0.55) LOS = A (A)

Turning Movements at Intersection of : **Rancho Santa Fe Road and Camino De Los Coches**

Time : 5:00 PM to 6:00 PM
Date : 07/19/06
Day : Wednesday
Name : Matt, Tyler

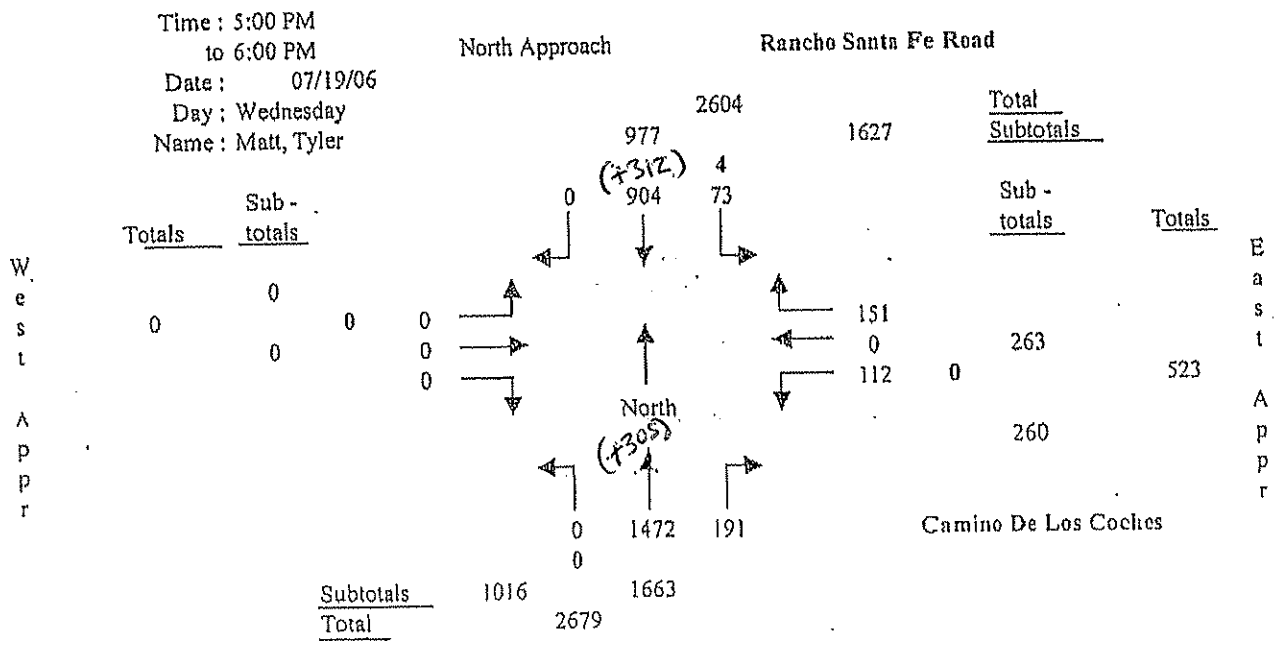

Note : Left-turn volumes include U-turns. U-turns in bold.

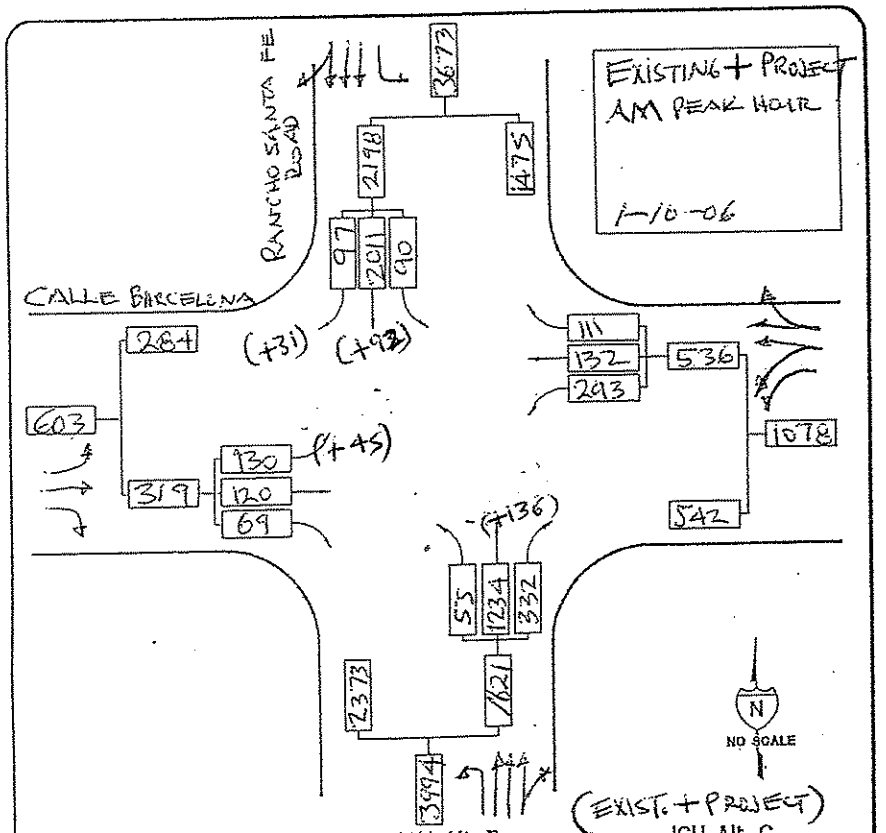

ICU Alt. A			ICU Alt. B			ICU Alt. C		
MOVE	CAPACITY	ICU	MOVE	CAPACITY	ICU	MOVE	CAPACITY	ICU
	2011+97 / 6000	0.35					2233 / 6000	0.37
	55 / 1800	0.03				NC	NC	0.03
	130 / 1800	0.07					175 / 1800	0.09
	536 / 5400	0.10				NC	NC	0.10
	+	0.10					+	0.10
		0.65						0.69

L.O.S. ____ No mitigation — LOS B

L.O.S. ____ Mitigation

L.O.S. ____ Mitigation — LOS B

NC = No Change

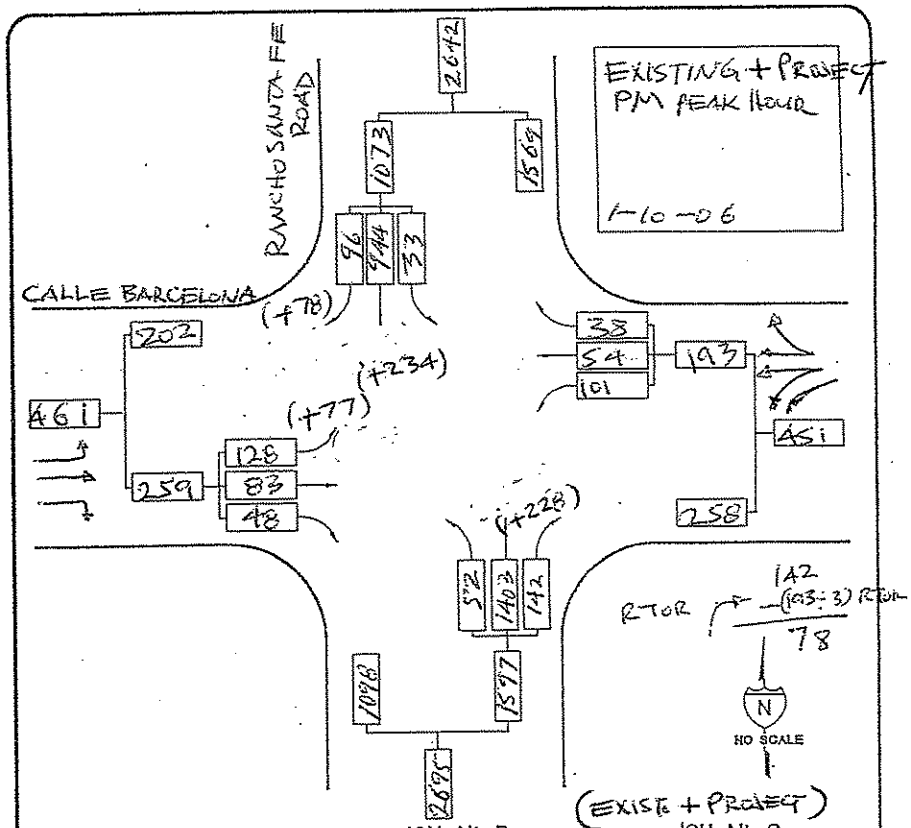

ICU Alt. A			ICU Alt. B			ICU Alt. C		
MOVE	CAPACITY	ICU	MOVE	CAPACITY	ICU	MOVE	CAPACITY	ICU
	33 / 1800	0.02					NC	0.02
	1403+78 / 6000	0.25					1709 / 6000	0.28
	128 / 1800	0.07					205 / 1800	0.11
	193 / 5400	0.04				NC	NC	0.04
	+	0.10					+	0.10
		0.48						0.55

L.O.S. ____ No mitigation — LOS A

L.O.S. ____ Mitigation

L.O.S. ____ Mitigation — LOS A

PAGE OF

15 A+P
EX + PROJECT

MS

URBAN SYSTEMS

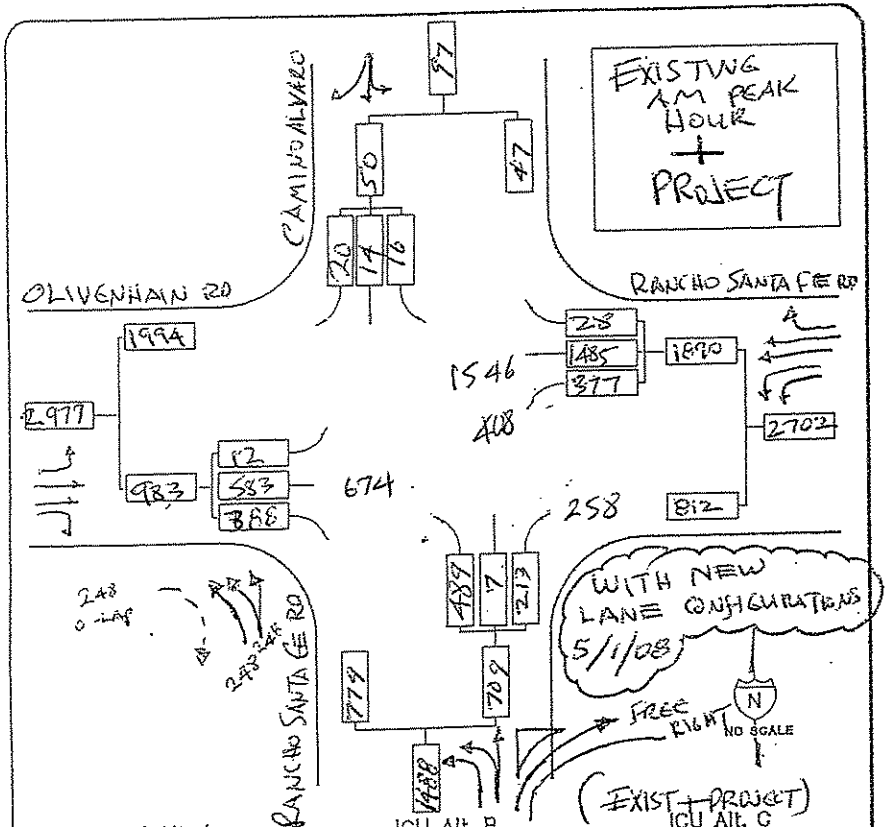

ICU Alt. A			ICU Alt. B			ICU Alt. C		
MOVE	CAPACITY	ICU	MOVE	CAPACITY	ICU	MOVE	CAPACITY	ICU
	583/4000	0.15		1485/4000	0.37		1546/4000	0.39
	377/3600	0.10		12/1800	0.01		12/1800	0.01
	50/1800	0.03			.03		50/1800	0.03
	496/3600	0.14			0.14		496/3600	0.14
LOST TIME +		0.10			0.10		LOST TIME	+0.10
		0.52			0.65			0.67

L.O.S. ____ No mitigation — LOS A

L.O.S. ____ Mitigation — LOS B

L.O.S. ____ Mitigation — LOS B

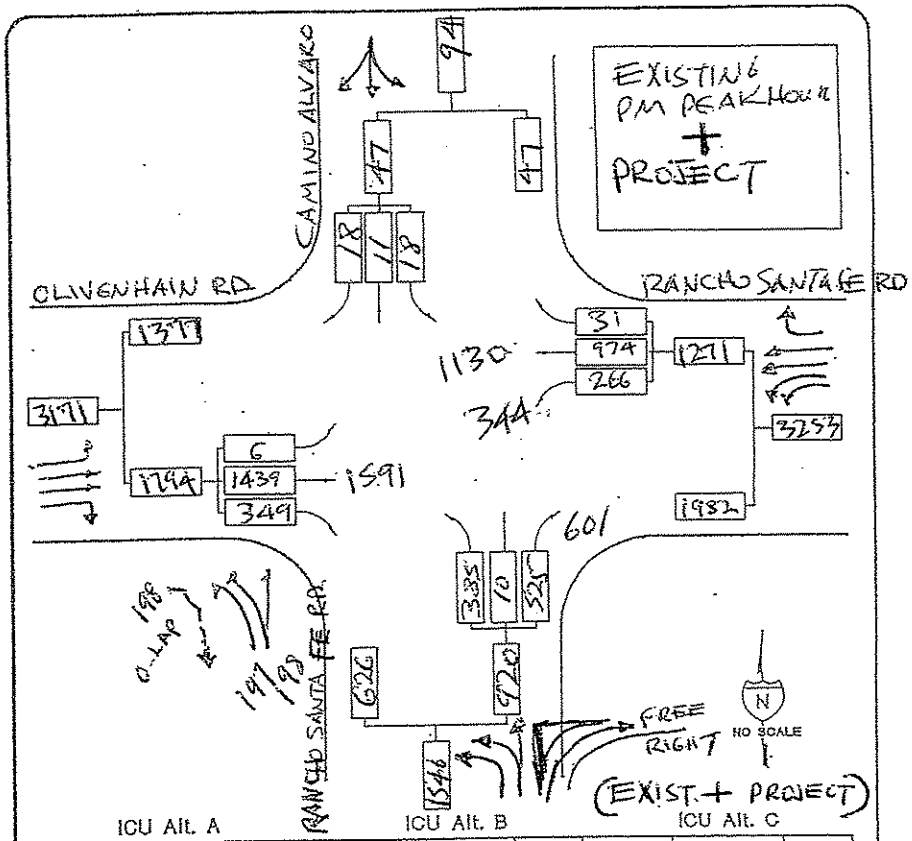

ICU Alt. A			ICU Alt. B			ICU Alt. C		
MOVE	CAPACITY	ICU	MOVE	CAPACITY	ICU	MOVE	CAPACITY	ICU
	1439/4000	0.36					1591/4000	0.40
	266/3600	0.07					344/3600	0.10
	47/1800	0.03					47/1800	0.03
	395/3600	0.11					395/3600	0.11
		+0.10					+	0.10
		0.67						0.74

L.O.S. ____ No mitigation — LOS B

L.O.S. ____ Mitigation

L.O.S. ____ Mitigation — LOS C

PAGE OF

16 A+P EX.+PROJ.

URBAN SYSTEMS

18-A
EXIST.+ PROJECT

El Camino Real at Alga Road/Aviara Parkway

Lane Configuration for Intersection Capacity Utilization

Pk. Hr. Time Period : 7:45 AM to 8:45 AM		South Appr (NB)			North Appr (SB)			West Appr (EB)			East Appr (WB)		
		Left	Thru	Right	Left	Thru	Right	Left	Thru	Right	Left	Thru	Right
Lane Config-urations	Inside (left) 1	1			1			1			1		
	2	1			1			1			1		
	3		1			1			1			1	
	4		1			1			1			1	1
	5		1			1	1			1			
	6			1									
	Outside 7												
	Free-flow												
Lane Settings		2	3	1	2	3	0	2	2	1	2	2	0
Capacity		3600	6000	1800	3600	6000	0	3600	4000	1800	3600	4000	0
Are the North/South phases split (Y/N)?				N									
Are the East/West phases split (Y/N)?				N									
Efficiency Lost Factor		0.10	(+10)	(+5)		(+15)				(+8)	(+8)		
Hourly Volume		(+5) 153	899	242	74	1077	61	78	177	396	719	369	108
Adjusted Hourly Volume		153	899	242	74	1138	0	78	177	396	719	477	0
Utilization Factor		0.04	0.15	0.13	0.02	0.19	0.00	0.02	0.04	0.22	0.20	0.12	0.00
Critical Factors		0.04 ✓				0.19 ✓				0.22 ✓	0.20 ✓		

ICU Ratio = 0.75 ✓ LOS = C ✓

(LOS = C)

Turning Movements at Intersection of : **El Camino Real and Alga Road/Aviara Parkway**

Time : 7:45 AM
to 8:45 AM
Date : 08/09/07
Day : Thursday
Name : Raul, Alfonso

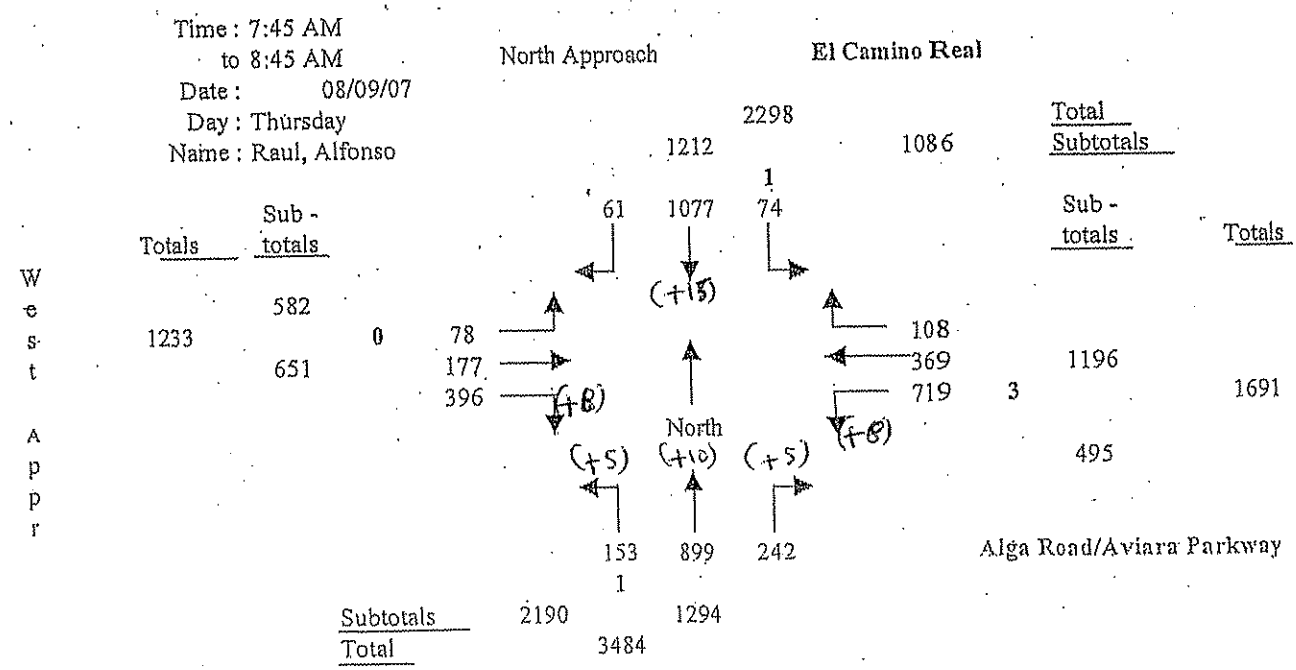

Note : Left-turn volumes include U-turns. U-turns in bold.

18-P
EXIST.+PROJECT

El Camino Real at Alga Road/Aviara Parkway

Lane Configuration for Intersection Capacity Utilization

Pk. Hr. Time Period : 4:45 PM to 5:45 PM		South Appr (NB)			North Appr (SB)			West Appr (EB)			East Appr (WB)		
		Left	Thru	Right	Left	Thru	Right	Left	Thru	Right	Left	Thru	Right
Lane Config-urations	Inside (left) 1	1			1			1			1		
	2	1			1			1			1		
	3		1			1			1			1	
	4		1			1			1			1	1
	5		1			1	1			1			
	6			1									
	Outside 7												
	Free-flow												
Lane Settings		2	3	1	2	3	0	2	2	1	2	2	0
Capacity		3600	6000	1800	3600	6000	0	3600	4000	1800	3600	4000	0
Are the North/South phases split (Y/N)?				N									
Are the East/West phases split (Y/N)?				N									
Efficiency Lost Factor		0.10											
Hourly Volume		(+13) 438	(+27) 1056	(+13) 680	203	(+25) 1321	104	121	492	(+13) 472	(+13) 508	398	58
Adjusted Hourly Volume		438	1056	172	203	1425	0	121	492	34	508	456	0
Utilization Factor		0.12	0.18	0.10	0.06	0.24	0.00	0.03	0.12	0.02	0.14	0.11	0.00
Critical Factors		0.12 (0.13)				0.24 (0.24)			0.12		0.14 (0.15)		

ICU Ratio = 0.72 (0.74) LOS = C (LOS = C)

Turning Movements at Intersection of : **El Camino Real and Alga Road/Aviara Parkway**

Time : 4:45 PM
to 5:45 PM
Date : 08/09/07
Day : Thursday
Name : Raul, Alfonso

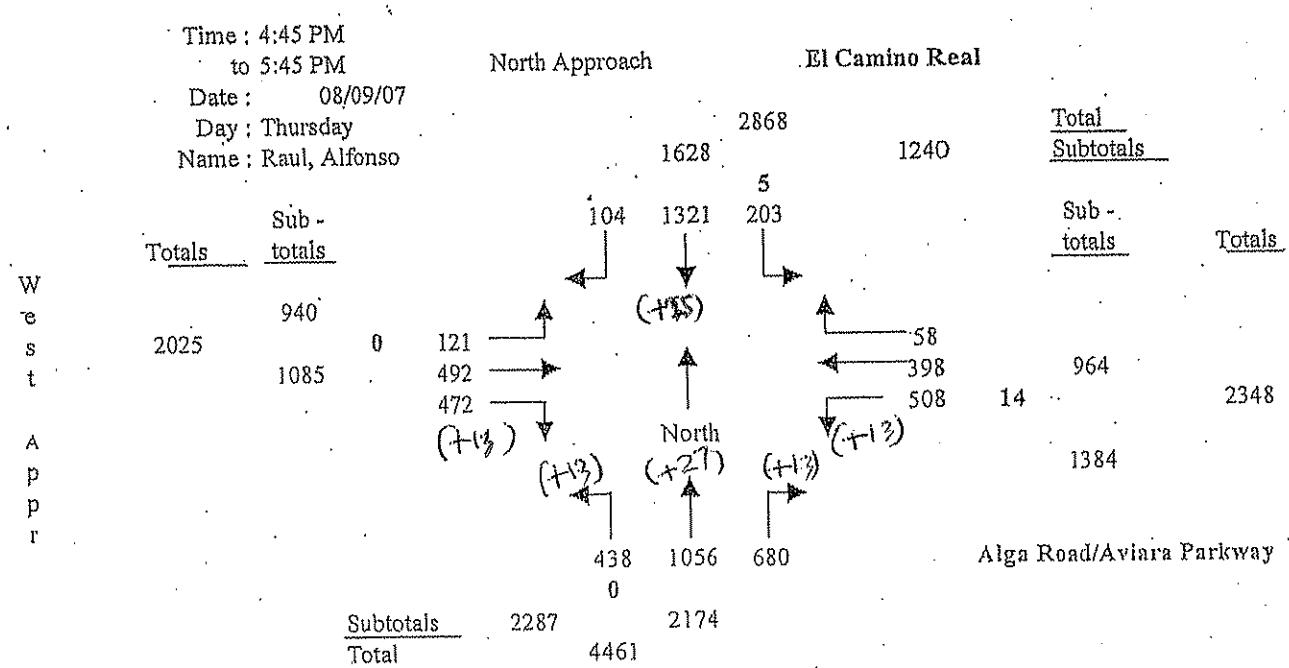

Note : Left-turn volumes include U-turns. U-turns in bold.

Intersection Capacity Utilization (ICU) Worksheet

NTERSECTION CAPACITY UTILIZATION

NTERSECTION: El Camino Real (N/S) Costa Del Mar Rd (E/W)
CENARIO : Existing
OUNT DATE: 1/12/06 PEAK HR: AM
NALYST : MTM AGENCY : Willdan

(+PROJECT)

MOVEMENT	# OF LANES	CAPACITY	AM PEAK HOUR	UNADJUSTED VOLUME	AM PEAK V/C	
NB Left	0	0	0	0.00	0.00	*
NB Thru +RT	3	6,000	1,342 +248	(+20) 0.26	0.22 0.26	
NB Right	0	—	218		—	
SB Left	1	1,800	79		0.04	
SB Thru	2	4,000	1,919	(+31) 0.49	0.48	*
SB Right	0	0	0		0	
EB Left	0	0	0		0.00	
EB Thru	0	0	0		0	*
EB Right	0	0	0		0	
WB Left	2	3,600	71	0.02	0.02	*
WB Thru	0	0	0		0	
WB Right	1	1,800	6		0.00	
NORTH/SOUTH CRITICAL SUMS				0.49	0.48	
EAST/WEST CRITICAL SUMS				0.02	0.02	
SUM OF CRITICAL V/C RATIO				0.51	0.50	
ADJUSTMENT FOR LOST TIME				0.10	0.10	
INTERSECTION CAPACITY UTILIZATION (ICU)				0.61	~~0.60~~	
LEVEL OF SERVICE (LOS)				B	~~A~~	

NOTES:

* Denotes Critical Movements
** Extra wide outside lane

LOS	Maximum V/C
A	≤ 0.60
B	≤ 0.70
C	≤ 0.80
D	≤ 0.90
E	≤ 1.00
F	>1.00

INTERSECTION CAPACITY UTILIZATION

INTERSECTION: El Camino Real (N/S) Costa Del Mar Rd (E/W)
SCENARIO : Existing
COUNT DATE: 1/12/06 PEAK HR: PM
ANALYST : MTM AGENCY : Willdan

+PROJECT

MOVEMENT	# OF LANES	CAPACITY	PM PEAK HOUR	UNADJUSTED VOLUME	PM PEAK V/C	
NB Left	0	0	0	0.00	0.00	*
NB Thru +RT	3	6,000	2,091 +49	(+53) 0.37	0.35 0.36	
NB Right	0	—	49		—	
SB Left	1	1,800	13		0.01	
SB Thru	2	4,000	2,049	(+51) 0.53	0.51	*
SB Right	0	0	0		0	
EB Left	0	0	0		0.00	
EB Thru	0	0	0		0	*
EB Right	0	0	0		0	
WB Left	2	3,600	116		0.03	*
WB Thru	0	0	0		0	
WB Right	1	1,800	60		0.03	
NORTH/SOUTH CRITICAL SUMS				0.53	0.51	
EAST/WEST CRITICAL SUMS				0.03	0.03	
SUM OF CRITICAL V/C RATIO				0.56	0.54	
ADJUSTMENT FOR LOST TIME				0.10	0.10	
INTERSECTION CAPACITY UTILIZATION (ICU)				0.66	~~0.61~~	
LEVEL OF SERVICE (LOS)				B	~~B~~	

NOTES:

* Denotes Critical Movements
** Extra wide outside lane

LOS	Maximum V/C
A	≤ 0.60
B	≤ 0.70
C	≤ 0.80
D	≤ 0.90
E	≤ 1.00
F	>1.00

(+PROJECT)

19 AM
EX

Date Printed: 2/12/2006
Page 1 of 1

20-A

EXIST. + PROJECT

I-5 Southbound Ramps at La Costa Avenue

Lane Configuration for Intersection Capacity Utilization

Pk. Hr. Time Period : 7:45 AM to 8:45 AM

		South Appr (NB)			North Appr (SB)			West Appr (EB)			East Appr (WB)		
		Left	Thru	Right	Left	Thru	Right	Left	Thru	Right	Left	Thru	Right
Lane Config-urations	Inside (left) 1				1				1		1		
	2				1	1			1	1	1		
	3						1					1	
	4											1	
	5												
	6												
	Outside 7												
	Free-flow												
Lane Settings		0	0	0	2	0	1	0	2	0	2	2	0
Capacity		0	0	0	3800	0	1800	0	4000	0	3600	4000	0
Are the North/South phases split (Y/N)?				N									
Are the East/West phases split (Y/N)?				N									
Efficiency Lost Factor		0.10			(+13)						(+15)		
Hourly Volume		0	0	0	712	13	506	0	441	38	215	353	0
Adjusted Hourly Volume		0	0	0	725	0	506	0	479	0	215	353	0
Utilization Factor		0.00	0.00	0.00	0.19	0.00	0.28	0.00	0.12	0.00	0.06	0.09	0.00
Critical Factors		0.00					0.28		0.12		0.06		
											(0.06)		

ICU Ratio = 0.56 LOS = A

(LOS = A)

Turning Movements at Intersection of : **I-5 Southbound Ramps and La Costa Avenue**

Time : 7:45 AM to 8:45 AM
Date : 07/17/07
Day : Tuesday
Name : Stephen, Jason

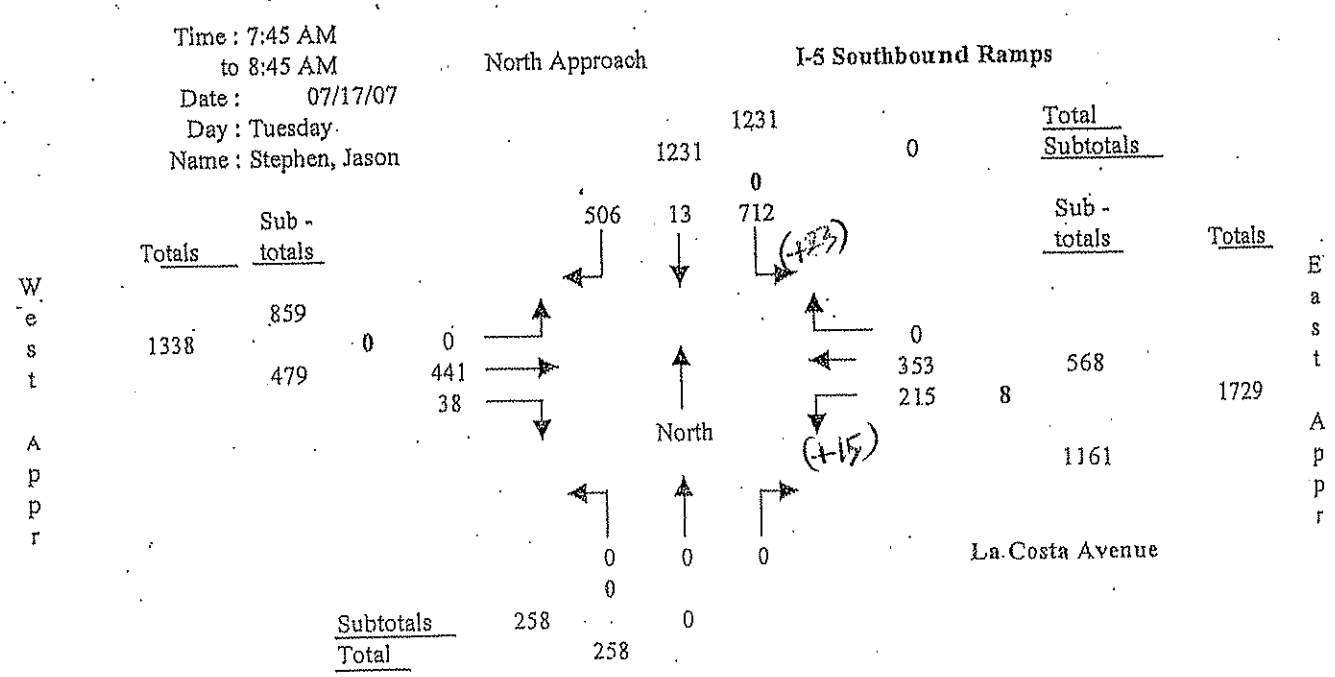

Note : Left-turn volumes include U-turns. U-turns in bold.

20-P
EXIST. + PROJECT

I-5 Southbound Ramps at La Costa Avenue

Lane Configuration for Intersection Capacity Utilization

Pk. Hr. Time Period : 3:30 PM to 4:30 PM		South Appr (NB)			North Appr (SB)			West Appr (EB)			East Appr (WB)		
		Left	Thru	Right	Left	Thru	Right	Left	Thru	Right	Left	Thru	Right
Lane Config - urations	Inside (left) 1				1				1		1		
	2				1	1			1	1	1		
	3						1					1	
	4											1	
	5												
	6												
	Outside 7												
	Free-flow												
Lane Settings		0	1	0	2	0	1	0	2	0	2	2	0
Capacity		0	2000	0	3800	0	1800	0	4000	0	3600	4000	0
Are the North/South phases split (Y/N)?				N									
Are the East/West phases split (Y/N)?				N									
Efficiency Lost Factor		0.10											
Hourly Volume		0	0	0	495 (+39)	16	303	0	588	59	397 (+40)	408	0
Adjusted Hourly Volume		0	0	0	511	0	303	0	647	0	397	408	0
Utilization Factor		0.00	0.00	0.00	0.13	0.00	0.17	0.00	0.16	0.00	0.11	0.10	0.00
Critical Factors		0.00 ✓					0.17 ✓		0.16 ✓		0.11 (0.12)		

ICU Ratio = 0.54 (0.55) LOS = A (LOS = A)

Turning Movements at Intersection of : **I-5 Southbound Ramps and La Costa Avenue**

Time : 3:30 PM
to 4:30 PM
Date : 07/17/07
Day : Tuesday
Name : Stephen, Jason

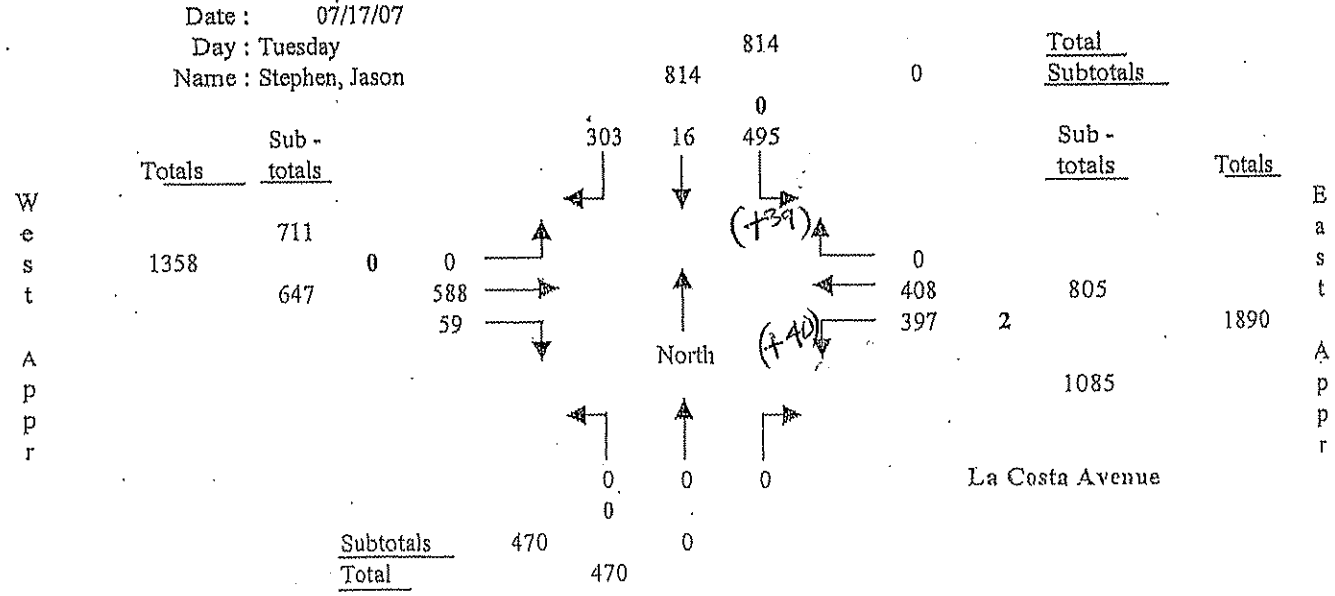

Note : Left-turn volumes include U-turns. U-turns in bold.

21-A

EXIST + PROJECT

I-5 Northbound Ramps at La Costa Avenue

Lane Configuration for Intersection Capacity Utilization

Pk. Hr. Time Period : 7:30 AM to 8:30 AM		South Appr (NB)			North Appr (SB)			West Appr (EB)			East Appr (WB)		
		Left	Thru	Right	Left	Thru	Right	Left	Thru	Right	Left	Thru	Right
Lane Config-urations	Inside (left) 1	1	1					1				1	
	2			1					1			1	
	3			1					1			1	
	4												1
	5												
	6												
	Outside 7												
	Free-flow												
Lane Settings		0	1	2	0	0	0	1	2	0	0	3	1
Capacity		0	2000	3600	0	0	0	1800	4000	0	0	6000	1800
Are the North/South phases split (Y/N)?				N									
Are the East/West phases split (Y/N)?				N									
Efficiency Lost Factor		0.10		(+22)					(+22)			(+15)	(+15)
Hourly Volume		67	2	608	0	0	0	179	1022	0	0	615	505
Adjusted Hourly Volume		0	69	608	0	0	0	179	1022	0	0	615	505
Utilization Factor		0.00	0.03	0.17	0.00	0.00	0.00	0.10	0.26	0.00	0.00	0.10	0.28
Critical Factors				0.17	0.00			0.10					0.28
				(0.17)									(0.29)

ICU Ratio = 0.65 LOS = B

(0.66) (LOS = B)

Turning Movements at Intersection of : **I-5 Northbound Ramps and La Costa Avenue**

Time : 7:30 AM
to 8:30 AM
Date : 07/17/07
Day : Tuesday
Name : Raul, Alfonso

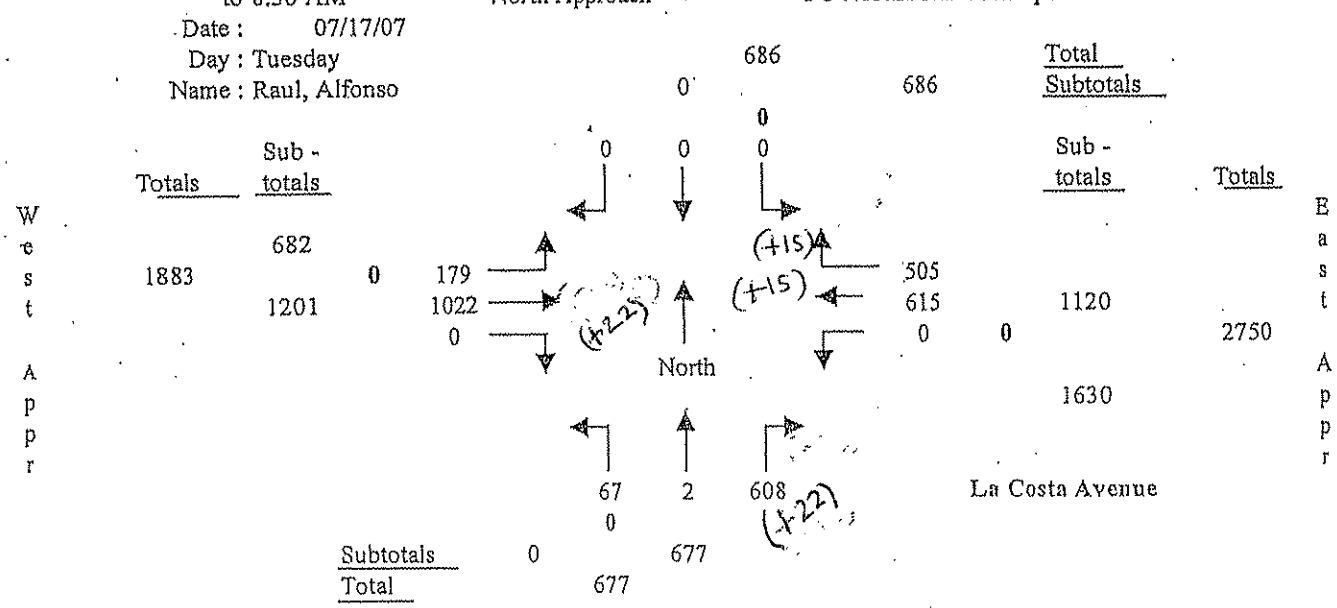

Note : Left-turn volumes include U-turns. U-turns in bold.

21- P
EXIST. + PROJECT

I-5 Northbound Ramps at La Costa Avenue

Lane Configuration for Intersection Capacity Utilization

Pk. Hr. Time Period : 5:15 PM to 6:15 PM		South Appr (NB)			North Appr (SB)			West Appr (EB)			East Appr (WB)		
		Left	Thru	Right	Left	Thru	Right	Left	Thru	Right	Left	Thru	Right
Lane Config-urations	Inside (left) 1	1	1					1				1	
	2			1					1			1	
	3			1					1			1	
	4												1
	5												
	6												
	Outside Free-flow 7												
Lane Settings		0	1	2	0	0	0	1	2	0	0	3	1
Capacity		0	2000	3600	0	0	0	1800	4000	0	0	6000	1800
Are the North/South phases split (Y/N)?				N									
Are the East/West phases split (Y/N)?				N									
Efficiency Lost Factor		0.10		(+39)					(+39)			(+40)	(+39)
Hourly Volume		172	2	792	0	0	0	196	789	0	0	753	392
Adjusted Hourly Volume		0	174	792	0	0	0	196	789	0	0	753	392
Utilization Factor		0.00	0.09	0.22	0.00	0.00	0.00	0.11	0.20	0.00	0.00	0.13	0.22
Critical Factors				0.22	0.00			0.11					0.22
				(0.23)									(0.24)

ICU Ratio = 0.65 (0.68) LOS = B (LOS = B)

Turning Movements at Intersection of : **I-5 Northbound Ramps and La Costa Avenue**

Time : 5:15 PM
to 6:15 PM
Date : 07/17/07
Day : Tuesday
Name : Raul, Alfonso

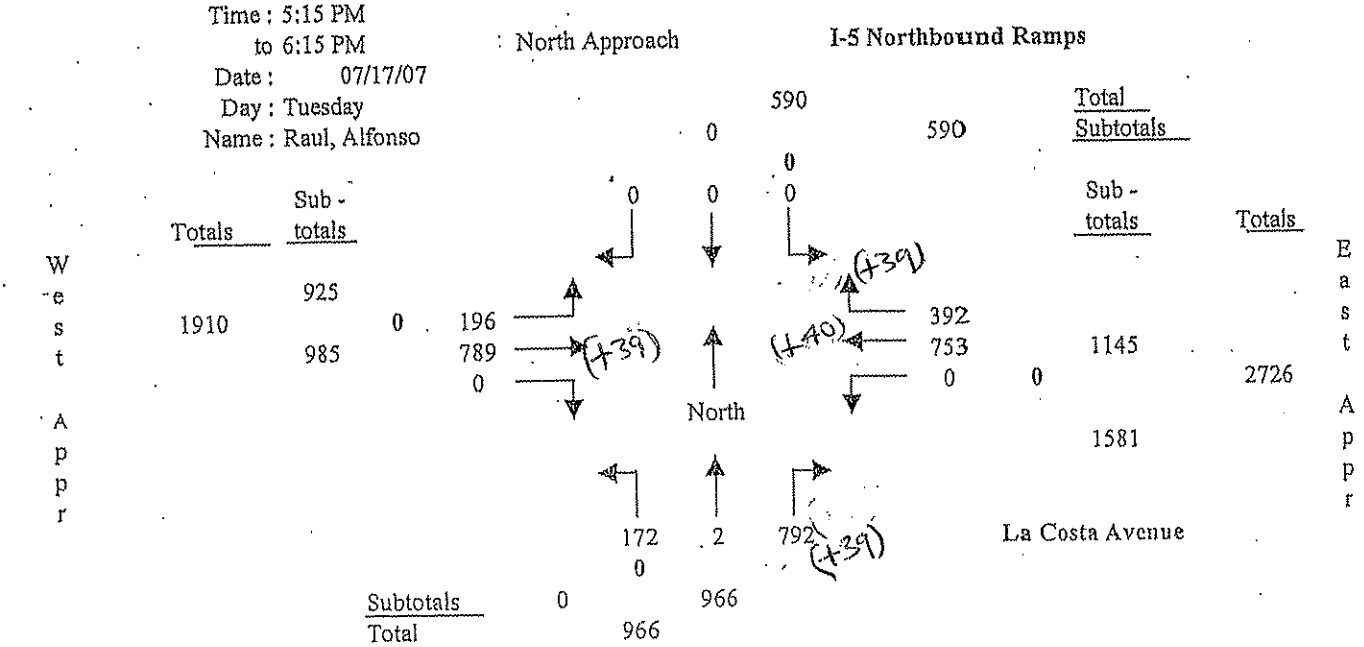

Note : Left-turn volumes include U-turns. U-turns in bold.

Intersection Capacity Utilization (ICU) Worksheet

NTERSECTION CAPACITY UTILIZATION

NTERSECTION: Piraeus Ave (N/S) La Costa Ave (E/W)
CENARIO : Existing
COUNT DATE: PEAK HR: AM
NALYST : MTM AGENCY : Willdan

MOVEMENT	# OF LANES	CAPACITY	AM PEAK HOUR	~~UNADJUSTED~~ (+PROJECT) VOLUME	AM PEAK V/C	
NB Left	1	1,800	109	0.06	0.06	*
NB Thru	0	0	0		0.00	
NB Right	1	1,800	62		0.03	
SB Left	0	0	0		0	
SB Thru	0	0	0	0.00	0.00	*
SB Right	0	0	0		0	
EB Left	0	0	0		0.00	
EB Thru +RT	2	4,000	1,381+197	(+44) 0.41	0.39	*
EB Right	Ø	—	197		—	
WB Left	1	1,800	74	0.04	0.04	*
WB Thru	4	8,000	1,076	(+30) 0.14	0.13	
WB Right	0	0	0		0.00	
NORTH/SOUTH CRITICAL SUMS				0.06	0.06	
EAST/WEST CRITICAL SUMS				0.44	0.43	
SUM OF CRITICAL V/C RATIO				0.50	0.49	
ADJUSTMENT FOR LOST TIME				0.10	0.10	
INTERSECTION CAPACITY UTILIZATION (ICU)				0.61	0.59	
LEVEL OF SERVICE (LOS)				A	A	

NOTES:

* Denotes Critical Movements
** Extra wide outside lane

LOS	Maximum V/C
A	≤0.60
B	≤0.70
C	≤0.80
D	≤0.90
E	≤1.00
F	>1.00

INTERSECTION CAPACITY UTILIZATION

INTERSECTION: Piraeus Ave (N/S) La Costa Ave (E/W)
SCENARIO : Existing
COUNT DATE: PEAK HR: PM
ANALYST : MTM AGENCY : Willdan

MOVEMENT	# OF LANES	CAPACITY	PM PEAK HOUR	~~UNADJUSTED~~ +PROJECT VOLUME	PM PEAK V/C	
NB Left	1	1,800	105	0.06	0.06	*
NB Thru	0	0	0		0.00	
NB Right	1	1,800	29		0.02	
SB Left	0	0	0		0	
SB Thru	0	0	0	0.00	0.00	*
SB Right	0	0	0		0	
EB Left	0	0	0		0.00	
EB Thru +RT	2	4,000	1,845+57	(+78) 0.50	0.47	*
EB Right	Ø	—	52		—	
WB Left	1	1,800	80	0.04	0.04	*
WB Thru	4	8,000	1,704	(+79) 0.22	0.21	
WB Right	0	0	0		0.00	
NORTH/SOUTH CRITICAL SUMS				0.06	0.06	
EAST/WEST CRITICAL SUMS				0.53	0.51	
SUM OF CRITICAL V/C RATIO				0.59	0.57	
ADJUSTMENT FOR LOST TIME				0.10	0.10	
INTERSECTION CAPACITY UTILIZATION (ICU)				0.70	0.67	
LEVEL OF SERVICE (LOS)				B	B	

NOTES:

* Denotes Critical Movements
** Extra wide outside lane

LOS	Maximum V/C
A	≤0.60
B	≤0.70
C	≤0.80
D	≤0.90
E	≤1.00
F	>1.00

(+PROJECT) 22 AM EX

Date Printed: 2/12/2000
Page 1 of 1

: Piraeus @ La Costa
xisting

Intersection Capacity Utilization (ICU) Worksheet

ITERSECTION CAPACITY UTILIZATION

ITERSECTION: Saxony Rd (N/S) La Costa Ave (E/W)
CENARIO : Existing
OUNT DATE: Tue 08/05/03 PEAK HR: AM
NALYST : MTM AGENCY : Willdan

MOVEMENT	# OF LANES	CAPACITY	AM PEAK HOUR	+ PROJECT ~~UNADJUSTED~~ VOLUME	AM PEAK V/C	
B Left	1	1,800	48	0.03	0.03	*
B Thru	0	0	0		0.00	
B Right	1	1,800	52		0.03	
B Left	0	0	0		0	
B Thru	0	0	0	0.00	0.00	*
B Right	0	0	0		0	
B Left	0	0	0		0.00	
B Thru + RT	2	4,000	1,025 +76 (+44)	0.29	~~0.26~~ .28	*
B Right	~~0~~	—	76		~~—~~	
/B Left	1	1,800	106	0.06	0.06	*
/B Thru	2	4,000	1,176	(+30) 0.30	0.29	
/B Right	0	0	0		0.00	
IORTH/SOUTH CRITICAL SUMS				0.03	0.03	
AST/WEST CRITICAL SUMS				0.34	~~0.32~~ .34	
UM OF CRITICAL V/C RATIO				0.37	~~0.35~~ .37	
DJUSTMENT FOR LOST TIME				0.10	0.10	
NTERSECTION CAPACITY UTILIZATION (ICU)				0.48	~~0.45~~ .47	
EVEL OF SERVICE (LOS)				A	A	

IOTES:

LOS	Maximum V/C
A	≤0.60
B	≤0.70
C	≤0.80
D	≤0.90
E	≤1.00
F	>1.00

Denotes Critical Movements
* Extra wide outside lane

INTERSECTION CAPACITY UTILIZATION

INTERSECTION: Saxony Rd (N/S) La Costa Ave (E/W)
SCENARIO : Existing
COUNT DATE: Tue 08/05/03 PEAK HR: PM
ANALYST : MTM AGENCY : Willdan

MOVEMENT	# OF LANES	CAPACITY	PM PEAK HOUR	+ PROJECT ~~UNADJUSTED~~ VOLUME	PM PEAK V/C	
NB Left	1	1,800	46	0.03	0.03	*
NB Thru	0	0	0		0.00	
NB Right	1	1,800	98		0.05	
SB Left	0	0	0		0	
SB Thru	0	0	0	0.00	0.00	*
SB Right	0	0	0		0	
EB Left	0	0	0		0.00	
EB Thru + RT	2	4,000	1,397 +84 (+78)	0.39	~~0.35~~ .37	*
EB Right	~~0~~	—	84		~~—~~	
WB Left	1	1,800	77		0.04	*
WB Thru	2	4,000	1,069	(+19) 0.29	0.27	
WB Right	0	0	0		0.00	
NORTH/SOUTH CRITICAL SUMS				0.03	0.03	
EAST/WEST CRITICAL SUMS				0.43	~~0.39~~ 0.41	
SUM OF CRITICAL V/C RATIO				0.46	~~0.42~~ .44	
ADJUSTMENT FOR LOST TIME				0.10	0.10	
INTERSECTION CAPACITY UTILIZATION (ICU)				0.56	~~0.52~~ .54	
LEVEL OF SERVICE (LOS)				A	A	

NOTES:

LOS	Maximum V/C
A	≤0.60
B	≤0.70
C	≤0.80
D	≤0.90
E	≤1.00
F	>1.00

* Denotes Critical Movements
** Extra wide outside lane

(+PROJECT) 23 A+P EX

24-A
EXIST+PROJECT

El Camino Real at La Costa Avenue

Lane Configuration for Intersection Capacity Utilization

Pk. Hr. Time Period : 7:45 AM to 8:45 AM		South Appr (NB)			North Appr (SB)			West Appr (EB)			East Appr (WB)		
		Left	Thru	Right	Left	Thru	Right	Left	Thru	Right	Left	Thru	Right
Lane Configurations	Inside (left) 1	1			1			1			1		
	2	1			1			1				1	
	3		1			1			1			1	
	4		1			1			1				1
	5		1	1		1				1			
	6						1						
	Outside Free-flow 7												
Lane Settings		2	3	0	2	3	1	2	2	1	1	2	1
Capacity		3600	6000	0	3600	6000	1800	3600	4000	1800	1800	4000	1800
Are the North/South phases split (Y/N)?				N									
Are the East/West phases split (Y/N)?				N									
Efficiency Lost Factor		0.10			(+31)				(+44)			(+30)	(+20)
Hourly Volume		214	655	25	55	1188	469	578	256	320	132	494	172
Adjusted Hourly Volume		214	680	0	55	1188	469	578	256	320	132	494	172
Utilization Factor		0.06	0.11	0.00	0.02	0.20	0.26	0.16	0.06	0.18	0.07	0.12	0.10
Critical Factors		0.06 ✓					0.26 ✓	0.16 ✓				0.12 (0.13) ✓	

ICU Ratio = 0.70 (0.71) LOS = B (LOS = C)

Turning Movements at Intersection of : **El Camino Real and La Costa Avenue**

Time : 7:45 AM
to 8:45 AM
Date : 08/07/07
Day : Tuesday
Name : Rob, David

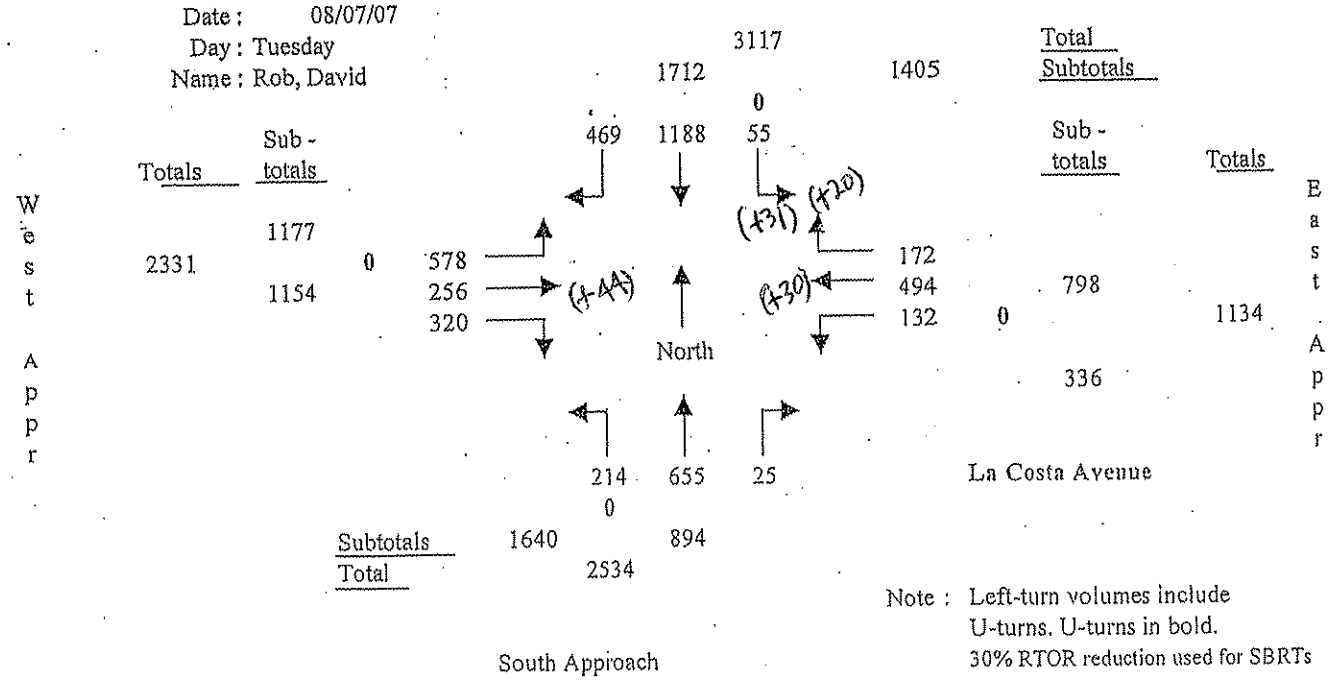

Note : Left-turn volumes include U-turns. U-turns in bold.
30% RTOR reduction used for SBRTs

24-P
EXIST.+PROJECT

El Camino Real at La Costa Avenue

Lane Configuration for Intersection Capacity Utilization

Pk. Hr. Time Period : 5:00 PM to 6:00 PM		South Appr (NB)			North Appr (SB)			West Appr (EB)			East Appr (WB)		
		Left	Thru	Right	Left	Thru	Right	Left	Thru	Right	Left	Thru	Right
Lane Config-urations	Inside (left) 1	1			1			1			1		
	2	1			1			1				1	
	3		1			1			1			1	
	4		1			1			1				1
	5		1	1		1				1			
	6						1						
	Outside 7												
	Free-flow												
Lane Settings		2	3	0	2	3	1	2	2	1	1	2	1
Capacity		3600	6000	0	3600	6000	1800	3600	4000	1800	1800	4000	1800
Are the North/South phases split (Y/N)?				N									
Are the East/West phases split (Y/N)?				N									
Efficiency Lost Factor		0.10			(+51)			(+78)			(+79)	(+53)	
Hourly Volume		282	1200	62	192	1313	529	609	664	205	147	353	178
Adjusted Hourly Volume		282	1262	0	192	1313	529	609	664	205	147	353	178
Utilization Factor		0.08	0.21	0.00	0.05	0.22	0.29	0.17	0.17	0.11	0.08	0.09	0.10
Critical Factors		0.08 ✓					0.29 ✓	0.17 ✓					0.10 (0.13)

ICU Ratio = 0.74 (0.77) LOS = C (LOS = C)

Turning Movements at Intersection of : **El Camino Real and La Costa Avenue**

Time : 5:00 PM to 6:00 PM
Date : 08/07/07
Day : Tuesday
Name : Rob, David

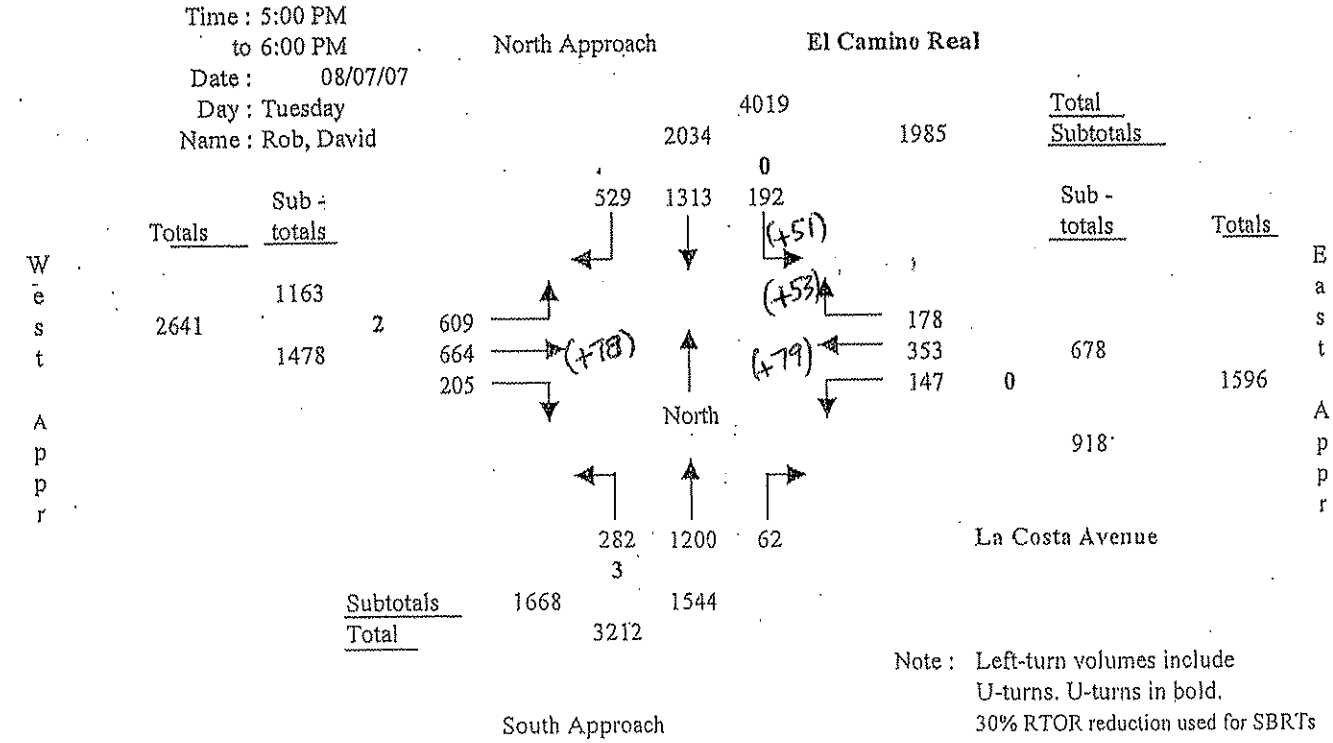

Note : Left-turn volumes include U-turns. U-turns in bold.
30% RTOR reduction used for SBRTs

Intersection Capacity Utilization (ICU) Worksheet

NTERSECTION CAPACITY UTILIZATION

NTERSECTION: Viejo Castilla Wy (N/S) La Costa Ave (E/W)
CENARIO : Existing
OUNT DATE: 1-17-06 PEAK HR: AM
NALYST : MTM AGENCY : Willdan

(+ PROJECT)

MOVEMENT	# OF LANES	CAPACITY	AM PEAK HOUR	~~UNADJUSTED~~ VOLUME	AM PEAK V/C	
NB Left	0	0	0		0.00	
NB Thru	0	0	0	0.00	0.00	*
NB Right	0	0	0		0.00	
SB Left/RIGHT	1	1,800	31+115	0.08	0.02,08	*
SB Thru	0	0	0		0.00	
SB Right	0	—	115		—	
EB Left	1	1,800	28	0.02	0.02	*
EB Thru	2	4,000	446	(+71) 0.13	0.11	
EB Right	0	0	0		0	
WB Left	0	0	0		0	
WB Thru	2	4,000	736+8	(+50) 0.20	0.18,19	*
WB Right	0	—	8		—	
NORTH/SOUTH CRITICAL SUMS				0.08	0.02,08	
EAST/WEST CRITICAL SUMS				0.22	0.20,21	
SUM OF CRITICAL V/C RATIO				0.30	0.22,29	
ADJUSTMENT FOR LOST TIME				0.10	0.10	
INTERSECTION CAPACITY UTILIZATION (ICU)				0.40	0.32,39	
LEVEL OF SERVICE (LOS)				A	A	

NOTES:

LOS	Maximum V/C
A	≤0.60
B	≤0.70
C	≤0.80
D	≤0.90
E	≤1.00
F	>1.00

* Denotes Critical Movements
** Extra wide outside lane

INTERSECTION CAPACITY UTILIZATION

INTERSECTION: Viejo Castilla Wy (N/S) La Costa Ave (E/W)
SCENARIO : Existing
COUNT DATE: 1-17-06 PEAK HR: PM
ANALYST : MTM AGENCY : Willdan

(+ PROJECT)

MOVEMENT	# OF LANES	CAPACITY	PM PEAK HOUR	~~UNADJUSTED~~ VOLUME	PM PEAK V/C	
NB Left	0	0	0		0.00	
NB Thru	0	0	0	0.00	0.00	*
NB Right	0	0	0		0.00	
SB Left/RIGHT	1	1,800	16+52	0.04	0.01,04	*
SB Thru	0	0	0		0.00	
SB Right	0	—	52		—	
EB Left	1	1,800	132		0.07	
EB Thru	2	4,000	787	(+128) 0.23	0.20	*
EB Right	0	0	0		0	
WB Left	0	0	0		0	*
WB Thru	2	4,000	442+22	(+132) 0.15	0.11,12	
WB Right	0	—	22		—	
NORTH/SOUTH CRITICAL SUMS				0.04	0.01,04	
EAST/WEST CRITICAL SUMS				0.23	0.20	
SUM OF CRITICAL V/C RATIO				0.27	0.21,24	
ADJUSTMENT FOR LOST TIME				0.10	0.10	
INTERSECTION CAPACITY UTILIZATION (ICU)				0.37	0.31,34	
LEVEL OF SERVICE (LOS)				A	A	

NOTES:

LOS	Maximum V/C
A	≤0.60
B	≤0.70
C	≤0.80
D	≤0.90
E	≤1.00
F	>1.00

* Denotes Critical Movements
** Extra wide outside lane

(+PROJECT) 25 A+P EX

Date Printed: 2/12/2006
Page 1 of 1

Viejo Castilla @ La Costa
isting

Intersection Capacity Utilization (ICU) Worksheet

NTERSECTION CAPACITY UTILIZATION

NTERSECTION: Romeria St (N/S) La Costa Ave (E/W)
SCENARIO : Existing
COUNT DATE: 1-12-06 PEAK HR: AM
ANALYST : MTM AGENCY : Willdan
(+PROJECT)

MOVEMENT	# OF LANES	CAPACITY	AM PEAK HOUR	~~UNADJUSTED~~ VOLUME	AM PEAK V/C	
NB Left	Ø	—	102		—	
NB Thru	Ø	—	10		—	
NB Right/THRU/LT	1	1,800	15+10+102	(+14) 0.08	0.01 .01	*
SB Left	Ø	—	15		—	
SB Thru	Ø	—	7		—	
SB Right/THRU/LT	1	1,800	8+7+15	(+14) 0.02	0.00 .02	*
EB Left	1	1,800	13		0.01	
EB Thru	1	2,000	378	(+77) 0.23	0.19	* *
EB Right	1	1,800	36		0.02	
WB Left	1	1,800	24	(+10) 0.02	0.01	* *
WB Thru +RT	2	4,000	577+7	(+50) 0.16	0.14 .15	
WB Right	Ø	—	7	(+10)	—	
NORTH/SOUTH CRITICAL SUMS				0.10	0.12 .09	
EAST/WEST CRITICAL SUMS				0.25	0.20 .20	
SUM OF CRITICAL V/C RATIO				0.35	0.32 .29	
ADJUSTMENT FOR LOST TIME				0.10	0.10	
INTERSECTION CAPACITY UTILIZATION (ICU)				0.45	0.42 .39	
LEVEL OF SERVICE (LOS)				A	A	

NOTES:

* Denotes Critical Movements
** Extra wide outside lane

LOS	Maximum V/C
A	≤0.60
B	≤0.70
C	≤0.80
D	≤0.90
E	≤1.00
F	>1.00

INTERSECTION CAPACITY UTILIZATION

INTERSECTION: Romeria St (N/S) La Costa Ave (E/W)
SCENARIO : Existing
COUNT DATE: 1-12-06 PEAK HR: PM
ANALYST : MTM AGENCY : Willdan
(+PROJECT)

MOVEMENT	# OF LANES	CAPACITY	PM PEAK HOUR	~~UNADJUSTED~~ VOLUME	PM PEAK V/C	
NB Left	Ø	—	32		—	
NB Thru	Ø	—	4		—	
NB Right/THRU/LT	1	1,800	17+4+32	(+25) 0.04	0.01 .03	*
SB Left	Ø	—	7			
SB Thru	Ø	—	1		—	
SB Right/THRU/LT	1	1,800	7+1+7	(+25) 0.02	0.00 .01	*
EB Left	1	1,800	8		0.00	
EB Thru	1	2,000	633	(+105) 0.37	0.32	* *
EB Right	1	1,800	45		0.03	
WB Left	1	1,800	6	(+26) 0.02	0.00	* *
WB Thru +RT	2	4,000	428+10	(+132) 0.15	0.11	
WB Right	Ø	—	10	(+26)	—	
NORTH/SOUTH CRITICAL SUMS				0.06	0.04	
EAST/WEST CRITICAL SUMS				0.39	0.32	
SUM OF CRITICAL V/C RATIO				0.45	0.36	
ADJUSTMENT FOR LOST TIME				0.10	0.10	
INTERSECTION CAPACITY UTILIZATION (ICU)				0.55	~~0.46~~	
LEVEL OF SERVICE (LOS)				A	A	

NOTES:

* Denotes Critical Movements
** Extra wide outside lane

LOS	Maximum V/C
A	≤0.60
B	≤0.70
C	≤0.80
D	≤0.90
E	≤1.00
F	>1.00

(+PROJECT)

26 A+B

Date Printed: 2/12/2006
Page 1 of 1

6 Romeria @ La Costa
Existing

Intersection Capacity Utilization (ICU) Worksheet

INTERSECTION CAPACITY UTILIZATION

INTERSECTION: Cadencia St (N/S) La Costa Ave (E/W)
SCENARIO : Existing
COUNT DATE: 1-12-06 PEAK HR: AM
ANALYST : MTM AGENCY : Willdan

MOVEMENT	# OF LANES	CAPACITY	AM PEAK HOUR	~~UNADJUSTED~~ (+PROJECT) VOLUME	AM PEAK V/C	
NB Left	~~0~~	—	4		—	
NB Thru	~~0~~	—	8		—	
NB Right/THRU/LT	1	1,800	29 +4+8	(+14) 0.03	0.02	
SB Left	~~0~~	—	75	(+1)	—	
SB Thru	~~0~~	—	19		—	
SB Right/THRU/LT	1	1,800	60 +19	(+14) 0.11	~~0.03~~ .09	*
EB Left	1	1,800	13		0.01	
EB Thru/RT	1	2,000	478 +4	(+105) 0.29	0.24	*
EB Right	~~0~~	—	4		—	
WB Left	1	1,800	9	(+10) 0.01	0.01	*
WB Thru/RT	2	4,000	453 +14	(+70) 0.13	~~0.11~~ .12	
WB Right	~~0~~	—	14	(+10)	—	
NORTH/SOUTH CRITICAL SUMS				0.14	~~0.09~~ .11	
EAST/WEST CRITICAL SUMS				0.30	0.25	
SUM OF CRITICAL V/C RATIO				0.34	~~0.34~~ .36	
ADJUSTMENT FOR LOST TIME				0.10	0.10	
INTERSECTION CAPACITY UTILIZATION (ICU)				0.44	~~0.44~~ .45	
LEVEL OF SERVICE (LOS)				A	A	

NOTES:

LOS	Maximum V/C
A	≤0.60
B	≤0.70
C	≤0.80
D	≤0.90
E	≤1.00
F	>1.00

* Denotes Critical Movements
** Extra wide outside lane

INTERSECTION CAPACITY UTILIZATION

INTERSECTION: Cadencia St (N/S) La Costa Ave (E/W)
SCENARIO : Existing
COUNT DATE: 1-12-06 PEAK HR: PM
ANALYST : MTM AGENCY : Willdan

MOVEMENT	# OF LANES	CAPACITY	PM PEAK HOUR	UNADJUSTED (+PROJECT) VOLUME	PM PEAK V/C	
NB Left		—	8		—	
NB Thru		—	7		—	*
NB Right/THRU/RT	1	1,800	8 +8+7	(+25) 0.03	~~0.00~~ .01	*
SB Left		—	34		—	*
SB Thru		—	4			
SB Right/THRU/LT	1	1,800	22 +34+4	(+25) 0.05	~~0.01~~ .03	*
EB Left	1	1,800	89		0.05	
EB Thru/RT	1	2,000	560 +12	(+178) 0.38	~~0.28~~ .29	*
EB Right		—	12		—	
WB Left	1	1,800	12	(+26) 0.02	0.01	*
WB Thru/RT	2	4,000	351 +42	(+184) 0.[illegible]	~~0.09~~ .10	
WB Right	~~0~~ 1	—	42	(+26)	—	
NORTH/SOUTH CRITICAL SUMS				0.08	~~0.05~~ .04	
EAST/WEST CRITICAL SUMS				0.40	~~0.29~~ .30	
SUM OF CRITICAL V/C RATIO				0.48	~~0.34~~ .34	
ADJUSTMENT FOR LOST TIME				0.10	0.10	
INTERSECTION CAPACITY UTILIZATION (ICU)				0.58	~~0.44~~ .44	
LEVEL OF SERVICE (LOS)				A	A	

NOTES:

LOS	Maximum V/C
A	≤0.60
B	≤0.70
C	≤0.80
D	≤0.90
E	≤1.00
F	>1.00

* Denotes Critical Movements
** Extra wide outside lane

(+PROJECT) 27 A+ EX

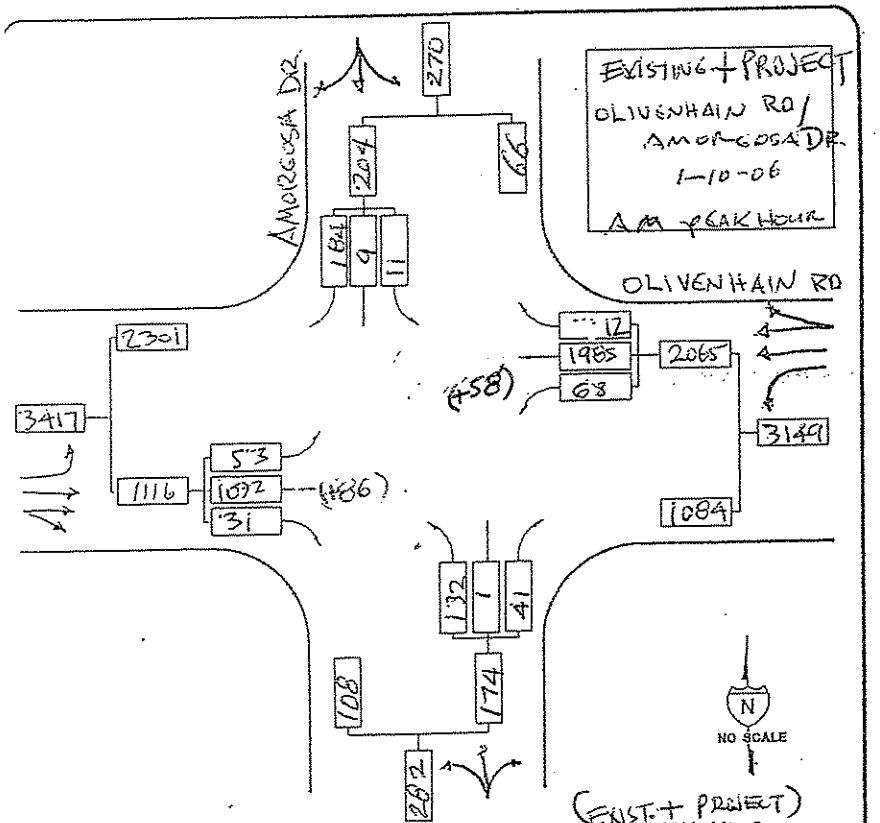

(EXIST. + PROJECT)

ICU Alt. A MOVE	CAPACITY	ICU	ICU Alt. B MOVE	CAPACITY	ICU	ICU Alt. C MOVE	CAPACITY	ICU
	1997/4000	0.50					2048/4000	0.51
	53/1800	0.03					NC	0.03
	209/1800	0.11					NC	0.11
	174/1800	0.10					NC	0.10
	+	0.10					+	0.10
		0.84						0.85

L.O.S. ____ No mitigation — LOS D

L.O.S. ____ Mitigation

L.O.S. ____ Mitigation — LOS D

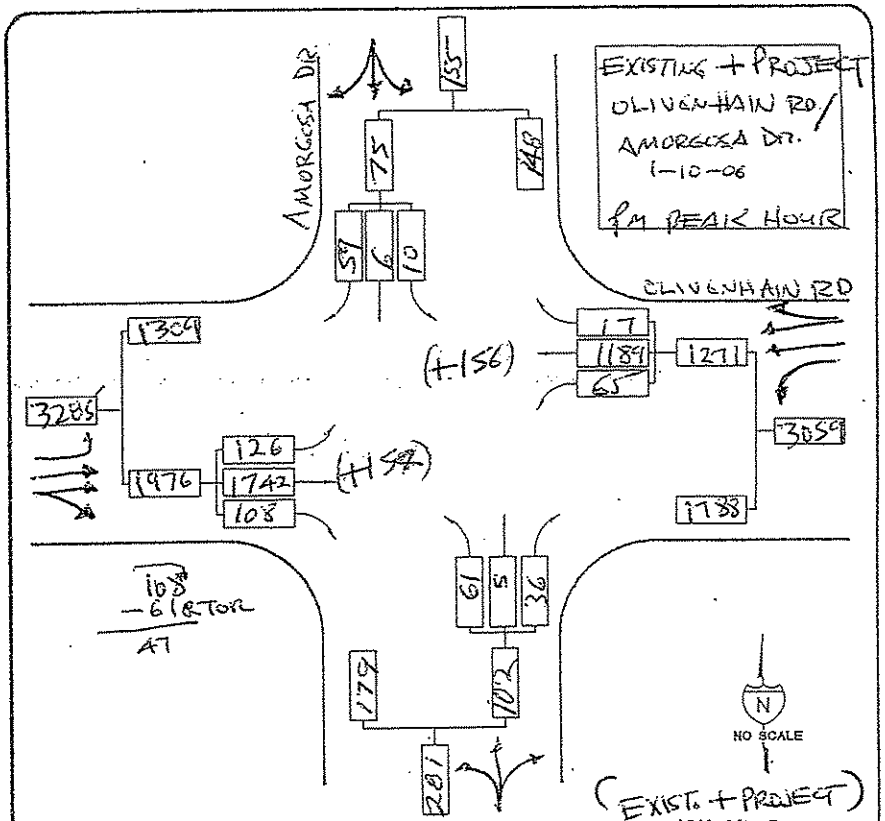

(EXIST. + PROJECT)

ICU Alt. A MOVE	CAPACITY	ICU	ICU Alt. B MOVE	CAPACITY	ICU	ICU Alt. C MOVE	CAPACITY	ICU
	1742+4/4000	0.45					1896/4000	0.47
	65/1800	0.04					NC	0.04
	75/1800	0.04					NC	0.04
	102/1800	0.06					NC	0.06
	+	0.10					+	0.10
		0.69						0.71

L.O.S. ____ No mitigation — LOS B

L.O.S. ____ Mitigation

L.O.S. ____ Mitigation — LOS C

PAGE ___ OF ___

EX. + PROJECT

ATTA #9

URBAN SYSTEMS

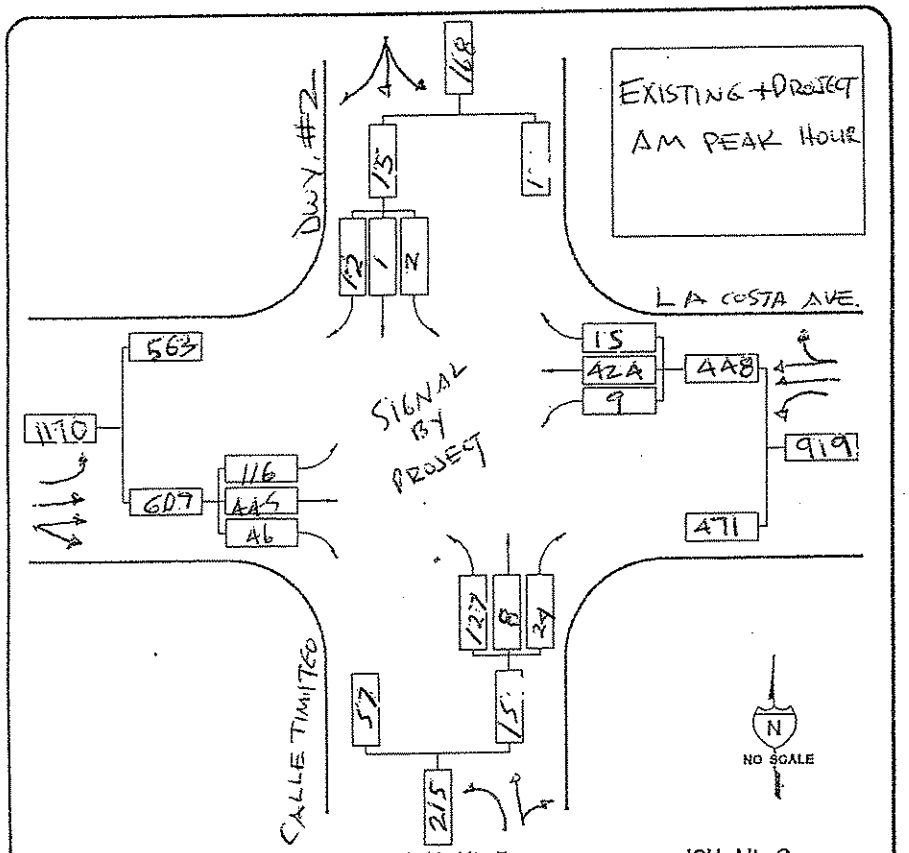

ICU Alt. A

MOVE	CAPACITY	ICU
	439/4000	0.11
	116/1800	0.06
	14/1800	0.01
	127/1800	0.07
	+ LOST TIME	0.10
		0.35

L.O.S. ____ No mitigation

LOS A

ICU Alt. B

MOVE	CAPACITY	ICU

L.O.S. ____ Mitigation

ICU Alt. C

MOVE	CAPACITY	ICU

L.O.S. ____ Mitigation

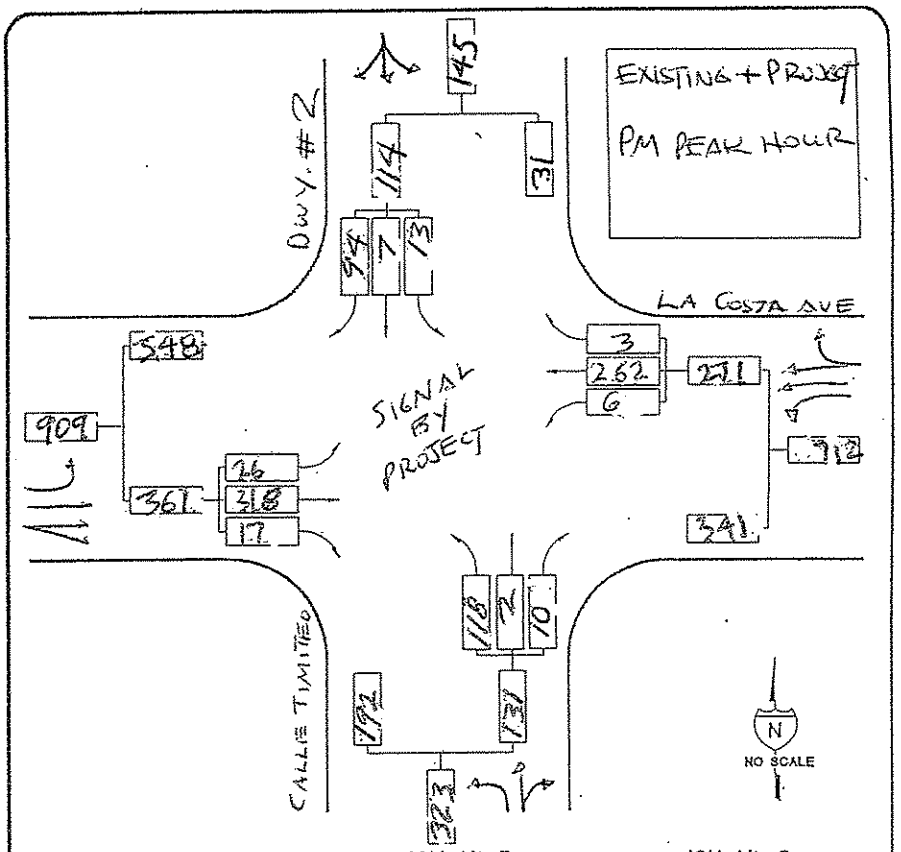

ICU Alt. A

MOVE	CAPACITY	ICU
	335/4000	0.08
	6/1800	0.01
	114/1800	0.06
	118/1800	0.07
+ LOST TIME		0.10
		0.32

L.O.S. ____ No mitigation

LOS A

ICU Alt. B

MOVE	CAPACITY	ICU

L.O.S. ____ Mitigation

ICU Alt. C

MOVE	CAPACITY	ICU

L.O.S. ____ Mitigation

PAGE OF

A+P #38 EX + PROJECT

MLS

URBAN SYSTEMS

#39 EXIST + PROJECT

PAGE OF A&P

EXISTING + PROJECT
AM PEAK HOUR

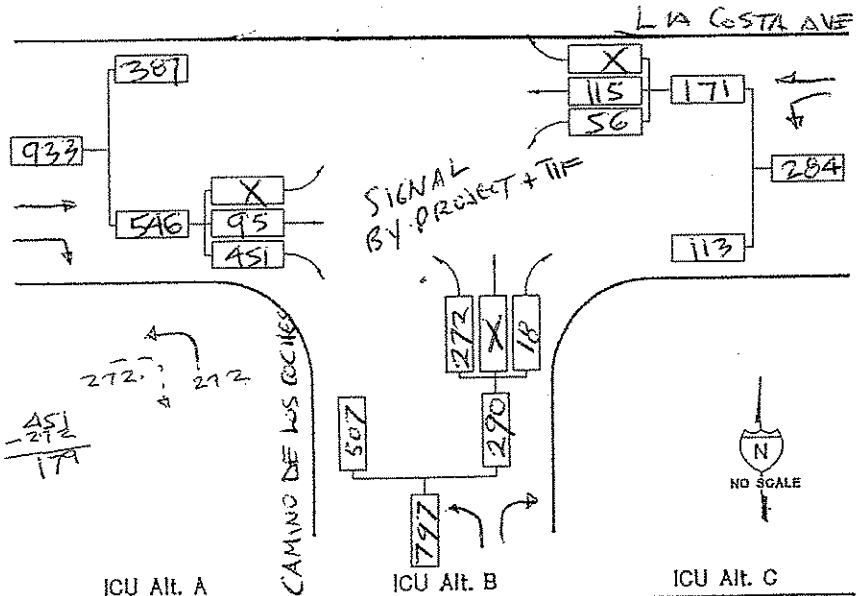

ICU Alt. A

MOVE	CAPACITY	ICU
	179/1800	0.10
	56/1800	0.03
	272/1800	0.15
+ LOST TIME		0.10
		0.38

L.O.S. ____ No mitigation

LOS A

ICU Alt. B

MOVE	CAPACITY	ICU

L.O.S. ____ Mitigation

ICU Alt. C

MOVE	CAPACITY	ICU

L.O.S. ____ Mitigation

EXISTING + PROJECT
PM PEAK HOUR

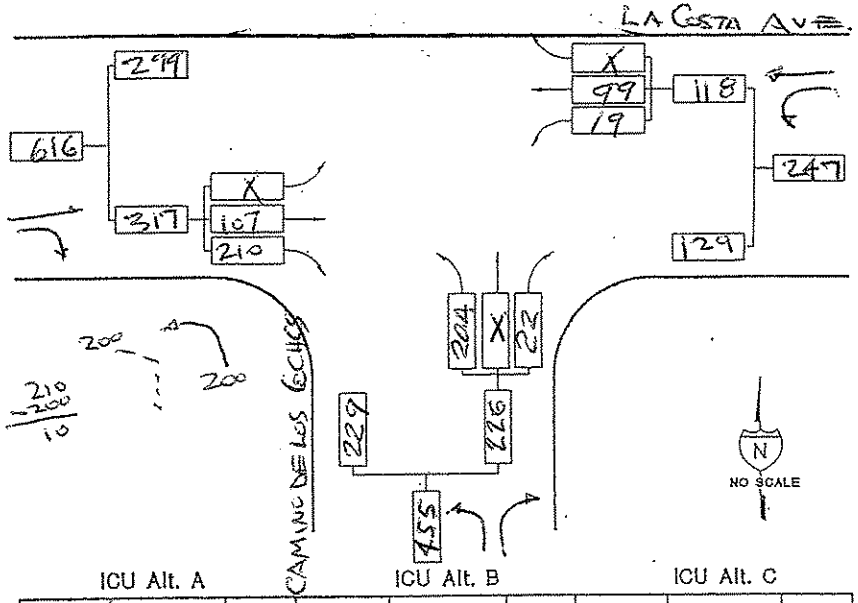

ICU Alt. A

MOVE	CAPACITY	ICU
	107/2000	0.05
	19/1800	0.01
	204/1800	0.11
+ LOST TIME		0.10
		0.27

L.O.S. ____ No mitigation

LOS A

ICU Alt. B

MOVE	CAPACITY	ICU

L.O.S. ____ Mitigation

ICU Alt. C

MOVE	CAPACITY	ICU

L.O.S. ____ Mitigation

MS

URBAN SYSTEMS

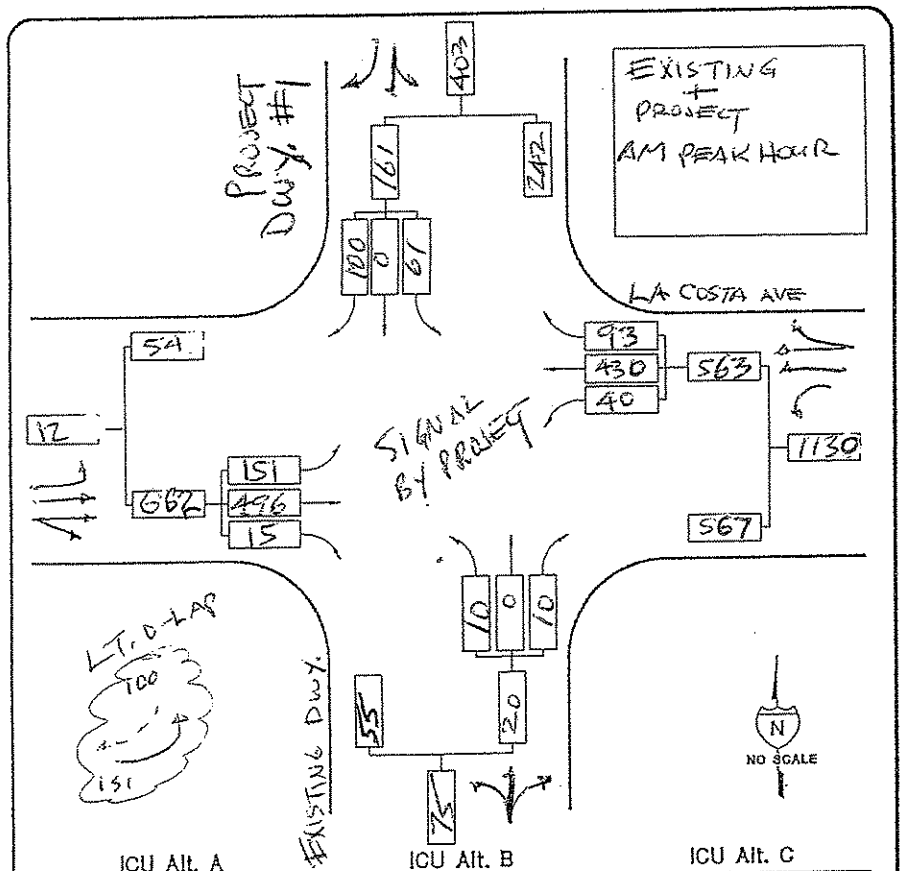

ICU Alt. A			ICU Alt. B			ICU Alt. C		
MOVE	CAPACITY	ICU	MOVE	CAPACITY	ICU	MOVE	CAPACITY	ICU
	432+93 / 4000	0.13						
	151 / 1800	0.08						
	61 / 1800	0.03						
	20 / 1800	0.01						
+ LOST TIME		0.10						
		0.35						

L.O.S. ____ No mitigation — LOS A — L.O.S. ____ Mitigation — L.O.S. ____ Mitigation

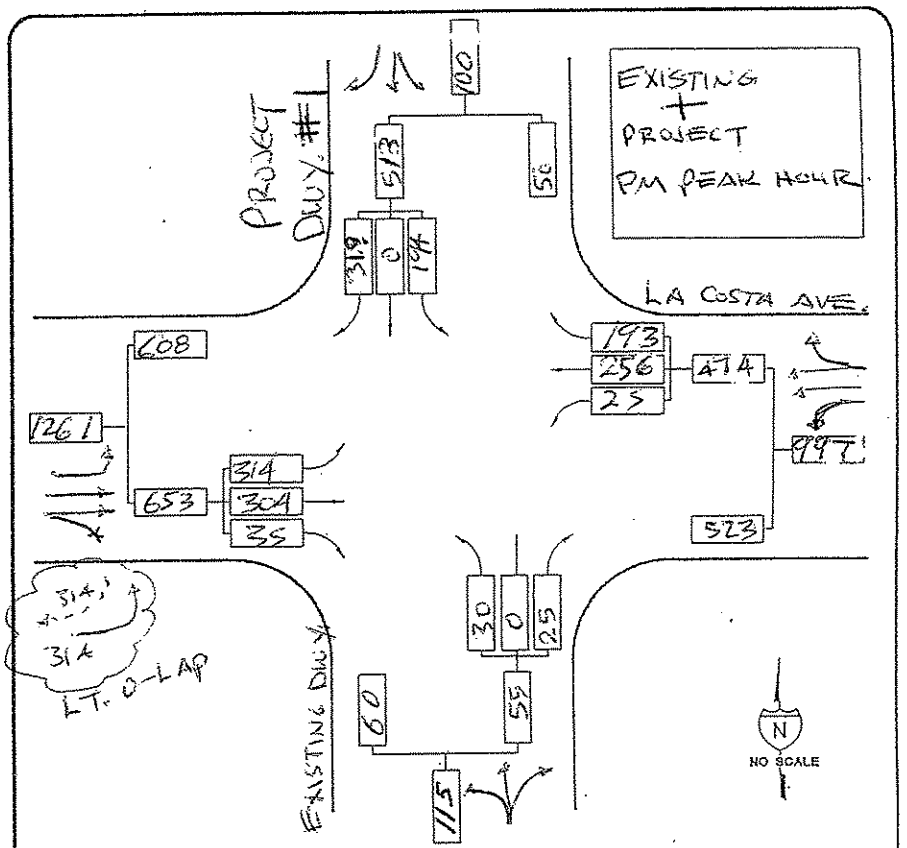

ICU Alt. A			ICU Alt. B			ICU Alt. C		
MOVE	CAPACITY	ICU	MOVE	CAPACITY	ICU	MOVE	CAPACITY	ICU
	256+193 / 4000	0.11						
	314 / 1800	0.17						
	194 / 1800	0.11						
	55 / 1800	0.03						
+ LOST TIME		0.10						
		0.52						

L.O.S. ____ No mitigation — LOS A — L.O.S. ____ Mitigation — L.O.S. ____ Mitigation

MS

URBAN SYSTEMS

PAGE A OF #P

#42 EXISTING + PROJ

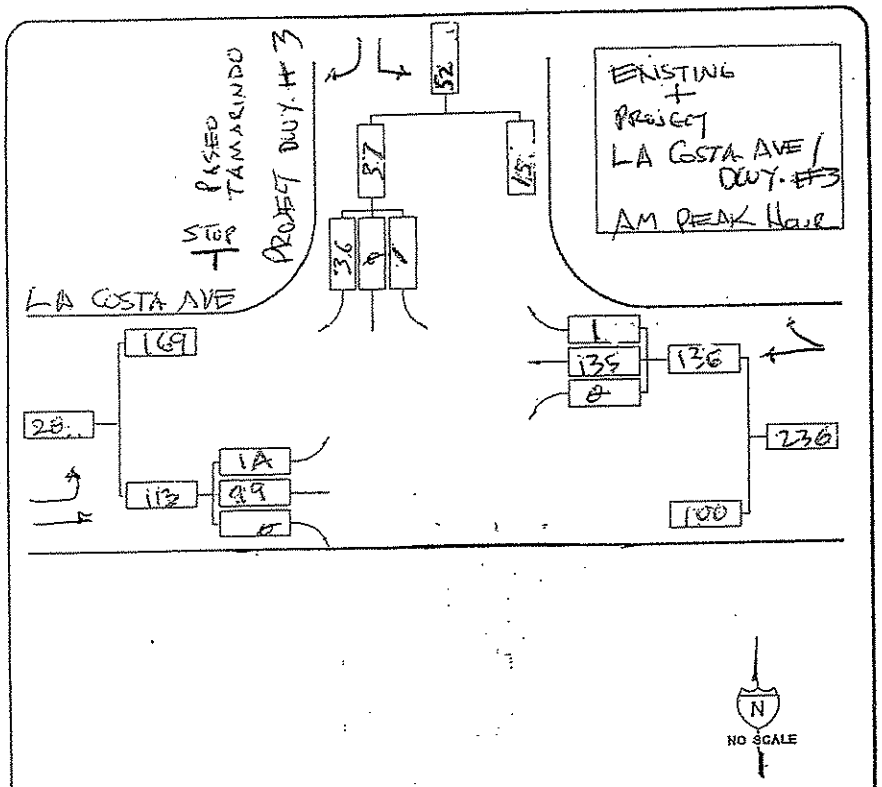

ICU Alt. A			ICU Alt. B			ICU Alt. C		
MOVE	CAPACITY	ICU	MOVE	CAPACITY	ICU	MOVE	CAPACITY	ICU
←	135/2000	0.07						
↑	1A/1800	0.01						
↓	36/1800	0.02						
		+ 0.10						
		0.20						

L.O.S. ____ No mitigation

LOS A

L.O.S. ____ Mitigation

L.O.S. ____ Mitigation

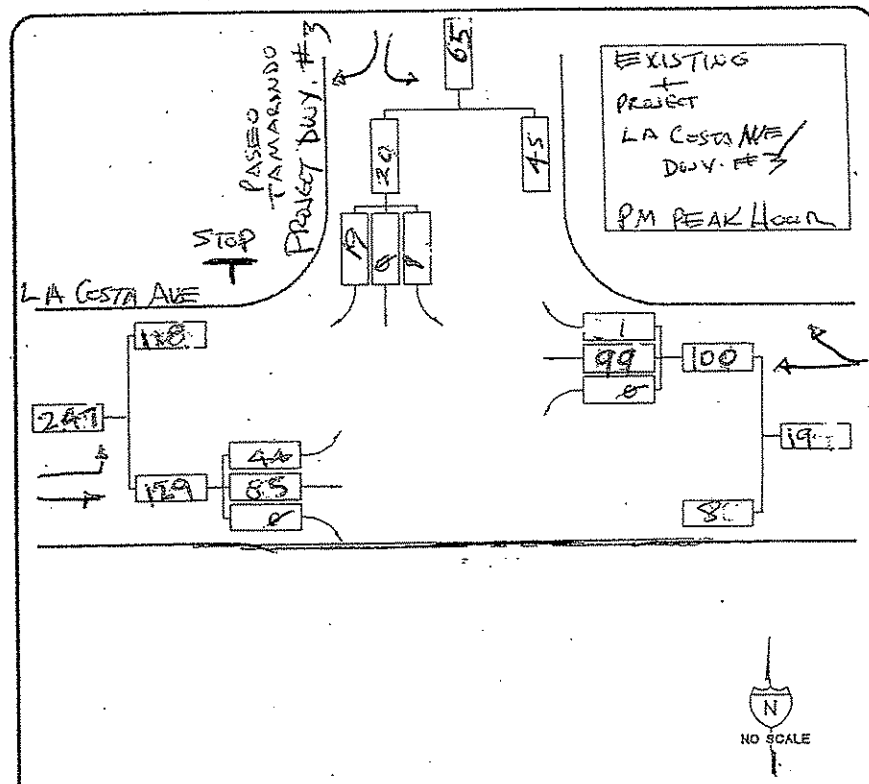

ICU Alt. A			ICU Alt. B			ICU Alt. C		
MOVE	CAPACITY	ICU	MOVE	CAPACITY	ICU	MOVE	CAPACITY	ICU
↖	100/2000	0.05						
↗	44/1800	0.03						
↓	19/1800	0.01						
		+ 0.10						
		0.19						

L.O.S. ____ No mitigation

LOS A

L.O.S. ____ Mitigation

L.O.S. ____ Mitigation

PAGE ___ OF ___

43 A & P

EXIST. + PROJECT

URBAN SYSTEMS

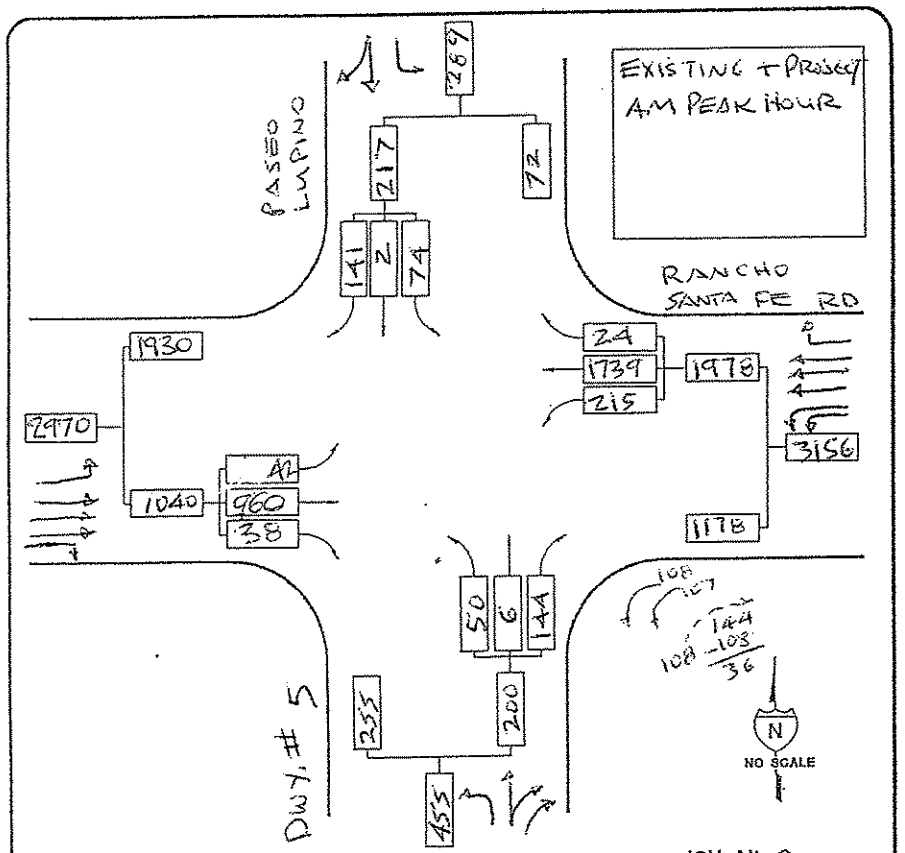

ICU Alt. A			ICU Alt. B			ICU Alt. C		
MOVE	CAPACITY	ICU	MOVE	CAPACITY	ICU	MOVE	CAPACITY	ICU
	1739 / 6000	0.29						
	42 / 1800	0.02						
	143 / 2000	0.07						
	50 / 1800	0.03						
+ LOST TIME		0.10						
		0.51						

L.O.S. ____ No mitigation — LOS A — L.O.S. ____ Mitigation — L.O.S. ____ Mitigation

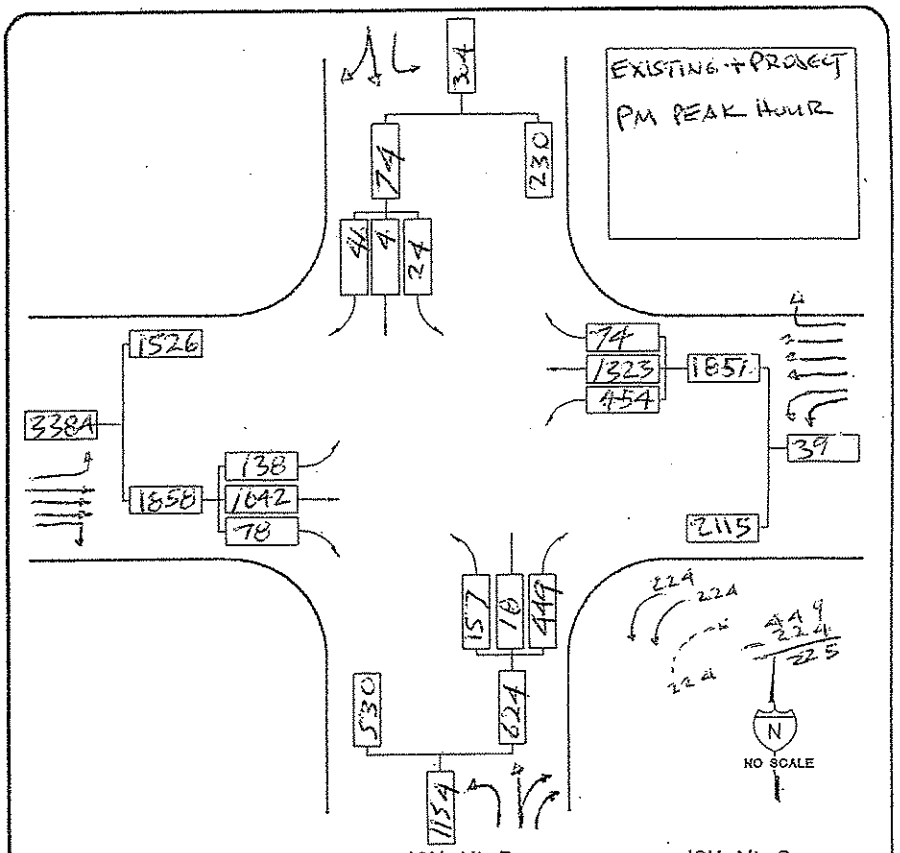

ICU Alt. A			ICU Alt. B			ICU Alt. C		
MOVE	CAPACITY	ICU	MOVE	CAPACITY	ICU	MOVE	CAPACITY	ICU
	1642 / 6000	0.27						
	448 / 3600	0.12						
	50 / 1800	0.03						
	157 / 2000	0.08						
+ LOST TIME		0.10						
		0.60						

L.O.S. ____ No mitigation — LOS A — L.O.S. ____ Mitigation — L.O.S. ____ Mitigation

MS

URBAN SYSTEMS

PAGE OF A & P

45 EXISTING + PROJECT

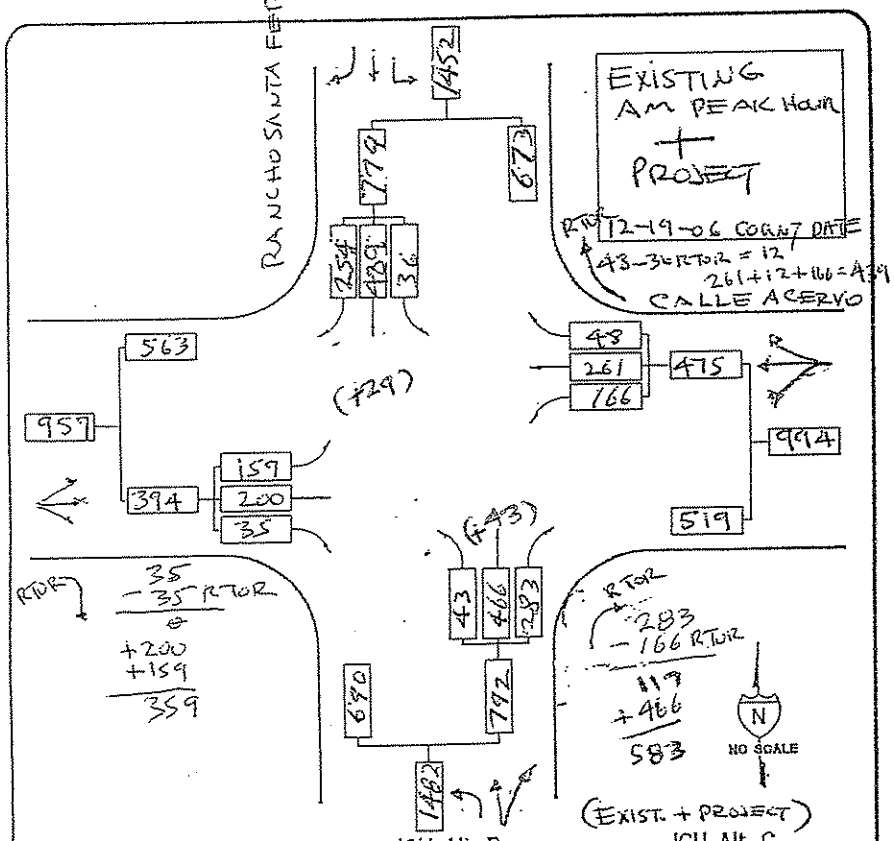

ICU Alt. A			ICU Alt. B			ICU Alt. C		
MOVE	CAPACITY	ICU	MOVE	CAPACITY	ICU	MOVE	CAPACITY	ICU
	439/1800	0.24				NC	NC	0.24
	359/1800	0.20				NC	NC	0.20
	36/1800	0.02				NC	NC	0.02
	583/2000	0.29					626/2000	0.31
LOST TIME +		0.10					+	0.10
		0.85						0.87

L.O.S. ____ No mitigation — LOS D

L.O.S. ____ Mitigation

L.O.S. ____ Mitigation — LOS D

NC = NO CHANGE

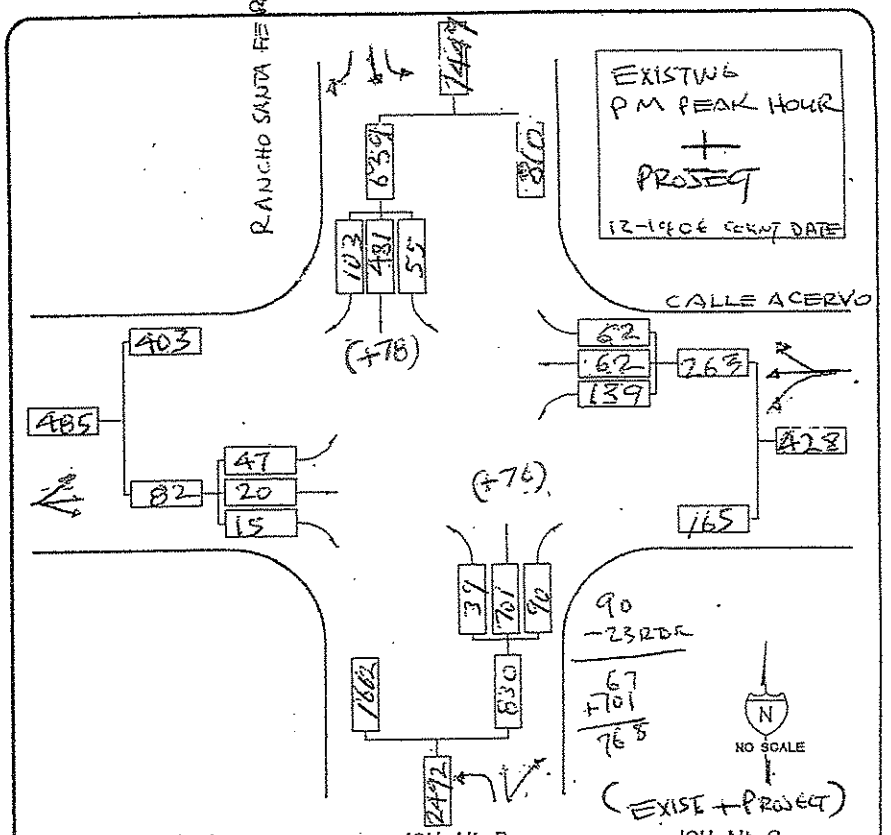

ICU Alt. A			ICU Alt. B			ICU Alt. C		
MOVE	CAPACITY	ICU	MOVE	CAPACITY	ICU	MOVE	CAPACITY	ICU
	263/1800	0.15				NC	NC	0.15
	82/1800	0.05				NC	NC	0.05
	768/2000	0.38					844/2000	0.42
	55/1800	0.03				NC	NC	0.03
LOST TIME +		0.10					+	0.10
		0.71						0.75

L.O.S. ____ No mitigation — LOS C

L.O.S. ____ Mitigation

L.O.S. ____ Mitigation — LOS C

NC = NO CHANGE

46 EX A&P + PROJECT

PAGE ___ OF ___

MJ

URBAN SYSTEMS

TABLE 5-5

Existing Plus Project Intersection Levels of Service Summary - HCM Method
Intersections Outside Carlsbad

	Intersection	AM Peak Hour		PM Peak Hour	
		Delay	LOS	Delay	LOS
1	Rancho Santa Fe Rd. at San Marcos Blvd.	37.1	D	49.6	D
2	Rancho Santa Fe Rd. at Lake San Marcos Dr.	10.6	B	13.2	B
3	Rancho Santa Fe Rd. at Camino Del Arroyo Dr.	10.3	B	10.7	B
4	Rancho Santa Fe Rd. at Island Dr.	3.2	A	3.2	A
10	Rancho Santa Fe Rd. at Melrose Dr.	33.4	C	38.5	D
17	Rancho Santa Fe Rd. at El Camino Del Norte ①	45.6	E	44.0	E
28	I-5 SB Ramps at Leucadia Blvd.	20.0	B	20.1	B
29	I-5 NB Ramps at Leucadia Blvd.	14.7	B	19.4	B
30	Clark Ave. at Leucadia Blvd.	32.5	C	13.3	B
31	Saxony Rd. at Leucadia Blvd.	29.9	C	40.5	D
32	Sidonia St. at Leucadia Blvd.	12.4	B	17.2	B
33	Quail Gardens at Leucadia Blvd.	36.1	D	35.0	D
34	Garden View Rd. at Leucadia Blvd.	25.0	C	33.9	D
35	Town Center Pl. at Leucadia Blvd.	19.9	B	25.0	C
36	El Camino Real at Leucadia Blvd.	42.2	D	53.0	D
37	Amargosa Dr. at Olivenhain Rd.	31.2	C	30.7	C
40	Melrose Dr. at San Elijo Rd.	27.0	C	28.1	C

Legend:
① = Existing All-Way Stop Sign Control; LOS "E" at Greater than 35.0 Seconds of Delay.

Note:
A Project Significant Impact Occurs Only at LOS "E" or "F" if the Project Increase in Delay is Greater Than 2.0 Seconds. No Signalized Location is at LOS "E" or "F" With Project Traffic Added to Existing Conditions, so that Project Impacts at these Locations are Less than Significant.

Signalized Intersection	
Delay	LOS
00.0-10.0	A
10.1-20.0	B
20.1-35.0	C
35.1-55.0	D
55.1-80.0	E
Over 80.0	F

1 - A
EXTP

SHORT REPORT

General Information		Site Information	
Analyst	USAI	Intersection	RHO. STA. FE. RD./SAN MARCOS B
Agency or Co.	USAI	Area Type	All other areas
Date Performed	09/05/08	Jurisdiction	SAN MARCOS
Time Period	AM PEAK HOUR	Analysis Year	EXISTING PLUS PROJECT

Volume and Timing Input

	EB			WB			NB			SB		
	LT	TH	RT	LT	TH	RT	LT	TH	RT	LT	TH	RT
Num. of Lanes	2	2	1	2	2	0	2	2	0	1	2	1
Lane group	L	T	R	L	TR		L	T		L	T	R
Volume (vph)	258	513	56	598	786	67	121	451		51	676	283
% Heavy veh	2	2	2	2	2	2	2	2		2	2	2
PHF	0.95	0.95	0.95	0.95	0.95	0.95	0.95	0.95		0.95	0.95	0.95
Actuated (P/A)	A	A	A	A	A	A	A	A		A	A	A
Startup lost time	2.0	2.0	2.0	2.0	2.0		2.0	2.0		2.0	2.0	2.0
Ext. eff. green	2.0	2.0	2.0	2.0	2.0		2.0	2.0		2.0	2.0	2.0
Arrival type	5	5	5	5	5		5	5		5	5	5
Unit Extension	3.0	3.0	3.0	3.0	3.0		3.0	3.0		3.0	3.0	3.0
Ped/Bike/RTOR Volume	0	0	0	0	0	0	0			0	0	130
Lane Width	12.0	12.0	12.0	12.0	12.0		12.0	12.0		12.0	12.0	12.0
Parking/Grade/Parking	N	0	N	N	0	N	N	0	N	N	0	N
Parking/hr												
Bus stops/hr	0	0	0	0	0		0	0		0	0	0
Unit Extension	3.0	3.0	3.0	3.0	3.0		3.0	3.0		3.0	3.0	3.0

Phasing	Excl. Left	WB Only	Thru & RT	04	Excl. Left	Thru & RT	07	08
Timing	G = 18.0	G = 10.0	G = 25.0	G = 0.0	G = 17.0	G = 25.0	G = 0.0	G = 0.0
	Y = 5	Y = 5	Y = 5	Y =	Y = 5	Y = 5	Y = 0	Y =

Duration of Analysis (hrs) = 0.25 | Cycle Length C = 120.0

Lane Group Capacity, Control Delay, and LOS Determination

	EB			WB			NB			SB		
Adj. flow rate	272	540	59	629	898		127	475		54	712	161
Lane group cap.	488	778	588	895	1230		461	778		237	778	312
v/c ratio	0.56	0.69	0.10	0.70	0.73		0.28	0.61		0.23	0.92	0.52
Green ratio	0.15	0.21	0.39	0.28	0.33		0.14	0.21		0.14	0.21	0.21
Unif. delay d1	47.3	44.0	23.1	39.1	35.2		46.0	43.1		45.7	46.5	42.1
Delay factor k	0.15	0.26	0.11	0.27	0.29		0.11	0.20		0.11	0.43	0.12
Increm. delay d2	1.4	2.7	0.1	2.5	2.2		0.3	1.4		0.5	15.4	1.5
PF factor	0.882	0.825	0.571	0.747	0.667		0.890	0.825		0.890	0.825	0.825
Control delay	43.2	38.9	13.3	31.7	25.7		41.3	36.9		41.1	53.7	36.2
Lane group LOS	D	D	B	C	C		D	D		D	D	D
Apprch. delay	38.5			28.2			37.9			50.0		
Approach LOS	D			C			D			D		
Intersec. delay	37.1			Intersection LOS						D		

HCS2000™ Copyright © 2000 University of Florida, All Rights Reserved Version 4.1f

HCS2000: Signalized Intersections Release 4.1f

Urban Systems Inc.
4540 Kearny Villa Rd.
San Diego Ca 92123

Phone: 858-560-4911 Fax:
E-Mail:

1-A
EXTP

OPERATIONAL ANALYSIS

Analyst: USAI
Agency/Co.: USAI
Date Performed: 09/05/08
Analysis Time Period: AM PEAK HOUR
Intersection: RHO. STA. FE. RD./SAN MARCOS B
Area Type: All other areas
Jurisdiction: SAN MARCOS
Analysis Year: EXISTING PLUS PROJECT
Project ID: LA COSTA
E/W St: SAN MARCOS DR. N/S St: RANCHO SANTA FE RD.

VOLUME DATA

	Eastbound			Westbound			Northbound			Southbound		
	L	T	R	L	T	R	L	T	R	L	T	R
Volume	258	513	56	598	786	67	121	451		51	676	283
% Heavy Veh	2	2	2	2	2	2	2	2		2	2	2
PHF	0.95	0.95	0.95	0.95	0.95	0.95	0.95	0.95		0.95	0.95	0.95
PK 15 Vol	68	135	15	157	207	18	32	119		13	178	74
Hi Ln Vol												
% Grade		0			0			0			0	
Ideal Sat	1800	2000	1800	1800	2000		1800	2000		1800	2000	1800
ParkExist												
NumPark												
No. Lanes	2	2	1	2	2	0	2	2	0	1	2	1
LGConfig	L	T	R	L	TR		L	T		L	T	R
Lane Width	12.0	12.0	12.0	12.0	12.0		12.0	12.0		12.0	12.0	12.0
RTOR Vol			0			0						130
Adj Flow	272	540	59	629	898		127	475		54	712	161
%InSharedLn												
Prop LTs		0.000			0.000			0.000			0.000	
Prop RTs		0.000	1.000		0.079			0.000			0.000	1.000
Peds Bikes	0		0	0		0	0			0		0
Buses	0	0	0	0	0		0	0		0	0	0
%InProtPhase			0.0			0.0						

Duration 0.25 Area Type: All other areas

OPERATING PARAMETERS

	Eastbound			Westbound			Northbound			Southbound		
	L	T	R	L	T	R	L	T	R	L	T	R
Init Unmet	0.0	0.0	0.0	0.0	0.0		0.0	0.0		0.0	0.0	0.0
Arriv. Type	5	5	5	5	5		5	5		5	5	5
Unit Ext.	3.0	3.0	3.0	3.0	3.0		3.0	3.0		3.0	3.0	3.0
I Factor		1.000			1.000			1.000			1.000	
Lost Time	2.0	2.0	2.0	2.0	2.0		2.0	2.0		2.0	2.0	2.0
Ext of g	2.0	2.0	2.0	2.0	2.0		2.0	2.0		2.0	2.0	2.0
Ped Min g		3.2			3.2			3.2			3.2	

1-P
EX+P

SHORT REPORT

General Information		Site Information	
Analyst	USAI	Intersection	RHO. STA. FE. RD./SAN MARCOS B
Agency or Co.	USAI	Area Type	All other areas
Date Performed	09/05/08	Jurisdiction	SAN MARCOS
Time Period	PM PEAK HOUR	Analysis Year	EXISTING PLUS PROJECT

Volume and Timing Input

	EB			WB			NB			SB		
	LT	TH	RT	LT	TH	RT	LT	TH	RT	LT	TH	RT
Num. of Lanes	2	2	1	2	2	0	2	2	0	1	2	1
Lane group	L	T	R	L	TR		L	T		L	T	R
Volume (vph)	269	1048	58	705	536	71	133	761		144	545	122
% Heavy veh	2	2	2	2	2	2	2	2		2	2	2
PHF	0.95	0.95	0.95	0.95	0.95	0.95	0.95	0.95		0.95	0.95	0.95
Actuated (P/A)	A	A	A	A	A	A	A	A		A	A	A
Startup lost time	2.0	2.0	2.0	2.0	2.0		2.0	2.0		2.0	2.0	2.0
Ext. eff. green	2.0	2.0	2.0	2.0	2.0		2.0	2.0		2.0	2.0	2.0
Arrival type	5	5	5	5	5		5	5		5	5	5
Unit Extension	3.0	3.0	3.0	3.0	3.0		3.0	3.0		3.0	3.0	3.0
Ped/Bike/RTOR Volume	0	0	0	0	0	0	0			0	0	0
Lane Width	12.0	12.0	12.0	12.0	12.0		12.0	12.0		12.0	12.0	12.0
Parking/Grade/Parking	N	0	N	N	0	N	N	0	N	N	0	N
Parking/hr												
Bus stops/hr	0	0	0	0	0		0	0		0	0	0
Unit Extension	3.0	3.0	3.0	3.0	3.0		3.0	3.0		3.0	3.0	3.0

Phasing	Excl. Left	Thru & RT	03	04	Excl. Left	Thru & RT	07	08
Timing	G = 24.0	G = 38.0	G = 0.0	G =	G = 13.0	G = 25.0	G = 0.0	G = 0.0
	Y = 5	Y = 5	Y =	Y =	Y = 5	Y = 5	Y = 0	Y =

Duration of Analysis (hrs) = 0.25 | Cycle Length C = 120.0

Lane Group Capacity, Control Delay, and LOS Determination

	EB			WB			NB			SB		
Adj. flow rate	283	1103	61	742	639		140	801		152	574	128
Lane group cap.	651	1182	700	762	1045		353	778		182	778	312
v/c ratio	0.43	0.93	0.09	0.97	0.61		0.40	1.03		0.84	0.74	0.41
Green ratio	0.20	0.32	0.47	0.20	0.32		0.11	0.21		0.11	0.21	0.21
Unif. delay d1	42.1	39.8	17.8	47.7	34.7		49.8	47.5		52.4	44.4	41.1
Delay factor k	0.11	0.45	0.11	0.48	0.20		0.11	0.50		0.37	0.30	0.11
Increm. delay d2	0.5	13.2	0.1	26.2	1.1		0.7	40.1		27.2	3.7	0.9
PF factor	0.833	0.691	0.417	0.833	0.691		0.919	0.825		0.919	0.825	0.825
Control delay	35.5	40.7	7.5	65.9	25.1		46.5	79.2		75.4	40.4	34.8
Lane group LOS	D	D	A	E	C		D	E		E	D	C
Apprch. delay	38.3			47.0			74.4			45.8		
Approach LOS	D			D			E			D		
Intersec. delay	49.6			Intersection LOS						D		

HCS2000™ Copyright © 2000 University of Florida, All Rights Reserved Version 4.1f

HCS2000: Signalized Intersections Release 4.1f

Urban Systems Inc.
4540 Kearny Villa Rd.
San Diego Ca 92123

Phone: 858-560-4911 Fax:
E-Mail:

1-P
EXTP

OPERATIONAL ANALYSIS

Analyst: USAI
Agency/Co.: USAI
Date Performed: 09/05/08
Analysis Time Period: PM PEAK HOUR
Intersection: RHO. STA. FE. RD./SAN MARCOS B
Area Type: All other areas
Jurisdiction: SAN MARCOS
Analysis Year: EXISTING PLUS PROJECT
Project ID: LA COSTA TOWN SQUARE
E/W St: SAN MARCOS DR. N/S St: RANCHO SANTA FE RD.

VOLUME DATA

	Eastbound			Westbound			Northbound			Southbound		
	L	T	R	L	T	R	L	T	R	L	T	R
Volume	269	1048	58	705	536	71	133	761		144	545	122
% Heavy Veh	2	2	2	2	2	2	2	2		2	2	2
PHF	0.95	0.95	0.95	0.95	0.95	0.95	0.95	0.95		0.95	0.95	0.95
PK 15 Vol	71	276	15	186	141	19	35	200		38	143	32
Hi Ln Vol												
% Grade		0			0			0			0	
Ideal Sat	1800	2000	1800	2000	1800		1800	2000		1800	2000	1800
ParkExist												
NumPark												
No. Lanes	2	2	1	2	2	0	2	2	0	1	2	1
LGConfig	L	T	R	L	TR		L	T		L	T	R
Lane Width	12.0	12.0	12.0	12.0	12.0		12.0	12.0		12.0	12.0	12.0
RTOR Vol			0			0						0
Adj Flow	283	1103	61	742	639		140	801		152	574	128
%InSharedLn												
Prop LTs		0.000			0.000			0.000			0.000	
Prop RTs		0.000	1.000		0.117			0.000			0.000	1.000
Peds Bikes	0		0	0		0	0			0		0
Buses	0	0	0	0	0		0	0		0	0	0
%InProtPhase			0.0									

Duration 0.25 Area Type: All other areas

OPERATING PARAMETERS

	Eastbound			Westbound			Northbound			Southbound		
	L	T	R	L	T	R	L	T	R	L	T	R
Init Unmet	0.0	0.0	0.0	0.0	0.0		0.0	0.0		0.0	0.0	0.0
Arriv. Type	5	5	5	5	5		5	5		5	5	5
Unit Ext.	3.0	3.0	3.0	3.0	3.0		3.0	3.0		3.0	3.0	3.0
I Factor		1.000			1.000			1.000			1.000	
Lost Time	2.0	2.0	2.0	2.0	2.0		2.0	2.0		2.0	2.0	2.0
Ext of g	2.0	2.0	2.0	2.0	2.0		2.0	2.0		2.0	2.0	2.0
Ped Min g		3.2			3.2			3.2			3.2	

1-A EXIST. + P

SHORT REPORT

General Information		Site Information	
Analyst	USAI	Intersection	RHO. STA. FE DR./LAKE SAN MARC
Agency or Co.	USAI	Area Type	All other areas
Date Performed	09/05/08	Jurisdiction	SAN MARCOS
Time Period	AM PEAK HOUR	Analysis Year	EXISTING PLUS PROJECT

Volume and Timing Input

	EB			WB			NB			SB		
	LT	TH	RT	LT	TH	RT	LT	TH	RT	LT	TH	RT
Num. of Lanes	0	0	0	1	0	1	0	2	0	1	2	0
Lane group				L		R		TR		L	T	
Volume (vph)				191		141		1131	78	121	1212	
% Heavy veh				2		2		2	2	2	2	
PHF				0.95		0.95		0.95	0.95	0.95	0.95	
Actuated (P/A)				A		A		A	A	A	A	
Startup lost time				2.0		2.0		2.0		2.0	2.0	
Ext. eff. green				2.0		2.0		2.0		2.0	2.0	
Arrival type				5		5		5		5	5	
Unit Extension				3.0		3.0		3.0		3.0	3.0	
Ped/Bike/RTOR Volume	0			0		0	0	0	0			
Lane Width				10.0		14.0		15.0		10.0	15.0	
Parking/Grade/Parking	N		N	N	0	N	N	0	N	N	0	N
Parking/hr												
Bus stops/hr				0		0		0		0	0	
Unit Extension				3.0		3.0		3.0		3.0	3.0	

Phasing	WB Only	02	03	04	SB Only	Thru & RT	07	08
Timing	G = 24.0	G =	G =	G =	G = 23.0	G = 58.0	G =	G =
	Y = 5	Y =	Y =	Y =	Y = 5	Y = 5	Y =	Y =

Duration of Analysis (hrs) = 0.25 | Cycle Length C = 120.0

Lane Group Capacity, Control Delay, and LOS Determination

	EB			WB			NB			SB		
Adj. flow rate				201		148		1273		127	1276	
Lane group cap.				313		320		1966		300	2943	
v/c ratio				0.64		0.46		0.65		0.42	0.43	
Green ratio				0.20		0.20		0.48		0.19	0.72	
Unif. delay d1				44.1		42.3		23.3		42.7	7.0	
Delay factor k				0.22		0.11		0.23		0.11	0.11	
Increm. delay d2				4.4		1.1		0.8		1.0	0.1	
PF factor				0.833		0.833		0.376		0.842	0.176	
Control delay				41.2		36.3		9.5		36.9	1.3	
Lane group LOS				D		D		A		D	A	
Apprch. delay				39.1			9.5			4.6		
Approach LOS				D			A			A		
Intersec. delay	10.6			Intersection LOS						B		

Copyright © 2000 University of Florida, All Rights Reserved

2-P EX+P

SHORT REPORT

General Information		Site Information	
Analyst	USAI	Intersection	RHO. STA. FE DR./LAKE SAN MARC
Agency or Co.	USAI	Area Type	All other areas
Date Performed	09/05/08	Jurisdiction	SAN MARCOS
Time Period	PM PEAK HOUR	Analysis Year	EXISTING PLUS PROJECT

Volume and Timing Input

	EB			WB			NB			SB		
	LT	TH	RT	LT	TH	RT	LT	TH	RT	LT	TH	RT
Num. of Lanes	0	0	0	1	0	1	0	2	0	1	2	0
Lane group				L		R		TR		L	T	
Volume (vph)				129		135		1465	166	265	1015	
% Heavy veh				2		2		2	2	2	2	
PHF				0.95		0.95		0.95	0.95	0.95	0.95	
Actuated (P/A)				A		A		A	A	A	A	
Startup lost time				2.0		2.0		2.0		2.0	2.0	
Ext. eff. green				2.0		2.0		2.0		2.0	2.0	
Arrival type				5		5		5		5	5	
Unit Extension				3.0		3.0		3.0		3.0	3.0	
Ped/Bike/RTOR Volume	0			0		0	0	0	0			
Lane Width				10.0		14.0		15.0		10.0	15.0	
Parking/Grade/Parking	N		N	N	0	N	N	0	N	N	0	N
Parking/hr												
Bus stops/hr				0		0		0		0	0	
Unit Extension				3.0		3.0		3.0		3.0	3.0	

Phasing	WB Only	02	03	04	SB Only	Thru & RT	07	08
Timing	G = 15.0	G =	G =	G =	G = 23.0	G = 58.0	G =	G =
	Y = 5	Y =	Y =	Y =	Y = 5	Y = 5	Y =	Y =

Duration of Analysis (hrs) = 0.25 | Cycle Length C = 111.0

Lane Group Capacity, Control Delay, and LOS Determination

	EB			WB			NB			SB		
Adj. flow rate				136		142		1717		279	1068	
Lane group cap.				211		216		2113		324	3182	
v/c ratio				0.64		0.66		0.81		0.86	0.34	
Green ratio				0.14		0.14		0.52		0.21	0.77	
Unif. delay d1				45.5		45.6		22.0		42.5	3.8	
Delay factor k				0.22		0.23		0.35		0.39	0.11	
Increm. delay d2				6.6		7.1		2.5		20.4	0.1	
PF factor				0.896		0.896		0.270		0.826	0.222	
Control delay				47.4		47.9		8.5		55.4	0.9	
Lane group LOS				D		D		A		E	A	
Apprch. delay				47.6			8.5			12.2		
Approach LOS				D			A			B		
Intersec. delay	13.2			Intersection LOS						B		

HCS2000™ Copyright © 2000 University of Florida, All Rights Reserved Version 4.1f

3A EXTP

SHORT REPORT

General Information		Site Information	
Analyst	USAI	Intersection	RHO. STA. FE DR./CAM DEL ARROY
Agency or Co.	USAI	Area Type	All other areas
Date Performed	09/05/08	Jurisdiction	SAN MARCOS
Time Period	AM PEAK HOUR	Analysis Year	EXISTING PLUS PROJECT

Volume and Timing Input

	EB			WB			NB			SB		
	LT	TH	RT	LT	TH	RT	LT	TH	RT	LT	TH	RT
Num. of Lanes	0	1	0	0	1	0	1	2	0	1	2	0
Lane group		LTR			LTR		L	TR		L	TR	
Volume (vph)	30	3	60	102	2	39	20	1208	30	48	1374	15
% Heavy veh	2	2	2	2	2	2	2	2	2	2	2	2
PHF	0.95	0.95	0.95	0.95	0.95	0.95	0.95	0.95	0.95	0.95	0.95	0.95
Actuated (P/A)	A	A	A	A	A	A	A	A	A	A	A	A
Startup lost time		2.0			2.0		2.0	2.0		2.0	2.0	
Ext. eff. green		2.0			2.0		2.0	2.0		2.0	2.0	
Arrival type		5			5		5	5		5	5	
Unit Extension		3.0			3.0		3.0	3.0		3.0	3.0	
Ped/Bike/RTOR Volume	0	0	0	0	0	0	0	0	0	0	0	0
Lane Width		12.0			12.0		12.0	12.0		12.0	12.0	
Parking/Grade/Parking	N	0	N	N	0	N	N	0	N	N	0	N
Parking/hr												
Bus stops/hr		0			0		0	0		0	0	
Unit Extension		3.0			3.0		3.0	3.0		3.0	3.0	

Phasing	EW Perm	02	03	04	Excl. Left	Thru & RT	07	08
Timing	G = 15.0	G =	G =	G =	G = 18.0	G = 52.0	G =	G =
	Y = 5	Y =	Y =	Y =	Y = 5	Y = 5	Y =	Y =
Duration of Analysis (hrs) = 0.25						Cycle Length C = 100.0		

Lane Group Capacity, Control Delay, and LOS Determination

	EB			WB			NB			SB		
Adj. flow rate		98			150		21	1304		51	1462	
Lane group cap.		211			190		302	1934		302	1938	
v/c ratio		0.46			0.79		0.07	0.67		0.17	0.75	
Green ratio		0.15			0.15		0.18	0.52		0.18	0.52	
Unif. delay d1		38.8			41.0		34.0	17.7		34.7	19.0	
Delay factor k		0.11			0.34		0.11	0.25		0.11	0.31	
Increm. delay d2		1.6			19.7		0.1	0.9		0.3	1.7	
PF factor		0.882			0.882		0.854	0.278		0.854	0.278	
Control delay		35.9			55.9		29.2	5.9		29.9	7.0	
Lane group LOS		D			E		C	A		C	A	
Apprch. delay	35.9			55.9			6.2			7.8		
Approach LOS	D			E			A			A		
Intersec. delay	10.3			Intersection LOS						B		

Copyright © 2000 University of Florida, All Rights Reserved

3P EXIP

SHORT REPORT

General Information		Site Information	
Analyst	USAI	Intersection	RHO. STA. FE DR./CAM DEL ARROY
Agency or Co.	USAI	Area Type	All other areas
Date Performed	09/05/08	Jurisdiction	SAN MARCOS
Time Period	PM PEAK HOUR	Analysis Year	EXISTING PLUS PROJECT

Volume and Timing Input

	EB			WB			NB			SB		
	LT	TH	RT	LT	TH	RT	LT	TH	RT	LT	TH	RT
Num. of Lanes	0	1	0	0	1	0	1	2	0	1	2	0
Lane group		LTR			LTR		L	TR		L	TR	
Volume (vph)	32	2	14	42	0	39	40	1584	55	32	1096	25
% Heavy veh	2	2	2	2	2	2	2	2	2	2	2	2
PHF	0.95	0.95	0.95	0.95	0.95	0.95	0.95	0.95	0.95	0.95	0.95	0.95
Actuated (P/A)	A	A	A	A	A	A	A	A	A	A	A	A
Startup lost time		2.0			2.0		2.0	2.0		2.0	2.0	
Ext. eff. green		2.0			2.0		2.0	2.0		2.0	2.0	
Arrival type		5			5		5	5		5	5	
Unit Extension		3.0			3.0		3.0	3.0		3.0	3.0	
Ped/Bike/RTOR Volume	0	0	0	0	0	0	0	0	0	0	0	0
Lane Width		12.0			12.0		12.0	12.0		12.0	12.0	
Parking/Grade/Parking	N	0	N	N	0	N	N	0	N	N	0	N
Parking/hr												
Bus stops/hr		0			0		0	0		0	0	
Unit Extension		3.0			3.0		3.0	3.0		3.0	3.0	

Phasing	EW Perm	02	03	04	Excl. Left	Thru & RT	07	08
Timing	G = 15.0	G =	G =	G =	G = 18.0	G = 52.0	G =	G =
	Y = 5	Y =	Y =	Y =	Y = 5	Y = 5	Y =	Y =
Duration of Analysis (hrs) = 0.25						Cycle Length C = 100.0		

Lane Group Capacity, Control Delay, and LOS Determination

	EB			WB			NB			SB		
Adj. flow rate		51			85		42	1725		34	1180	
Lane group cap.		199			203		302	1932		302	1935	
v/c ratio		0.26			0.42		0.14	0.89		0.11	0.61	
Green ratio		0.15			0.15		0.18	0.52		0.18	0.52	
Unif. delay d1		37.6			38.5		34.5	21.5		34.3	16.9	
Delay factor k		0.11			0.11		0.11	0.42		0.11	0.20	
Increm. delay d2		0.7			1.4		0.2	5.8		0.2	0.6	
PF factor		0.882			0.882		0.854	0.278		0.854	0.278	
Control delay		33.8			35.4		29.6	11.7		29.5	5.3	
Lane group LOS		C			D		C	B		C	A	
Apprch. delay	33.8			35.4			12.2			5.9		
Approach LOS	C			D			B			A		
Intersec. delay	10.7			Intersection LOS						B		

HCS2000™ Copyright © 2000 University of Florida, All Rights Reserved Version 4.1f

4-A
EXHB

SHORT REPORT

General Information		Site Information	
Analyst	USAI	Intersection	RHO. STA. FE DR./ISLAND DR.
Agency or Co.	USAI	Area Type	All other areas
Date Performed	09/05/08	Jurisdiction	SAN MARCOS
Time Period	AM PEAK HOUR	Analysis Year	EXISTING PLUS PROJECT

Volume and Timing Input

	EB			WB			NB			SB		
	LT	TH	RT	LT	TH	RT	LT	TH	RT	LT	TH	RT
Num. of Lanes	1	0	1	0	0	0	1	2	0	0	2	0
Lane group	L		R				L	T			TR	
Volume (vph)	19		31				23	1167			1584	16
% Heavy veh	2		2				2	2			2	2
PHF	0.95		0.95				0.95	0.95			0.95	0.95
Actuated (P/A)	A	A	A				A	A	A		A	A
Startup lost time	2.0		2.0				2.0	2.0			2.0	
Ext. eff. green	2.0		2.0				2.0	2.0			2.0	
Arrival type	5		5				5	5			5	
Unit Extension	3.0		3.0				3.0	3.0			3.0	
Ped/Bike/RTOR Volume	0	0	0	0						0	0	0
Lane Width	10.0		10.0				12.0	12.0			12.0	
Parking/Grade/Parking	N	0	N	N		N	N	0	N	N	0	N
Parking/hr												
Bus stops/hr	0		0				0	0			0	
Unit Extension	3.0		3.0				3.0	3.0			3.0	

Phasing	EB Only	02	03	04	NB Only	Thru & RT	07	08
Timing	G = 8.0	G =	G =	G =	G = 19.0	G = 70.0	G =	G =
	Y = 5	Y =	Y =	Y =	Y = 5	Y = 5	Y =	Y =
Duration of Analysis (hrs) = 0.25						Cycle Length C = 112.0		

Lane Group Capacity, Control Delay, and LOS Determination

	EB			WB			NB			SB		
Adj. flow rate	20		33				24	1228			1684	
Lane group cap.	112		100				284	3133			2330	
v/c ratio	0.18		0.33				0.08	0.39			0.72	
Green ratio	0.07		0.07				0.17	0.84			0.63	
Unif. delay d1	48.9		49.5				39.2	2.2			14.4	
Delay factor k	0.11		0.11				0.11	0.11			0.28	
Increm. delay d2	0.8		1.9				0.1	0.1			1.1	
PF factor	0.949		0.949				0.864	0.311			0.133	
Control delay	47.2		48.9				34.0	0.8			3.0	
Lane group LOS	D		D				C	A			A	
Apprch. delay	48.2						1.4			3.0		
Approach LOS	D						A			A		
Intersec. delay	3.2			Intersection LOS						A		

HCS2000™ Copyright © 2000 University of Florida, All Rights Reserved Version 4.1f

A-P EXTP

SHORT REPORT

General Information		Site Information	
Analyst	USAI	Intersection	RHO. STA. FE DR./ISLAND DR.
Agency or Co.	USAI	Area Type	All other areas
Date Performed	09/05/08	Jurisdiction	SAN MARCOS
Time Period	PM PEAK HOUR	Analysis Year	EXISTING PLUS PROJECT

Volume and Timing Input

	EB			WB			NB			SB		
	LT	TH	RT	LT	TH	RT	LT	TH	RT	LT	TH	RT
Num. of Lanes	1	0	1	0	0	0	1	2	0	0	2	0
Lane group	L		R				L	T			TR	
Volume (vph)	58		29				28	1618			1110	26
% Heavy veh	2		2				2	2			2	2
PHF	0.95		0.95				0.95	0.95			0.95	0.95
Actuated (P/A)	A	A	A				A	A	A		A	A
Startup lost time	2.0		2.0				2.0	2.0			2.0	
Ext. eff. green	2.0		2.0				2.0	2.0			2.0	
Arrival type	5		5				5	5			5	
Unit Extension	3.0		3.0				3.0	3.0			3.0	
Ped/Bike/RTOR Volume	0	0	0	0						0	0	0
Lane Width	10.0		10.0				12.0	12.0			12.0	
Parking/Grade/Parking	N	0	N	N		N	N	0	N	N	0	N
Parking/hr												
Bus stops/hr	0		0				0	0			0	
Unit Extension	3.0		3.0				3.0	3.0			3.0	

Phasing	EB Only	02	03	04	NB Only	Thru & RT	07	08
Timing	G = 8.0	G =	G =	G =	G = 19.0	G = 70.0	G =	G =
	Y = 5	Y =	Y =	Y =	Y = 5	Y = 5	Y =	Y =
Duration of Analysis (hrs) = 0.25						Cycle Length C = 112.0		

Lane Group Capacity, Control Delay, and LOS Determination

	EB			WB			NB			SB		
Adj. flow rate	61		31				29	1703			1195	
Lane group cap.	112		100				284	3133			2326	
v/c ratio	0.54		0.31				0.10	0.54			0.51	
Green ratio	0.07		0.07				0.17	0.84			0.63	
Unif. delay d1	50.2		49.4				39.3	2.7			11.6	
Delay factor k	0.14		0.11				0.11	0.14			0.12	
Increm. delay d2	5.4		1.8				0.2	0.2			0.2	
PF factor	0.949		0.949				0.864	0.311			0.133	
Control delay	53.1		48.6				34.1	1.0			1.7	
Lane group LOS	D		D				C	A			A	
Apprch. delay	51.6						1.6			1.7		
Approach LOS	D						A			A		
Intersec. delay	3.2			Intersection LOS						A		

HCS2000™ Copyright © 2000 University of Florida, All Rights Reserved Version 4.1f

10-A EXIST. +P

SHORT REPORT

General Information		Site Information	
Analyst	USAI	Intersection	RANCHO S. FE./MELROSE DR.
Agency or Co.	SAN DIEGO	Area Type	All other areas
Date Performed	09/05/08	Jurisdiction	SAN MARCOS
Time Period	AM PEAK HOUR	Analysis Year	EXISTING PLUS PROJECT

Volume and Timing Input

	EB			WB			NB			SB		
	LT	TH	RT	LT	TH	RT	LT	TH	RT	LT	TH	RT
Num. of Lanes	2	2	2	2	2	0	2	3	0	2	3	2
Lane group	L	T	R	L	TR		L	TR		L	T	R
Volume (vph)	188	229	676	38	316	140	280	577	24	143	1419	258
% Heavy veh	2	2	2	2	2	2	2	2	2	2	2	2
PHF	0.95	0.95	0.95	0.95	0.95	0.95	0.95	0.95	0.95	0.95	0.95	0.95
Actuated (P/A)	A	A	A	A	A	A	A	A	A	A	A	A
Startup lost time	3.0	2.0	2.0	3.0	3.0		3.0	3.0		3.0	3.0	2.0
Ext. eff. green	2.0	2.0	2.0	2.0	2.0		2.0	2.0		2.0	2.0	2.0
Arrival type	5	5	5	5	5		5	5		5	5	5
Unit Extension	3.0	3.0	3.0	3.0	3.0		3.0	3.0		3.0	3.0	3.0
Ped/Bike/RTOR Volume	0	0	0	0	0	50	0	0	0	0	0	50
Lane Width	12.0	12.0	12.0	12.0	12.0		12.0	12.0		12.0	12.0	12.0
Parking/Grade/Parking	N	0	N	N	0	N	N	0	N	N	0	N
Parking/hr												
Bus stops/hr	0	0	0	0	0		0	0		0	0	0
Unit Extension	3.0	3.0	3.0	3.0	3.0		3.0	3.0		3.0	3.0	3.0

Phasing	Excl. Left	EB Only	Thru & RT	04	Excl. Left	Thru & RT	07	08
Timing	G = 15.0	G = 10.0	G = 20.0	G = 0.0	G = 13.0	G = 37.0	G = 0.0	G = 0.0
	Y = 5	Y = 5	Y = 5	Y =	Y = 5	Y = 5	Y = 0	Y =

Duration of Analysis (hrs) = 0.25 | Cycle Length C = 120.0

Lane Group Capacity, Control Delay, and LOS Determination

	EB			WB			NB			SB		
Adj. flow rate	198	241	712	40	428		295	632		151	1494	219
Lane group cap.	787	1089	1173	401	571		326	1593		326	1602	1593
v/c ratio	0.25	0.22	0.61	0.10	0.75		0.90	0.40		0.46	0.93	0.14
Green ratio	0.24	0.29	0.44	0.12	0.16		0.10	0.30		0.10	0.30	0.60
Unif. delay d1	36.7	32.2	25.6	47.4	48.2		53.4	33.4		51.0	40.8	10.5
Delay factor k	0.11	0.11	0.19	0.11	0.30		0.43	0.11		0.11	0.45	0.11
Increm. delay d2	0.2	0.1	0.9	0.1	5.5		27.3	0.2		1.0	10.4	0.0
PF factor	0.788	0.725	0.473	0.912	0.875		0.926	0.714		0.926	0.714	0.125
Control delay	29.1	23.5	13.0	43.3	47.7		76.8	24.0		48.2	39.5	1.3
Lane group LOS	C	C	B	D	D		E	C		D	D	A
Apprch. delay	18.0			47.3			40.8			35.7		
Approach LOS	B			D			D			D		
Intersec. delay	33.4			Intersection LOS						C		

Copyright © 2000 University of Florida, All Rights Reserved

HCS2000: Signalized Intersections Release 4.1f

10-A EXIST.+P

David Heveron
Urban Systems Inc.
4540 Kearny Villa Rd.
San Diego Ca 92123

Phone: 858-560-4911 Fax:
E-Mail:

OPERATIONAL ANALYSIS

Analyst: USAI
Agency/Co.: SAN DIEGO
Date Performed: 09/05/08
Analysis Time Period: AM PEAK HOUR
Intersection: RANCHO S. FE./MELROSE DR.
Area Type: All other areas
Jurisdiction: SAN MARCOS
Analysis Year: EXISTING PLUS PROJECT
Project ID: LA COSTA TOWN SQUARE
E/W St: MELROSE DR. N/S St: RSF

VOLUME DATA

	Eastbound			Westbound			Northbound			Southbound		
	L	T	R	L	T	R	L	T	R	L	T	R
Volume	188	229	676	38	316	140	280	577	24	143	1419	258
% Heavy Veh	2	2	2	2	2	2	2	2	2	2	2	2
PHF	0.95	0.95	0.95	0.95	0.95	0.95	0.95	0.95	0.95	0.95	0.95	0.95
PK 15 Vol	49	60	178	10	83	37	74	152	6	38	373	68
Hi Ln Vol												
% Grade		0			0			0			0	
Ideal Sat	1800	2000	1800	1900	2000		1800	2000		1800	2000	1800
ParkExist												
NumPark												
No. Lanes	2	2	2	2	2	0	2	3	0	2	3	2
LGConfig	L	T	R	L	TR		L	TR		L	T	R
Lane Width	12.0	12.0	12.0	12.0	12.0		12.0	12.0		12.0	12.0	12.0
RTOR Vol			0			50			0			50
Adj Flow	198	241	712	40	428		295	632		151	1494	219
%InSharedLn												
Prop LTs		0.000			0.000			0.000			0.000	
Prop RTs		0.000	1.000		0.222			0.040			0.000	1.000
Peds Bikes	0		0	0		0	0		0	0		0
Buses	0	0	0	0	0		0	0		0	0	0
%InProtPhase			0.0									0.0

Duration 0.25 Area Type: All other areas

OPERATING PARAMETERS

	Eastbound			Westbound			Northbound			Southbound		
	L	T	R	L	T	R	L	T	R	L	T	R
Init Unmet	0.0	0.0	0.0	0.0	0.0		0.0	0.0		0.0	0.0	0.0
Arriv. Type	5	5	5	5	5		5	5		5	5	5
Unit Ext.	3.0	3.0	3.0	3.0	3.0		3.0	3.0		3.0	3.0	3.0
I Factor		1.000			1.000			1.000			1.000	
Lost Time	3.0	2.0	2.0	3.0	3.0		3.0	3.0		3.0	3.0	2.0
Ext of g	2.0	2.0	2.0	2.0	2.0		2.0	2.0		2.0	2.0	2.0
Ped Min g		3.2			3.2			3.2			3.2	

10-P EXIST. +P

SHORT REPORT

General Information		Site Information	
Analyst	USAI	Intersection	RANCHO S. FE/MELROSE DR.
Agency or Co.	SAN DIEGO	Area Type	All other areas
Date Performed	09/05/08	Jurisdiction	SAN MARCOS
Time Period	PM PEAK HOUR	Analysis Year	EXISTING PLUS PROJECT

Volume and Timing Input

	EB			WB			NB			SB		
	LT	TH	RT	LT	TH	RT	LT	TH	RT	LT	TH	RT
Num. of Lanes	2	2	2	2	2	0	2	3	0	2	3	2
Lane group	L	T	R	L	TR		L	TR		L	T	R
Volume (vph)	281	287	574	74	246	192	608	1189	68	148	775	177
% Heavy veh	2	2	2	2	2	2	2	2	2	2	2	2
PHF	0.95	0.95	0.95	0.95	0.95	0.95	0.95	0.95	0.95	0.95	0.95	0.95
Actuated (P/A)	A	A	A	A	A	A	A	A	A	A	A	A
Startup lost time	3.0	2.0	2.0	3.0	3.0		3.0	3.0		3.0	3.0	2.0
Ext. eff. green	2.0	2.0	2.0	2.0	2.0		2.0	2.0		2.0	2.0	2.0
Arrival type	5	5	5	5	5		5	5		5	5	5
Unit Extension	3.0	3.0	3.0	3.0	3.0		3.0	3.0		3.0	3.0	3.0
Ped/Bike/RTOR Volume	0	0	0	0	0	50	0	0	0	0	0	50
Lane Width	12.0	12.0	12.0	12.0	12.0		12.0	12.0		12.0	12.0	12.0
Parking/Grade/Parking	N	0	N	N	0	N	N	0	N	N	0	N
Parking/hr												
Bus stops/hr	0	0	0	0	0		0	0		0	0	0
Unit Extension	3.0	3.0	3.0	3.0	3.0		3.0	3.0		3.0	3.0	3.0

Phasing	Excl. Left	EB Only	Thru & RT	04	Excl. Left	NB Only	Thru & RT	08
Timing	G = 15.0	G = 14.0	G = 18.0	G = 0.0	G = 11.0	G = 9.0	G = 23.0	G = 0.0
	Y = 5	Y = 5	Y = 5	Y =	Y = 5	Y = 5	Y = 5	Y =

Duration of Analysis (hrs) = 0.25 | Cycle Length C = 120.0

Lane Group Capacity, Control Delay, and LOS Determination

	EB			WB			NB			SB		
Adj. flow rate	296	302	604	78	408		640	1324		156	816	134
Lane group cap.	895	1151	1173	380	500		651	1589		271	979	951
v/c ratio	0.33	0.26	0.51	0.21	0.82		0.98	0.83		0.58	0.83	0.14
Green ratio	0.28	0.31	0.44	0.12	0.14		0.20	0.30		0.08	0.18	0.36
Unif. delay d1	34.7	31.2	24.2	48.0	50.0		47.8	39.2		53.0	47.2	26.0
Delay factor k	0.11	0.11	0.12	0.11	0.36		0.49	0.37		0.17	0.37	0.11
Increm. delay d2	0.2	0.1	0.4	0.3	10.1		30.9	4.0		3.0	6.3	0.1
PF factor	0.747	0.703	0.473	0.912	0.890		0.833	0.714		0.939	0.850	0.628
Control delay	26.1	22.1	11.8	44.0	54.6		70.7	32.0		52.7	46.5	16.4
Lane group LOS	C	C	B	D	D		E	C		D	D	B
Apprch. delay	17.9			52.9			44.6			43.7		
Approach LOS	B			D			D			D		
Intersec. delay	38.5			Intersection LOS						D		

Copyright © 2000 University of Florida, All Rights Reserved

HCS2000: Signalized Intersections Release 4.1f

David Heveron
Urban Systems Inc.
4540 Kearny Villa Rd.
San Diego Ca 92123

Phone: 858-560-4911 Fax:
E-Mail:

10-P
EXIST.
+
P

OPERATIONAL ANALYSIS

Analyst: USAI
Agency/Co.: SAN DIEGO
Date Performed: 09/05/08
Analysis Time Period: PM PEAK HOUR
Intersection: RANCHO S. FE/MELROSE DR.
Area Type: All other areas
Jurisdiction: SAN MARCOS
Analysis Year: EXISTING PLUS PROJECT
Project ID: LA COSTA TOWN SQUARE
E/W St: MELROSE DR. N/S St: RSF

VOLUME DATA

	Eastbound			Westbound			Northbound			Southbound		
	L	T	R	L	T	R	L	T	R	L	T	R
Volume	281	287	574	74	246	192	608	1189	68	148	775	177
% Heavy Veh	2	2	2	2	2	2	2	2	2	2	2	2
PHF	0.95	0.95	0.95	0.95	0.95	0.95	0.95	0.95	0.95	0.95	0.95	0.95
PK 15 Vol	74	76	151	19	65	51	160	313	18	39	204	47
Hi Ln Vol												
% Grade		0			0			0			0	
Ideal Sat	1800	2000	1800	1800	2000		1800	2000		1800	2000	1800
ParkExist												
NumPark												
No. Lanes	2	2	2	2	2	0	2	3	0	2	3	2
LGConfig	L	T	R	L	TR		L	TR		L	T	R
Lane Width	12.0	12.0	12.0	12.0	12.0		12.0	12.0		12.0	12.0	12.0
RTOR Vol			0			50			0			50
Adj Flow	296	302	604	78	408		640	1324		156	816	134
%InSharedLn												
Prop LTs		0.000			0.000			0.000			0.000	
Prop RTs		0.000	1.000		0.365			0.054			0.000	1.000
Peds Bikes	0		0	0		0	0		0	0		0
Buses	0	0	0	0	0		0	0		0	0	0
%InProtPhase			0.0									0.0

Duration 0.25 Area Type: All other areas

OPERATING PARAMETERS

	Eastbound			Westbound			Northbound			Southbound		
	L	T	R	L	T	R	L	T	R	L	T	R
Init Unmet	0.0	0.0	0.0	0.0	0.0		0.0	0.0		0.0	0.0	0.0
Arriv. Type	5	5	5	5	5		5	5		5	5	5
Unit Ext.	3.0	3.0	3.0	3.0	3.0		3.0	3.0		3.0	3.0	3.0
I Factor		1.000			1.000			1.000			1.000	
Lost Time	3.0	2.0	2.0	3.0	3.0		3.0	3.0		3.0	3.0	2.0
Ext of g	2.0	2.0	2.0	2.0	2.0		2.0	2.0		2.0	2.0	2.0
Ped Min g		33.2			33.2			22.0			33.2	

17-A EXTP

ALL-WAY STOP CONTROL ANALYSIS

General Information

Analyst	USAI
Agency/Co.	USAI
Date Performed	09/08/08
Analysis Time Period	AM PEAK HOUR

Site Information

Intersection	RSF/EL CAMINO DEL NORTE
Jurisdiction	ENCINITAS
Analysis Year	EXISTING WITH PROJECT

Project ID LA COSTA TOWN SQUARE

East/West Street: CAM DEL NORTE

North/South Street: RANCHO SANTA FE ROAD

Volume Adjustments and Site Characteristics

Approach	Eastbound			Westbound		
Movement	L	T	R	L	T	R
Volume	9	0	7	121	0	155
%Thrus Left Lane	50			50		

Approach	Northbound			Southbound		
Movement	L	T	R	L	T	R
Volume	2	295	81	253	604	2
%Thrus Left Lane	50			50		

	Eastbound		Westbound		Northbound		Southbound	
	L1	L2	L1	L2	L1	L2	L1	L2
Configuration	LTR		L	TR	LT	R	L	TR
PHF	0.95		0.95	0.95	0.95	0.95	0.95	0.95
Flow Rate	16		127	163	312	85	266	637
% Heavy Vehicles	0		0	2	2	2	2	2
No. Lanes	1		2		2		2	
Geometry Group	4b		5		5		5	
Duration, T	0.25							

Saturation Headway Adjustment Worksheet

Prop. Left-Turns	0.6		1.0	0.0	0.0	0.0	1.0	0.0
Prop. Right-Turns	0.4		0.0	1.0	0.0	1.0	0.0	0.0
Prop. Heavy Vehicle								
hLT-adj	0.2	0.2	0.5	0.5	0.5	0.5	0.5	0.5
hRT-adj	-0.6	-0.6	-0.7	-0.7	-0.7	-0.7	-0.7	-0.7
hHV-adj	1.7	1.7	1.7	1.7	1.7	1.7	1.7	1.7
hadj, computed	7.85		7.85	7.85	7.85	7.85	7.85	7.85

Departure Headway and Service Time

hd, initial value	3.20		3.20	3.20	3.20	3.20	3.20	3.20
x, initial	0.01		0.11	0.14	0.28	0.08	0.24	0.57
hd, final value	7.85		7.85	7.85	7.85	7.85	7.85	7.85
x, final value	0.03		0.28	0.31	0.59	0.14	0.50	1.10
Move-up time, m	2.3		2.3		2.3		2.3	
Service Time	5.5		5.5		5.5		5.5	

Capacity and Level of Service

	Eastbound		Westbound		Northbound		Southbound	
	L1	L2	L1	L2	L1	L2	L1	L2
Capacity	266		377	413	521	335	516	637
Delay	10.83		13.73	12.46	18.95	9.85	15.89	91.43
LOS	B		B	B	C	A	C	F
Approach: Delay	10.83		13.02		17.00		69.18	
LOS	B		B		C		F	
Intersection Delay	45.56							
Intersection LOS	E							

Copyright © 2003 University of Florida, All Rights Reserved

17-8 EXTP

ALL-WAY STOP CONTROL ANALYSIS

General Information

Analyst	USAI
Agency/Co.	USAI
Date Performed	09/08/08
Analysis Time Period	PM PEAK HOUR

Site Information

Intersection	RSF/EL CAMINO DEL NORTE
Jurisdiction	ENCINITAS
Analysis Year	EXISTING WITH PROJECT

Project ID LA COSTA TOWN SQUARE

East/West Street: CAM DEL NORTE

North/South Street: RANCHO SANTA FE ROAD

Volume Adjustments and Site Characteristics

Approach	Eastbound			Westbound		
Movement	L	T	R	L	T	R
Volume	5	2	4	100	0	225
%Thrus Left Lane	50			50		

Approach	Northbound			Southbound		
Movement	L	T	R	L	T	R
Volume	12	546	132	146	374	7
%Thrus Left Lane	50			50		

	Eastbound		Westbound		Northbound		Southbound	
	L1	L2	L1	L2	L1	L2	L1	L2
Configuration	LTR		L	TR	LT	R	L	TR
PHF	0.95		0.95	0.95	0.95	0.95	0.95	0.95
Flow Rate	11		105	236	586	138	153	400
% Heavy Vehicles	0		0	2	2	2	2	2
No. Lanes	1		2		2		2	
Geometry Group	4b		5		5		5	
Duration, T	0.25							

Saturation Headway Adjustment Worksheet

Prop. Left-Turns	0.5		1.0	0.0	0.0	0.0	1.0	0.0
Prop. Right-Turns	0.4		0.0	1.0	0.0	1.0	0.0	0.0
Prop. Heavy Vehicle								
hLT-adj	0.2	0.2	0.5	0.5	0.5	0.5	0.5	0.5
hRT-adj	-0.6	-0.6	-0.7	-0.7	-0.7	-0.7	-0.7	-0.7
hHV-adj	1.7	1.7	1.7	1.7	1.7	1.7	1.7	1.7
hadj, computed	8.34		8.34	8.34	8.34	8.34	8.34	8.34

Departure Headway and Service Time

hd, initial value	3.20		3.20	3.20	3.20	3.20	3.20	3.20
x, initial	0.01		0.09	0.21	0.52	0.12	0.14	0.36
hd, final value	8.34		8.34	8.34	8.34	8.34	8.34	8.34
x, final value	0.03		0.24	0.45	1.09	0.23	0.31	0.75
Move-up time, m	2.3		2.3		2.3		2.3	
Service Time	6.0		6.0		6.0		6.0	

Capacity and Level of Service

	Eastbound		Westbound		Northbound		Southbound	
	L1	L2	L1	L2	L1	L2	L1	L2
Capacity	261		355	486	586	388	403	527
Delay	11.26		13.26	15.19	88.90	10.40	13.27	27.44
LOS	B		B	C	F	B	B	D
Approach: Delay	11.26		14.60		73.93		23.52	
LOS	B		B		F		C	
Intersection Delay	43.98							
Intersection LOS	E							

Copyright © 2003 University of Florida, All Rights Reserved

28-A EXTP

SHORT REPORT

General Information		Site Information	
Analyst	USAI	Intersection	I-5 SB ON-OFF RAMP/LEUCADIA BL
Agency or Co.	USAI	Area Type	All other areas
Date Performed	09/08/08	Jurisdiction	ENCINITAS
Time Period	AM PEAK HOUR	Analysis Year	EXISTING PLUS PROJECT

Volume and Timing Input

	EB			WB			NB			SB		
	LT	TH	RT	LT	TH	RT	LT	TH	RT	LT	TH	RT
Num. of Lanes	0	2	1	2	2	0	0	0	0	1	1	1
Lane group		T	R	L	T					L	LT	R
Volume (vph)		598	94	365	519					392	2	141
% Heavy veh		2	2	2	2					2	2	2
PHF		0.95	0.95	0.95	0.95					0.95	0.95	0.95
Actuated (P/A)		A	A	A	A					A	A	A
Startup lost time		2.0	2.0	2.0	2.0					2.0	2.0	2.0
Ext. eff. green		2.0	2.0	2.0	2.0					2.0	2.0	2.0
Arrival type		5	5	5	5					5	5	5
Unit Extension		3.0	3.0	3.0	3.0					3.0	3.0	3.0
Ped/Bike/RTOR Volume	0	0	0				0			0	0	0
Lane Width		12.0	12.0	12.0	12.0					12.0	12.0	12.0
Parking/Grade/Parking	N	0	N	N	0	N	N		N	N	0	N
Parking/hr												
Bus stops/hr		0	0	0	0					0	0	0
Unit Extension		3.0	3.0	3.0	3.0					3.0	3.0	3.0

Phasing	WB Only	Thru & RT	03	04	SB Only	06	07	08
Timing	G = 30.0	G = 30.0	G =	G =	G = 20.0	G =	G =	G =
	Y = 5	Y = 5	Y =	Y =	Y = 5	Y =	Y =	Y =
Duration of Analysis (hrs) = 0.25						Cycle Length C = 95.0		

Lane Group Capacity, Control Delay, and LOS Determination

	EB			WB			NB			SB		
Adj. flow rate		629	99	384	546					314	101	148
Lane group cap.		1179	474	1028	2554					353	354	316
v/c ratio		0.53	0.21	0.37	0.21					0.89	0.29	0.47
Green ratio		0.32	0.32	0.32	0.68					0.21	0.21	0.21
Unif. delay d1		26.7	23.8	25.2	5.5					36.4	31.5	32.8
Delay factor k		0.14	0.11	0.11	0.11					0.41	0.11	0.11
Increm. delay d2		0.5	0.2	0.2	0.0					23.2	0.4	1.1
PF factor		0.692	0.692	0.692	0.158					0.822	0.822	0.822
Control delay		19.0	16.7	17.7	0.9					53.1	26.3	28.1
Lane group LOS		B	B	B	A					D	C	C
Apprch. delay	18.7			7.8						41.7		
Approach LOS	B			A						D		
Intersec. delay	20.0			Intersection LOS						B		

HCS2000™ Copyright © 2000 University of Florida, All Rights Reserved Version 4.1f

28-8 EXIS

SHORT REPORT

General Information		Site Information	
Analyst	USAI	Intersection	I-5 SB ON-OFF RAMP/LEUCADIA BL
Agency or Co.	USAI	Area Type	All other areas
Date Performed	09/08/08	Jurisdiction	ENCINITAS
Time Period	PM PEAK HOUR	Analysis Year	EXISTING PLUS PROJECT

Volume and Timing Input

	EB			WB			NB			SB		
	LT	TH	RT	LT	TH	RT	LT	TH	RT	LT	TH	RT
Num. of Lanes	0	2	1	2	2	0	0	0	0	1	1	1
Lane group		T	R	L	T					L	LT	R
Volume (vph)		694	140	442	669					546	2	148
% Heavy veh		2	0	0	2					0	0	0
PHF		0.95	0.95	0.95	0.95					0.95	0.95	0.95
Actuated (P/A)		A	A	A	A					A	A	A
Startup lost time		2.0	2.0	2.0	2.0					2.0	2.0	2.0
Ext. eff. green		2.0	2.0	2.0	2.0					2.0	2.0	2.0
Arrival type		5	5	5	5					5	5	5
Unit Extension		3.0	3.0	3.0	3.0					3.0	3.0	3.0
Ped/Bike/RTOR Volume	0	0	0				0			0	0	0
Lane Width		12.0	12.0	12.0	12.0					12.0	12.0	12.0
Parking/Grade/Parking	N	0	N	N	0	N	N		N	N	0	N
Parking/hr												
Bus stops/hr		0	0	0	0					0	0	0
Unit Extension		3.0	3.0	3.0	3.0					3.0	3.0	3.0

Phasing	WB Only	Thru & RT	03	04	SB Only	06	07	08
Timing	G = 30.0	G = 30.0	G =	G =	G = 20.0	G =	G =	G =
	Y = 5	Y = 5	Y =	Y =	Y = 5	Y =	Y =	Y =

Duration of Analysis (hrs) = 0.25 Cycle Length C = 95.0

Lane Group Capacity, Control Delay, and LOS Determination

	EB			WB			NB			SB		
Adj. flow rate		731	147	465	704					265	312	156
Lane group cap.		1179	483	1049	2554					360	361	322
v/c ratio		0.62	0.30	0.44	0.28					0.74	0.86	0.48
Green ratio		0.32	0.32	0.32	0.68					0.21	0.21	0.21
Unif. delay d1		27.7	24.6	25.9	5.8					35.0	36.2	33.0
Delay factor k		0.20	0.11	0.11	0.11					0.29	0.39	0.11
Increm. delay d2		1.0	0.4	0.3	0.1					7.7	19.1	1.2
PF factor		0.692	0.692	0.692	0.158					0.822	0.822	0.822
Control delay		20.2	17.4	18.2	1.0					36.5	48.8	28.3
Lane group LOS		C	B	B	A					D	D	C
Apprch. delay	19.7			7.8						40.0		
Approach LOS	B			A						D		
Intersec. delay	20.1			Intersection LOS						C		

Copyright © 2000 University of Florida, All Rights Reserved

29 - A EXTP

SHORT REPORT

General Information		Site Information	
Analyst	USAI	Intersection	I-5 NB OFF RAMP/LEUCADIA BLVD.
Agency or Co.	USAI	Area Type	All other areas
Date Performed	09/08/08	Jurisdiction	ENCINITAS
Time Period	AM PEAK HOUR	Analysis Year	EXISTING PLUS PROJECT

Volume and Timing Input

	EB			WB			NB			SB		
	LT	TH	RT	LT	TH	RT	LT	TH	RT	LT	TH	RT
Num. of Lanes	1	2	0	0	3	0	1	1	2	0	0	0
Lane group	L	T			TR		L	LT	R			
Volume (vph)	207	754			665	411	90	37	306			
% Heavy veh	2	2			2	2	2	2	2			
PHF	0.95	0.95			0.95	0.95	0.95	0.95	0.95			
Actuated (P/A)	A	A			A	A	A	A	A			
Startup lost time	2.0	2.0			2.0		2.0	2.0	2.0			
Ext. eff. green	2.0	2.0			2.0		2.0	2.0	2.0			
Arrival type	5	5			5		5	5	5			
Unit Extension	3.0	3.0			3.0		3.0	3.0	3.0			
Ped/Bike/RTOR Volume				0		200	0		0	0		
Lane Width	12.0	12.0			12.0		12.0	12.0	12.0			
Parking/Grade/Parking	N	0	N	N	0	N	N	0	N	N		N
Parking/hr												
Bus stops/hr	0	0			0		0	0	0			
Unit Extension	3.0	3.0			3.0		3.0	3.0	3.0			

Phasing	EB Only	Thru & RT	03	04	NB Only	06	07	08
Timing	G = 30.0	G = 30.0	G =	G =	G = 15.0	G =	G =	G =
	Y = 5	Y = 5	Y =	Y =	Y = 5	Y =	Y =	Y =
Duration of Analysis (hrs) = 0.25						Cycle Length C = 90.0		

Lane Group Capacity, Control Delay, and LOS Determination

	EB			WB			NB			SB		
Adj. flow rate	218	794			922		95	39	322			
Lane group cap.	559	2696			1716		279	294	443			
v/c ratio	0.39	0.29			0.54		0.34	0.13	0.73			
Green ratio	0.33	0.72			0.33		0.17	0.17	0.17			
Unif. delay d1	23.0	4.4			24.4		33.1	32.0	35.6			
Delay factor k	0.11	0.11			0.14		0.11	0.11	0.29			
Increm. delay d2	0.5	0.1			0.3		0.7	0.2	5.9			
PF factor	0.667	0.180			0.667		0.867	0.867	0.867			
Control delay	15.8	0.9			16.6		29.4	27.9	36.7			
Lane group LOS	B	A			B		C	C	D			
Apprch. delay	4.1			16.6			34.5					
Approach LOS	A			B			C					
Intersec. delay	14.7			Intersection LOS						B		

HCS2000™ Copyright © 2000 University of Florida, All Rights Reserved Version 4.1f

29-P EXTP

SHORT REPORT

General Information		Site Information	
Analyst	USAI	Intersection	I-5 NB OFF RAMP/LEUCADIA BLVD.
Agency or Co.	USAI	Area Type	All other areas
Date Performed	09/08/08	Jurisdiction	ENCINITAS
Time Period	PM PEAK HOUR	Analysis Year	EXISTING PLUS PROJECT

Volume and Timing Input

	EB			WB			NB			SB		
	LT	TH	RT	LT	TH	RT	LT	TH	RT	LT	TH	RT
Num. of Lanes	1	2	0	0	3	0	1	1	2	0	0	0
Lane group	L	T			TR		L	LT	R			
Volume (vph)	199	1006			714	446	147	46	623			
% Heavy veh	2	2			2	2	2	2	2			
PHF	0.95	0.95			0.95	0.95	0.95	0.95	0.95			
Actuated (P/A)	A	A			A	A	A	A	A			
Startup lost time	2.0	2.0			2.0		2.0	2.0	2.0			
Ext. eff. green	2.0	2.0			2.0		2.0	2.0	2.0			
Arrival type	5	5			5		5	5	5			
Unit Extension	3.0	3.0			3.0		3.0	3.0	3.0			
Ped/Bike/RTOR Volume				0		200	0		0	0		
Lane Width	12.0	12.0			12.0		12.0	12.0	12.0			
Parking/Grade/Parking	N	0	N	N	0	N	N	0	N	N		N
Parking/hr												
Bus stops/hr	0	0			0		0	0	0			
Unit Extension	3.0	3.0			3.0		3.0	3.0	3.0			

Phasing	EB Only	Thru & RT	03	04	NB Only	06	07	08
Timing	G = 30.0	G = 30.0	G =	G =	G = 30.0	G =	G =	G =
	Y = 5	Y = 5	Y =	Y =	Y = 5	Y =	Y =	Y =
Duration of Analysis (hrs) = 0.25						Cycle Length C = 105.0		

Lane Group Capacity, Control Delay, and LOS Determination

	EB			WB			NB			SB		
Adj. flow rate	209	1059			1011		155	48	656			
Lane group cap.	479	2311			1467		479	504	759			
v/c ratio	0.44	0.46			0.69		0.32	0.10	0.86			
Green ratio	0.29	0.62			0.29		0.29	0.29	0.29			
Unif. delay d1	30.6	10.6			33.4		29.5	27.5	35.6			
Delay factor k	0.11	0.11			0.26		0.11	0.11	0.39			
Increm. delay d2	0.6	0.1			1.4		0.4	0.1	10.2			
PF factor	0.733	0.131			0.733		0.733	0.733	0.733			
Control delay	23.1	1.5			25.8		22.0	20.3	36.3			
Lane group LOS	C	A			C		C	C	D			
Apprch. delay	5.1			25.8			32.8					
Approach LOS	A			C			C					
Intersec. delay	19.4			Intersection LOS						B		

HCS2000™ Copyright © 2000 University of Florida, All Rights Reserved Version 4.1f

30-A EXHP

SHORT REPORT

General Information		Site Information	
Analyst	USAI	Intersection	LEUCADIA BLVD/URANIA/CLARK AVE. AVE.
Agency or Co.	USAI	Area Type	All other areas
Date Performed	09/08/08	Jurisdiction	ENCINITAS
Time Period	AM PEAK HOUR	Analysis Year	EXISTING PLUS PROJECT

Volume and Timing Input

	EB			WB			NB			SB		
	LT	TH	RT	LT	TH	RT	LT	TH	RT	LT	TH	RT
Num. of Lanes	1	2	0	1	3	0	1	1	0	1	1	0
Lane group	L	TR		L	TR		L	TR		L	TR	
Volume (vph)	30	997	9	16	696	12	25	3	16	223	1	66
% Heavy veh	2	2	2	2	2	2	2	2	2	2	2	2
PHF	0.95	0.95	0.95	0.95	0.95	0.95	0.95	0.95	0.95	0.95	0.95	0.95
Actuated (P/A)	A	A	A	A	A	A	A	A	A	A	A	A
Startup lost time	2.0	2.0		2.0	2.0		2.0	2.0		2.0	2.0	
Ext. eff. green	2.0	2.0		2.0	2.0		2.0	2.0		2.0	2.0	
Arrival type	5	5		5	5		5	5		5	5	
Unit Extension	3.0	3.0		3.0	3.0		3.0	3.0		3.0	3.0	
Ped/Bike/RTOR Volume	0	0	0	0	0	0	0	0	0	0		0
Lane Width	12.0	12.0		12.0	12.0		12.0	12.0		12.0	12.0	
Parking/Grade/Parking	N	0	N	N	0	N	N	0	N	N	0	N
Parking/hr												
Bus stops/hr	0	0		0	0		0	0		0	0	
Unit Extension	3.0	3.0		3.0	3.0		3.0	3.0		3.0	3.0	

Phasing	Excl. Left	Thru & RT	03	04	Excl. Left	Thru & RT	07	08
Timing	G = 10.0	G = 30.0	G = 0.0	G =	G = 20.0	G = 20.0	G = 0.0	G = 0.0
	Y = 5	Y = 5	Y =	Y =	Y = 5	Y = 5	Y = 0	Y =

Duration of Analysis (hrs) = 0.25 | Cycle Length C = 100.0

Lane Group Capacity, Control Delay, and LOS Determination

	EB			WB			NB			SB		
Adj. flow rate	32	1058		17	746		26	20		235	70	
Lane group cap.	168	1119		168	1598		335	342		335	334	
v/c ratio	0.19	0.95		0.10	0.47		0.08	0.06		0.70	0.21	
Green ratio	0.10	0.30		0.10	0.30		0.20	0.20		0.20	0.20	
Unif. delay d1	41.3	34.2		40.9	28.5		32.5	32.4		37.2	33.4	
Delay factor k	0.11	0.46		0.11	0.11		0.11	0.11		0.27	0.11	
Increm. delay d2	0.6	15.6		0.3	0.2		0.1	0.1		6.4	0.3	
PF factor	0.926	0.714		0.926	0.714		0.833	0.833		0.833	0.833	
Control delay	38.8	40.0		38.1	20.6		27.2	27.1		37.5	28.1	
Lane group LOS	D	D		D	C		C	C		D	C	
Apprch. delay	40.0			21.0			27.1			35.3		
Approach LOS	D			C			C			D		
Intersec. delay	32.5			Intersection LOS						C		

HCS2000™ Copyright © 2000 University of Florida, All Rights Reserved Version 4.1f

30-P
EX+P

SHORT REPORT

General Information		Site Information	
Analyst	USAI	Intersection	LEUCADIA BLVD/URANIA AVE. / CLARK AVE
Agency or Co.	USAI	Area Type	All other areas
Date Performed	09/08/08	Jurisdiction	ENCINITAS
Time Period	PM PEAK HOUR	Analysis Year	EXISTING WITH PROJECT

Volume and Timing Input

	EB			WB			NB			SB		
	LT	TH	RT	LT	TH	RT	LT	TH	RT	LT	TH	RT
Num. of Lanes	1	2	0	1	3	0	1	1	0	1	1	0
Lane group	L	TR		L	TR		L	TR		L	TR	
Volume (vph)	48	1701	19	78	1580	34	37	3	9	109	3	40
% Heavy veh	2	2	2	2	2	2	2	2	2	2	2	2
PHF	0.95	0.95	0.95	0.95	0.95	0.95	0.95	0.95	0.95	0.95	0.95	0.95
Actuated (P/A)	A	A	A	A	A	A	A	A	A	A	A	A
Startup lost time	2.0	2.0		2.0	2.0		2.0	2.0		2.0	2.0	
Ext. eff. green	2.0	2.0		2.0	2.0		2.0	2.0		2.0	2.0	
Arrival type	5	5		5	5		5	5		5	5	
Unit Extension	3.0	3.0		3.0	3.0		3.0	3.0		3.0	3.0	
Ped/Bike/RTOR Volume	0	0	0	0	0	0	0	0	0	0		0
Lane Width	12.0	12.0		12.0	12.0		12.0	12.0		12.0	12.0	
Parking/Grade/Parking	N	0	N	N	0	N	N	0	N	N	0	N
Parking/hr												
Bus stops/hr	0	0		0	0		0	0		0	0	
Unit Extension	3.0	3.0		3.0	3.0		3.0	3.0		3.0	3.0	

Phasing	Excl. Left	Thru & RT	03	04	Excl. Left	Thru & RT	07	08
Timing	G = 10.0	G = 55.0	G = 0.0	G =	G = 10.0	G = 10.0	G = 0.0	G = 0.0
	Y = 5	Y = 5	Y =	Y =	Y = 5	Y = 5	Y = 0	Y =
Duration of Analysis (hrs) = 0.25						Cycle Length C = 105.0		

Lane Group Capacity, Control Delay, and LOS Determination

	EB			WB			NB			SB		
Adj. flow rate	51	1811		82	1699		39	12		115	45	
Lane group cap.	160	1952		160	2789		160	166		160	161	
v/c ratio	0.32	0.93		0.51	0.61		0.24	0.07		0.72	0.28	
Green ratio	0.10	0.52		0.10	0.52		0.10	0.10		0.10	0.10	
Unif. delay d1	44.3	23.2		45.2	17.5		44.0	43.3		46.1	44.2	
Delay factor k	0.11	0.44		0.12	0.20		0.11	0.11		0.28	0.11	
Increm. delay d2	1.2	8.4		2.8	0.4		0.8	0.2		14.5	1.0	
PF factor	0.930	0.267		0.930	0.267		0.930	0.930		0.930	0.930	
Control delay	42.4	14.5		44.8	5.1		41.7	40.4		57.4	42.0	
Lane group LOS	D	B		D	A		D	D		E	D	
Apprch. delay	15.3			6.9			41.4			53.1		
Approach LOS	B			A			D			D		
Intersec. delay	13.3			Intersection LOS						B		

HCS2000™ Copyright © 2000 University of Florida, All Rights Reserved Version 4.1f

31-A EXTP

SHORT REPORT

General Information		Site Information	
Analyst	USAI	Intersection	LEUCADIA BLVD/SAXONY RD.
Agency or Co.	USAI	Area Type	All other areas
Date Performed	09/08/08	Jurisdiction	ENCINITAS
Time Period	AM PEAK HOUR	Analysis Year	EXISTING PLUS PROJECT

Volume and Timing Input

	EB			WB			NB			SB		
	LT	TH	RT	LT	TH	RT	LT	TH	RT	LT	TH	RT
Num. of Lanes	1	2	0	1	2	0	1	1	0	1	1	0
Lane group	L	TR		L	TR		L	TR		L	TR	
Volume (vph)	21	844	284	230	994	30	95	44	75	59	173	18
% Heavy veh	2	2	2	2	2	2	2	2	2	2	2	2
PHF	0.95	0.95	0.95	0.95	0.95	0.95	0.95	0.95	0.95	0.95	0.95	0.95
Actuated (P/A)	A	A	A	A	A	A	A	A	A	A	A	A
Startup lost time	2.0	2.0		2.0	2.0		2.0	2.0		2.0	2.0	
Ext. eff. green	2.0	2.0		2.0	2.0		2.0	2.0		2.0	2.0	
Arrival type	5	5		5	5		5	5		5	5	
Unit Extension	3.0	3.0		3.0	3.0		3.0	3.0		3.0	3.0	
Ped/Bike/RTOR Volume	0	0	100	0	0	0	0	0	75	0		0
Lane Width	12.0	12.0		12.0	12.0		12.0	12.0		12.0	12.0	
Parking/Grade/Parking	N	0	N	N	0	N	N	0	N	N	0	N
Parking/hr												
Bus stops/hr	0	0		0	0		0	0		0	0	
Unit Extension	3.0	3.0		3.0	3.0		3.0	3.0		3.0	3.0	

Phasing	Excl. Left	Thru & RT	03	04	Excl. Left	Thru & RT	07	08
Timing	G = 16.0	G = 35.0	G = 0.0	G =	G = 9.0	G = 20.0	G = 0.0	G = 0.0
	Y = 5	Y = 5	Y =	Y =	Y = 5	Y = 5	Y = 0	Y =
Duration of Analysis (hrs) = 0.25						Cycle Length C = 100.0		

Lane Group Capacity, Control Delay, and LOS Determination

	EB			WB			NB			SB		
Adj. flow rate	22	1082		242	1078		100	46		62	201	
Lane group cap.	268	1272		268	1301		151	392		151	387	
v/c ratio	0.08	0.85		0.90	0.83		0.66	0.12		0.41	0.52	
Green ratio	0.16	0.35		0.16	0.35		0.09	0.20		0.09	0.20	
Unif. delay d1	35.7	30.1		41.2	29.8		44.0	32.8		43.0	35.7	
Delay factor k	0.11	0.38		0.42	0.37		0.24	0.11		0.11	0.13	
Increm. delay d2	0.1	5.7		31.0	4.6		10.4	0.1		1.8	1.3	
PF factor	0.873	0.641		0.873	0.641		0.934	0.833		0.934	0.833	
Control delay	31.3	25.0		67.0	23.7		51.5	27.4		42.0	31.0	
Lane group LOS	C	C		E	C		D	C		D	C	
Apprch. delay	25.1			31.6			43.9			33.6		
Approach LOS	C			C			D			C		
Intersec. delay	29.9			Intersection LOS						C		

HCS2000™ Copyright © 2000 University of Florida, All Rights Reserved Version 4.1f

31-P EXHP

SHORT REPORT

General Information		Site Information	
Analyst	USAI	Intersection	LEUCADIA BLVD/SAXONY RD.
Agency or Co.	USAI	Area Type	All other areas
Date Performed	09/08/08	Jurisdiction	ENCINITAS
Time Period	PM PEAK HOUR	Analysis Year	EXISTING PLUS PROJECT

Volume and Timing Input

	EB			WB			NB			SB		
	LT	TH	RT	LT	TH	RT	LT	TH	RT	LT	TH	RT
Num. of Lanes	1	2	0	1	2	0	1	1	0	1	1	0
Lane group	L	TR		L	TR		L	TR		L	TR	
Volume (vph)	34	1517	163	151	1249	50	166	93	201	50	64	23
% Heavy veh	2	2	2	2	2	2	2	2	2	2	2	2
PHF	0.95	0.95	0.95	0.95	0.95	0.95	0.95	0.95	0.95	0.95	0.95	0.95
Actuated (P/A)	A	A	A	A	A	A	A	A	A	A	A	A
Startup lost time	2.0	2.0		2.0	2.0		2.0	2.0		2.0	2.0	
Ext. eff. green	2.0	2.0		2.0	2.0		2.0	2.0		2.0	2.0	
Arrival type	5	5		5	5		4	4		4	4	
Unit Extension	3.0	3.0		3.0	3.0		3.0	3.0		3.0	3.0	
Ped/Bike/RTOR Volume	0	0	100	0	0	0	0	0	75	0		0
Lane Width	12.0	12.0		12.0	12.0		12.0	12.0		12.0	12.0	
Parking/Grade/Parking	N	0	N	N	0	N	N	0	N	N	0	N
Parking/hr												
Bus stops/hr	0	0		0	0		0	0		0	0	
Unit Extension	3.0	3.0		3.0	3.0		3.0	3.0		3.0	3.0	

Phasing	Excl. Left	Thru & RT	03	04	Excl. Left	Thru & RT	07	08
Timing	G = 14.0	G = 51.0	G = 0.0	G =	G = 15.0	G = 20.0	G = 0.0	G = 0.0
	Y = 5	Y = 5	Y =	Y =	Y = 4	Y = 4	Y = 0	Y =

Duration of Analysis (hrs) = 0.25 Cycle Length C = 118.0

Lane Group Capacity, Control Delay, and LOS Determination

	EB			WB			NB			SB		
Adj. flow rate	36	1663		159	1368		175	231		53	91	
Lane group cap.	199	1604		199	1604		213	304		213	319	
v/c ratio	0.18	1.04		0.80	0.85		0.82	0.76		0.25	0.29	
Green ratio	0.12	0.43		0.12	0.43		0.13	0.17		0.13	0.17	
Unif. delay d1	46.8	33.5		50.6	30.1		50.2	46.7		46.4	42.8	
Delay factor k	0.11	0.50		0.34	0.39		0.36	0.31		0.11	0.11	
Increm. delay d2	0.4	32.6		20.2	4.7		22.0	10.7		0.6	0.5	
PF factor	0.910	0.493		0.910	0.493		1.000	1.000		1.000	1.000	
Control delay	43.1	49.1		66.3	19.5		72.2	57.4		47.0	43.3	
Lane group LOS	D	D		E	B		E	E		D	D	
Apprch. delay	49.0			24.4			63.8			44.6		
Approach LOS	D			C			E			D		
Intersec. delay	40.5			Intersection LOS						D		

HCS2000™ Copyright © 2000 University of Florida, All Rights Reserved Version 4.1f

32-A EX+P

SHORT REPORT

General Information		Site Information	
Analyst	USAI	Intersection	LEUCADIA BLVD/SIDONIA ST.
Agency or Co.	USAI	Area Type	All other areas
Date Performed	09/08/08	Jurisdiction	ENCINITAS
Time Period	AM PEAK HOUR	Analysis Year	EXISTING PLUS PROJECT

Volume and Timing Input

	EB			WB			NB			SB		
	LT	TH	RT	LT	TH	RT	LT	TH	RT	LT	TH	RT
Num. of Lanes	1	2	0	0	2	0	0	0	0	1	0	1
Lane group	L	T			TR					L		R
Volume (vph)	28	1110			1325	7				35		13
% Heavy veh	2	2			2	2				2		2
PHF	0.95	0.95			0.95	0.95				0.95		0.95
Actuated (P/A)	A	A			A	A				A		A
Startup lost time	2.0	2.0			2.0					2.0		2.0
Ext. eff. green	2.0	2.0			2.0					2.0		2.0
Arrival type	5	5			5					5		5
Unit Extension	3.0	3.0			3.0					3.0		3.0
Ped/Bike/RTOR Volume				0	0	0	0			0	0	0
Lane Width	12.0	12.0			12.0					12.0		12.0
Parking/Grade/Parking	N	0	N	N	0	N	N		N	N	0	N
Parking/hr												
Bus stops/hr	0	0			0					0		0
Unit Extension	3.0	3.0			3.0					3.0		3.0

Phasing	EB Only	Thru & RT	03	04	SB Only	06	07	08
Timing	G = 25.0	G = 35.0	G = 0.0	G =	G = 10.0	G = 0.0	G = 0.0	G =
	Y = 5	Y = 5	Y =	Y =	Y = 5	Y =	Y =	Y =
Duration of Analysis (hrs) = 0.25						Cycle Length C = 85.0		

Lane Group Capacity, Control Delay, and LOS Determination

	EB			WB			NB			SB		
Adj. flow rate	29	1168			1402					37		14
Lane group cap.	493	2855			1536					197		176
v/c ratio	0.06	0.41			0.91					0.19		0.08
Green ratio	0.29	0.76			0.41					0.12		0.12
Unif. delay d1	21.5	3.4			23.6					33.8		33.4
Delay factor k	0.11	0.11			0.43					0.11		0.11
Increm. delay d2	0.1	0.1			8.7					0.5		0.2
PF factor	0.722	0.213			0.533					0.911		0.911
Control delay	15.6	0.8			21.2					31.3		30.6
Lane group LOS	B	A			C					C		C
Apprch. delay	1.2			21.2						31.1		
Approach LOS	A			C						C		
Intersec. delay	12.4			Intersection LOS						B		

Copyright © 2000 University of Florida, All Rights Reserved

32-P EXTP

SHORT REPORT

General Information		Site Information	
Analyst	USAI	Intersection	LEUCADIA BLVD/SIDONIA ST.
Agency or Co.	USAI	Area Type	All other areas
Date Performed	09/08/08	Jurisdiction	ENCINITAS
Time Period	PM PEAK HOUR	Analysis Year	EXISTING PLUS PROJECT

Volume and Timing Input

	EB			WB			NB			SB		
	LT	TH	RT	LT	TH	RT	LT	TH	RT	LT	TH	RT
Num. of Lanes	1	2	0	0	2	0	0	0	0	1	0	1
Lane group	L	T			TR					L		R
Volume (vph)	35	1800			1432	25				16		8
% Heavy veh	2	2			2	2				2		2
PHF	0.95	0.95			0.95	0.95				0.95		0.95
Actuated (P/A)	A	A			A	A				A		A
Startup lost time	2.0	2.0			2.0					2.0		2.0
Ext. eff. green	2.0	2.0			2.0					2.0		2.0
Arrival type	5	5			5					5		5
Unit Extension	3.0	3.0			3.0					3.0		3.0
Ped/Bike/RTOR Volume				0	0	0	0			0	0	0
Lane Width	12.0	12.0			12.0					12.0		12.0
Parking/Grade/Parking	N	0	N	N	0	N	N		N	N	0	N
Parking/hr												
Bus stops/hr	0	0			0					0		0
Unit Extension	3.0	3.0			3.0					3.0		3.0

Phasing	EB Only	Thru & RT	03	04	SB Only	06	07	08
Timing	G = 25.0	G = 35.0	G = 0.0	G =	G = 10.0	G = 0.0	G = 0.0	G =
	Y = 5	Y = 5	Y =	Y =	Y = 5	Y =	Y =	Y =

Duration of Analysis (hrs) = 0.25 Cycle Length C = 85.0

Lane Group Capacity, Control Delay, and LOS Determination

	EB			WB			NB			SB		
Adj. flow rate	37	1895			1533					17		8
Lane group cap.	493	2855			1533					197		176
v/c ratio	0.08	0.66			1.00					0.09		0.05
Green ratio	0.29	0.76			0.41					0.12		0.12
Unif. delay d1	21.7	4.8			25.0					33.4		33.3
Delay factor k	0.11	0.24			0.50					0.11		0.11
Increm. delay d2	0.1	0.6			23.0					0.2		0.1
PF factor	0.722	0.213			0.533					0.911		0.911
Control delay	15.7	1.6			36.3					30.6		30.4
Lane group LOS	B	A			D					C		C
Apprch. delay	1.9			36.3						30.6		
Approach LOS	A			D						C		
Intersec. delay	17.2			Intersection LOS						B		

HCS2000™ Copyright © 2000 University of Florida, All Rights Reserved Version 4.1f

33-A
EX+P

SHORT REPORT

General Information		Site Information	
Analyst	USAI	Intersection	LEUCADIA BLVD/QUAIL GARDENS DR
Agency or Co.	USAI	Area Type	All other areas
Date Performed	09/08/08	Jurisdiction	ENCINITAS
Time Period	AM PEAK HOUR	Analysis Year	EXISTING WITH PROJECT

Volume and Timing Input

	EB			WB			NB			SB		
	LT	TH	RT	LT	TH	RT	LT	TH	RT	LT	TH	RT
Num. of Lanes	1	2	0	1	2	0	1	1	1	1	1	1
Lane group	L	TR		L	TR		L	T	R	L	T	R
Volume (vph)	30	1491	116	349	1369	16	120	23	40	57	77	10
% Heavy veh	2	2	2	2	2	2	2	2	2	2	2	2
PHF	0.95	0.95	0.95	0.95	0.95	0.95	0.95	0.95	0.95	0.95	0.95	0.95
Actuated (P/A)	A	A	A	A	A	A	A	A	A	A	A	A
Startup lost time	2.0	2.0		2.0	2.0		2.0	2.0	2.0	2.0	2.0	2.0
Ext. eff. green	2.0	2.0		2.0	2.0		2.0	2.0	2.0	2.0	2.0	2.0
Arrival type	5	5		5	5		5	5	5	5	5	5
Unit Extension	3.0	3.0		3.0	3.0		3.0	3.0	3.0	3.0	3.0	3.0
Ped/Bike/RTOR Volume	0		60	0	0	0	0	0	0	0	0	0
Lane Width	12.0	12.0		12.0	12.0		12.0	12.0	12.0	12.0	12.0	12.0
Parking/Grade/Parking	N	0	N	N	0	N	N	0	N	N	0	N
Parking/hr												
Bus stops/hr	0	0		0	0		0	0	0	0	0	0
Unit Extension	3.0	3.0		3.0	3.0		3.0	3.0	3.0	3.0	3.0	3.0

Phasing	Excl. Left	Thru & RT	03	04	Excl. Left	Thru & RT	07	08
Timing	G = 27.0	G = 52.0	G = 0.0	G =	G = 11.0	G = 8.0	G = 0.0	G =
	Y = 5	Y = 5	Y =	Y =	Y = 5	Y = 5	Y =	Y =
Duration of Analysis (hrs) = 0.25						Cycle Length C = 118.0		

Lane Group Capacity, Control Delay, and LOS Determination

	EB			WB			NB			SB		
Adj. flow rate	32	1628		367	1458		126	24	42	60	81	11
Lane group cap.	383	1636		383	1642		156	133	102	156	133	102
v/c ratio	0.08	1.00		0.96	0.89		0.81	0.18	0.41	0.38	0.61	0.11
Green ratio	0.23	0.44		0.23	0.44		0.09	0.07	0.07	0.09	0.07	0.07
Unif. delay d1	35.8	32.9		44.9	30.3		52.5	51.9	52.7	50.3	53.5	51.6
Delay factor k	0.11	0.50		0.47	0.41		0.35	0.11	0.11	0.11	0.20	0.11
Increm. delay d2	0.1	21.0		35.1	6.4		26.1	0.7	2.7	1.6	7.9	0.5
PF factor	0.802	0.475		0.802	0.475		0.931	0.952	0.952	0.931	0.952	0.952
Control delay	28.8	36.6		71.2	20.8		74.9	50.0	52.9	48.4	58.8	49.6
Lane group LOS	C	D		E	C		E	D	D	D	E	D
Apprch. delay	36.5			30.9			67.0			54.0		
Approach LOS	D			C			E			D		
Intersec. delay	36.1			Intersection LOS						D		

HCS2000™ Copyright © 2000 University of Florida, All Rights Reserved Version 4.1f

33 P EXTP

SHORT REPORT

General Information		Site Information	
Analyst	USAI	Intersection	LEUCADIA BLVD/QUAIL GARDENS DR
Agency or Co.	USAI	Area Type	All other areas
Date Performed	09/08/08	Jurisdiction	ENCINITAS
Time Period	PM PEAK HOUR	Analysis Year	EXISTING PLUS PROJECT

Volume and Timing Input

	EB			WB			NB			SB		
	LT	TH	RT	LT	TH	RT	LT	TH	RT	LT	TH	RT
Num. of Lanes	1	2	0	1	2	0	1	1	1	1	1	1
Lane group	L	TR		L	TR		L	T	R	L	T	R
Volume (vph)	10	1998	76	212	1728	50	85	24	161	85	23	32
% Heavy veh	2	2	2	2	2	2	2	2	2	2	2	2
PHF	0.95	0.95	0.95	0.95	0.95	0.95	0.95	0.95	0.95	0.95	0.95	0.95
Actuated (P/A)	A	A	A	A	A	A	A	A	A	A	A	A
Startup lost time	2.0	2.0		2.0	2.0		2.0	2.0	2.0	2.0	2.0	2.0
Ext. eff. green	2.0	2.0		2.0	2.0		2.0	2.0	2.0	2.0	2.0	2.0
Arrival type	5	5		5	5		5	5	5	5	5	5
Unit Extension	3.0	3.0		3.0	3.0		3.0	3.0	3.0	3.0	3.0	3.0
Ped/Bike/RTOR Volume	0		0	0	0	0	0	0	0	0	0	0
Lane Width	12.0	12.0		12.0	12.0		12.0	12.0	12.0	12.0	12.0	12.0
Parking/Grade/Parking	N	0	N	N	0	N	N	0	N	N	0	N
Parking/hr												
Bus stops/hr	0	0		0	0		0	0	0	0	0	0
Unit Extension	3.0	3.0		3.0	3.0		3.0	3.0	3.0	3.0	3.0	3.0

Phasing	Excl. Left	Thru & RT	03	04	Excl. Left	Thru & RT	07	08
Timing	G = 18.0	G = 66.0	G = 0.0	G =	G = 9.0	G = 7.0	G = 0.0	G =
	Y = 5	Y = 5	Y =	Y =	Y = 5	Y = 5	Y =	Y =

Duration of Analysis (hrs) = 0.25 | Cycle Length C = 120.0

Lane Group Capacity, Control Delay, and LOS Determination

	EB			WB			NB			SB		
Adj. flow rate	11	2183		223	1872		89	25	169	89	24	34
Lane group cap.	251	2042		251	2044		126	114	375	126	114	88
v/c ratio	0.04	1.07		0.89	0.92		0.71	0.22	0.45	0.71	0.21	0.39
Green ratio	0.15	0.55		0.15	0.55		0.08	0.06	0.25	0.08	0.06	0.06
Unif. delay d1	43.6	27.0		50.0	24.5		54.2	53.9	38.0	54.2	53.9	54.4
Delay factor k	0.11	0.50		0.41	0.43		0.27	0.11	0.11	0.27	0.11	0.11
Increm. delay d2	0.1	41.3		29.7	7.0		16.5	1.0	0.9	16.5	0.9	2.8
PF factor	0.882	0.247		0.882	0.185		0.946	0.959	0.778	0.946	0.959	0.959
Control delay	38.6	48.0		73.8	11.6		67.8	52.6	30.4	67.8	52.6	55.0
Lane group LOS	D	D		E	B		E	D	C	E	D	D
Apprch. delay	47.9			18.2			44.2			62.4		
Approach LOS	D			B			D			E		
Intersec. delay	35.0			Intersection LOS						C		

HCS2000™

Copyright © 2000 University of Florida, All Rights Reserved

Version 4.1f

34-A
EX+P

SHORT REPORT

General Information		Site Information	
Analyst	USAI	Intersection	LEUCADIA BLVD/GARDEN VIEW RD.
Agency or Co.	USAI	Area Type	All other areas
Date Performed	09/08/08	Jurisdiction	ENCINITAS
Time Period	AM PEAK HOUR	Analysis Year	EXISTING PLUS PROJECT

Volume and Timing Input

	EB			WB			NB			SB		
	LT	TH	RT	LT	TH	RT	LT	TH	RT	LT	TH	RT
Num. of Lanes	2	2	0	2	2	0	2	2	0	2	2	0
Lane group	L	TR		L	TR		L	TR		L	TR	
Volume (vph)	144	706	297	241	909	19	212	114	31	9	260	281
% Heavy veh	2	2	2	2	2	2	2	2	2	2	2	2
PHF	0.95	0.95	0.95	0.95	0.95	0.95	0.95	0.95	0.95	0.95	0.95	0.95
Actuated (P/A)	A	A	A	A	A	A	A	A	A	A	A	A
Startup lost time	2.0	2.0		2.0	2.0		2.0	2.0		2.0	2.0	
Ext. eff. green	2.0	2.0		2.0	2.0		2.0	2.0		2.0	2.0	
Arrival type	5	5		5	5		5	5		5	5	
Unit Extension	3.0	3.0		3.0	3.0		3.0	3.0		3.0	3.0	
Ped/Bike/RTOR Volume	0		65	0	0	0	0	0	0	0	0	100
Lane Width	12.0	12.0		12.0	12.0		12.0	12.0		12.0	12.0	
Parking/Grade/Parking	N	0	N	N	0	N	N	0	N	N	0	N
Parking/hr												
Bus stops/hr	0	0		0	0		0	0		0	0	
Unit Extension	3.0	3.0		3.0	3.0		3.0	3.0		3.0	3.0	

Phasing	Excl. Left	Thru & RT	03	04	Excl. Left	Thru & RT	07	08
Timing	G = 15.0	G = 50.0	G = 0.0	G =	G = 12.0	G = 20.0	G = 0.0	G =
	Y = 5	Y = 5	Y =	Y =	Y = 4	Y = 4	Y =	Y =

Duration of Analysis (hrs) = 0.25 | Cycle Length C = 115.0

Lane Group Capacity, Control Delay, and LOS Determination

	EB			WB			NB			SB		
Adj. flow rate	152	987		254	977		223	153		9	465	
Lane group cap.	425	1563		433	1650		340	641		340	609	
v/c ratio	0.36	0.63		0.59	0.59		0.66	0.24		0.03	0.76	
Green ratio	0.13	0.43		0.13	0.43		0.10	0.17		0.10	0.17	
Unif. delay d1	45.6	25.3		47.1	24.7		49.5	40.9		46.3	45.2	
Delay factor k	0.11	0.21		0.18	0.18		0.23	0.11		0.11	0.32	
Increm. delay d2	0.5	0.8		1.5	0.4		4.5	0.2		0.0	5.7	
PF factor	0.900	0.487		0.900	0.487		0.922	0.860		0.922	0.860	
Control delay	41.6	13.2		43.8	12.5		50.2	35.4		42.7	44.6	
Lane group LOS	D	B		D	B		D	D		D	D	
Apprch. delay	17.0			18.9			44.2			44.6		
Approach LOS	B			B			D			D		
Intersec. delay	25.0			Intersection LOS						C		

Copyright © 2000 University of Florida, All Rights Reserved

34-P EXTP

SHORT REPORT

General Information		Site Information	
Analyst	USAI	Intersection	LEUCADIA BLVD/GARDEN VIEW RD.
Agency or Co.	USAI	Area Type	All other areas
Date Performed	09/08/08	Jurisdiction	ENCINITAS
Time Period	PM PEAK HOUR	Analysis Year	EXISTING PLUS PROJECT

Volume and Timing Input

	EB			WB			NB			SB		
	LT	TH	RT	LT	TH	RT	LT	TH	RT	LT	TH	RT
Num. of Lanes	2	2	0	2	2	0	2	2	0	2	2	0
Lane group	L	TR		L	TR		L	TR		L	TR	
Volume (vph)	301	1213	321	110	973	84	297	147	53	99	158	221
% Heavy veh	2	2	2	2	2	2	2	2	2	2	2	2
PHF	0.95	0.95	0.95	0.95	0.95	0.95	0.95	0.95	0.95	0.95	0.95	0.95
Actuated (P/A)	A	A	A	A	A	A	A	A	A	A	A	A
Startup lost time	2.0	2.0		2.0	2.0		2.0	2.0		2.0	2.0	
Ext. eff. green	2.0	2.0		2.0	2.0		2.0	2.0		2.0	2.0	
Arrival type	5	5		5	5		5	5		5	5	
Unit Extension	3.0	3.0		3.0	3.0		3.0	3.0		3.0	3.0	
Ped/Bike/RTOR Volume	0		65	0	0	0	0	0	0	0	0	100
Lane Width	12.0	12.0		12.0	12.0		12.0	12.0		12.0	12.0	
Parking/Grade/Parking	N	0	N	N	0	N	N	0	N	N	0	N
Parking/hr												
Bus stops/hr	0	0		0	0		0	0		0	0	
Unit Extension	3.0	3.0		3.0	3.0		3.0	3.0		3.0	3.0	

Phasing	Excl. Left	Thru & RT	03	04	Excl. Left	Thru & RT	07	08
Timing	G = 15.0	G = 50.0	G = 0.0	G =	G = 12.0	G = 18.0	G = 0.0	G =
	Y = 5	Y = 5	Y =	Y =	Y = 5	Y = 5	Y =	Y =

Duration of Analysis (hrs) = 0.25 Cycle Length C = 115.0

Lane Group Capacity, Control Delay, and LOS Determination

	EB			WB			NB			SB		
Adj. flow rate	317	1546		116	1112		313	211		104	293	
Lane group cap.	425	1581		425	1604		340	561		340	546	
v/c ratio	0.75	0.98		0.27	0.69		0.92	0.38		0.31	0.54	
Green ratio	0.13	0.43		0.13	0.43		0.10	0.16		0.10	0.16	
Unif. delay d1	48.2	32.0		45.1	26.3		51.0	43.5		47.6	44.7	
Delay factor k	0.30	0.48		0.11	0.26		0.44	0.11		0.11	0.14	
Increm. delay d2	7.1	17.6		0.3	1.3		29.5	0.4		0.5	1.1	
PF factor	0.900	0.487		0.900	0.487		0.922	0.876		0.922	0.876	
Control delay	50.4	33.1		40.9	14.1		76.5	38.5		44.5	40.2	
Lane group LOS	D	C		D	B		E	D		D	D	
Apprch. delay	36.1			16.7			61.2			41.3		
Approach LOS	D			B			E			D		
Intersec. delay	33.9			Intersection LOS						C		

HCS2000™ Copyright © 2000 University of Florida, All Rights Reserved Version 4.1f

35-A EXIP

SHORT REPORT

General Information		Site Information	
Analyst	USAI	Intersection	LEUCADIA BLVD/TOWN CENTER PL.
Agency or Co.	USAI	Area Type	All other areas
Date Performed	09/08/08	Jurisdiction	ENCINITAS
Time Period	AM PEAK HOUR	Analysis Year	EXISTING PLUS PROJECT

Volume and Timing Input

	EB			WB			NB			SB		
	LT	TH	RT	LT	TH	RT	LT	TH	RT	LT	TH	RT
Num. of Lanes	2	2	1	2	2	1	1	2	0	1	1	1
Lane group	L	T	R	L	T	R	L	LTR		L	LT	R
Volume (vph)	28	624	133	206	986	114	78	14	61	73	10	82
% Heavy veh	2	2	2	2	2	2	2	2	2	2	2	2
PHF	0.95	0.95	0.95	0.95	0.95	0.95	0.95	0.95	0.95	0.95	0.95	0.95
Actuated (P/A)	A	A	A	A	A	A	A	A	A	A	A	A
Startup lost time	2.0	2.0	2.0	2.0	2.0	2.0	2.0	2.0		2.0	2.0	2.0
Ext. eff. green	2.0	2.0	2.0	2.0	2.0	2.0	2.0	2.0		2.0	2.0	2.0
Arrival type	5	5	5	5	5	5	5	5		5	5	5
Unit Extension	3.0	3.0	3.0	3.0	3.0	3.0	3.0	3.0		3.0	3.0	3.0
Ped/Bike/RTOR Volume	0		0	0	0	0	0	0	0	0	0	0
Lane Width	12.0	12.0	12.0	12.0	12.0	12.0	12.0	12.0		12.0	12.0	12.0
Parking/Grade/Parking	N	0	N	N	0	N	N	0	N	N	0	N
Parking/hr												
Bus stops/hr	0	0	0	0	0	0	0	0		0	0	0
Unit Extension	3.0	3.0	3.0	3.0	3.0	3.0	3.0	3.0		3.0	3.0	3.0

Phasing	Excl. Left	Thru & RT	03	04	SB Only	NB Only	07	08
Timing	G = 15.0	G = 50.0	G = 0.0	G =	G = 12.0	G = 20.0	G = 0.0	G =
	Y = 5	Y = 5	Y =	Y =	Y = 5	Y = 5	Y =	Y =
Duration of Analysis (hrs) = 0.25						Cycle Length C = 117.0		

Lane Group Capacity, Control Delay, and LOS Determination

	EB			WB			NB			SB		
Adj. flow rate	29	657	140	217	1038	120	57	104		54	34	86
Lane group cap.	417	1595	641	417	1595	641	286	572		172	194	154
v/c ratio	0.07	0.41	0.22	0.52	0.65	0.19	0.20	0.18		0.31	0.18	0.56
Green ratio	0.13	0.43	0.43	0.13	0.43	0.43	0.17	0.17		0.10	0.10	0.10
Unif. delay d1	44.9	23.3	21.2	47.6	26.6	20.9	41.6	41.5		48.7	48.0	50.0
Delay factor k	0.11	0.11	0.11	0.13	0.23	0.11	0.11	0.11		0.11	0.11	0.16
Increm. delay d2	0.1	0.2	0.2	1.2	1.0	0.1	0.3	0.2		1.1	0.4	4.5
PF factor	0.902	0.502	0.502	0.902	0.502	0.502	0.863	0.863		0.924	0.924	0.924
Control delay	40.5	11.9	10.8	44.1	14.3	10.6	36.2	35.9		46.0	44.8	50.7
Lane group LOS	D	B	B	D	B	B	D	D		D	D	D
Apprch. delay	12.7			18.7			36.1			48.1		
Approach LOS	B			B			D			D		
Intersec. delay	19.9			Intersection LOS						B		

Copyright © 2000 University of Florida, All Rights Reserved

35-P EXTP

SHORT REPORT

General Information		Site Information	
Analyst	USAI	Intersection	LEUCADIA BLVD/TOWN CENTER PL.
Agency or Co.	USAI	Area Type	All other areas
Date Performed	09/08/08	Jurisdiction	ENCINITAS
Time Period	PM PEAK HOUR	Analysis Year	EXISTING PLUS PROJECT

Volume and Timing Input

	EB			WB			NB			SB		
	LT	TH	RT	LT	TH	RT	LT	TH	RT	LT	TH	RT
Num. of Lanes	2	2	1	2	2	1	1	2	0	1	1	1
Lane group	L	T	R	L	T	R	L	LTR		L	LT	R
Volume (vph)	154	969	216	240	725	131	257	56	283	141	49	56
% Heavy veh	2	2	2	2	2	2	2	2	2	2	2	2
PHF	0.95	0.95	0.95	0.95	0.95	0.95	0.95	0.95	0.95	0.95	0.95	0.95
Actuated (P/A)	A	A	A	A	A	A	A	A	A	A	A	A
Startup lost time	2.0	2.0	2.0	2.0	2.0	2.0	2.0	2.0		2.0	2.0	2.0
Ext. eff. green	2.0	2.0	2.0	2.0	2.0	2.0	2.0	2.0		2.0	2.0	2.0
Arrival type	5	5	5	5	5	5	5	5		5	5	5
Unit Extension	3.0	3.0	3.0	3.0	3.0	3.0	3.0	3.0		3.0	3.0	3.0
Ped/Bike/RTOR Volume	0		0	0	0	0	0	0	0	0	0	0
Lane Width	12.0	12.0	12.0	12.0	12.0	12.0	12.0	12.0		12.0	12.0	12.0
Parking/Grade/Parking	N	0	N	N	0	N	N	0	N	N	0	N
Parking/hr												
Bus stops/hr	0	0	0	0	0	0	0	0		0	0	0
Unit Extension	3.0	3.0	3.0	3.0	3.0	3.0	3.0	3.0		3.0	3.0	3.0

Phasing	Excl. Left	Thru & RT	03	04	SB Only	NB Only	07	08
Timing	G = 14.0	G = 51.0	G = 0.0	G =	G = 12.0	G = 20.0	G = 0.0	G =
	Y = 5	Y = 5	Y =	Y =	Y = 5	Y = 5	Y =	Y =

Duration of Analysis (hrs) = 0.25 | Cycle Length C = 117.0

Lane Group Capacity, Control Delay, and LOS Determination

	EB			WB			NB			SB		
Adj. flow rate	162	1020	227	253	763	138	190	438		89	111	59
Lane group cap.	401	1676	673	401	1676	673	286	568		172	196	154
v/c ratio	0.40	0.61	0.34	0.63	0.46	0.21	0.66	0.77		0.52	0.57	0.38
Green ratio	0.12	0.44	0.44	0.12	0.44	0.44	0.17	0.17		0.10	0.10	0.10
Unif. delay d1	47.6	25.3	21.8	49.0	23.2	20.4	45.4	46.3		49.8	50.0	49.0
Delay factor k	0.11	0.19	0.11	0.21	0.11	0.11	0.24	0.32		0.12	0.16	0.11
Increm. delay d2	0.7	0.6	0.3	1.9	0.1	0.1	5.7	6.5		2.7	3.8	1.6
PF factor	0.909	0.485	0.485	0.909	0.485	0.485	0.863	0.863		0.924	0.924	0.924
Control delay	44.0	12.9	10.9	46.5	11.4	10.0	44.8	46.4		48.7	50.0	46.9
Lane group LOS	D	B	B	D	B	B	D	D		D	D	D
Apprch. delay	16.2			18.9			45.9			48.9		
Approach LOS	B			B			D			D		
Intersec. delay	25.0			Intersection LOS						C		

Copyright © 2000 University of Florida, All Rights Reserved

36-A EXHP

SHORT REPORT

General Information		Site Information	
Analyst	USAI	Intersection	ECR/LEUCADIA BLVD.
Agency or Co.	USAI	Area Type	All other areas
Date Performed	09/08/08	Jurisdiction	CARLSBAD
Time Period	AM PEAK HOUR	Analysis Year	EXISTING PLUS PROJECT

Volume and Timing Input

	EB			WB			NB			SB		
	LT	TH	RT	LT	TH	RT	LT	TH	RT	LT	TH	RT
Num. of Lanes	2	3	1	2	3	0	2	3	1	2	4	0
Lane group	L	T	R	L	TR		L	T	R	L	TR	
Volume (vph)	126	576	203	1096	1084	83	94	411	894	122	1490	136
% Heavy veh	2	2	2	2	2	2	2	2	2	2	2	2
PHF	0.95	0.95	0.95	0.95	0.95	0.95	0.95	0.95	0.95	0.95	0.95	0.95
Actuated (P/A)	A	A	A	A	A	A	A	A	A	A	A	A
Startup lost time	2.0	2.0	2.0	2.0	2.0		2.0	2.0	2.0	2.0	2.0	
Ext. eff. green	2.0	2.0	2.0	2.0	2.0		2.0	2.0	2.0	2.0	2.0	
Arrival type	5	5	5	5	5		5	5	5	5	5	
Unit Extension	3.0	3.0	3.0	3.0	3.0		3.0	3.0	3.0	3.0	3.0	
Ped/Bike/RTOR Volume	0	0	0	0	0	0	0		325	0		0
Lane Width	12.0	12.0	12.0	12.0	12.0		12.0	12.0	12.0	12.0	12.0	
Parking/Grade/Parking	N	0	N	N	0	N	N	0	N	N	0	N
Parking/hr												
Bus stops/hr	0	0	0	0	0		0	0	0	0	0	
Unit Extension	3.0	3.0	3.0	3.0	3.0		3.0	3.0	3.0	3.0	3.0	

Phasing	Excl. Left	WB Only	Thru & RT	04	Excl. Left	Thru & RT	07	08
Timing	G = 7.0	G = 28.0	G = 20.0	G = 0.0	G = 6.0	G = 34.0	G = 0.0	G = 0.0
	Y = 5	Y = 5	Y = 5	Y =	Y = 5	Y = 5	Y = 0	Y =

Duration of Analysis (hrs) = 0.25 | Cycle Length C = 120.0

Lane Group Capacity, Control Delay, and LOS Determination

	EB			WB			NB			SB		
Adj. flow rate	133	606	214	1154	1228		99	433	599	128	1711	
Lane group cap.	190	890	387	1085	2334		163	1513	575	163	1992	
v/c ratio	0.70	0.68	0.55	1.06	0.53		0.61	0.29	1.04	0.79	0.86	
Green ratio	0.06	0.17	0.26	0.33	0.44		0.05	0.28	0.38	0.05	0.28	
Unif. delay d1	55.5	47.0	38.5	40.0	24.4		55.8	33.5	37.0	56.4	40.7	
Delay factor k	0.27	0.25	0.15	0.50	0.13		0.19	0.11	0.50	0.33	0.39	
Increm. delay d2	10.9	2.1	1.7	45.9	0.2		6.4	0.1	48.8	21.9	4.0	
PF factor	0.959	0.867	0.768	0.667	0.473		0.965	0.736	0.586	0.965	0.736	
Control delay	64.1	42.9	31.3	72.6	11.7		60.3	24.8	70.5	76.3	34.0	
Lane group LOS	E	D	C	E	B		E	C	E	E	C	
Apprch. delay	43.2			41.2			52.1			37.0		
Approach LOS	D			D			D			D		
Intersec. delay	42.2			Intersection LOS						D		

Copyright © 2000 University of Florida, All Rights Reserved

HCS2000: Signalized Intersections Release 4.1f

36-A
EXTP

Urban Systems Inc.
4540 Kearny Villa Rd.
San Diego Ca 92123

Phone: 858-560-4911 Fax:
E-Mail:

OPERATIONAL ANALYSIS

Analyst: USAI
Agency/Co.: USAI
Date Performed: 09/08/08
Analysis Time Period: AM PEAK HOUR
Intersection: ECR/LEUCADIA BLVD.
Area Type: All other areas
Jurisdiction: CARLSBAD
Analysis Year: EXISTING PLUS PROJECT
Project ID: LA COSTA TOWN SQUARE
E/W St: LEUCADIA BLVD. N/S St: ECR

VOLUME DATA

	Eastbound			Westbound			Northbound			Southbound		
	L	T	R	L	T	R	L	T	R	L	T	R
Volume	126	576	203	1096	1084	83	94	411	894	122	1490	136
% Heavy Veh	2	2	2	2	2	2	2	2	2	2	2	2
PHF	0.95	0.95	0.95	0.95	0.95	0.95	0.95	0.95	0.95	0.95	0.95	0.95
PK 15 Vol	33	152	53	288	285	22	25	108	235	32	392	36
Hi Ln Vol												
% Grade		0			0			0			0	
Ideal Sat	1800	2000	1800	1800	2000		1800	2000	1800	1800	2000	
ParkExist												
NumPark												
No. Lanes	2	3	1	2	3	0	2	3	1	2	4	0
LGConfig	L	T	R	L	TR		L	T	R	L	TR	
Lane Width	12.0	12.0	12.0	12.0	12.0		12.0	12.0	12.0	12.0	12.0	
RTOR Vol			0			0			325			0
Adj Flow	133	606	214	1154	1228		99	433	599	128	1711	
%InSharedLn												
Prop LTs		0.000			0.000			0.000			0.000	
Prop RTs		0.000	1.000		0.071			0.000	1.000		0.084	
Peds Bikes	0		0	0		0	0			0		
Buses	0	0	0	0	0		0	0	0	0	0	
%InProtPhase			0.0			0.0						

Duration 0.25 Area Type: All other areas

OPERATING PARAMETERS

	Eastbound			Westbound			Northbound			Southbound		
	L	T	R	L	T	R	L	T	R	L	T	R
Init Unmet	0.0	0.0	0.0	0.0	0.0		0.0	0.0	0.0	0.0	0.0	
Arriv. Type	5	5	5	5	5		5	5	5	5	5	
Unit Ext.	3.0	3.0	3.0	3.0	3.0		3.0	3.0	3.0	3.0	3.0	
I Factor		1.000			1.000			1.000			1.000	
Lost Time	2.0	2.0	2.0	2.0	2.0		2.0	2.0	2.0	2.0	2.0	
Ext of g	2.0	2.0	2.0	2.0	2.0		2.0	2.0	2.0	2.0	2.0	
Ped Min g		38.2			38.2			33.2			33.2	

36-P Ext P

SHORT REPORT

General Information		Site Information	
Analyst	USAI	Intersection	ECR/LEUCADIA BLVD.
Agency or Co.	USAI	Area Type	All other areas
Date Performed	09/08/08	Jurisdiction	ENCINITAS
Time Period	PM PEAK HOUR	Analysis Year	EXISTING PLUS PROJECT

Volume and Timing Input

	EB			WB			NB			SB		
	LT	TH	RT	LT	TH	RT	LT	TH	RT	LT	TH	RT
Num. of Lanes	2	3	1	2	3	0	2	3	1	2	4	0
Lane group	L	T	R	L	TR		L	T	R	L	TR	
Volume (vph)	243	866	266	725	698	124	296	1452	1312	140	980	55
% Heavy veh	2	2	2	2	2	2	2	2	2	2	2	2
PHF	0.95	0.95	0.95	0.95	0.95	0.95	0.95	0.95	0.95	0.95	0.95	0.95
Actuated (P/A)	A	A	A	A	A	A	A	A	A	A	A	A
Startup lost time	2.0	2.0	2.0	2.0	2.0		2.0	2.0	2.0	2.0	2.0	
Ext. eff. green	2.0	2.0	2.0	2.0	2.0		2.0	2.0	2.0	2.0	2.0	
Arrival type	5	5	5	5	5		5	5	5	5	5	
Unit Extension	3.0	3.0	3.0	3.0	3.0		3.0	3.0	3.0	3.0	3.0	
Ped/Bike/RTOR Volume	0	0	0	0	0	0	0	0	355	0	0	0
Lane Width	12.0	12.0	12.0	12.0	12.0		12.0	12.0	12.0	12.0	12.0	
Parking/Grade/Parking	N	0	N	N	0	N	N	0	N	N	0	N
Parking/hr												
Bus stops/hr	0	0	0	0	0		0	0	0	0	0	
Unit Extension	3.0	3.0	3.0	3.0	3.0		3.0	3.0	3.0	3.0	3.0	

Phasing	Excl. Left	Thru & RT	03	04	Excl. Left	Thru & RT	07	08
Timing	G = 30.5	G = 23.5	G = 0.0	G =	G = 15.0	G = 44.0	G = 0.0	G = 0.0
	Y = 5	Y = 5	Y =	Y =	Y = 5	Y = 5	Y = 0	Y =

Duration of Analysis (hrs) = 0.25 | Cycle Length C = 133.0

Lane Group Capacity, Control Delay, and LOS Determination

	EB			WB			NB			SB		
Adj. flow rate	256	912	280	763	866		312	1528	1007	147	1090	
Lane group cap.	747	944	491	747	922		367	1767	897	367	2337	
v/c ratio	0.34	0.97	0.57	1.02	0.94		0.85	0.86	1.12	0.40	0.47	
Green ratio	0.23	0.18	0.33	0.23	0.18		0.11	0.33	0.60	0.11	0.33	
Unif. delay d1	42.9	54.4	37.0	51.3	54.0		57.9	41.7	26.8	54.8	35.2	
Delay factor k	0.11	0.47	0.16	0.50	0.45		0.38	0.39	0.50	0.11	0.11	
Increm. delay d2	0.3	21.4	1.6	38.4	16.9		17.0	4.8	69.7	0.7	0.1	
PF factor	0.802	0.857	0.676	0.802	0.857		0.915	0.670	0.383	0.915	0.670	
Control delay	34.6	68.0	26.6	79.5	63.2		70.0	32.7	80.0	50.9	23.8	
Lane group LOS	C	E	C	E	E		E	C	E	D	C	
Apprch. delay	54.1			70.9			53.5			27.0		
Approach LOS	D			E			D			C		
Intersec. delay	53.0			Intersection LOS						D		

Copyright © 2000 University of Florida, All Rights Reserved

HCS2000: Signalized Intersections Release 4.1f

36-P
EX+P

Urban Systems Inc.
4540 Kearny Villa Rd.
San Diego Ca 92123

Phone: 858-560-4911 Fax:
E-Mail:

OPERATIONAL ANALYSIS

Analyst: USAI
Agency/Co.: USAI
Date Performed: 09/08/08
Analysis Time Period: PM PEAK HOUR
Intersection: ECR/LEUCADIA BLVD.
Area Type: All other areas
Jurisdiction: ENCINITAS
Analysis Year: EXISTING PLUS PROJECT
Project ID: LA COSTA TOWN SQUARE
E/W St: LEUCADIA BLVD. N/S St: ECR

VOLUME DATA

	Eastbound			Westbound			Northbound			Southbound		
	L	T	R	L	T	R	L	T	R	L	T	R
Volume	243	866	266	725	698	124	296	1452	1312	140	980	55
% Heavy Veh	2	2	2	2	2	2	2	2	2	2	2	2
PHF	0.95	0.95	0.95	0.95	0.95	0.95	0.95	0.95	0.95	0.95	0.95	0.95
PK 15 Vol	64	228	70	191	184	33	78	382	345	37	258	14
Hi Ln Vol												
% Grade		0			0			0			0	
Ideal Sat	1800	2000	1800	1800	2000		1800	2000	1800	1800	2000	
ParkExist												
NumPark												
No. Lanes	2	3	1	2	3	0	2	3	1	2	4	0
LGConfig	L	T	R	L	TR		L	T	R	L	TR	
Lane Width	12.0	12.0	12.0	12.0	12.0		12.0	12.0	12.0	12.0	12.0	
RTOR Vol			0			0			355			0
Adj Flow	256	912	280	763	866		312	1528	1007	147	1090	
%InSharedLn												
Prop LTs		0.000			0.000			0.000			0.000	
Prop RTs		0.000	1.000		0.151			0.000	1.000		0.053	
Peds Bikes	0		0	0		0	0		0	0		0
Buses	0	0	0	0	0		0	0	0	0	0	
%InProtPhase			0.0						0.0			

Duration 0.25 Area Type: All other areas

OPERATING PARAMETERS

	Eastbound			Westbound			Northbound			Southbound		
	L	T	R	L	T	R	L	T	R	L	T	R
Init Unmet	0.0	0.0	0.0	0.0	0.0		0.0	0.0	0.0	0.0	0.0	
Arriv. Type	5	5	5	5	5		5	5	5	5	5	
Unit Ext.	3.0	3.0	3.0	3.0	3.0		3.0	3.0	3.0	3.0	3.0	
I Factor		1.000			1.000			1.000			1.000	
Lost Time	2.0	2.0	2.0	2.0	2.0		2.0	2.0	2.0	2.0	2.0	
Ext of g	2.0	2.0	2.0	2.0	2.0		2.0	2.0	2.0	2.0	2.0	
Ped Min g		3.2			3.2			3.2			3.2	

37-A EXTP

SHORT REPORT

General Information		Site Information	
Analyst	USAI	Intersection	OLIVENHAIN RD./AMARGOSA DR.
Agency or Co.	USAI	Area Type	All other areas
Date Performed	09/08/08	Jurisdiction	ENCINITAS
Time Period	AM PEAK HOUR	Analysis Year	EXISTING PLUS PROJECT

Volume and Timing Input

	EB			WB			NB			SB		
	LT	TH	RT	LT	TH	RT	LT	TH	RT	LT	TH	RT
Num. of Lanes	1	2	0	1	2	0	0	1	0	0	1	0
Lane group	L	TR		L	TR			LTR			LTR	
Volume (vph)	53	1118	31	68	2043	12	132	1	41	11	9	184
% Heavy veh	0	2	0	0	2	2	2	2	2	0	0	0
PHF	0.95	0.95	0.95	0.95	0.95	0.95	0.95	0.95	0.95	0.95	0.95	0.95
Actuated (P/A)	A	A	A	A	A	A	A	A	A	A	A	A
Startup lost time	2.0	2.0		2.0	2.0			2.0			2.0	
Ext. eff. green	2.0	2.0		2.0	2.0			2.0			2.0	
Arrival type	5	5		5	5			5			5	
Unit Extension	3.0	3.0		3.0	3.0			3.0			3.0	
Ped/Bike/RTOR Volume	0	0	0	0	0	0	0	0	25	0	0	50
Lane Width	12.0	12.0		12.0	12.0			12.0			12.0	
Parking/Grade/Parking	N	0	N	N	0	N	N	0	N	N	0	N
Parking/hr												
Bus stops/hr	0	0		0	0			0			0	
Unit Extension	3.0	3.0		3.0	3.0			3.0			3.0	

Phasing	Excl. Left	Thru & RT	03	04	NS Perm	06	07	08
Timing	G = 10.0	G = 60.0	G =	G =	G = 25.0	G =	G =	G =
	Y = 5	Y = 5	Y =	Y =	Y = 5	Y =	Y =	Y =

Duration of Analysis (hrs) = 0.25 | Cycle Length C = 110.0

Lane Group Capacity, Control Delay, and LOS Determination

	EB			WB			NB			SB		
Adj. flow rate	56	1210		72	2164			157			162	
Lane group cap.	155	2029		155	2035			238			352	
v/c ratio	0.36	0.60		0.46	1.06			0.66			0.46	
Green ratio	0.09	0.55		0.09	0.55			0.23			0.23	
Unif. delay d1	47.0	16.8		47.5	25.0			38.6			36.7	
Delay factor k	0.11	0.19		0.11	0.50			0.23			0.11	
Increm. delay d2	1.4	0.5		2.2	39.3			6.6			1.0	
PF factor	0.933	0.200		0.933	0.234			0.804			0.804	
Control delay	45.3	3.9		46.5	45.1			37.7			30.4	
Lane group LOS	D	A		D	D			D			C	
Apprch. delay	5.7			45.2			37.7			30.4		
Approach LOS	A			D			D			C		
Intersec. delay	31.2			Intersection LOS						C		

Copyright © 2000 University of Florida, All Rights Reserved

37-P
EXTP

SHORT REPORT

General Information		Site Information	
Analyst	USAI	Intersection	OLIVENHAIN RD./AMARGOSA DR.
Agency or Co.	USAI	Area Type	All other areas
Date Performed	09/09/08	Jurisdiction	CARLSBAD
Time Period	PM PEAK HOUR	Analysis Year	EXISTING PLUS PROJECT

Volume and Timing Input

	EB			WB			NB			SB		
	LT	TH	RT	LT	TH	RT	LT	TH	RT	LT	TH	RT
Num. of Lanes	1	2	0	1	2	0	0	1	0	0	1	0
Lane group	L	TR		L	TR			LTR			LTR	
Volume (vph)	126	1896	108	65	1325	17	61	5	36	10	6	59
% Heavy veh	0	2	0	0	2	2	2	2	2	0	0	0
PHF	0.95	0.95	0.95	0.95	0.95	0.95	0.95	0.95	0.95	0.95	0.95	0.95
Actuated (P/A)	A	A	A	A	A	A	A	A	A	A	A	A
Startup lost time	2.0	2.0		2.0	2.0			2.0			2.0	
Ext. eff. green	2.0	2.0		2.0	2.0			2.0			2.0	
Arrival type	5	5		5	5			5			5	
Unit Extension	3.0	3.0		3.0	3.0			3.0			3.0	
Ped/Bike/RTOR Volume	0	0	50	0	0	0	0	0	20	0	0	50
Lane Width	12.0	12.0		12.0	12.0			12.0			12.0	
Parking/Grade/Parking	N	0	N	N	0	N	N	0	N	N	0	N
Parking/hr												
Bus stops/hr	0	0		0	0			0			0	
Unit Extension	3.0	3.0		3.0	3.0			3.0			3.0	

Phasing	Excl. Left	Thru & RT	03	04	NS Perm	06	07	08
Timing	G = 13.0	G = 52.0	G =	G =	G = 20.0	G =	G =	G =
	Y = 5	Y = 5	Y =	Y =	Y = 5	Y =	Y =	Y =

Duration of Analysis (hrs) = 0.25 | Cycle Length C = 100.0

Lane Group Capacity, Control Delay, and LOS Determination

	EB			WB			NB			SB		
Adj. flow rate	133	2057		68	1413			86			26	
Lane group cap.	222	1934		222	1938			266			308	
v/c ratio	0.60	1.06		0.31	0.73			0.32			0.08	
Green ratio	0.13	0.52		0.13	0.52			0.20			0.20	
Unif. delay d1	41.0	24.0		39.4	18.6			34.2			32.5	
Delay factor k	0.19	0.50		0.11	0.29			0.11			0.11	
Increm. delay d2	4.4	39.8		0.8	1.4			0.7			0.1	
PF factor	0.900	0.278		0.900	0.278			0.833			0.833	
Control delay	41.4	46.5		36.3	6.6			29.2			27.2	
Lane group LOS	D	D		D	A			C			C	
Apprch. delay	46.2			7.9			29.2			27.2		
Approach LOS	D			A			C			C		
Intersec. delay	30.7			Intersection LOS						C		

Copyright © 2000 University of Florida, All Rights Reserved

40-A
EXIT

SHORT REPORT

General Information		Site Information	
Analyst	USAI	Intersection	MELROSE DR./SAN ELIJO RD.
Agency or Co.	USAI	Area Type	All other areas
Date Performed	09/09/08	Jurisdiction	SAN MARCOS
Time Period	AM PEAK HOUR	Analysis Year	EXISTING PLUS PROJECT

Volume and Timing Input

	EB			WB			NB			SB		
	LT	TH	RT	LT	TH	RT	LT	TH	RT	LT	TH	RT
Num. of Lanes	1	2	1	1	2	1	1	1	0	1	1	1
Lane group	L	T	R	L	T	R	L	TR		L	LT	R
Volume (vph)	81	250	84	57	760	681	97	44	23	301	35	30
% Heavy veh	0	2	0	0	2	2	2	2	2	0	0	0
PHF	0.95	0.95	0.95	0.95	0.95	0.95	0.95	0.95	0.95	0.95	0.95	0.95
Actuated (P/A)	A	A	A	A	A	A	A	A	A	A	A	A
Startup lost time	2.0	2.0	2.0	2.0	2.0	2.0	2.0	2.0		2.0	2.0	2.0
Ext. eff. green	2.0	2.0	2.0	2.0	2.0	2.0	2.0	2.0		2.0	2.0	2.0
Arrival type	5	5	5	5	5	5	5	5		5	5	5
Unit Extension	3.0	3.0	3.0	3.0	3.0	3.0	3.0	3.0		3.0	3.0	3.0
Ped/Bike/RTOR Volume	0	0	0	0	0	0	0	0	0	0	0	0
Lane Width	12.0	12.0	12.0	12.0	12.0	12.0	12.0	12.0		12.0	12.0	12.0
Parking/Grade/Parking	N	0	N	N	0	N	N	0	N	N	0	N
Parking/hr												
Bus stops/hr	0	0	0	0	0	0	0	0		0	0	0
Unit Extension	3.0	3.0	3.0	3.0	3.0	3.0	3.0	3.0		3.0	3.0	3.0

Phasing	Excl. Left	Thru & RT	03	04	SB Only	NB Only	07	08
Timing	G = 11.0	G = 53.0	G =	G =	G = 18.0	G = 10.0	G =	G =
	Y = 5	Y = 5	Y =	Y =	Y = 4	Y = 4	Y =	Y =

Duration of Analysis (hrs) = 0.25 | Cycle Length C = 110.0

Lane Group Capacity, Control Delay, and LOS Determination

	EB			WB			NB			SB		
Adj. flow rate	85	263	88	60	800	717	102	70		190	164	32
Lane group cap.	171	1799	737	171	1799	723	152	169		280	315	250
v/c ratio	0.50	0.15	0.12	0.35	0.44	0.99	0.67	0.41		0.68	0.52	0.13
Green ratio	0.10	0.48	0.48	0.10	0.48	0.48	0.09	0.09		0.16	0.16	0.16
Unif. delay d1	46.9	15.9	15.7	46.2	18.8	28.3	48.4	47.2		43.3	42.1	39.3
Delay factor k	0.11	0.11	0.11	0.11	0.11	0.49	0.24	0.11		0.25	0.13	0.11
Increm. delay d2	2.3	0.0	0.1	1.2	0.2	31.3	11.0	1.6		6.5	1.6	0.2
PF factor	0.926	0.380	0.380	0.926	0.380	0.380	0.933	0.933		0.870	0.870	0.870
Control delay	45.7	6.1	6.0	44.0	7.3	42.1	56.1	45.7		44.1	38.1	34.4
Lane group LOS	D	A	A	D	A	D	E	D		D	D	C
Apprch. delay	13.8			24.5			51.9			40.8		
Approach LOS	B			C			D			D		
Intersec. delay	27.0			Intersection LOS						C		

HCS2000™ Copyright © 2000 University of Florida, All Rights Reserved Version 4.1f

40-P
Ex+P

SHORT REPORT

General Information		Site Information	
Analyst	USAI	Intersection	MELROSE DR./SAN ELIJO RD.
Agency or Co.	USAI	Area Type	All other areas
Date Performed	09/09/08	Jurisdiction	SAN MARCOS
Time Period	PM PEAK HOUR	Analysis Year	EXISTING PM WITH PROJECT

Volume and Timing Input

	EB			WB			NB			SB		
	LT	TH	RT	LT	TH	RT	LT	TH	RT	LT	TH	RT
Num. of Lanes	1	2	1	1	2	1	1	1	0	1	1	1
Lane group	L	T	R	L	T	R	L	TR		L	LT	R
Volume (vph)	100	698	94	211	319	211	83	45	36	461	54	94
% Heavy veh	0	2	0	0	2	2	2	2	2	0	0	0
PHF	0.95	0.95	0.95	0.95	0.95	0.95	0.95	0.95	0.95	0.95	0.95	0.95
Actuated (P/A)	A	A	A	A	A	A	A	A	A	A	A	A
Startup lost time	2.0	2.0	2.0	2.0	2.0	2.0	2.0	2.0		2.0	2.0	2.0
Ext. eff. green	2.0	2.0	2.0	2.0	2.0	2.0	2.0	2.0		2.0	2.0	2.0
Arrival type	5	5	5	5	5	5	4	4		4	4	4
Unit Extension	3.0	3.0	3.0	3.0	3.0	3.0	3.0	3.0		3.0	3.0	3.0
Ped/Bike/RTOR Volume	0	0	0	0	0	0	0	0	0	0	0	10
Lane Width	12.0	12.0	12.0	12.0	12.0	12.0	12.0	12.0		12.0	12.0	12.0
Parking/Grade/Parking	N	0	N	N	0	N	N	0	N	N	0	N
Parking/hr												
Bus stops/hr	0	0	0	0	0	0	0	0		0	0	0
Unit Extension	3.0	3.0	3.0	3.0	3.0	3.0	3.0	3.0		3.0	3.0	3.0

Phasing	Excl. Left	Thru & RT	03	04	SB Only	NB Only	07	08
Timing	G = 15.0	G = 32.0	G =	G =	G = 20.0	G = 10.0	G =	G =
	Y = 5	Y = 5	Y =	Y =	Y = 4	Y = 4	Y =	Y =
Duration of Analysis (hrs) = 0.25					Cycle Length C = 95.0			

Lane Group Capacity, Control Delay, and LOS Determination

	EB			WB			NB			SB		
Adj. flow rate	105	735	99	222	336	222	87	85		267	275	88
Lane group cap.	270	1257	515	270	1257	505	176	193		360	405	322
v/c ratio	0.39	0.58	0.19	0.82	0.27	0.44	0.49	0.44		0.74	0.68	0.27
Green ratio	0.16	0.34	0.34	0.16	0.34	0.34	0.11	0.11		0.21	0.21	0.21
Unif. delay d1	35.9	26.0	22.3	38.7	23.0	24.5	40.1	39.9		35.1	34.5	31.4
Delay factor k	0.11	0.18	0.11	0.36	0.11	0.11	0.11	0.11		0.30	0.25	0.11
Increm. delay d2	0.9	0.7	0.2	18.2	0.1	0.6	2.2	1.6		8.0	4.6	0.5
PF factor	0.875	0.661	0.661	0.875	0.661	0.661	1.000	1.000		1.000	1.000	1.000
Control delay	32.3	17.9	15.0	52.0	15.3	16.8	42.3	41.5		43.1	39.1	31.9
Lane group LOS	C	B	B	D	B	B	D	D		D	D	C
Apprch. delay	19.2			26.2			41.9			39.8		
Approach LOS	B			C			D			D		
Intersec. delay	28.1			Intersection LOS						C		

HCS2000™ Copyright © 2000 University of Florida, All Rights Reserved Version 4.1f