QUARRY CREEK
MASTER VESTING TENTATIVE MAP
CT 11-04

LEGAL DESCRIPTIONS:

A. APN: 167-040-21 (PARCEL A)

REAL PROPERTY IN THE CITY OF CARLSBAD, COUNTY OF SAN DIEGO, STATE OF CALIFORNIA, DESCRIBED AS FOLLOWS:

PARCEL A:

THAT PORTION OF RANCHO AGUA HEDIONDA, IN THE CITY OF CARLS BAD, COUNTY OF SAN DIEGO, STATE OF CALIFORNIA, ACCORDING TO PARTITION MAP NO. 823, FILED IN THE OFFICE OF THE COUNTY RECORDER OF SAN DIEGO COUNTY, NOVEMBER 16, 1896, DESCRIBED AS FOLLOWS:

BEGINNING AT THE NORTHEASTERLY CORNER OF LOT "J" OF SAID RANCHO; THENCE SOUTHWESTERLY ALONG THE NORTHWESTERLY LINE OF SAID LOT "J" SOUTH 69° 36' 25" WEST 2,149.10 FEET RECORD SOUTH 69° 36' 00" WEST 2,152.00 FEET, MORE OR LESS TO THE SOUTHERLY PROLONGATION OF THE WESTERLY LINE OF THE LAND DESCRIBED IN DEED TO ROSA MARRON, RECORDED MAY 1, 1903 IN BOOK 324, PAGE 114 OF DEEDS, RECORDS OF SAN DIEGO COUNTY; THENCE NORTHERLY ALONG SAID PROLONGATION AND SAID WESTERLY LINE NORTH 05° 23' 20" WEST, RECORD NORTH 07° 35' 00" WEST, 1,906.40 FEET, TO AN INTERSECTION WITH THE SOUTHERLY LINE OF LAND DESCRIBED IN A DEED TO THE STATE OF CALIFORNIA FOR FREEWAY PURPOSES, RECORDED NOVEMBER 13, 1964 AS FILE NO. 206558 OF OFFICIAL RECORDS; THENCE ALONG SAID SOUTHERLY BOUNDARY, NORTH 54° 35' 03" EAST 61.20 FEET, RECORD NORTH 54° 12' 28" EAST 66.68 FEET; NORTH 62° 19' 49" EAST, RECORD NORTH 61° 50' 14", EAST 781.78 FEET; NORTH 70° 22' 43" EAST, RECORD NORTH 70° 00' 08" EAST, 160.25 FEET; NORTH 53° 37' 35" EAST, RECORD NORTH 53° 15' 00" EAST, 60.91 FEET; NORTH 11° 22' 59" EAST, RECORD NORTH 11° 00' 24" EAST, 91.21 FEET; NORTH 69° 05' 01" EAST, RECORD NORTH 68° 42' 26" EAST, 625.00 FEET; SOUTH 71° 01' 22" EAST, RECORD SOUTH 71° 23' 57" EAST, 97.79 FEET; SOUTH 29° 15' 52" EAST, RECORD SOUTH 29° 38' 27" EAST, 45.80 FEET; NORTH 89° 44' 27" EAST, RECORD NORTH 89° 21' 52" EAST, 97.35 FEET; NORTH 51° 23' 56" EAST, RECORD NORTH 51° 01' 21" EAST, 180.95 FEET; NORTH 79° 55' 20" EAST 17.18 FEET, RECORD NORTH 79° 32' 45" EAST, 17.12 FEET; NORTH 82° 05' 47" EAST, RECORD NORTH 81° 43' 12" EAST 32.23 FEET; NORTH 20° 31' 54" EAST, RECORD NORTH 28° 09' 19 EAST, 25.12 FEET; NORTH 63° 40' 35" EAST, RECORD NORTH 63° 18' 00" EAST, 67.81 FEET; AND NORTH 84° 42' 03" EAST 126.8 FEET, RECORD NORTH 84° 19' 28" EAST 135.48 FEET, TO THE INTERSECTION WITH THE HEREINBEFORE SAID EASTERLY LINE OF LAND CONVEYED TO SILVESTRE MARRON, SAID POINT OF INTERSECTION BEING ALSO FOR REFERENCE ALONG A RADIAL LINE SOUTH 18° 13' 52" EAST 202.64 FEET FROM THE ENGINEER'S STATION 196 PLUS 96.37 P.O.C. CENTER LINE OF THE DEPARTMENT OF PUBLIC WORKS 1951 SURVEY FOR ROAD XI-SD-196-OCN-A; THENCE SOUTH 01° 19' 47" EAST, 2,063.50 FEET TO THE POINT OF BEGINNING.

EXCEPTING THEREFROM THAT PORTION, IF ANY, LYING NORTHERLY OF THE SOUTHERLY LINE OF LAND DESCRIBED IN A FINAL ORDER OF CONDEMNATION, RECORDED APRIL 29, 1954 IN BOOK 5223, PAGE 37 OF OFFICIAL RECORDS.

ALSO EXCEPTING THAT PORTION OF LYING WITHIN THE FOLLOWING DESCRIBED LAND:

COMMENCING AT THE NORTHWEST CORNER OF RECORD OF SURVEY NO. 9336, FILED IN THE OFFICE OF THE COUNTY RECORDER OF SAN DIEGO COUNTY, MAY 12, 1983 AS FILE NO. 830F OFFICIAL RECORDS; THENCE NORTH 70° 04' 42" EAST 1,005.63 FEET TO THE TRUE POINT OF BEGINNING, SAID TRUE POINT OF BEGINNING BEING A POINT ON THE ARC OF A NON-TANGENT 178.00 FOOT RADIUS CURVE, CONCAVE SOUTHEASTERLY A RADIAL LINE TO SAID CURVE BEARS NORTH 52° 29' 44" WEST; THENCE ALONG THE ARC OF SAID CURVE 101.20 FEET THROUGH A CENTRAL ANGLE OF 32° 34' 26"; THENCE NORTH 70° 04' 42" EAST 170.00 FEET TO A 228.00 FOOT RADIUS CURVE, CONCAVE SOUTHERLY; THENCE ALONG THE ARC OF SAID CURVE 87.61 FEET THROUGH A CENTRAL ANGLE OF 22° 00' 59"; THENCE SOUTH 87° 54' 19" EAST 30.34; THENCE SOUTH 70° 04' 42" WEST 379.43 FEET TO THE TRUE POINT OF BEGINNING.

B. APN: 167-040-11 (PARCEL B)

PARCEL B:

ALL THAT PORTION OF RANCHO AGUA HEDIONDA, IN THE COUNTY OF SAN DIEGO, STATE OF CAUFORNIA, ACCORDING TO PATENT MAP THEREOF, RECORDED IN BOOK 1, PAGE 150 OF PATENTS, FILED IN THE OFFICE OF THE COUNTY RECORDER OF SAN DIEGO COUNTY, DESCRIBED AS FOLLOWS:

COMMENCING AT CORNER NO.2 OF SAID RANCHO HEDIONDA; THENCE SOUTH 30° 03' WEST ALONG THE WESTERLY LINE THEREOF, 274.80 FEET, MORE OR LESS, TO THE CENTER LINE OF THE RELOCATION OF COUNTY HIGHWAY COMMISSION ROUTE 14, FROM OCEANSIDE TO VISTA, ACCORDING TO MAP THEREOF, FILED IN THE OFFICE OF COUNTY SURVEYOR OF SAN DIEGO COUNTY; THENCE ALONG SAID CENTER LINE, AS FOLLOWS:

SOUTH 74° 48' EAST, 531.12 FEET TO THE BEGINNING OF A CURVE TO THE LEFT, HAVING A RADIUS OF 2,000.00 FEET; LONG SAID CURVE, THROUGH A CENTRAL ANGLE OF 6° 38', A DISTANCE OF 231.55 FEET; NON-TANGENT SOUTH 83° 31' EAST (DEED SOUTH 81° 26' EAST), 2,345.90 FEET TO THE BEGINNING OF A CURVE TO THE LEFT, HAVING A RADIUS OF 2,000.00 FEET; ALONG SAID CURVE, THROUGH A CENTRAL ANGLE OF 12° 19' A DISTANCE OF 429.93 FEET; NORTH 84° 10' EAST (DEED NORTH 86° 15' EAST) 145.34 FEET TO THE BEGINNING OF A CURVE TO THE LEFT HAVING A RADIUS OF 400.00 FEET; ALONG SAID CURVE, THROUGH A CENTRAL ANGLE OF 6° 38', A DISTANCE OF 258.19 FEET; NORTH 47° 11' EAST (DEED NORTH 49° 16' EAST) 100.27 FEET, MORE OR LESS TO THE INTERSECTION WITH THE WESTERLY LINE OF LAND DESCRIBED IN DEED TO ROSA MARRON, DATED DECEMBER 10, 1902 AND RECORDED IN BOOK 324, PAGE 114 OF DEEDS; THENCE ALONG SAID WESTERLY LINE, SOUTH 7° 36' 16" EAST (DEED SOUTH 7° 35' WEST) 1,171.22 FEET TO THE TRUE POINT OF BEGINNING; THENCE CONTINUING SOUTH 7° 36' 16" EAST ALONG SAID WESTERLY LINE, 880.00 FEET TO THE SOUTHWESTERLY CORNER THEREOF, BEING ALSO THE SOUTHEASTERLY CORNER OF LAND DESCRIBED IN DEED TO JOE A. MARRON, DATED APRIL 18, 1918 AND RECORDED IN BOOK 754, PAGE 301 OF DEEDS; THENCE SOUTH 67° WEST, ALONG THE SOUTHERLY LINE OF SAID LAND, 1,709.40 FEET TO THE MOST SOUTHERLY CORNER THEREOF; THENCE NORTH 59° WEST ALONG SAID SOUTHERLY LINE, 900.09 FEET TO THE MOST SOUTHERLY CORNER OF LAND DESCRIBED IN DEED TO JUAN M. MARRON DATED AUGUST 11, 1913 AND RECORDED IN BOOK 616, PAGE 414 OF DEEDS; THENCE NORTH 16° 07' 10" EAST 890.00 FEET TO AN INTERSECTION WITH A LINE WHICH BEARS SOUTH 83° 37' 09' WEST FROM THE TRUE POINT OF BEGINNING; THENCE NORTH 83° 37' 09" EAST, 1,993.84 FEET TO THE TRUE POINT OF BEGINNING.

EXCEPTING THEREFROM THAT PORTION LYING WITHIN THE FOLLOWING DESCRIBED LAND:

COMMENCING AT THE NORTHWEST CORNER OF RECORD OF SURVEY NO. 9336, FILED IN THE OFFICE OF THE COUNTY RECORDER OF SAN DIEGO COUNTY, MAY 12, 1983 AS FILE NO. 830F OFFICIAL RECORDS; THENCE NORTH 70° 04' 42" EAST 1,005.63 FEET TO THE TRUE POINT OF BEGINNING, SAID TRUE POINT OF BEGINNING BEING A POINT ON THE ARC OF A NON-TANGENT 178.00 FOOT RADIUS CURVE, CONCAVE SOUTHEASTERLY A RADIAL LINE TO SAID CURVE BEARS NORTH 52° 29' 44" WEST; THENCE ALONG THE ARC OF SAID CURVE 101.20 FEET THROUGH A CENTRAL ANGLE OF 32° 34' 26"; THENCE NORTH 70° 04' 42" EAST 170.00 FEET TO A 228.00 FOOT RADIUS CURVE, CONCAVE SOUTHERLY; THENCE ALONG THE ARC OF SAID CURVE 87.61 FEET, THROUGH A CENTRAL ANGLE OF 22° 00' 59"; THENCE SOUTH 87°54' 19" EAST 30.34 FEET; THENCE SOUTH 70° 04' 42" WEST 379.43 FEET TO THE TRUE POINT OF BEGINNING.

BASIS OF BEARINGS

THE BASIS OF BEARINGS FOR THIS A.L.T.A. IS THE CALIFORNIA COORDINATE SYSTEM OF 1983, ZONE 6, EPOCH 1991.35 GRID BEARING BETWEEN G.P.S. STATION 88 (CLSB-088) AND G.P.S. STATION 87 (CLSB-087) PER ROS 17271.

I.E., NORTH 76°15'00" WEST

DISTANCES SHOWN HEREON ARE GRID DISTANCES. TO OBTAIN GROUND LEVEL DISTANCES, MULTIPLY DISTANCES BY 1/0.999948180.

BENCHMARK

CITY OF CARLSBAD G.P.S STATION NO. 88 (CLSB-088) PER RECORD OF SURVEY NO. 17271.

ELEVATION : 317.176 M.S.L. DATUM (NG.V.D. 29)

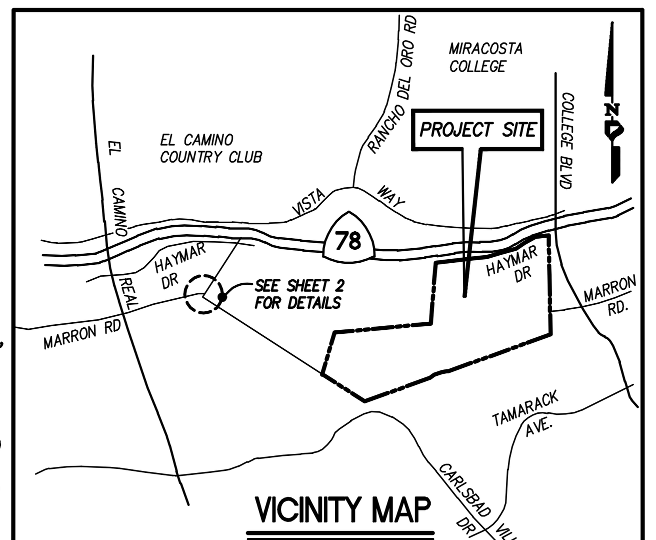

VICINITY MAP
NO SCALE

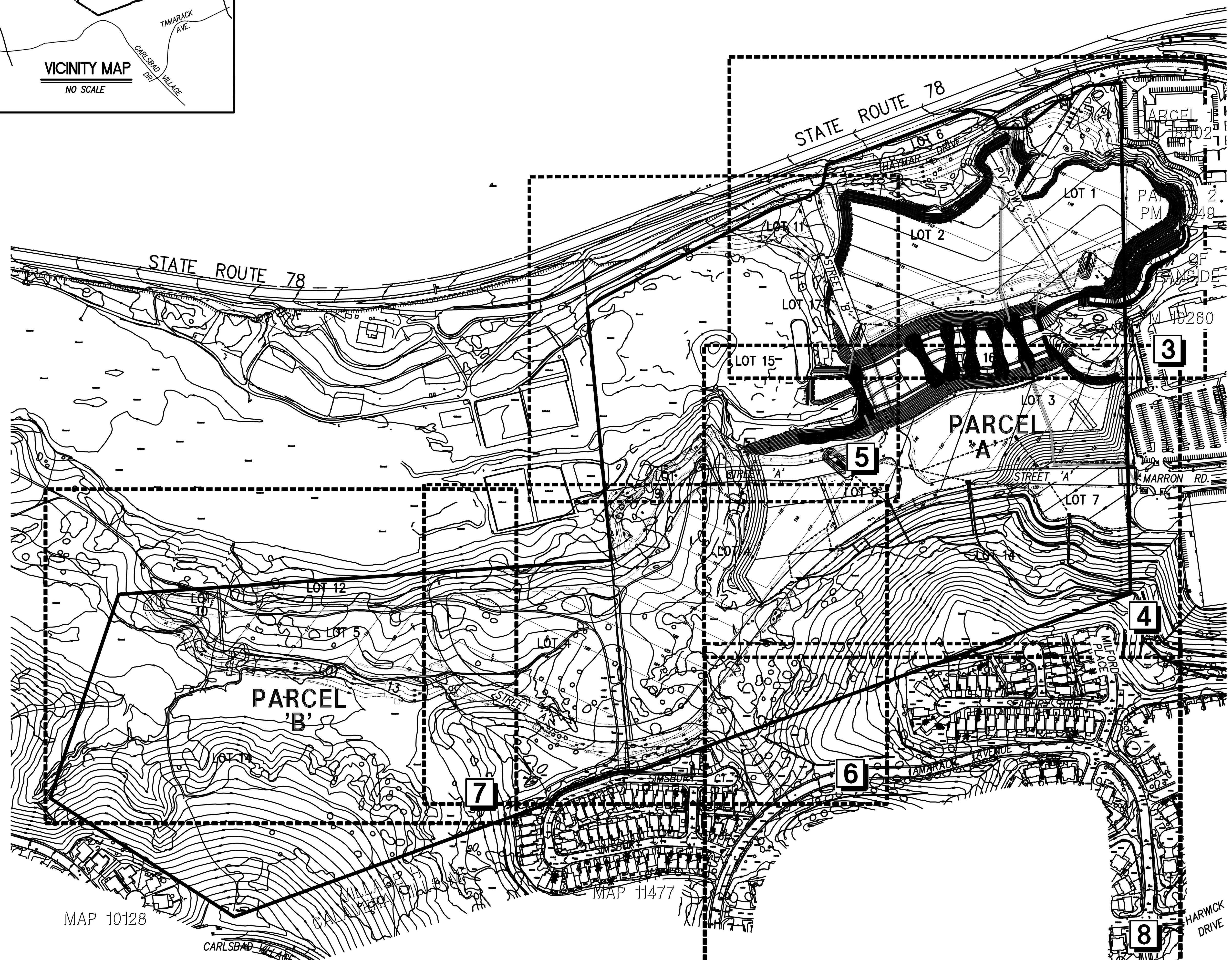

KEY MAP
SCALE: 1"=300'

UTILITIES

WATER---------------CARLSBAD MUNICIPAL WATER DISTRICT
SEWER---------------CITY OF CARLSBAD
STORM DRAIN---------- CITY OF CARLSBAD
GAS AND ELECTRIC------SAN DIEGO GAS & ELECTRIC
TELEPHONE-----------SBC TELEPHONE
CABLE T.V.-----------TIME WARNER CABLE
SCHOOL-------------CARLSBAD UNIFIED SCHOOL DISTRICT

OTHER APPLICATIONS

GPA 11-09
MP 10-01
HMP 11-07
HDP 11-04
SUP 11-04
ZC 11-04

SHEET INDEX

SHEET 1........................TITLE SHEET
SHEET 2........................STREET SECTIONS AND DETAIL SHEET
SHEETS 3–8....................VTM PLAN SHEETS
SHEET 9........................STREET 'B' PROFILE
SHEET 10......................TOPOGRAPHIC AND ENCUMBRANCE MAP
SHEET 11......................CROSS SECTIONS
SHEET 12......................PRELIMINARY VEHICULAR BRIDGE PLAN
SHEET 13......................CONCEPTUAL SECONDARY ACCESS AND BUS ROUTE EXHIBIT
SHEET 14......................BMP EXHIBIT/MAP

ASSESSOR'S PARCEL NO.

167-040-11 & 21

PRELIMINARY SOILS REPORT

BY: GEOCON INC., DATED MARCH 2012

OWNER

HANSON AGGREGATE PACIFIC SOUTHWEST, INC.
P.O. BOX 639069
SAN DIEGO, CA. 92163-9069
(858) 577-2770 OFFICE
(858) 577-2779 FAX

BY:____________________

DATE:____________________

APPLICANT

QUARRY CREEK INVESTORS, LLC
2750 WOMBLE ROAD
SAN DIEGO, CA. 92106
(619) 794-1252 OFFICE
(619) 336-3010 FAX

BY:____________________
TODD GALARNEAU, SENIOR V.P.

DATE:____________________

BY:____________________
DON MITCHELL, SENIOR V.P.

DATE:____________________

LEGEND

- OWNERSHIP BOUNDARY
- PROPOSED LOT LINE
- PROPOSED BRUSH MANAGEMENT ZONE
- PROPOSED TRAILS
- PROPOSED INTERSECTION SIGHT DISTANCE
- PROPOSED EASEMENT
- PROPOSED HMP LINE — HW —
- PROPOSED 100' WETLAND BUFFER
- EXISTING CALTRANS RIGHT-OF-WAY
- PROP. 100 YR FLOODLINE
- LOT NUMBER — 1
- EXISTING STREET LIGHT
- PROPOSED STREET LIGHT (PUBLIC)
- EXISTING CONTOURS — 310
- PROPOSED CONTOURS — 250
- PROPOSED CUT SLOPE (2:1 MAX.) UNLESS SHOWN OTHERWISE
- PROPOSED FILL SLOPE (2:1 MAX.) UNLESS SHOWN OTHERWISE
- PROPOSED DAYLIGHT LINE
- PROPOSED DISTURBANCE LINE — D
- PROPOSED RETAINING WALL
- SLOPE GRADE — 4%
- TOP OF WALL / FINISH GRADE — TW XXX.X / FG XXX.X
- EXISTING CONC. BROW DITCH
- PROPOSED CONC. BROW DITCH
- PROPOSED SWALE
- EXISTING RIPRAP
- PROPOSED RIPRAP
- PROPOSED PUBLIC HEADWALL
- PROPOSED PUBLIC STORM DRAIN RISER
- EXISTING PUBLIC STORM DRAIN & CLEANOUT OR INLET
- PROPOSED PUBLIC STORM DRAIN & CLEANOUT OR INLET
- EXISTING PRIVATE STORM DRAIN
- PROPOSED PRIVATE STORM DRAIN
- EXISTING SEWER MAIN — S
- PROPOSED SEWER MAIN/ MANHOLE — S —
- PROPOSED RECYCLED WATER MAIN — RW —
- EXISTING WATER MAIN — W
- PROPOSED WATER MAIN — W —
- EXISTING FIRE HYDRANT
- PROPOSED FIRE HYDRANT
- WATER POLISHER
- HAYMAR DRIVE EXISTING PAVEMENT
- POSSIBLE ACCESS POINTS
- BUS ROUTE

GENERAL NOTES

1. EXISTING GENERAL PLAN DESIGNATION — RLM, OS
2. PROPOSED GENERAL PLAN DESIGNATION — RMH, RH, OS, CF
3. EXISTING ZONING — R-1, INDUSTRIAL
4. PROPOSED ZONING — PC
5. PROPOSED PROJECT IS LOCATED IN LOCAL FACILITIES MANAGEMENT PLAN ZONE 25.
6. TOTAL PROJECT BOUNDARY = 155.38 ACRES

LOT 1 = 7.11 AC	LOT 5 = 5.69 AC	LOT 9 = 3.27 AC	LOT 13 = 0.80 AC	LOT 17 = 0.14 AC
LOT 2 = 11.15 AC	LOT 6 = 0.87 AC	LOT 10 = 0.86 AC	LOT 14 = 56.71 AC	PUBLIC ROADS = 10.52 AC
LOT 3 = 6.66 AC	LOT 7 = 2.12 AC	LOT 11 = 0.64 AC	LOT 15 = 19.35 AC	
LOT 4 = 18.39 AC	LOT 8 = 1.27 AC	LOT 12 = 1.44 AC	LOT 16 = 8.39 AC	

7. TOPOGRAPHY SHOWN ON THIS SURVEY IS BASED UPON AN AERIAL SURVEY BY PROJECT DESIGN CONSULTANTS, IN JANUARY, 2006 AND HANSON QUARRY GRADING IN DWG. 470-5A.
8. ALL CUT AND FILL SLOPES ARE TO BE 2:1 MAXIMUM, EXCEPT AS OTHERWISE SHOWN ON PLAN.
9. GRADING SHOWN HEREON IS PRELIMINARY AND IS SUBJECT TO REVISIONS MADE DURING THE FINAL DESIGN PROCESS, IN ACCORDANCE WITH ENGINEERING POLICY NO. 30, AND APPROVAL FROM THE CITY ENGINEER AND CITY PLANNER.
10. ALL LOT DIMENSIONS SHOWN ARE APPROXIMATE. ALL LOTS TO MEET MINIMUM DIMENSIONS OF UNDERLYING ZONING.
11. EARTHWORK QUANTITIES (GEOMETRIC): 582,000 C.Y. CUT, 582,000 C.Y. FILL (DISTURBED ACRES: 73.5 AC., 7,918 C.Y./AC.) REMEDIAL GRADING QUANTITIES: 192,000 C.Y.
12. THE BEARINGS AND DISTANCES SHOWN WERE DETERMINED FROM A FIELD SURVEY DATED JANUARY 2006.
13. PROPOSED ADT:
    RH LOT 1: 129 DU x 6/DU = 774 ADT
    RH LOT 2: 202 DU x 8/DU = 1,616 ADT
    RM LOT 3: 81 DU x 10/DU = 810 ADT
    RMH LOT 4: 188 DU x 8/DU = 1,504 ADT
    RH LOT 5: 56 DU x 10/DU = 560 ADT
    CF & PARK & RIDE = 150 & 140 ADT
14. HYDROMODIFICATION/WATER QUALITY BASINS PROPOSED IN LOTS 1, 2, 5, 9 AND 10 ARE APPROXIMATE AND SUBJECT TO CHANGE. SEE RICK ENGINEERING HYDROMODIFICATION ANALYSIS, DATED OCTOBER 2012, FOR VOLUMES AND DETAILS.
15. PERCENT OF SITE TO BE LANDSCAPED TO BE DETERMINED DURING SITE PLAN REVIEW.
16. FIRE HYDRANT FLOW REQUIREMENT IS 3,000 GPM. THIS PROJECT WILL BE SERVED BY 330 PRESSURE ZONE.
17. WATER AVERAGE DAY DEMAND IS 174,200 GPD. MAXIMUM DAY DEMAND IS 287,430 GPD. PEAK HOUR DEMAND IS 505,180 GPD.
18. MAXIMUM SEWER GENERATION IS 0.83 MGD (QUARRY CREEK: 0.38 MGD, OFFSITE: 0.45 MGD).
19. THE TOTAL NUMBER OF LOTS IS 17. LOTS 1 THRU 5 ARE RESIDENTIAL, LOTS 6, 9 AND 10 SHALL BE PUBLIC USE, LOTS 6, 8 THRU 13 AND 17 SHALL BE HOA LOTS MAINTAINED BY THE HOA, LOT 7 WILL BE SOLD TO A COMMUNITY FACILITY PROVIDER, LOTS 14 THRU 16 WILL BE OPEN SPACE LOTS WITH EASEMENTS TO BE DEDICATED TO A CONSERVANCY (HOA WILL BE VESTED OWNER).
20. CURRENT USE: VACANT USED FOR ROCK QUARRY; PROPOSED USE: RESIDENTIAL UNITS
21. THE PROPOSED POST-BMP TREATMENT ARE HYDROMODIFICATION/WATER QUALITY BASINS (SEE SHEETS 3 THRU 8) AND STORM FILTERS (LID) (OR THEIR EQUIVALENT). SEE PRELIMINARY WATER QUALITY TECHNICAL REPORT (DATED MARCH 2012).
22. AREA DRAINS AND OTHER INLETS SHALL HAVE "NO DUMPING" STENCILS.
23. TRAIL ALIGNMENTS SHOWN ARE APPROXIMATE AND SUBJECT TO REVISIONS DURING SITE PLAN REVIEW.
24. FLOOD ZONE DESIGNATION: AE
25. DRAINAGE FLOWS LABELED AS Q_U/V_U REPRESENT ULTIMATE DRAINAGE FLOWS PER DWG.470-5A (RECLAMATION GRADING PLAN) AND FLOWS LABELED AS Q_P/V_P REPRESENT FLOWS GENERATED BY THE PROJECT.

REGISTERED PROFESSIONAL ENGINEER
GREGORY M. SHIELDS
No. 42951
Exp. 03-31-14
CIVIL
STATE OF CALIFORNIA

GREGORY M. SHIELDS, R.C.E. 42951	DATE	REGISTRATION EXPIRES 03-31-14	DESIGNED BY:	PM REVIEW:	SURVEY REVIEW:
			RJ	MW	GH

VESTING TENTATIVE MAP
CT 11-04

QUARRY CREEK

PROJECT DESIGN CONSULTANTS
Planning | Landscape Architecture | Engineering | Survey
701 B Street, Suite 800 San Diego, CA 92101
619.235.6471 Tel 619.234.0349 Fax

REVISIONS
DATE: 10-21-11
DATE: 12-21-11
DATE: 03-26-12
DATE: 10-05-12

DESIGNED BY: RJ — DATE: 12-21-11
DRAWN BY: RJ — SCALE: 1"=300'
PROJECT ENGR. MW — JOB NO. 2468.00
BY: ____ DATED: ____

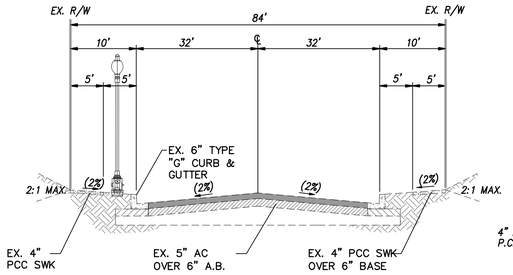

PUBLIC EXISTING MARRON ROAD

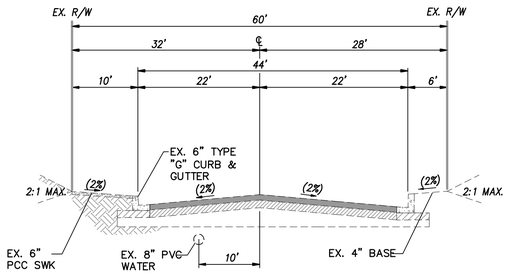

PUBLIC EXISTING PLAZA DRIVE

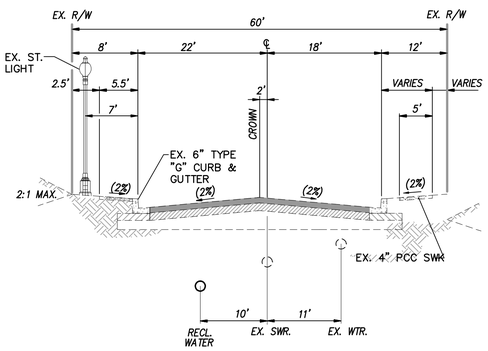

PUBLIC EXISTING TAMARACK AVENUE

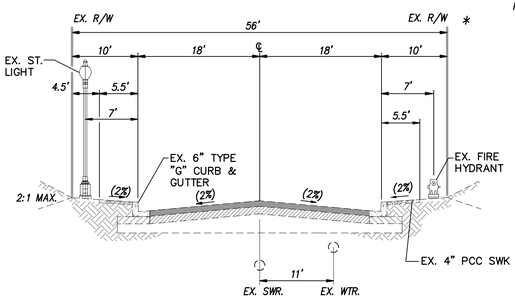

PUBLIC EXISTING SIMSBURY COURT

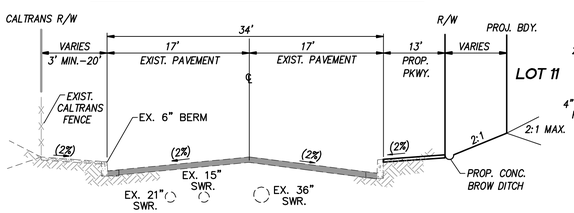

PUBLIC EXISTING HAYMAR DRIVE

1+00.00 – 4+20.00
FRONTING LOT 11

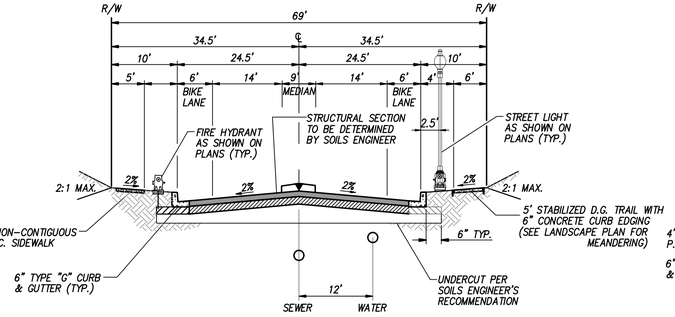

STREET 'A'
PUBLIC PROPOSED COLLECTOR STREET

1+05.80 – 1+43.80
NOTE: STA. 1+43.80 TO STA. 4+96.31 – TRANSITIONS FROM 69' ROW TO 60' ROW

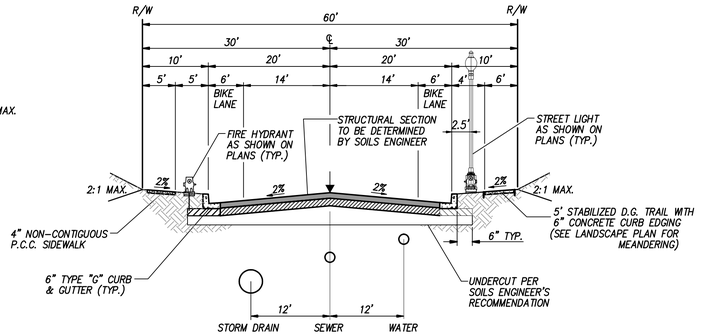

STREET 'A'
PUBLIC PROPOSED COLLECTOR STREET

4+96.31 – 10+00.00

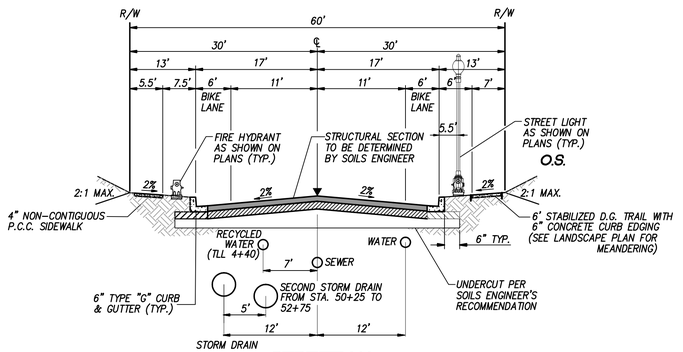

STREET 'A'
PUBLIC PROPOSED LOCAL STREET

10+00.00 – 56+43.20

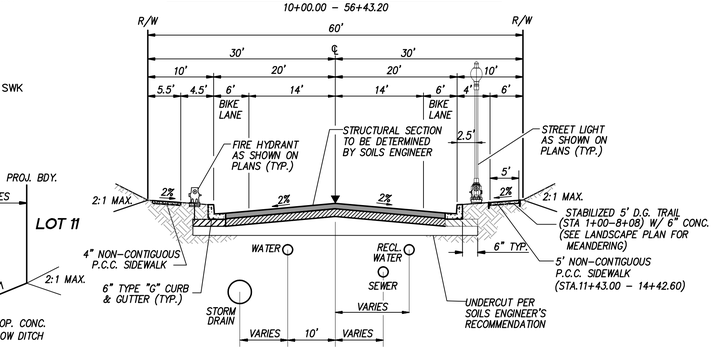

STREET 'B'
PUBLIC PROPOSED COLLECTOR STREET

1+00.00 – 8+00.00 (NORTH OF BRIDGE)

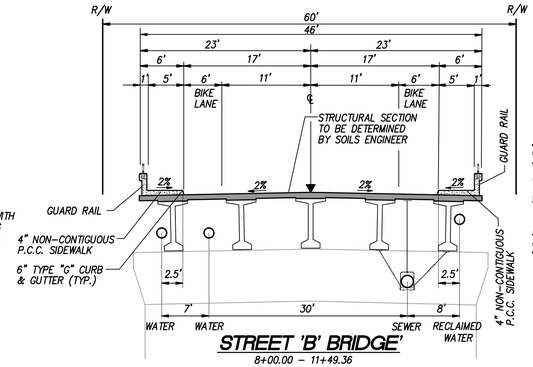

STREET 'B' BRIDGE'

8+00.00 – 11+49.36

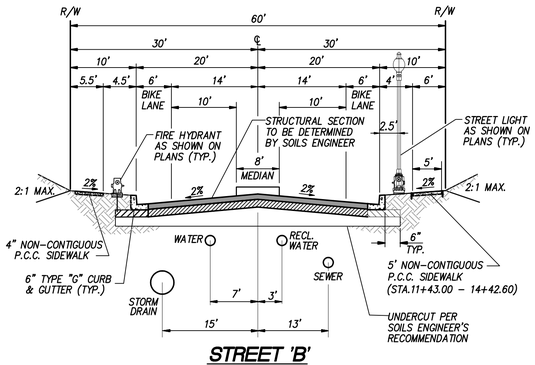

STREET 'B'
PUBLIC PROPOSED COLLECTOR STREET

11+49.36 – 14+42.60 (SOUTH OF BRIDGE)

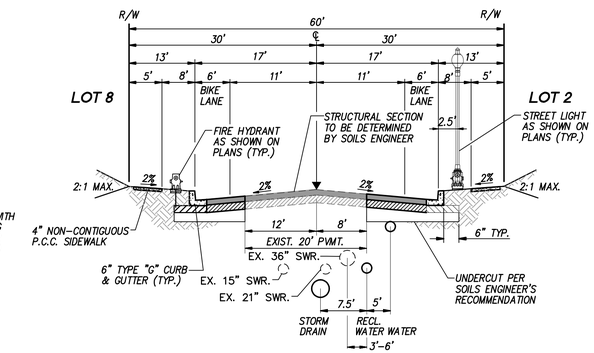

HAYMAR DRIVE
PUBLIC PROPOSED LOCAL STREET

5+52.01 – 11+42.92 (PCR)
FRONTING LOT 2

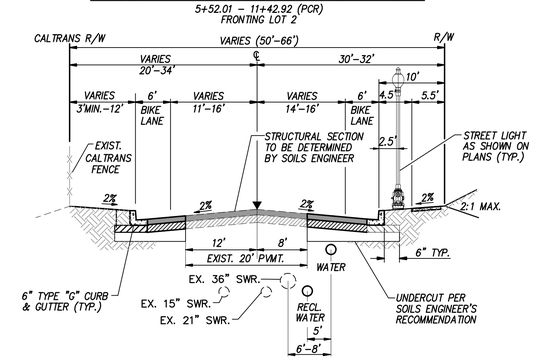

HAYMAR DRIVE
PUBLIC PROPOSED LOCAL STREET

12+39.18 (PCR) – 18+12.43

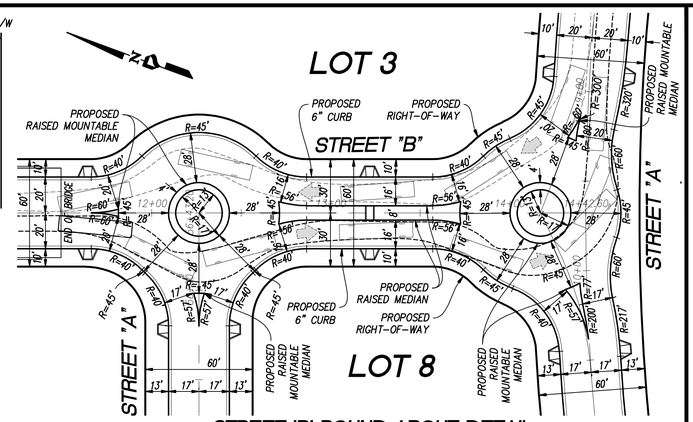

STREET 'B' ROUND ABOUT DETAIL

SCALE: 1"=40'

NOTE:
GEOMETRIC DESIGN AND PEDESTRIAN RAMP LOCATIONS SHOWN ABOVE ARE CONCEPTUAL FOR TENTATIVE MAP PURPOSES. FURTHER REFINEMENT OF GEOMETRIC DESIGN DURING FINAL ENGINEERING MAY BE REQUIRED.

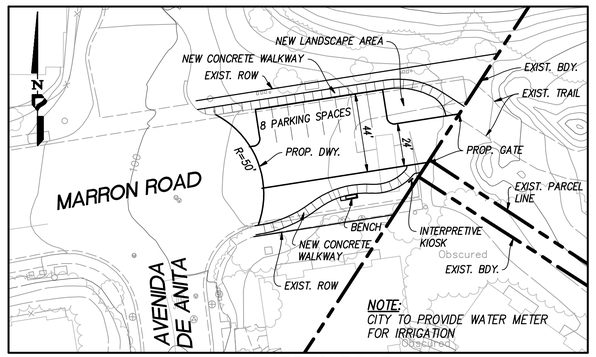

MARRON ROAD
WESTERLY TERMINUS DETAIL

SCALE: 1"=40'

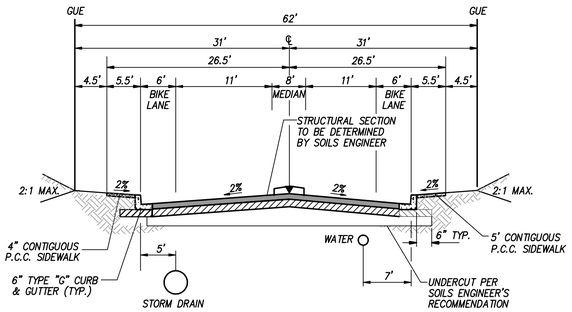

PVT. DRIVEWAY 'C'

1+45.78 – 1+89.00
NOTE: STA. 1+89.00 TO STA. 3+00.21 – TRANSITIONS FROM 63' ROW TO 55' ROW

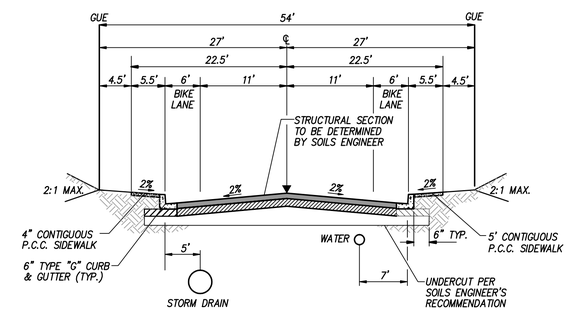

PVT. DRIVEWAY 'C'

3+00.21 – 7+21.72

VESTING TENTATIVE MAP
CT 11-04

QUARRY CREEK

PROJECT DESIGN CONSULTANTS
Planning | Landscape Architecture | Engineering | Survey
701 B Street, Suite 800
San Diego, CA 92101
619.236.0467 Fax
619.235.6471 Tel

REVISIONS
DATE: 10-21-11
DATE: 12-21-11
DATE: 03-26-12
DATE: 10-05-12

DATE: 12-21-11
SCALE: 1"= 60'
JOB NO. 2468.00

DESIGNED BY: RJ
DRAWN BY: RJ
PROJECT ENGR. MW

BY : DATED :

SHEET
2 OF 14

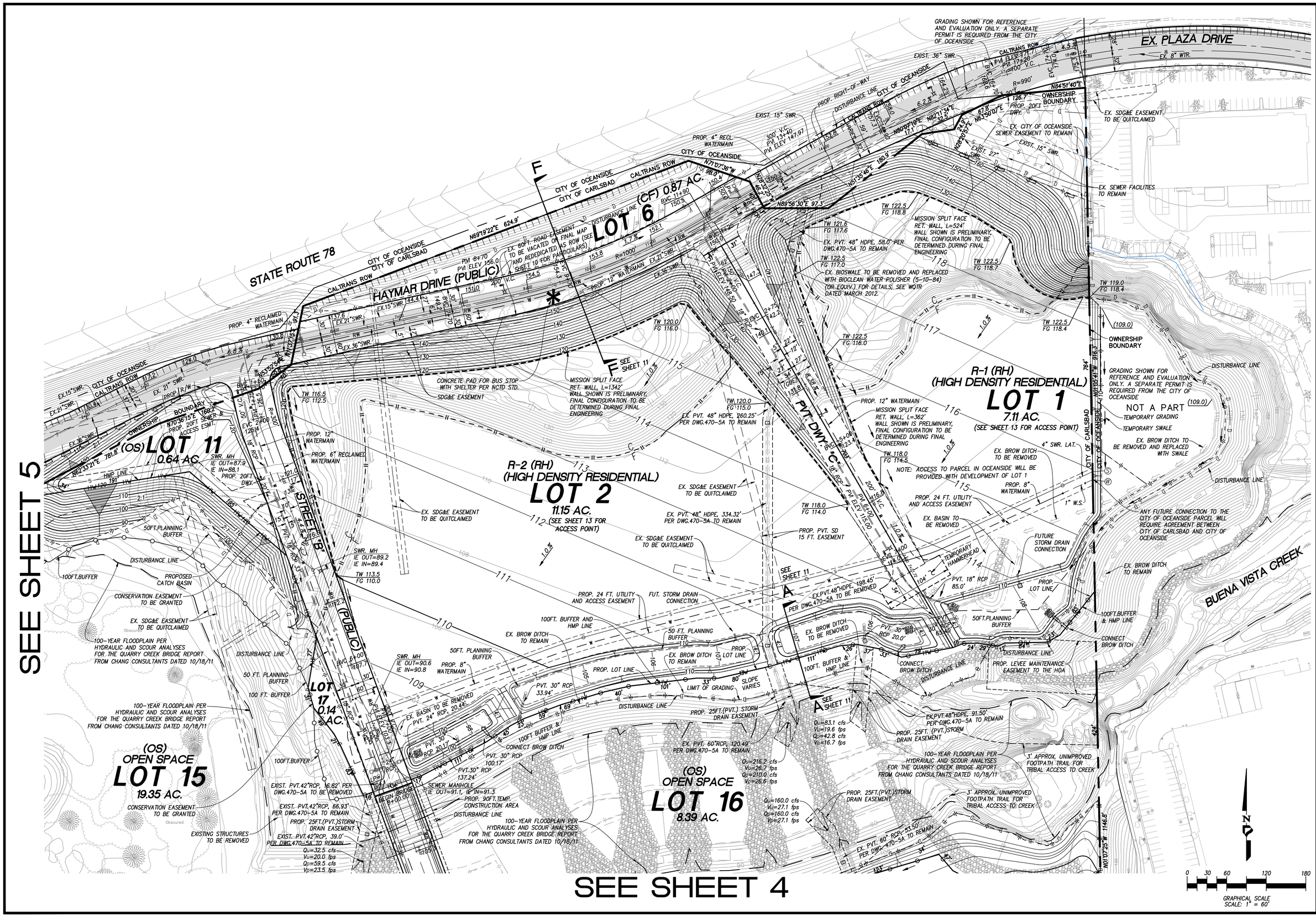

VESTING TENTATIVE MAP
CT 11-04

QUARRY CREEK

PROJECT DESIGN CONSULTANTS
Planning | Landscape Architecture | Engineering | Survey
701 B Street, Suite 800
San Diego, CA 92101
619.235.6471 tel
619.234.0349 fax

REVISIONS	
DATE: 10-21-11	
DATE: 12-21-11	
DATE: 03-26-12	
DATE: 10-05-12	

DESIGNED BY: RJ	DATE: 12-21-11		
DRAWN BY: RJ	SCALE: 1"= 60'		
PROJECT ENGR. MW	JOB NO. 2468.00	DATED :_____	BY :_____

SHEET
3 OF 14

SEE SHEET 3

SEE SHEET 5

SEE SHEET 6

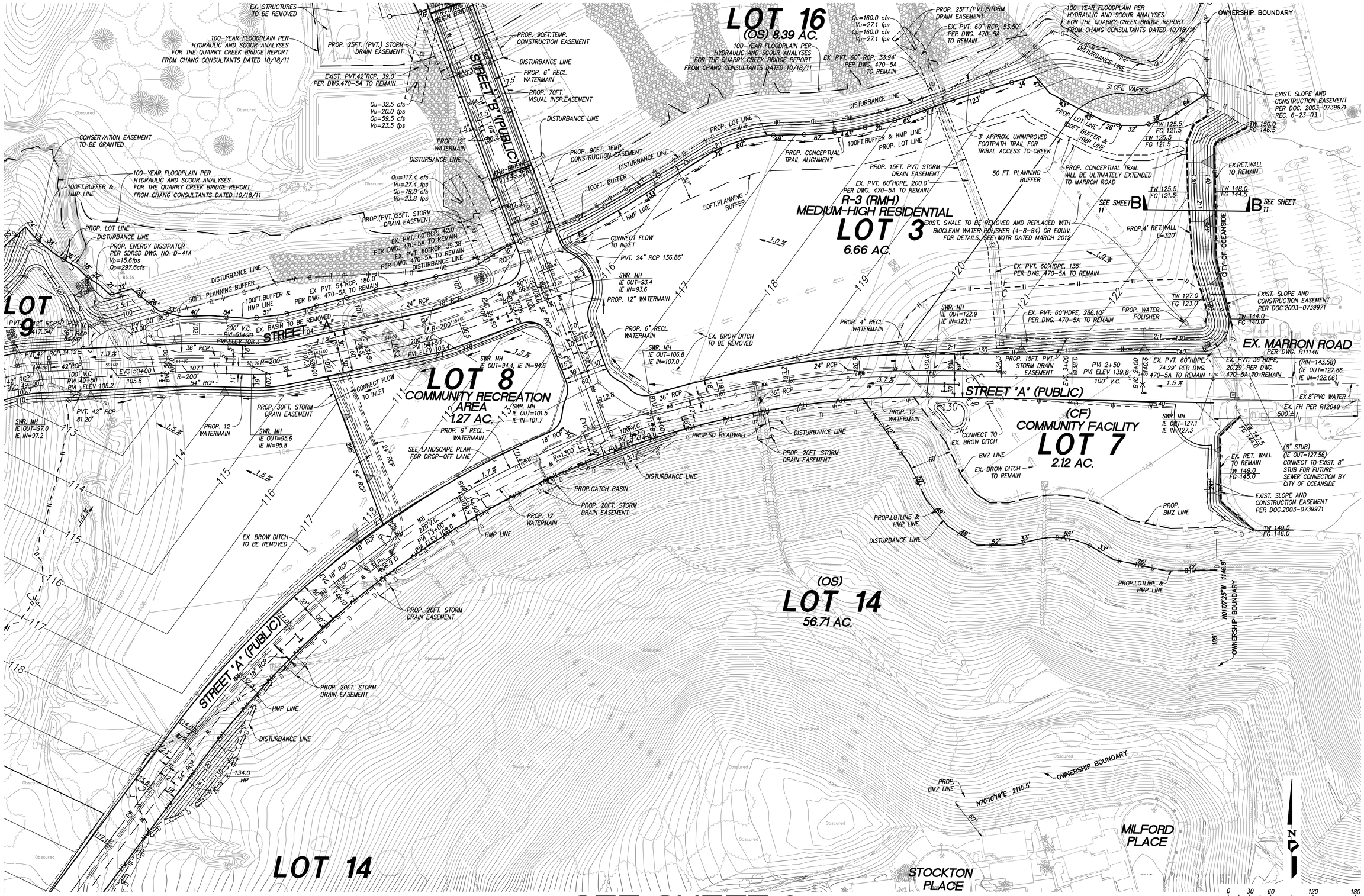

SEE SHEET 8

VESTING TENTATIVE MAP
CT 11-04

QUARRY CREEK

PROJECT DESIGN CONSULTANTS
Planning | Landscape Architecture | Engineering | Survey
701 B Street, Suite 800
San Diego, CA 92101
619.236.0464 | 619.236.0487 fax

REVISIONS	
DATE: 10-21-11	
DATE: 12-21-11	
DATE: 03-26-12	
DATE: 10-05-12	

DESIGNED BY: RJ
DRAWN BY: RJ
PROJECT ENGR. MW

DATE: 12-21-11
SCALE: 1" = 60'
JOB NO. 2468.00

BY: _____ DATED: _____

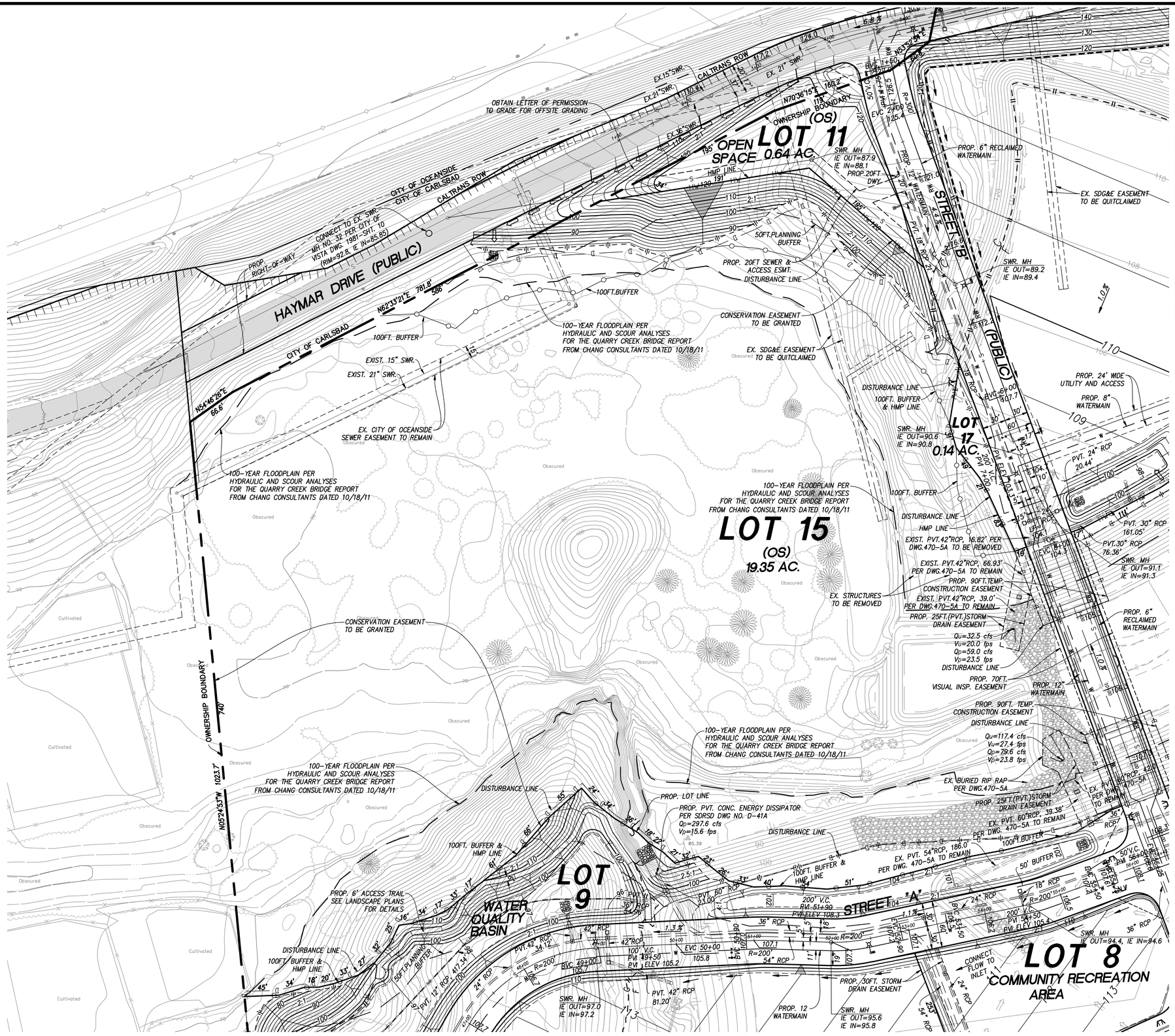

VESTING TENTATIVE MAP
CT 11-04

QUARRY CREEK

PROJECT DESIGN CONSULTANTS
Planning | Landscape Architecture | Engineering | Survey
701 B Street, Suite 800 San Diego, CA 92101
619.238.0467 Fax 619.238.0487 Tel

REVISIONS	
DATE: 10-21-11	
DATE: 12-21-11	
DATE: 03-26-12	
DATE: 10-05-12	

DESIGNED BY: RJ	DATE: 12-21-11
DRAWN BY: RJ	SCALE: 1" = 60'
PROJECT ENGR. MW	JOB NO. 2468.00
BY:	DATED:

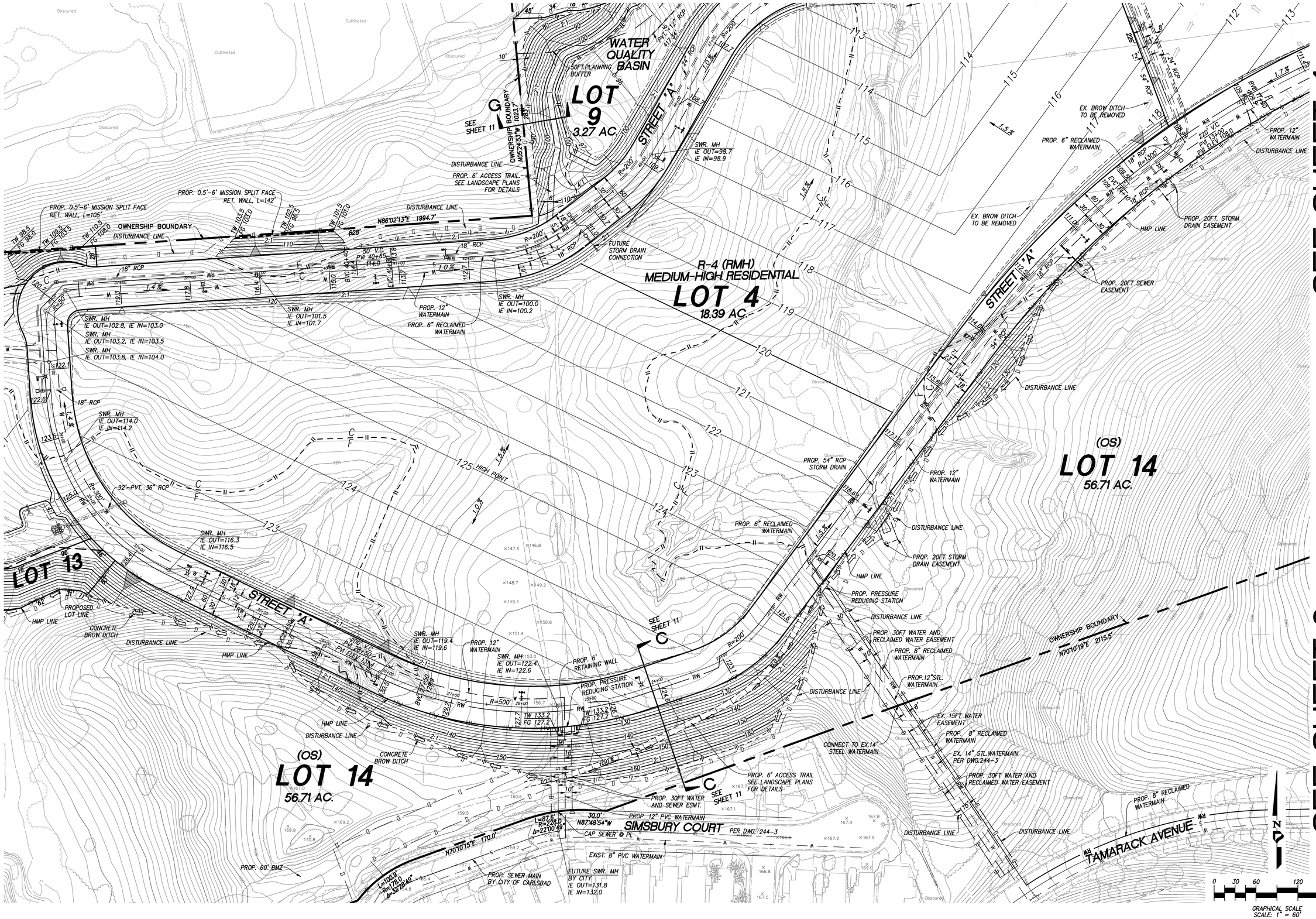

VESTING TENTATIVE MAP
CT 11-04

QUARRY CREEK

PROJECT DESIGN CONSULTANTS
Planning | Landscape Architecture | Engineering | Survey
701 B Street, Suite 800 San Diego, CA 92101
619.235.6471 Tel 619.234.0349 Fax

REVISIONS	
DATE: 10-21-11	
DATE: 12-21-11	
DATE: 03-26-12	
DATE: 10-05-12	

DESIGNED BY: RJ	DATE: 12-21-11	
DRAWN BY: RJ	SCALE: 1"= 60'	
PROJECT ENGR. MW	JOB NO. 2468.00	
BY :	DATED :	

SHEET 6 OF 14

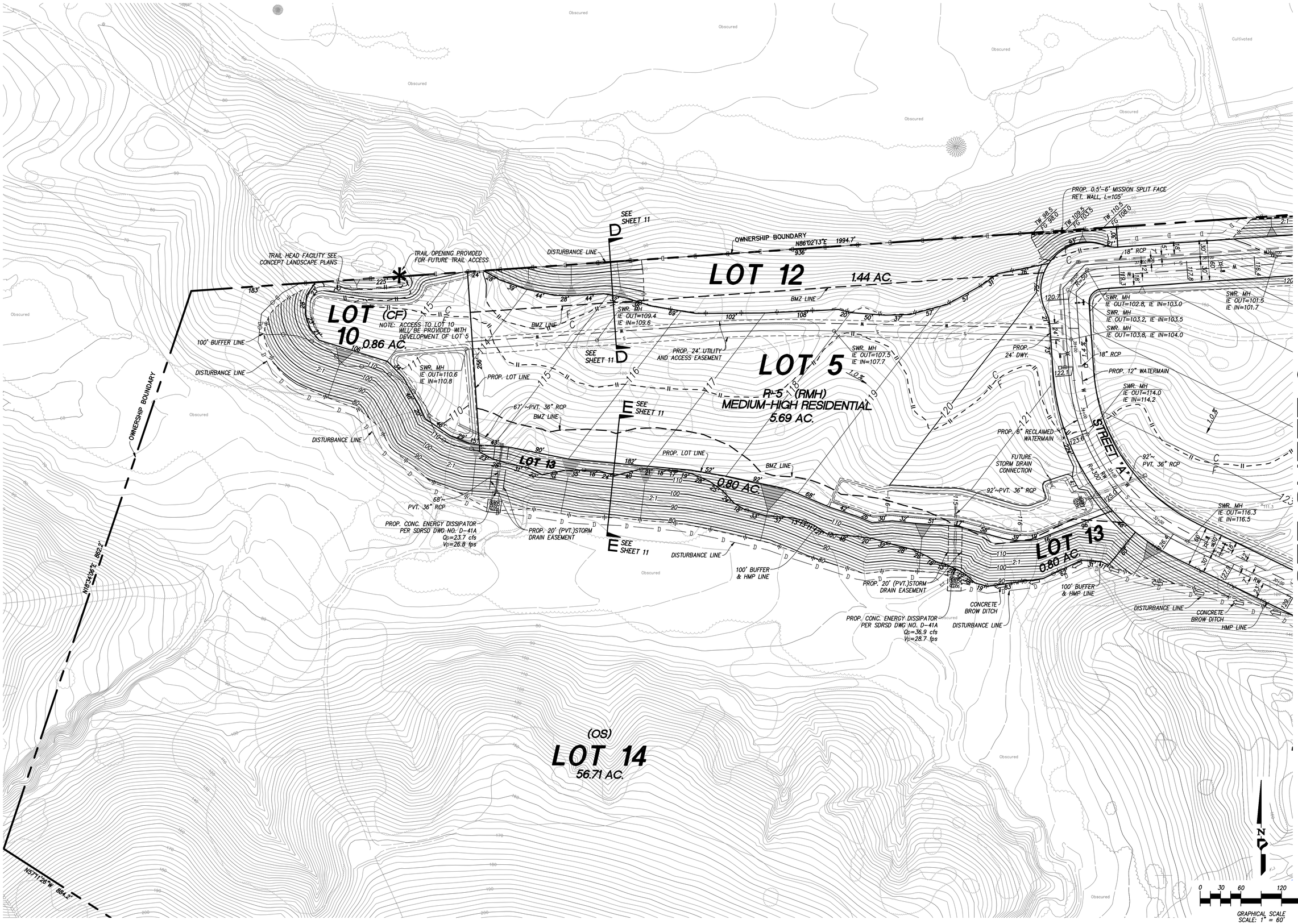

VESTING TENTATIVE MAP
CT 11-04

QUARRY CREEK

SEE SHEET 9

PROJECT DESIGN CONSULTANTS
Planning | Landscape Architecture | Engineering | Survey
701 B Street, Suite 800
San Diego, CA 92101
619.235.6471 tel
619.234.0349 fax

REVISIONS	
DATE: 10-21-11	
DATE: 12-21-11	
DATE: 03-26-12	
DATE: 10-05-12	

DESIGNED BY: RJ
DRAWN BY: RJ
PROJECT ENGR. MW

DATE: 12-21-11
SCALE: 1"= 60'
JOB NO. 2468.00

BY: _____ DATED: _____

SHEET 7 OF 14

SEE SHEET 4

SEE SHEET 6

VESTING TENTATIVE MAP
CT 11-04

QUARRY CREEK

PROJECT DESIGN CONSULTANTS
Planning | Landscape Architecture | Survey
701 B Street, Suite 800
San Diego, CA 92101
619.236.0467 | 619.236.0049 Fax

REVISIONS
DATE: 10-21-11
DATE: 12-21-11
DATE: 03-26-12
DATE: 10-05-12

DESIGNED BY: RJ
DRAWN BY: RJ
PROJECT ENGR. MW
DATE: 12-21-11
SCALE: 1"= 60'
JOB NO. 2468.00

BY : _____ DATED : _____

ROAD CLASSIFICATION: COLLECTOR
V= 30 mph
MIN. SSD= 200 ft.

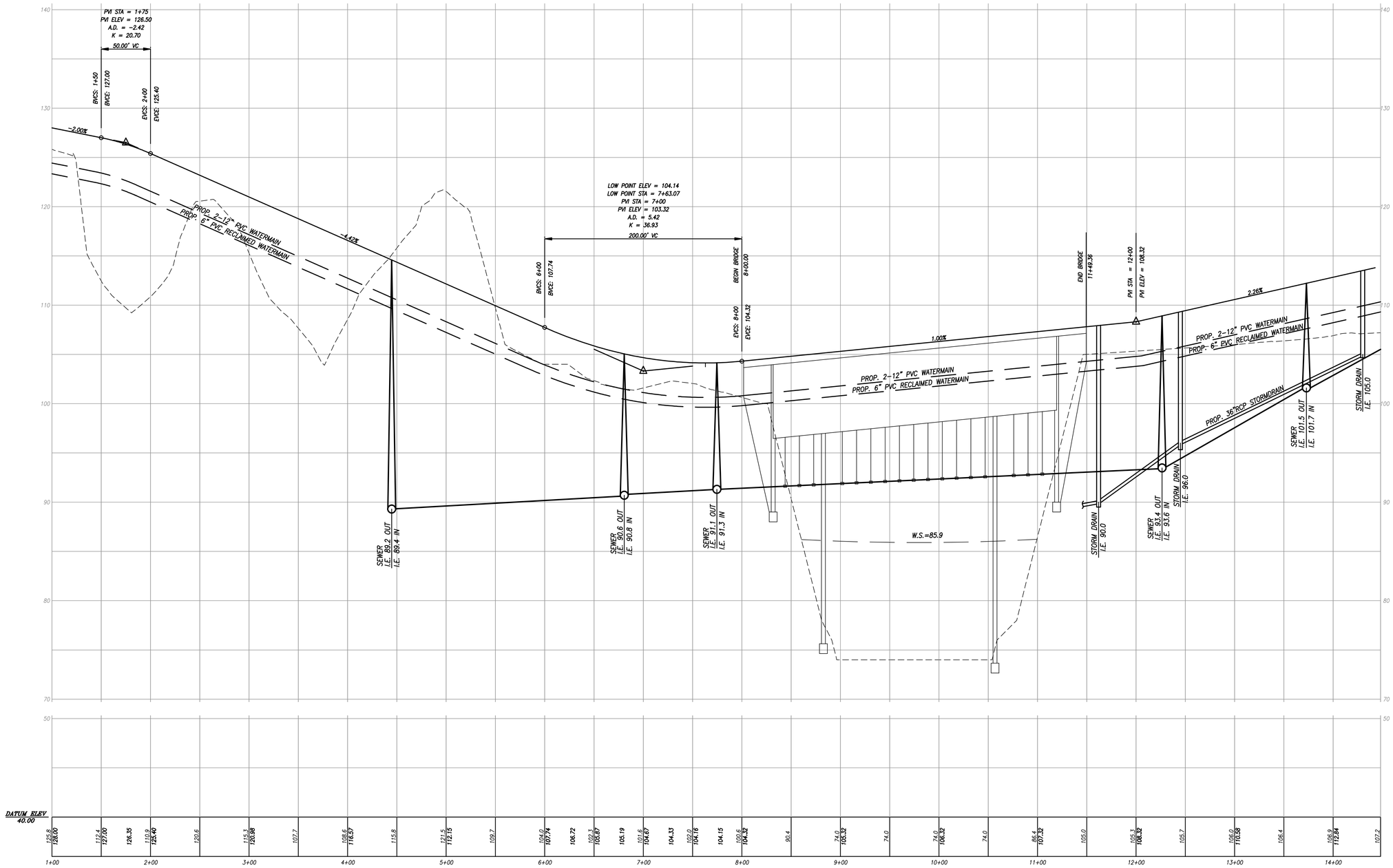

PROPOSED STREET 'B' PROFILE

SCALE: HORIZ. 1"=50', VERT. 1"=5'

VESTING TENTATIVE MAP
CT 11-04

QUARRY CREEK

PROJECT DESIGN CONSULTANTS
Planning | Landscape Architecture | Engineering | Survey
701 B Street, Suite 800
San Diego, CA 92101
619.235.8471 tel
619.234.0349 fax

REVISIONS
DATE: 10-21-11
DATE: 12-21-11
DATE: 03-26-12
DATE: 10-05-12

DESIGNED BY: RJ
DRAWN BY: RJ
PROJECT ENGR. MW
DATE: 12-21-11
SCALE:
JOB NO. 2468.00

BY :
DATED :

SHEET
9 OF 14

PROJECT REPORT PREPARED BY:
FIRST AMERICAN TITLE COMPANY

ORDER #: 3146604 (06) DATED: OCTOBER 7 AND 13, 2011

ITEMS #: 1–5, 13, 18–19 AND 24–26
ARE NOT DEFINED LOCATIONS AND ARE NOT PLOTTED

ITEMS #: 6, 7, 8, 10, 14, 15, 17 AND 22
ARE DEFINED AND ARE PLOTTED

ITEMS #: 9, 11, 12, 16, 20 AND 23
WERE DELETED

TOPOGRAPHIC AND ENCUMBRANCE MAP

EASEMENTS/ENCUMBRANCES

PR ITEM NO.	DESCRIPTION	STATUS OF EASEMENT
6	AN EASEMENT FOR PUBLIC ROAD AND INCIDENTAL PURPOSES, RECORDED JUNE 19, 1928 IN BOOK 1496, PAGE 100 OF DEEDS. IN FAVOR OF: THE COUNTY OF SAN DIEGO AFFECTS: PARCEL A	EASEMENT TO BE VACATED ON FINAL MAP AND REDEDICATED AS RIGHT–OF–WAY
7	AN EASEMENT FOR PUBLIC ROAD AND INCIDENTAL PURPOSES, RECORDED NOVEMBER 25, 1931 IN BOOK 56, PAGE 255 OF OFFICIAL RECORDS. IN FAVOR OF: THE COUNTY OF SAN DIEGO AFFECTS: PARCEL A	EASEMENT TO BE VACATED ON FINAL MAP AND REDEDICATED AS RIGHT–OF–WAY
8	AN EASEMENT FOR EITHER OR BOTH POLE LINES, UNDERGROUND CONDUITS AND INCIDENTAL PURPOSES, RECORDED MAY 11, 1949 IN BOOK 3200, PAGE 449 OF OFFICIAL RECORDS. IN FAVOR OF: SAN DIEGO GAS AND ELECTRIC COMPANY AFFECTS: PARCEL A	EASEMENT TO BE QUITCLAIMED
10	AN EASEMENT FOR SEWER PIPE LINE AND INCIDENTAL PURPOSES, RECORDED APRIL 20, 1961 AS INSTRUMENT NO. 68841 OF OFFICIAL RECORDS. IN FAVOR OF: THE CITY OF OCEANSIDE AFFECTS: PARCEL A	EASEMENT TO REMAIN
14	AN EASEMENT FOR EITHER OR BOTH POLE LINES, UNDERGROUND CONDUITS AND INCIDENTAL PURPOSES, RECORDED MARCH 31, 1966 AS INSTRUMENT NO. 54146 OF OFFICIAL RECORDS. IN FAVOR OF: SAN DIEGO GAS AND ELECTRIC COMPANY AFFECTS: PARCEL A	EASEMENT TO BE QUITCLAIMED
15	AN EASEMENT FOR EITHER OR BOTH POLE LINES, UNDERGROUND CONDUITS AND INCIDENTAL PURPOSES, RECORDED JUNE 29, 1967 AS INSTRUMENT NO. 94628 OF OFFICIAL RECORDS. IN FAVOR OF: SAN DIEGO GAS AND ELECTRIC COMPANY AFFECTS: PARCEL A	EASEMENT TO BE QUITCLAIMED
17	AN EASEMENT FOR LANDSCAPE AND DRAINAGE MAINTENANCE AND FOR SLOPE STABILIZATION, INCLUDING BUT NOT LIMITED TO EROSION CONTROL AND INCIDENTAL PURPOSES, RECORDED MARCH 7, 1986 AS INSTRUMENT NO. 86–090570 OF OFFICIAL RECORDS. IN FAVOR OF: TREETOPS UNLIMITED, A JOINT VENTURE AFFECTS: PARCELS A AND B	EASEMENT TO REMAIN
22	THE TERMS AND PROVISIONS CONTAINED IN THE DOCUMENT ENTITLED "GRANT OF PERPETUAL SLOPE EASEMENT AND TEMPORARY CONSTRUCTION EASEMENT" RECORDED JLINE 23, 2003 AS INSTRUMENT NO. 2003–0739971 OF OFFICIAL RECORDS.	EASEMENT TO REMAIN

LINE TABLE		
LINE	LENGTH	BEARING
L1	66.6'	N54°46'26"E
L2	160.2'	N70°36'15"E
L3	60.8'	N53°52'54"E
L4	91.3'	N11°37'15"E
L5	98.0'	N71°07'36"W
L6	46.2'	N28°32'25"W
L7	97.3'	N89°56'30"E
L8	180.9'	N51°35'46"E
L9	17.1'	N80°07'10"E
L10	32.5'	N82°11'34"E
L11	24.9'	N28°20'57"E
L12	67.8'	N63°50'07"E
L13	126.7'	N84°51'40"E

PORTIONS IN EXCESS OF THE REQUIRED RIGHT–OF–WAY FOR HAYMAR DRIVE SHALL BE CONVEYED TO PROPERTY OWNER VIA SEPARATE ACTION.

CITY OF CARLSBAD PROPERTY RIGHT–OF–WAY TO BE DEDICATED BY THE CITY. PORTIONS IN EXCESS OF THE REQUIRED RIGHT–OF–WAY SHALL REMAIN CITY PROPERTY.

CITY OF OCEANSIDE PROPERTY RIGHT–OF–WAY TO BE DEDICATED BY THE CITY OF OCEANSIDE. PORTIONS IN EXCESS OF THE REQUIRED RIGHT–OF–WAY SHALL REMAIN CITY PROPERTY.

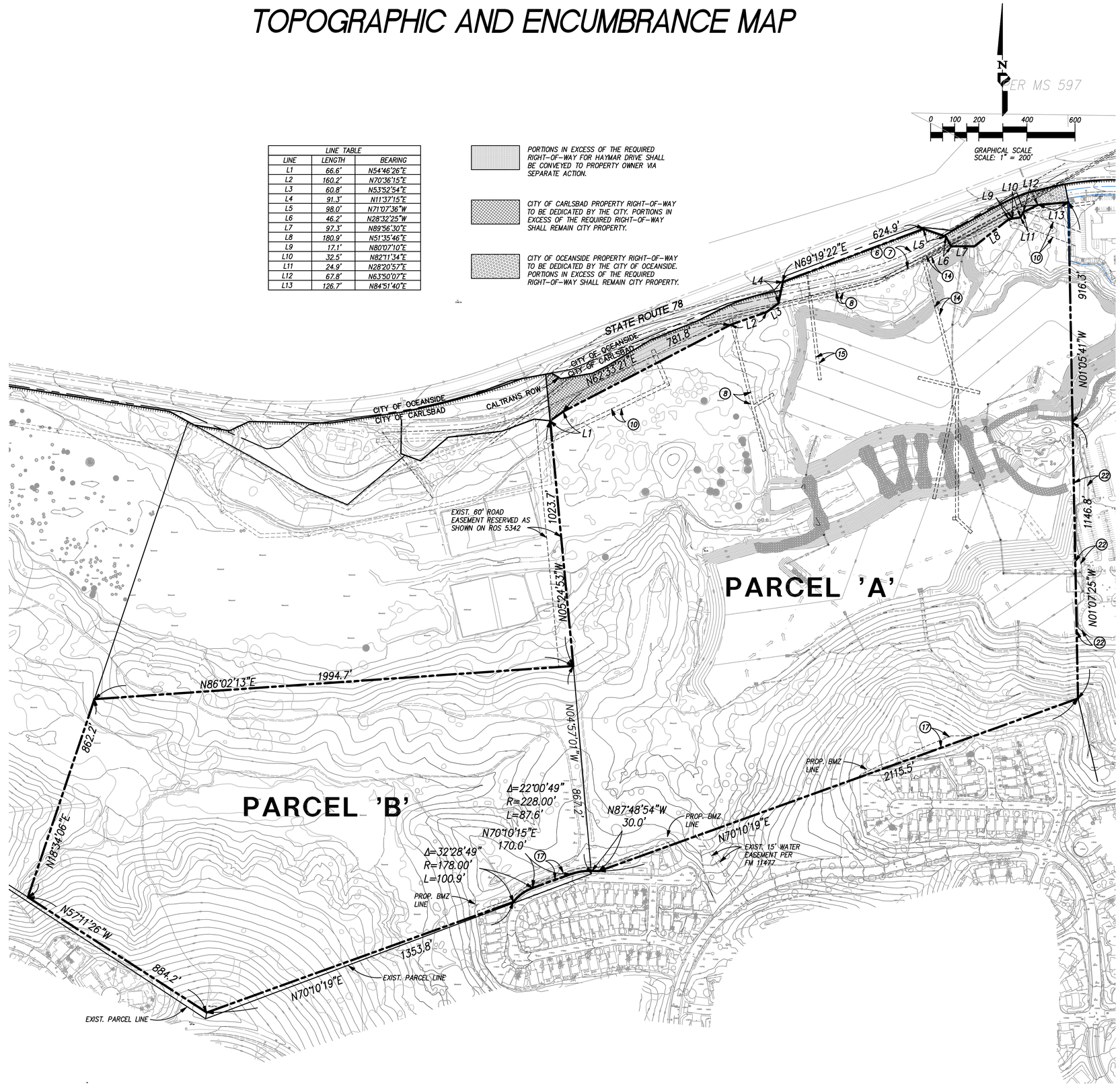

VESTING TENTATIVE MAP
CT 11–04

QUARRY CREEK

PROJECT DESIGN CONSULTANTS
Planning | Landscape Architecture | Engineering | Survey
701 B Street, Suite 800 San Diego, CA 92101
619.236.0467 Fax 619.236.0487

REVISIONS
DATE: 10–21–11
DATE: 12–21–11
DATE: 03–26–12
DATE: 10–05–12

DESIGNED BY: RJ DATE: 12–21–11
DRAWN BY: RJ SCALE: 1"= 200'
PROJECT ENGR. MW JOB NO. 2468.00

BY : DATED :

SHEET
10 OF 14

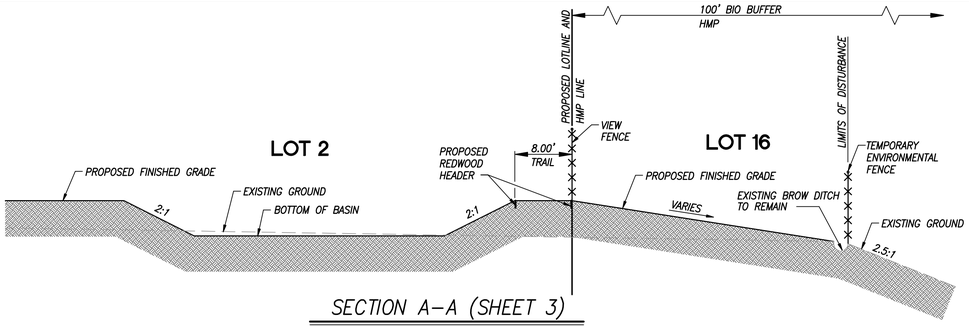

SECTION A–A (SHEET 3)

NOT TO SCALE

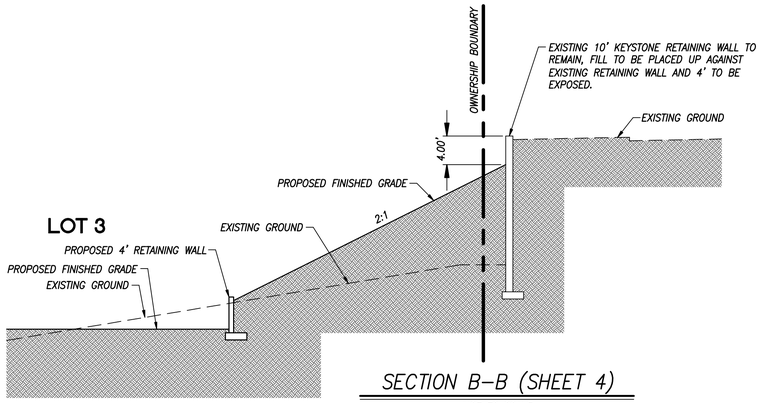

SECTION B–B (SHEET 4)

NOT TO SCALE

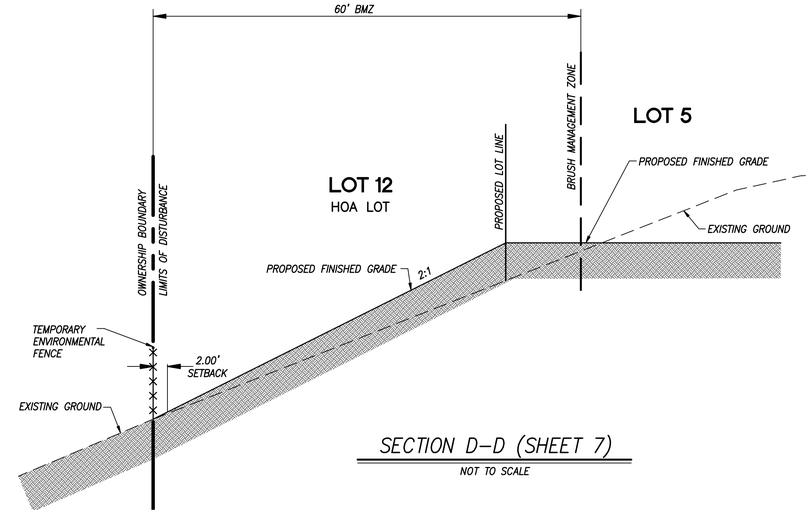

SECTION D–D (SHEET 7)

NOT TO SCALE

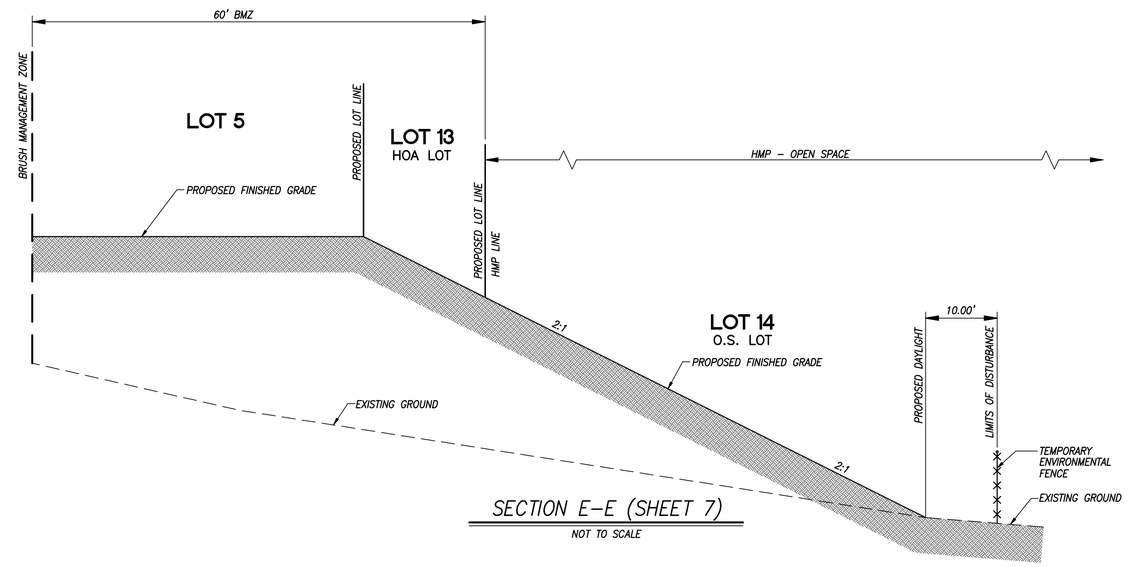

SECTION E–E (SHEET 7)

NOT TO SCALE

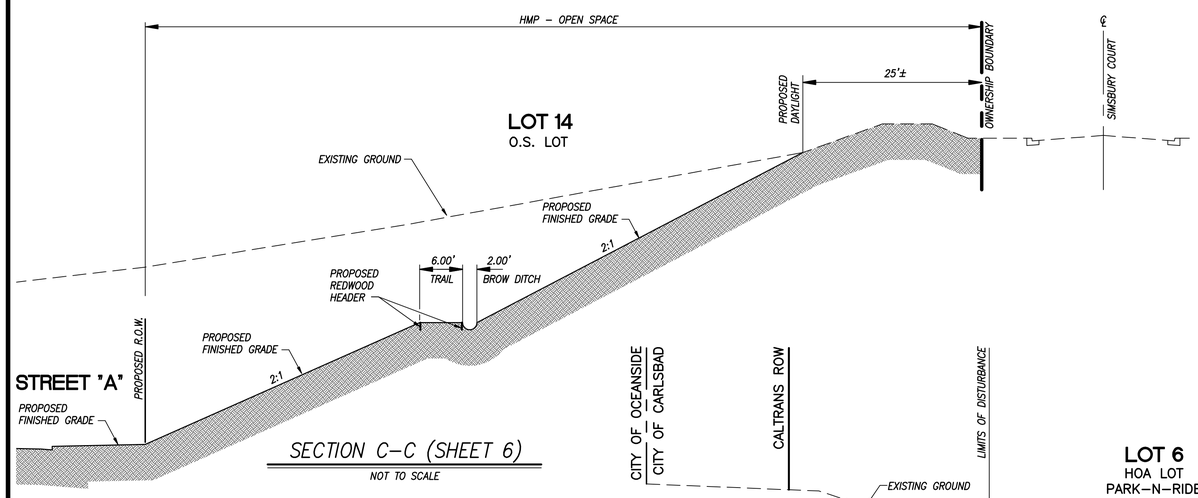

SECTION C–C (SHEET 6)

NOT TO SCALE

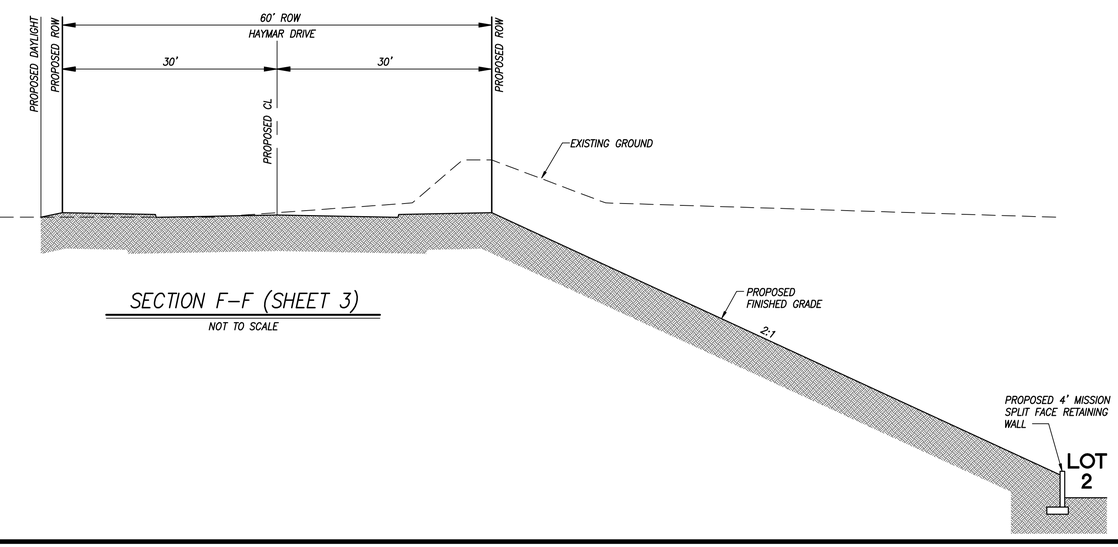

SECTION F–F (SHEET 3)

NOT TO SCALE

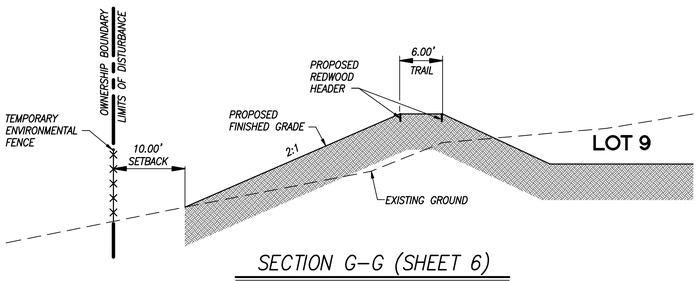

SECTION G–G (SHEET 6)

NOT TO SCALE

VESTING TENTATIVE MAP CT 11–04

QUARRY CREEK

PROJECT DESIGN CONSULTANTS
Planning | Landscape Architecture | Engineering | Survey
701 B Street, Suite 800 San Diego, CA 92101
619.235.6471 Tel 619.234.0349 Fax

REVISIONS	
DATE: 10–21–11	
DATE: 12–21–11	
DATE: 03–26–12	
DATE: 10–05–12	

DESIGNED BY: RJ	DATE: 12–21–11	BY :	DATED :
DRAWN BY: RJ	SCALE:		
PROJECT ENGR. MW	JOB NO. 2468.00		

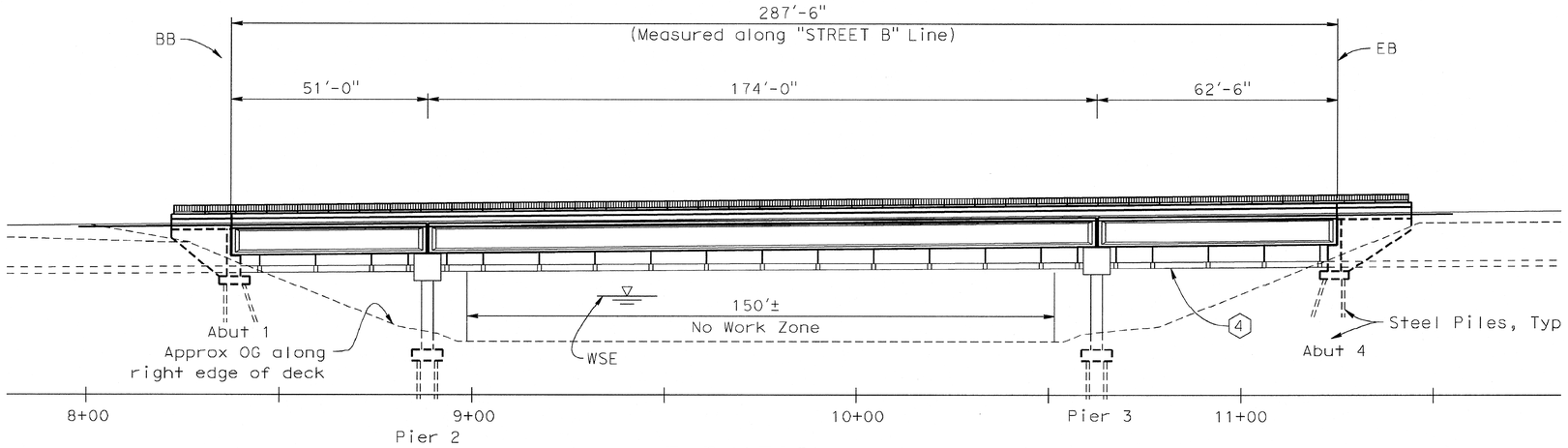

ELEVATION

1"=20'

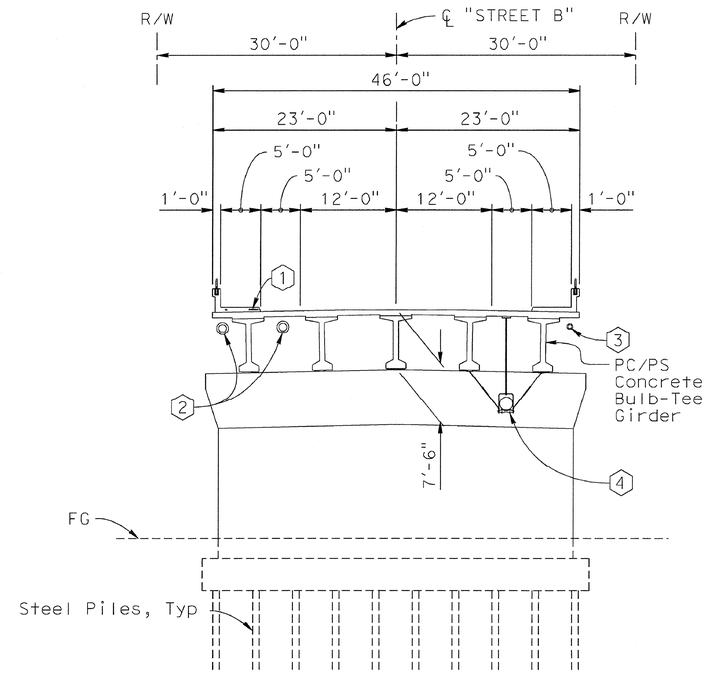

TYPICAL SECTION

1"=10'

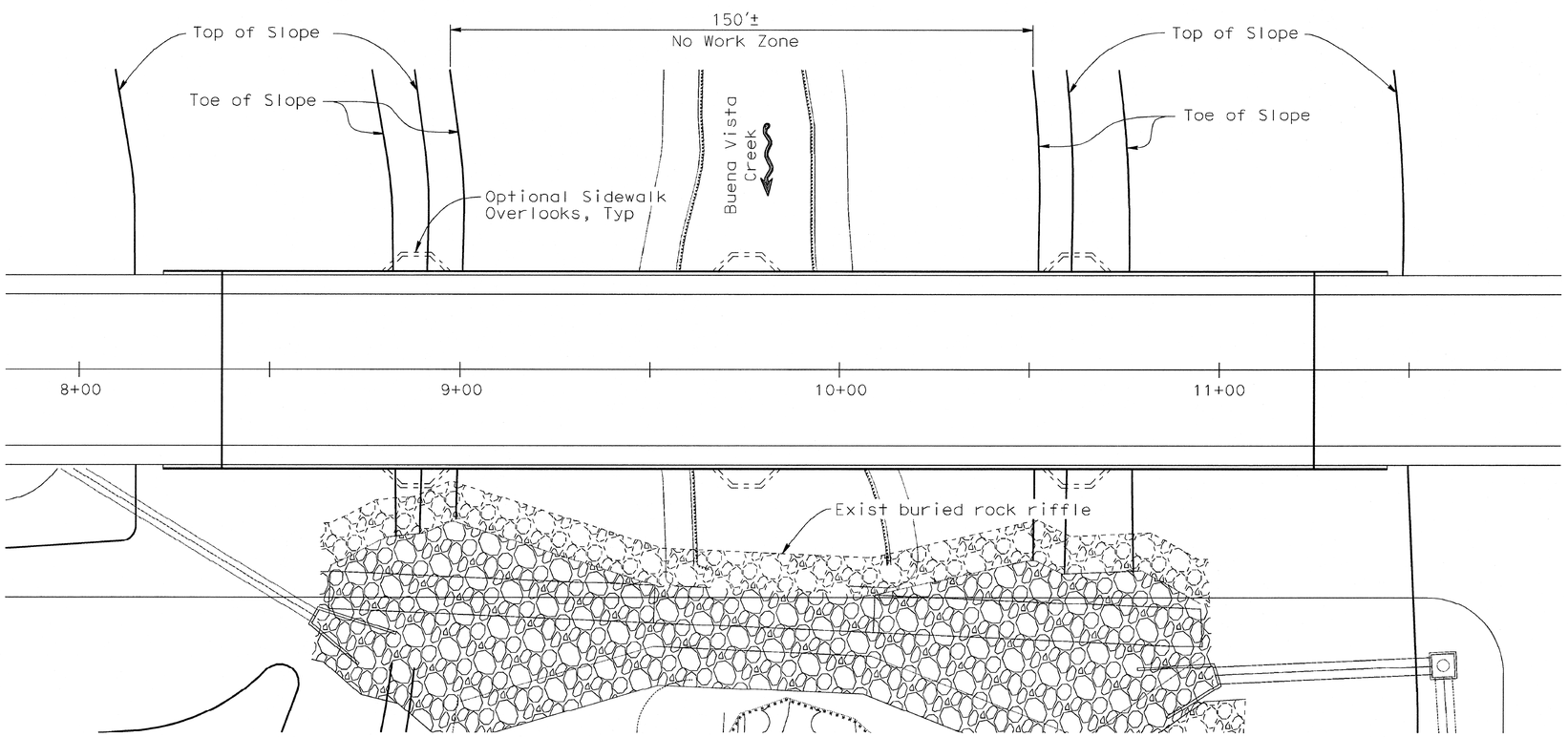

PLAN

1"=20'

UTILITIES

1 - Dry Utilities

2 - 12" Water (2nd line if needed)

3 - 6" Reclaimed Water

4 - 12" Sewer in 18" casing

T·Y·LIN INTERNATIONAL
404 CAMINO DEL RIO SOUTH, SUITE 700, SAN DIEGO, CA. 92108
(619) 692-1920 www.tylin.com

CITY APPROVED CHANGES

NO.	DESCRIPTION	APPROVED BY	DATE

BENCH MARK:

DESCRIPTION:

LOCATION:

RECORD FROM:

ELEV: DATUM:

SHEET 12	CITY OF OCEANSIDE ENGINEERING DEPARTMENT	14 SHEETS

PLANS FOR

QUARRY CREEK BRIDGE

PLANNING STUDY

APPROVED

CITY ENGINEER

ENGINEER OF WORK	CHECKED BY / APPROVAL DATE	DRAWN BY
R.C.E.		

NOTE:

EXACT LOCATION OF FUTURE UTILITY AND ACCESS LOCATIONS TO BE DETERMINED IN SITE PLANNING PHASE

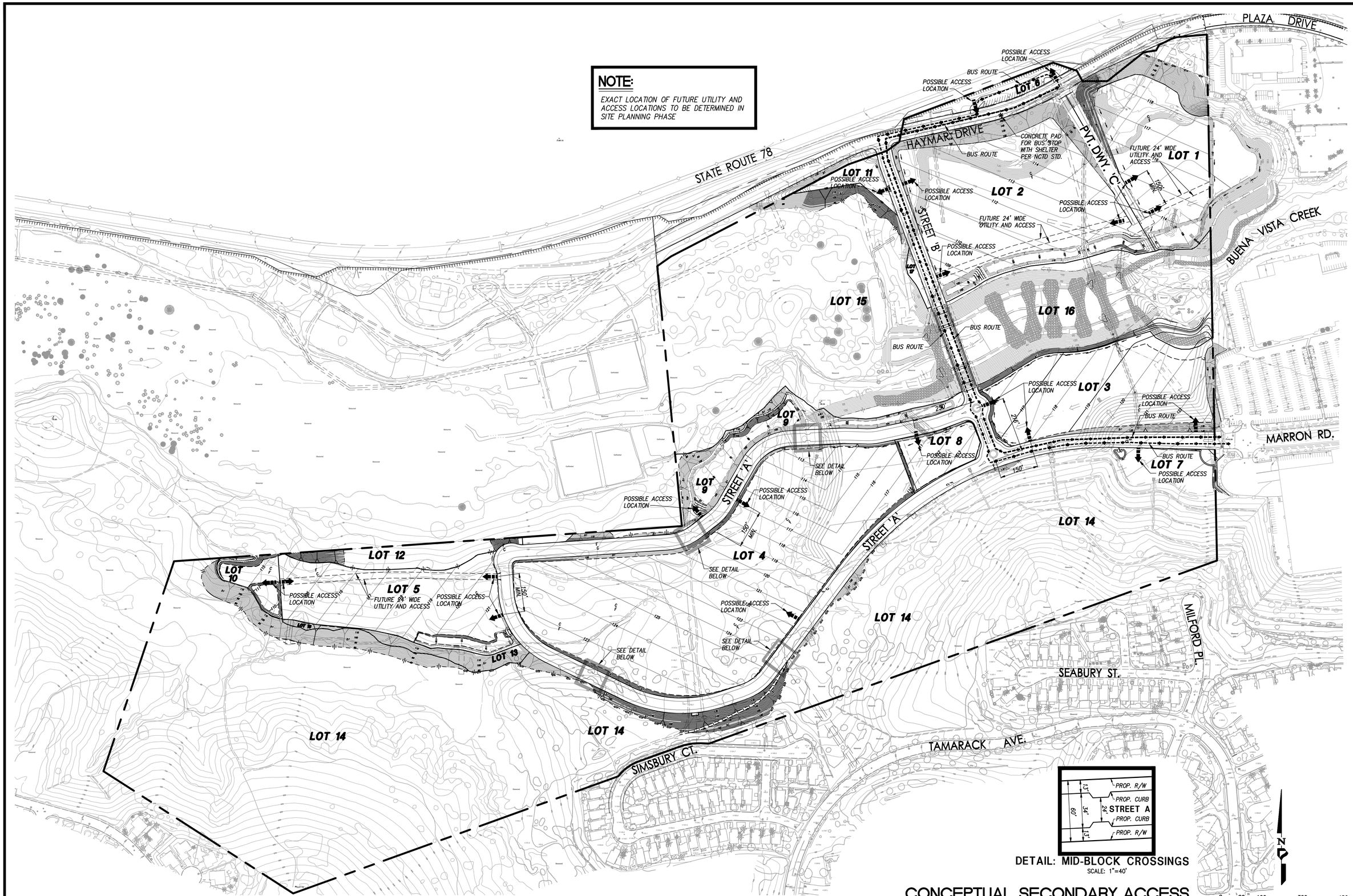

CONCEPTUAL SECONDARY ACCESS AND BUS ROUTE EXHIBIT

VESTING TENTATIVE MAP
CT 11-04

QUARRY CREEK

PROJECT DESIGN CONSULTANTS
Planning | Landscape Architecture | Engineering | Survey
701 B Street, Suite 800
San Diego, CA 92101
619.236.0464 | Tel
619.236.0467 | Fax

REVISIONS	
DATE: 10-21-11	
DATE: 12-21-11	
DATE: 03-26-12	
DATE: 10-05-12	

DESIGNED BY:	RJ	DATE:	12-21-11
DRAWN BY:	RJ	SCALE:	
PROJECT ENGR.	MW	JOB NO.	2468.00

BY: _____ DATED: _____

SHEET 13 OF 14

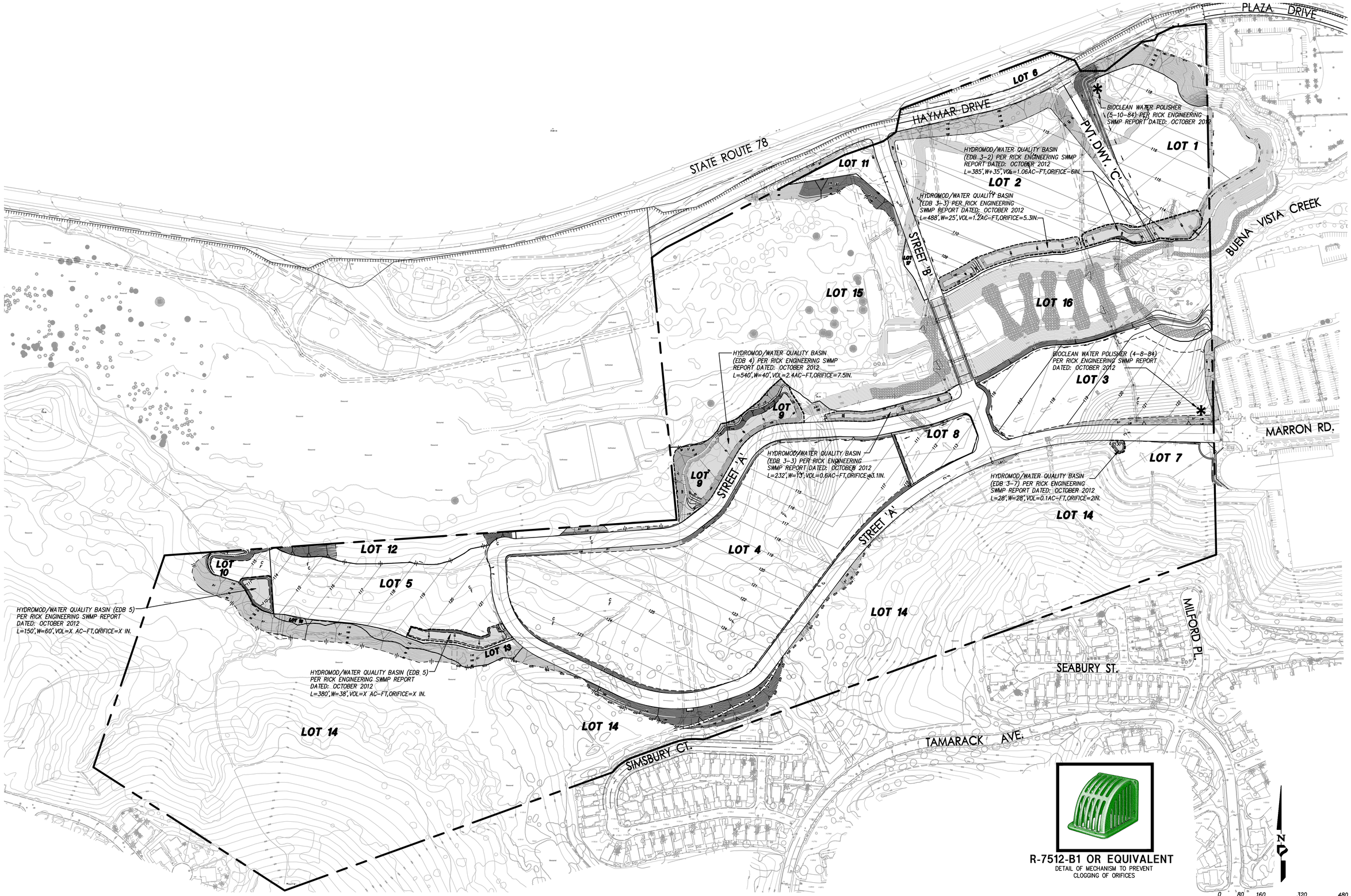

BMP EXHIBIT/MAP

VESTING TENTATIVE MAP
CT 11-04

QUARRY CREEK

PROJECT DESIGN CONSULTANTS
Planning | Landscape Architecture | Engineering | Survey
701 B Street, Suite 800
San Diego, CA 92101
619.235.6471 | 619.234.0349 Fax

REVISIONS	
DATE: 10-21-11	
DATE: 12-21-11	
DATE: 03-26-12	
DATE: 10-05-12	

DESIGNED BY: RJ
DRAWN BY: RJ
PROJECT ENGR. MW

DATE: 12-21-11
SCALE:
JOB NO. 2468.00

BY : _____ DATED : _____

SHEET
14 OF 14