# PRELIMINARY DRAINAGE REPORT

# QUARRY CREEK

City of Carlsbad, CA
October 2012

CT 11-04

PROJECT DESIGN CONSULTANTS

# PRELIMINARY DRAINAGE REPORT

# QUARRY CREEK

City of Carlsbad, CA
October 2012

CT 11-04

Prepared For:

Quarry Creek Investors, LLC
2750 Womble Road
San Diego, CA 92106

Prepared By:

**PROJECT DESIGN CONSULTANTS**
Planning | Landscape Architecture | Environmental | Engineering | Survey

701 B Street, Suite 800
San Diego, CA 92101
619.235.6471 Tel
619.234.0349 Fax

PDC Job No. 2468

REGISTERED PROFESSIONAL ENGINEER
DEBBY SUE REECE
No. C56148
EXP. 12-31-12
CIVIL
STATE OF CALIFORNIA

Prepared by: C. Pack, P.E.
*Under the supervision of*

Debby Reece, PE RCE 56148
Registration Expires 12/31/12

| | | | |
|---|---|---|---|
| **DATE:** | October 3, 2012 | **PDC JOB NBR:** | 2468 |
| **TO:** | Tim Gnibus, HDR | **PROJECT NBR:** | CT 11-04 |
| **FROM:** | Chelisa Pack, Project Design Consultants | | |
| **SUBJECT:** | Technical Review of Preliminary Drainage Report, Response to 10/02/2012 HDR's Comments (Third Party Reviewer) | | |

**Comment 1 from HDR Comment Letter:** There are multiple references within the report to Drawing 470-5A for the Hanson reclamation project. If this report is to function as a stand alone document then it should contain the As-built drawings that are referenced

***Response:*** The Hanson Reclamation Project is currently under construction. No As-builts for this project are available at this time.

**Comment 2 from HDR Comment Letter:** The project proposes to construct within a FEMA regulated floodplain and floodway and addresses impacts from these encroachments by referencing a Chang floodplain report and CLOMR. These documents should be included as an attachment to the report or the important data should be included in the report text, such as water surface elevations, flow rates, mitigation of floodplain impacts, etc.

***Response:*** This report is a companion report to the Chang floodplain report. It is not necessary to duplicate the data herein. However, the results of the Chang floodplain report are now summarized in Section 5 of this report.

**Comment 3 from HDR Comment Letter:** There is no discussion of the emergency outlet facilities for the extended detention basins and any required energy dissipation features.

***Response:*** Section 3.3 of this report has been expanded to include a discussion of emergency overflow.

**Comment 4 from HDR Comment Letter:** If this report is going to address the CEQA requirements in Section 6 the supporting information should be included. Specifically, conclusions for the CEQA flood impacts need to be supported with more than statements.

***Response:*** The CEQA section of this report has been revised to summarize the response with respect to flooding.

**Comment 5 from HDR Comment Letter:** The proposed bridge has piers that will be within a 100-year flood hazard area that will impede or redirect flows. Therefore the answer to "Place within a 100-year flood hazard area structures which would impede or redirect flows" is yes.

***Response:*** The text was revised for clarity.

# TABLE OF CONTENTS

1. INTRODUCTION ..... 1

2. PROJECT DESCRIPTION ..... 3

3. EXISTING AND PROPOSED DRAINAGE PATTERNS AND IMPROVEMENTS ..... 4

3.1 Existing Onsite Drainage Patterns ..... 4

3.2 Existing Offsite Drainage Patterns ..... 4

3.3 Proposed Drainage Improvements ..... 5

4. HYDROLOGY CRITERIA, METHODOLOGY, AND RESULTS ..... 6

4.1 Hydrology Criteria ..... 6

4.2 Hydrologic Methodology ..... 7

4.3 Description of Hydrologic Modeling Software ..... 8

4.4 Hydrology Results ..... 9

5. HYDRAULIC CRITERIA, METHODOLOGY, AND RESULTS ..... 12

6. ENVIRONMENTAL IMPACTS ..... 14

7. CONCLUSION ..... 16

## FIGURES

Figure 1: Project Vicinity Map ..... 2

## TABLES

Table 1: Hydrology Criteria ..... 7

Table 2: Hydrology Results for Overall Drainage Area #1 (Includes all Northerly Outfalls to Buena Vista Creek) ..... 9

Table 3: Hydrology Results for Overall Drainage Area #2 (Includes all Southerly Outfalls to Buena Vista Creek) ..... 11

Table 4: Hydrology Results for Overall Drainage Area #3 (Outfall to Westerly Finger Canyon) 11

## APPENDICES

1 Supporting Documentation (Isopluvial Maps, Runoff Coefficients, FEMA FIRM Panel)

2 Existing Conditions Rational Method Computer Output

3 Proposed Conditions Rational Method Computer Output

4 Preliminary Energy Dissipation Calculations

5 Drainage Exhibits

A-1, A-2, A-3 – Existing Conditions Hydrology Maps

B – Proposed Conditions Hydrology Map

# 1. INTRODUCTION

This preliminary drainage report supports the entitlement package submittal for the proposed Quarry Creek project. Generally speaking, the project is located to the southwest of the intersection of Highway 78 and College Boulevard. Specifically, the project is bound by Haymar Drive to the north, open space to the west, residential uses as a part of the Calavera Hills community to the south, and adjacent commercial property within the City of Oceanside to the east. The property is bisected by Buena Vista Creek, which enters the eastern portion of the site at El Salto Falls, then flows in a westerly direction through the middle of the site. The site historically contained a quarry and associated operations and was operated by Hanson Aggregates Pacific Southwest, Inc. (Hanson). The City of Carlsbad recently approved the reclamation of the site per the South Coast Materials Quarry Project per Drawing 470-5A (SUP 07-03, SWMP 11-03). The reclamation project included the regrading of the site to a usable condition compatible with future land uses. The reclamation work also included enlargement of the creek channel to accommodate the 100-year flow and the construction of a series of drop structures in order to flatten the longitudinal creek slope to minimize and control erosive flow velocities. The approved Drainage Study for the South Coast Materials Quarry Project was prepared by Chang Consultants and is dated May 26, 2011. Since the post-reclamation project conditions are the pre-project conditions for the proposed Quarry Creek project, the Chang report was used as a reference in developing the hydrologic models prepared for this report.

The total project site consists of 155.36 acres of gross project area plus additional area of grading for offsite improvements. The proposed graded disturbance area for the project is approximately 73.5 acres. Figure 1 shows the vicinity map for the project.

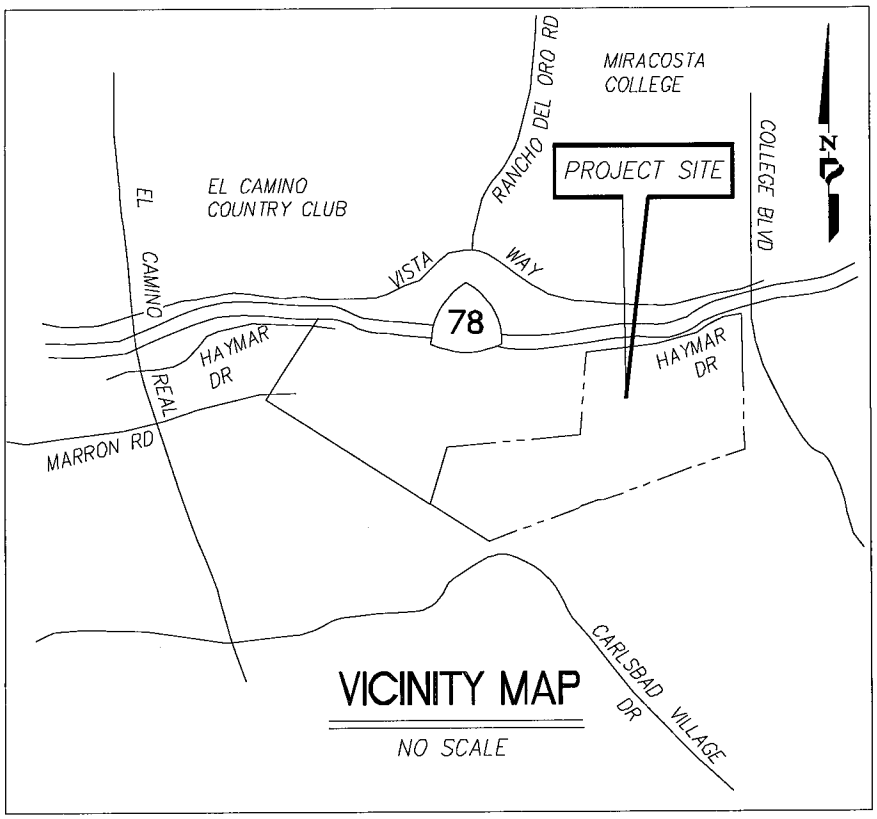


***Figure 1: Project Vicinity Map***

The purpose of this report is to determine hydrologic impact, if any, to the existing City of Carlsbad storm drain facilities or natural drainage, and provide peak 100-year discharge values for existing and proposed conditions. In addition, this report is also intended to analyze project impacts with respect to CEQA guidelines. *Therefore, the purpose of this report submittal is to acquire from the City: 1) concept approval of the proposed storm drain layout, 2) approval of the methodology used in the evaluation of the Project storm drain system hydrology, and 3) identification of critical path drainage issues that need to be addressed during final engineering.*

The drainage analyses presented herein reflect an entitlement level-of-effort, which include peak 100-year storm event hydrologic analyses using relative street and lot grades. The scope of the drainage analysis included in this report is limited to onsite areas and the associated offsite runon areas. Hydraulic analyses for detention, inlets, pipe inverts and HGL's will be provided during final engineering. For the drainage analysis of the Buena Vista Creek channel, refer to the May

26, 2011 South Coast Materials Quarry Project Drainage Study prepared by Chang Consultants. The proposed project does not include modifications to the channel, but does include a proposed bridge that spans the channel. Chang Consultants is concurrently processing an update to the original floodplain analysis to show the addition of the proposed bridge. This revision to the floodplain analysis will be documented as a supplemental floodplain report by Chang Consultants.

The Project will meet State NPDES construction and municipal stormwater permit requirements. The project proposes several extended detention basins to comply with stormwater quality and hydromodification requirements. For a detailed discussion of the project's stormwater quality BMPs and hydromodification management approach, refer to the Preliminary Stormwater Management Plan prepared by Rick Engineering. For the Southern California Coastal Water Research Project (SCCWRP) channel screening report for the project, refer to the SCCWRP report prepared by Chang Consultants and submitted under a separate cover. The SCCWRP report documents the channel erosivity analysis, which was used to document the low flow threshold to be used for design of the proposed hydromodification management facilities. The final post-construction BMP design will be provided during final engineering.

## 2. PROJECT DESCRIPTION

The Quarry Creek land use plan provides a land use distribution that reflects a balance of open space, residential, and public use land uses. The developable pads will include medium-high to high residential uses (Lots 1 through 5). Additional proposed lots include a community facility site near the southeast corner of the site (Lot 7), a park-and-ride facility adjacent to Haymar Drive near the northerly site perimeter (Lot 6), and multiple park and trail facilities. In addition, the project proposes to preserve a significant amount of open space area. A new bridge will be constructed across the Buena Vista Creek channel connecting the northerly pads to the southerly pads.

## 3. EXISTING AND PROPOSED DRAINAGE PATTERNS AND IMPROVEMENTS

The following sections provide descriptions of the existing and proposed drainage patterns and improvements for the Project.

### 3.1 Existing Onsite Drainage Patterns

Existing onsite drainage areas include areas that are part of the reclamation plan and other areas farther to the west of the reclamation site that are currently undeveloped. For the areas that are not a part of the reclamation plan, existing drainage patterns are dictated by steep slopes and heavily vegetated natural channels and natural drainage conveyances.

The Hanson Quarry reclamation plan per Drawing 470-5A is currently under construction. The post-reclamation condition was analyzed as the pre-project conditions for the Quarry Creek project. The overall existing condition drainage area was set equal to the overall proposed drainage area in order to provide a basis for comparison. Because of this, there are minor differences between Chang's post-project hydrology models and this project's pre-project hydrology models.

Under existing conditions, runoff from the onsite reclaimed area generally sheet flows towards the creek. Swales and ditches collect the runoff and direct the overland flow into various temporary desilting basins. There are two basins on the north side of the creek and one basin on the south side of the creek per Drawing 470-5A. The runoff collected in each basin is collected in a large-diameter culvert that outlets into the creek within the riprap drop structures. Each of the culverts and their respective energy dissipation outfalls were designed to accommodate ultimate condition land uses and flow rates per Chang's reclamation drainage report.

### 3.2 Existing Offsite Drainage Patterns

The pre-project drainage patterns include a significant amount of offsite runon from areas both to the north and to the south of the project site. The offsite drainage area to the north includes area within the City of Oceanside. This drainage area collects in a storm drain system that drains

underneath Highway 78 and connects into an onsite storm drain pipe (Line 1 per Drawing 470-5A) that runs north to south through the site but does not commingle with onsite runoff. The pipe discharges to Buena Vista Creek via an outfall separate from the other onsite storm drain systems.

The southerly offsite runon drainage areas include runoff from the steep hillsides to the south and southeast of the proposed building pads. The hillside runoff is collected in a vast system of brow ditches with multiple outlet points. Portions of the residential development located to the south of the project contribute runon onto the site.

There are two main tributary channels within the site that are located to the west of the reclamation area. The drainage channel immediately to the west of the reclamation project runs south to north and confluences with the Buena Vista Creek channel within the project site limits. The other drainage channel conveys a significant amount of offsite drainage in a northwesterly direction through the site and eventually this channel confluences with Buena Vista Creek approximately 1300 feet beyond the project site boundary.

The runoff from the recently constructed commercial development (Quarry Creek Shopping Center) within the City of Oceanside immediately to the east of the project discharges into an onsite storm drain pipe that runs in a northwesterly direction through the site but does not commingle with onsite water (Line 2 per Drawing 470-5A). Note that the drainage area to the pipe is not delineated in this report or in Chang's reclamation drainage report, but the 100-year flow rate from this outfall was obtained from O'Day Consultants. Refer to Exhibits A-1, A-2, and A-3 for the existing conditions hydrology map for onsite and offsite drainage areas.

### 3.3 Proposed Drainage Improvements

The proposed drainage patterns and drainage improvements have been designed to mimic existing drainage patterns and to utilize the storm drain outfalls built per Drawing 470-5A. In addition, three additional storm drain outfalls (Lines A, B and C) will be constructed with this project. The proposed project will include a storm drain system consisting of inlets, pipes, roof drains, and water quality features. The project proposes to construct a public backbone storm drain system to accommodate the drainage from the streets and the proposed lots. The backbone

storm drain system will provide storm drain stubs to serve the proposed developable lots. The storm drain within the streets will be public but the storm drain pipes within the creek and within the private lots will be private.

In order to minimize the amount of offsite area commingling with onsite runoff, a separate storm drain pipe for offsite runoff was required for some areas of the site plan. This was done for reasons related to hydromodification management and water quality treatment. Extended detention basins are located near the outlet points where needed in order to satisfy hydromodification management and water quality treatment for onsite flows. The proposed site plan proposes a total of six basins. The proposed basins are located downstream of the proposed development. Each basin was designed to accommodate an emergency overland release. Therefore, if for any reason the outlet structure of a basin becomes clogged, the excess water would flow across open space areas and would not inundate any of the developed areas. The width of flow out of the basin in an emergency situation would be large enough to keep velocities low in order to protect open space areas from excess erosion due to the emergency overland release. Under normal operating conditions, the basin outlet structures will be able to collect the 100-year peak flow rates into the basin riser and discharge pipe and no runoff would spill via overland flow out of the basin. Refer to Exhibit B for the proposed conditions hydrology map.

## 4. HYDROLOGY CRITERIA, METHODOLOGY, AND RESULTS

This section of the report summarizes the drainage criteria that were used in the hydrologic analysis and key elements of the methodology. Also included is a description of the computer model used in the computations.

### 4.1 Hydrology Criteria

The drainage basins were delineated using available topography and the preliminary proposed grading layout for the project. Table 1 summarizes the key hydrology assumptions and criteria used for the hydrologic modeling. The runoff coefficient for each sub-area in the model was determined by estimating the percent imperviousness of the sub-area and selecting a corresponding runoff coefficient per Table 3-1 of the County of San Diego Hydrology Manual.

Since detailed site plans are not available yet for the developable pads, a conservative estimate for the imperviousness ratio was used in the model. Note that the NRCS soil maps indicate a variety of soil types through the project site, but Hydrologic Soil Group D was used for the analysis for all areas in order to be conservative and to also remain consistent with Chang's previous drainage study.

***Table 1: Hydrology Criteria***

| | |
|---|---|
| Existing and Proposed Hydrology: | 100-year storm frequency. The 100-year, 6- and 24-hour precipitation values are 2.9 and 5.1 inches, respectively. |
| Soil Type: | Hydrologic Soil Group D |
| Land Use / Runoff Coefficients: | Based on criteria presented in the 2003 County of San Diego Hydrology Manual. |
| Rainfall intensity: | Based on intensity duration frequency relationships presented in the 2003 County of San Diego Hydrology Manual. |

## 4.2 Hydrologic Methodology

The Modified Rational Method was used to determine the 100-year peak discharge flows for the design of the storm drain improvements. The existing topography and the proposed preliminary grading plan were used to delineate the individual drainage areas for each System. The project drainage areas were split into seven systems representing different outfall areas of concern. For the proposed condition, System 100 represents the offsite area conveyed through the project in the separate storm drain within Lots 1 and 2. System 200 generally includes the drainage from Street C, a portion of Haymar Drive, Lot 1, a portion of Lot 2, the future City of Oceanside park area, and the surrounding slopes. System 300 generally includes the drainage from a portion of Haymar Drive, Lot 2, and a portion of Street B (including the bridge runoff). System 400 includes a large portion of the southerly offsite runon plus the pad runoff from Lots 3 and 7. System 500 includes the drainage area draining to the new storm drain outfalls (Line B and Line C) to be constructed to the finger canyon to the south of Lot 5. The drainage area for System 500 includes Lot 5, Lot 10, and a portion of Lot 4. System 600 includes the offsite runon to the

site from the south. This drainage will be piped through the site to discharge to a new outfall to be constructed in the Buena Vista Creek channel. System 700 generally includes the drainage from Street A, Lots 8 and 9, and most of Lot 4. System 600 and 700 both discharge into proposed storm drain Line A.

The goal of the Project hydrology analysis was to:

- Determine existing and design peak 100-year flows for the sizing of the onsite storm drain system gutters, curb inlets, catch basins and underground storm drain system that convey flow to the discharge locations. From an analytical perspective, the Project hydrology was prepared using relative lot and street grades.

- Verify that the Project does not adversely impact the existing City storm drain improvements or natural drainage. A comparative analysis was performed between the existing peak 100-year discharge and project peak 100-year discharge at various locations.

- Verify that the proposed basins will contain sufficient volume for the hydromodification and water quality requirements.

### 4.3 Description of Hydrologic Modeling Software

The Modified Rational Method was used to determine the 100-year storm flow for the design of the storm system. The Civil Design Software (CivilD) Rational Method Program was used to perform the hydrologic calculations. This section provides a brief explanation of the computational procedure used in the computer model.

The CivilD Modified Rational Method Hydrology Program is a computer-aided design program where the user develops a node link model of the watershed. Developing independent node link models for each interior watershed and linking these sub-models together at confluence points creates the node link model. The intensity-duration-frequency relationships are applied to each of the drainage areas in the model to get the peak flow rates at each point of interest.

## 4.4 Hydrology Results

The results of the Rational Method hydrology modeling is provided in Appendices 2 and 3 and the results are summarized in this section. The results will be discussed in terms of three overall discharge areas. The first overall discharge area represents the combined northerly discharges to the Buena Vista Creek channel, the second represents the combined southerly discharges to the Buena Vista Creek channel, and the third represents the combined discharges to the westerly finger canyon located to the south of Lot 5. The grading of the proposed project was designed to mimic existing condition drainage areas for each overall drainage area in order to minimize diversions of area from one area to another. The results for each area are discussed separately below.

Table 2 summarizes the hydrology results for the project outfalls for the first overall drainage area for existing and proposed conditions and compares them to the ultimate condition design flows per Chang's reclamation drainage report.

***Table 2: Hydrology Results for Overall Drainage Area #1 (Includes all Northerly Outfalls to Buena Vista Creek)***

| OUTFALL | EXISTING CONDITIONS | | | PROPOSED CONDITIONS | | | PREVIOUS AS-BUILT DESIGN (ULTIMATE CONDITION ASSUMED IN RECLAMATION REPORT) | | |
|---|---|---|---|---|---|---|---|---|---|
| *Storm Drain Name* | *Name of System* | *$Q_{100}$ (cfs)* | *Contrib. Area (acres)* | *Name of System* | *$Q_{100}$ (cfs)* | *Contrib. Area (acres)* | *Name of System* | *Ultimate $Q_{100}$ (cfs)* | *Contrib. Area (acres)* |
| *SD Line 1 per DWG 470-5A* | *Portion of System 100, 200, 300* | 209.9 | 71.4 | *System 100* | 210.0 | 71.4 | *System 100* | 216.2 | 72.4 |
| *SD Line 4 per DWG 470-5A* | *Portion of System 100, 200, 300* | 36.4 | 16.5 | *System 200* | 42.8 | 14.3 | *System 200* | 82.8 | 16.2 |
| *SD Line 3 per DWG 470-5A* | *Portion of System 100, 200, 300* | 17.1 | 10.7 | *System 300* | 58.9 | 12.9 | *System 300* | 32.5 | 8.2 |
| | (Confluence) Sum= | **257.5** | **98.6** | Sum= | **311.7** | **98.7** | Sum= | **331.6** | **96.7** |

Note that peak flows increase over existing conditions, but the combined post-project flows are less than the ultimate condition design flows per Chang's reclamation drainage report of 331.6 cfs. The 100-year post-project flow rates for Lines 1 and 4 (per Drawing 470-5A) are less than

the ultimate condition design flow assumed in Chang's reclamation drainage study. Therefore, there is no capacity concern or velocity dissipation concern with these outlets, due to the fact that the post-project condition will discharge less flow to the outlets than the design flow rate per the previous reclamation project. However, for Line 3, the post-project flow is greater than the as-built design flow rate. This is due to an increase in drainage area to the outfall compared with the condition assumed in the reclamation study. For this outfall, additional hydraulic calculations are provided in this report to show that the pipe conveyance capacity and the energy dissipation of the outfall (as installed) will not be exceeded in the post-project condition. Refer to the discussion in Section 5 of this report.

Each of the outfalls can accommodate the post-project 100-year flow rates, since the outfalls were designed to accommodate ultimate condition flow rates and each of the culverts at the channel outlets were sized large enough for maximum flexibility for future development. In addition, the channel widening and drop structures per Drawing 470-5A were designed for an ultimate condition design flow rate within the creek of 10,800 cfs. Therefore, no detention for 100-year flows is warranted for the Overall Drainage Area #1. Extended detention basins are provided for Systems 200 and 300 for water quality and hydromodification management purposes. These basins will treat the runoff from the onsite areas and further protect downstream water bodies.

Table 3 summarizes the hydrology results for the project outfalls for the Overall Drainage Area #2 for existing and proposed conditions and compares them to the ultimate condition design flows per Chang's reclamation drainage report. The second overall drainage area consists of Systems 400, 600, and 700. Note that Storm Drain Line 2 per Drawing 470-5A also discharges to the southerly side of the creek. Since no changes are proposed to the pipe's tributary drainage area for the project, this pipe is not included in the comparison, however, the flow rate per the previous O'Day report for the adjacent shopping center is included in Table 3 for reference.

***Table 3: Hydrology Results for Overall Drainage Area #2 (Includes all Southerly Outfalls to Buena Vista Creek)***

| OUTFALL | EXISTING CONDITIONS | | | PROPOSED CONDITIONS | | | PREVIOUS AS-BUILT DESIGN (ULTIMATE CONDITION ASSUMED IN RECLAMATION REPORT) | | |
|---|---|---|---|---|---|---|---|---|---|
| *Storm Drain Name* | *Name of System* | *$Q_{100}$ (cfs)* | *Contrib. Area (acres)* | *Name of System* | *$Q_{100}$ (cfs)* | *Contrib. Area (acres)* | *Name of System* | *Ultimate $Q_{100}$ (cfs)* | *Contrib. Area (acres)* |
| *SD Line 5 per DWG 470-5A* | *System 400* | 84.7 | 55.2 | *System 400* | 79.6 | 39.2 | *System 400* | 117.4 | 56.8 |
| *New Line A* | *System 600* | 199.2 | 90.9 | *System 600* | 207.4 | 80.8 | N/A | N/A | N/A |
| *New Line A* | - | - | - | *System 700* | 90.2 | 26.6 | N/A | N/A | N/A |
| *Total =* | Sum= | **283.9** | **146.1** | Sum= | **377.2** | **146.6** | - | - | - |
| *Other:* | | | | | | | | | |
| *SD Line 2 per DWG 470-5A* | N/A | 160.0 | - | N/A | 160.0 | - | N/A | 160.0 | - |

Under proposed conditions, System 400 will connect into a 60-inch RCP per Drawing 470-5A and Systems 600 and 700 will drain to a new proposed creek outfall. The post-project flow rate to the System 400 outfall (Line 5 per Drawing 470-5A) decreases over existing conditions and is also less than the as-built design flow rate. Although the overall peak flow to Overall Drainage Area #2 increases over existing conditions, detention for 100-year flows is not warranted. Since the drop structures and channel widening were designed based on an ultimate condition design flow rate within the creek, a minor increase in flows to the storm drain outlets from the proposed project will not affect the capacity of the downstream channel. The increase does not have an adverse impact to existing structures. Multiple extended detention basins for water quality treatment and hydromodification management are provided for treatment of the onsite areas.

Table 4 summarizes the hydrology results for the project outfalls for Overall Drainage Area #3 for existing and proposed conditions. For Overall Drainage Area #3, there is no comparison to the reclamation drainage report because a new outfall is proposed instead of connecting to an existing outfall built per the reclamation project.

***Table 4: Hydrology Results for Overall Drainage Area #3 (Outfall to Westerly Finger Canyon)***

| EXISTING CONDITIONS | | | PROPOSED CONDITIONS | | |
|---|---|---|---|---|---|
| *Name of System* | *$Q_{100}$ (cfs)* | *Contrib. Area (acres)* | *Name of System* | *$Q_{100}$ (cfs)* | *Contrib. Area (acres)* |
| *System 500* | 25.7 | 13.9 | *System 500* | 53.5 | 13.5 |

The proposed grading design for Overall Drainage Area #3 preserved the existing drainage area to the finger canyon. Although peak flow rates increase over existing conditions, detention for 100-year flows is unwarranted, as the conveyance capacity of the finger canyon is not constrained. The likelihood for erosion and other water quality impairments will be controlled through the proposed extended detention basin.

## 5. HYDRAULIC CRITERIA, METHODOLOGY, AND RESULTS

Hydraulic calculations will be performed during final engineering. The preliminary design for each basin includes additional depth for freeboard. All of the basins are set much higher than the water surface elevation of the downstream creek, so there is no concern of high backwater effects. The building pads are set much higher than the maximum water surface elevation of the creek, so the pads are protected from flood flows. For the specifics of the creek floodplain analysis, refer to the supplemental floodplain report by Chang Consultants. The results from the flood study indicate that the bridge will cause a small increase in 100-year water surface elevations. The maximum rise in the 100-year water surface elevations between these locations due to the bridge is 0.2 feet. Since the channel has several feet of freeboard, this small rise is acceptable.

Although detailed hydraulic calculations will be performed during final engineering, preliminary energy dissipation calculations at the project outfalls have been completed to show that the outlets provide adequate energy dissipation for the post-project flows. Refer to the calculations provided in Appendix 4. For the five outfalls built per Drawing 470-5A, the existing riprap pads include grouted ½ ton riprap for the initial riprap pad length and ungrouted ½ ton riprap within the last five feet. The summary below explains the results for each outfall.

- Line 1 per Drawing 470-5A: A hydraulic model of the outfall (including the transition to the riprap pad) is included in Appendix 4. Since the proposed condition flow is less than the as-built design flow, there are no project impacts with regards to increased velocities or quantities of flows.
- Line 2 per Drawing 470-5A: The project will not change the tributary area to this outfall. Therefore, the outfall condition in the post-project condition is the same as the as-built

condition. A copy of the WSPG model from the reclamation report is included in Appendix 4.

- Line 3 per Drawing 470-5A: Since the proposed condition flow is greater than the as-built design flow, two models were created to model both the as-built flow rate and the post-project flow rate. With the proposed increase in flow, the capacity of the pipe is still adequate to convey the flow, and the existing riprap pad is adequate to dissipate the energy to non-erosive velocities through the length of the riprap pad.
- Line 4 per Drawing 470-5A: A hydraulic model of the outfall (including the transition to the riprap pad) is included in Appendix 4. Since the proposed condition flow is less than the as-built design flow, there are no project impacts with regards to increased velocities or quantities of flows.
- Line 5 per Drawing 470-5A: A hydraulic model of the outfall (including the transition to the riprap pad) is included in Appendix 4. Since the proposed condition flow is less than the as-built design flow, there are no project impacts with regards to increased velocities or quantities of flows.
- Line A: A hydraulic model of the outfall is included in Appendix 4. An impact basin per SDRSD D-41 for energy dissipation is proposed. The energy loss through the unit is calculated according to the HEC-14 methodology. See calculations in Appendix 4. The velocity at the outlet of the box is computed and then the riprap class is sized per the velocity table on Regional Standard Drawing D-40.
- Line B: A hydraulic model of the outfall is included in Appendix 4. Since the pipe is very steep, the pipe exit velocity is greater than 20 feet per second. Therefore, an impact basin per SDRSD D-41 for energy dissipation is proposed. The energy loss through the unit is calculated according to the HEC-14 methodology. See calculations in Appendix 4. The velocity at the outlet of the box is computed and then the riprap class is sized per the velocity table on Regional Standard Drawing D-40.
- Line C: A hydraulic model of the outfall is included in Appendix 4. Since the pipe is very steep, the pipe exit velocity is greater than 20 feet per second. Therefore, an impact basin per SDRSD D-41 for energy dissipation is proposed. The energy loss through the unit is calculated according to the HEC-14 methodology. See calculations in Appendix

4. The velocity at the outlet of the box is computed and then the riprap class is sized per the velocity table on Regional Standard Drawing D-40.

## 6. ENVIRONMENTAL IMPACTS

This section summarizes the following questions for CEQA purposes for hydrology and water quality impacts.

Would the project:

1. **Violate any water quality standards or waste discharge requirements?**

   The project's runoff will not violate waste discharge requirements because it will be in conformance with the NPDES stormwater general and municipal permits.

2. **Substantially deplete groundwater supplies or interfere substantially with groundwater recharge such that there would be a net deficit in aquifer volume or a lowering of the local groundwater table level (e.g., the production rate of a pre-existing nearby wells would drop to a level which would not support existing and uses or planned uses for which permits have been granted)?**

   The project will not have a significant impact on the groundwater table because the project does not propose any wells.

3. **Substantially alter the existing drainage pattern of the site or area, including through the alteration of the course of a stream or river, in a manner which would result in substantial erosion or siltation on- or off-site?**

   The project's drainage patterns mimic the existing conditions, so no substantial impacts are expected. Project outfalls will be equipped with energy dissipation to offset the concentration of flows in order to minimize erosion. Further, hydromodification management facilities (including extended detention basins) will be provided to attempt to mimic pre-project flow duration frequency relationships, thereby reducing the probability for erosion or siltation offsite.

4. **Substantially alter the existing drainage pattern of the site or area, including through the alteration of the course of a stream or river, or substantially increase the rate or amount of surface runoff in a manner which would result in flooding on- or off-site?**

   The site grading was designed to mimic existing drainage patterns and drainage areas to the various outfalls. The project discharges to stream channels with adequate conveyance characteristics. Although project runoff does increase over existing conditions, the increases are minor compared to the flow rates in the receiving

streams and therefore the potential for flooding offsite is not expected to be a concern.

5. **Create or contribute runoff water which would exceed the capacity of existing or planned storm water drainage systems or provide substantial additional sources of polluted runoff?**

The majority of the project will discharge to storm drain conveyances that have been designed to accommodate ultimate condition flow rates. Therefore, the project will not exceed the capacity of existing storm drainage systems. The project will not create substantial sources of polluted runoff, as it will conform to state and local stormwater quality regulations.

6. **Otherwise substantially degrade water quality?**

The project will not substantially degrade water quality. Treatment control BMPs and hydromodification management facilities will be installed and maintained to protect water quality per the municipal stormwater permit. For more information on how the project complies with water quality standards, refer to the project Preliminary Storm Water Management Plan prepared by Rick Engineering.

7. **Place housing within a 100-year flood hazard area as mapped on a federal Flood Hazard Boundary or Flood Insurance Rate Map or other flood hazard delineation map?**

No. During final engineering, a CLOMR will be submitted and processed through FEMA to modify the 100-year floodplain within this area for the project based on the proposed grading and improvements from the Quarry Creek project and the reclamation project. After the project construction is complete, a LOMR will be processed and once approved, the project developable pads will free and clear of any mapped floodplain hazard areas.

8. **Place within a 100-year flood hazard area structures which would impede or redirect flood flows?**

The proposed bridge will be constructed above the Buena Vista creek channel and the proposed abutments will not significantly impede flood flows. Although the bridge piers will be within the 100-year flood hazard area, the piers will not significantly impede flows, and the slight rise in water surface elevation due to the piers is acceptable. Refer to Chang's flood study and the preliminary bridge plans prepared by TYLIN.

9. **Expose people or structures to a significant risk of loss, injury or death involving flooding, including flooding as a result of the failure of a levee or dam?**

There is an existing levee per Drawing 470-5A near Lot 1. The City will condition the project to require an agreement for a maintenance entity to perpetually maintain the condition of the levee. Aside from the existing levee, there are no other

significant proposed dams or levees within or near the project site. The onsite basins may be designed with small berms, but will be designed adequately to reduce the potential for subsurface piping.

**10. Inundation by a seiche, tsunami, or mudflow?**

No. The project is not subject to seiches, tsunamis, or mudflows.

## 7. CONCLUSION

This drainage report has been prepared in support of the preliminary design of the storm drain improvements for the entitlement package for Quarry Creek. The purpose of this report is to provide peak discharges for use in designing the private and public storm drain systems for the project and to verify that the preliminary grading and drainage plan are adequate for the proposed 100-year flows. The storm drain system will be sufficient to satisfy City criteria in the post-development condition.

# APPENDIX 1

## Supporting Documentation (Isopluvial Maps, Runoff Coefficients, FEMA FIRM Panel)

# County of San Diego Hydrology Manual

*Rainfall Isopluvials*

**100 Year Rainfall Event - 6 Hours**

isopluvial (inches)

$P_6 = 2.9''$

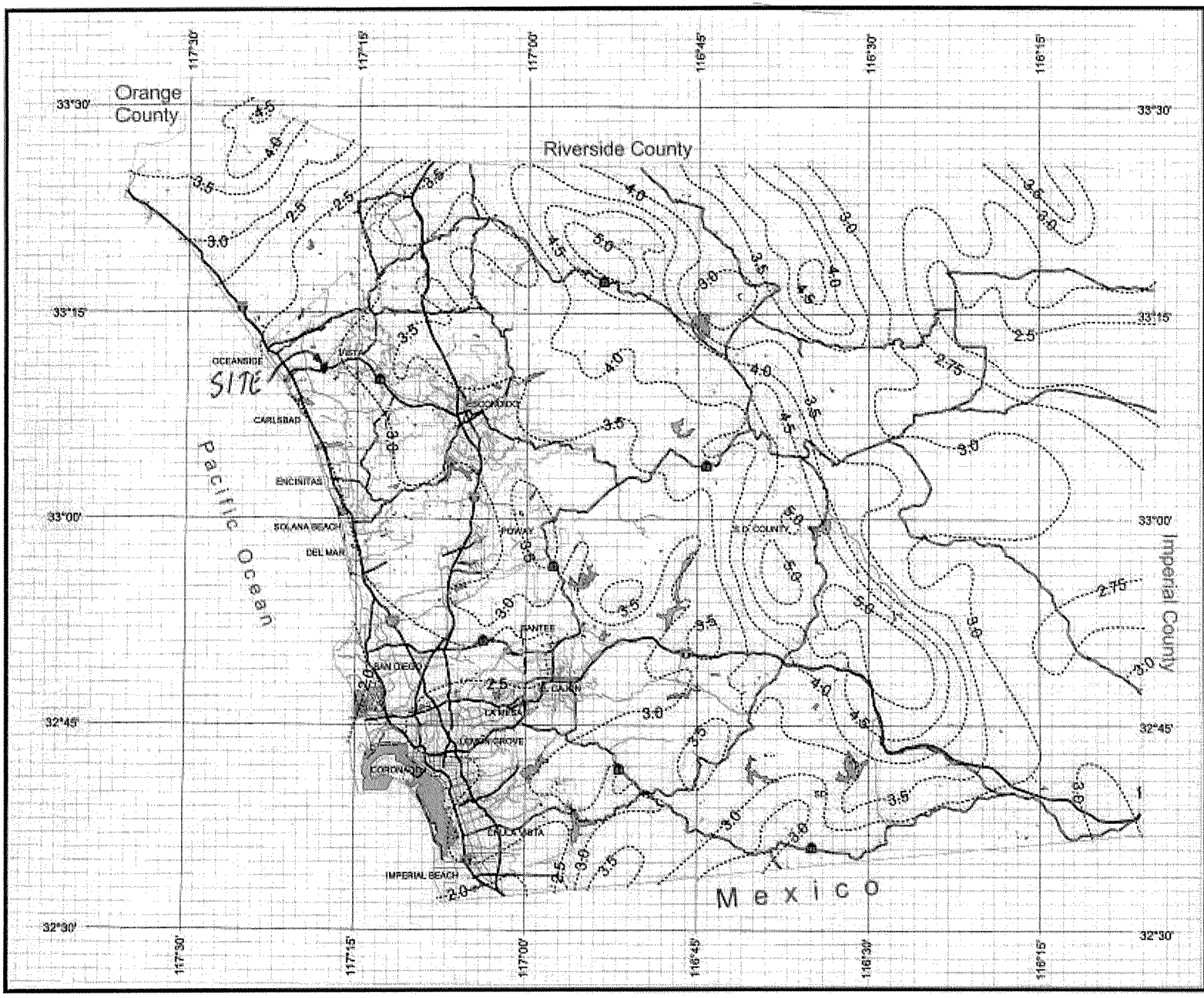


DPW GIS

SanGIS

N
W E
S

3 0 3 Miles

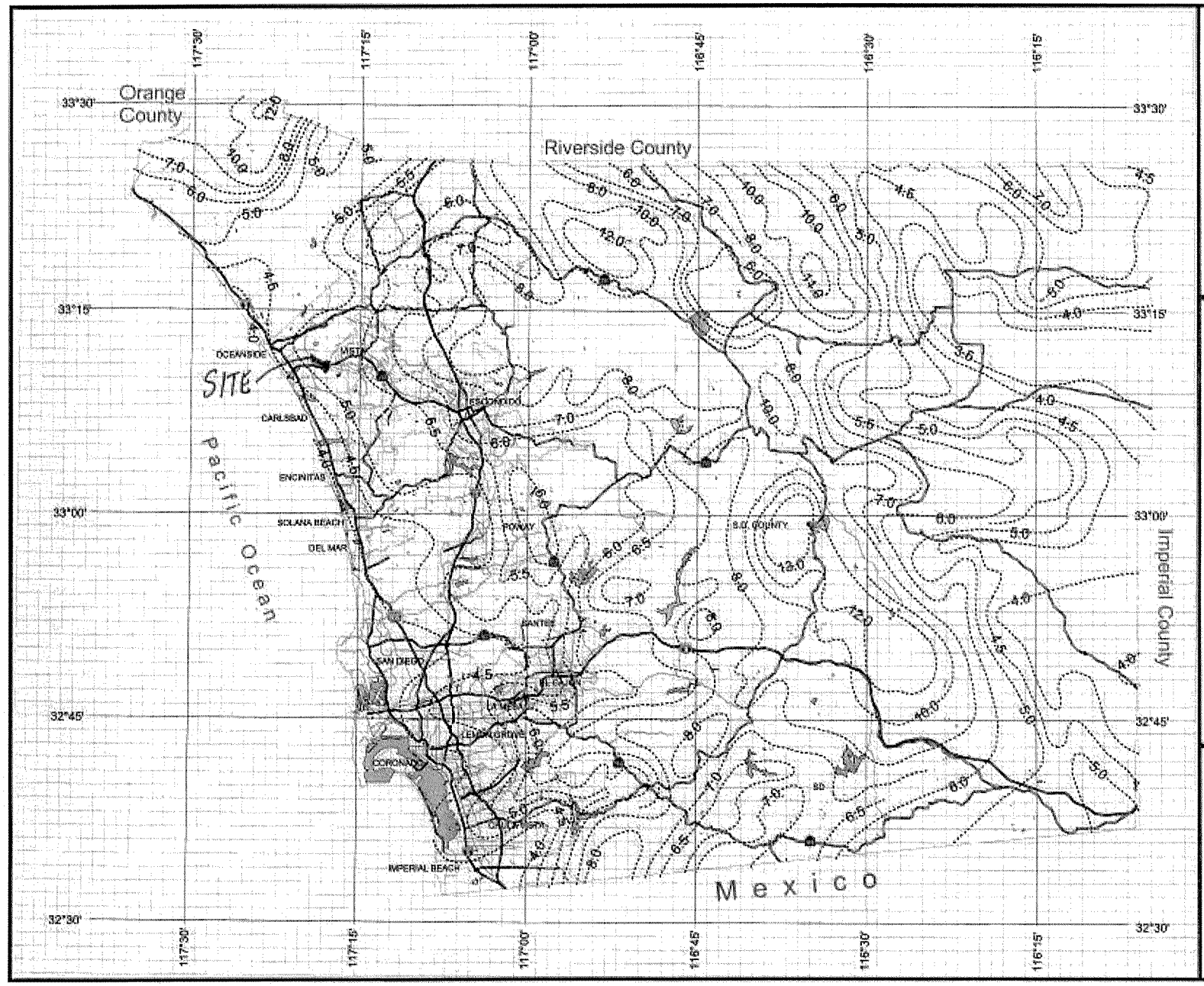


# County of San Diego Hydrology Manual

*Rainfall Isopluvials*

**100 Year Rainfall Event - 24 Hours**

Isopluvial (inches)

$P_{24} = 5.1''$

DPW GIS

SanGIS

N S E W

3 0 3 Miles

## Table 3-1
## RUNOFF COEFFICIENTS FOR URBAN AREAS

| Land Use | | Runoff Coefficient "C" | | | | |
|---|---|---|---|---|---|---|
| | | | Soil Type | | | |
| NRCS Elements | County Elements | % IMPER. | A | B | C | D |
| Undisturbed Natural Terrain (Natural) | Permanent Open Space | 0* | 0.20 | 0.25 | 0.30 | 0.35 |
| Low Density Residential (LDR) | Residential, 1.0 DU/A or less | 10 | 0.27 | 0.32 | 0.36 | 0.41 |
| Low Density Residential (LDR) | Residential, 2.0 DU/A or less | 20 | 0.34 | 0.38 | 0.42 | 0.46 |
| Low Density Residential (LDR) | Residential, 2.9 DU/A or less | 25 | 0.38 | 0.41 | 0.45 | 0.49 |
| Medium Density Residential (MDR) | Residential, 4.3 DU/A or less | 30 | 0.41 | 0.45 | 0.48 | 0.52 |
| Medium Density Residential (MDR) | Residential, 7.3 DU/A or less | 40 | 0.48 | 0.51 | 0.54 | 0.57 |
| Medium Density Residential (MDR) | Residential, 10.9 DU/A or less | 45 | 0.52 | 0.54 | 0.57 | 0.60 |
| Medium Density Residential (MDR) | Residential, 14.5 DU/A or less | 50 | 0.55 | 0.58 | 0.60 | 0.63 |
| High Density Residential (HDR) | Residential, 24.0 DU/A or less | 65 | 0.66 | 0.67 | 0.69 | 0.71 |
| High Density Residential (HDR) | Residential, 43.0 DU/A or less | 80 | 0.76 | 0.77 | 0.78 | 0.79 |
| Commercial/Industrial (N. Com) | Neighborhood Commercial | 80 | 0.76 | 0.77 | 0.78 | 0.79 |
| Commercial/Industrial (G. Com) | General Commercial | 85 | 0.80 | 0.80 | 0.81 | 0.82 |
| Commercial/Industrial (O.P. Com) | Office Professional/Commercial | 90 | 0.83 | 0.84 | 0.84 | 0.85 |
| Commercial/Industrial (Limited I.) | Limited Industrial | 90 | 0.83 | 0.84 | 0.84 | 0.85 |
| Commercial/Industrial (General I.) | General Industrial | 95 | 0.87 | 0.87 | 0.87 | 0.87 |

*The values associated with 0% impervious may be used for direct calculation of the runoff coefficient as described in Section 3.1.2 (representing the pervious runoff coefficient, Cp, for the soil type), or for areas that will remain undisturbed in perpetuity. Justification must be given that the area will remain natural forever (e.g., the area is located in Cleveland National Forest).
DU/A = dwelling units per acre
NRCS = National Resources Conservation Service

ance Program at 1-800-638-6620.

MAP SCALE 1" = 500'

0 250 500 750 1,000 FEET

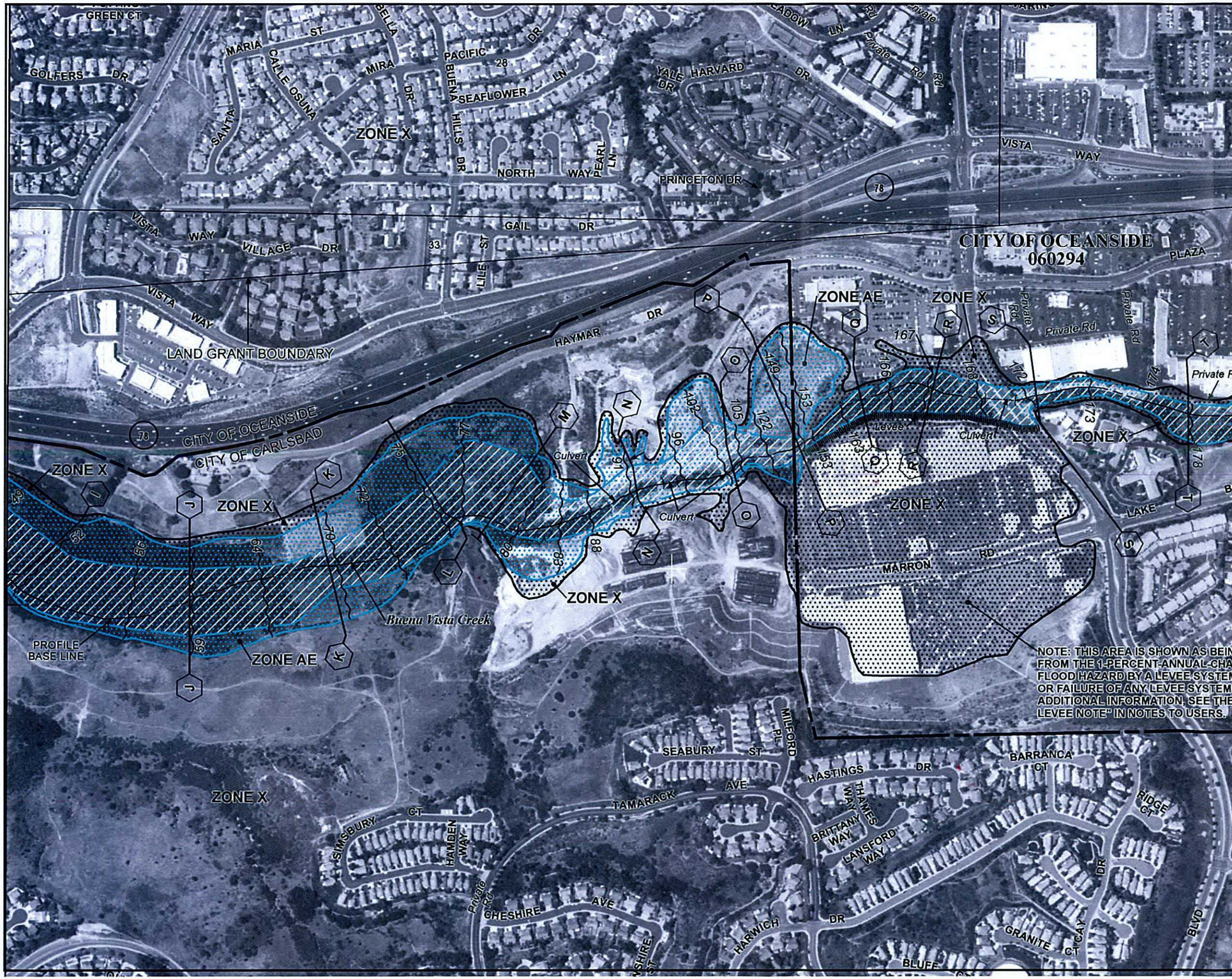


NFIP

NATIONAL FLOOD INSURANCE PROGRAM

PANEL 0766G

# FIRM

FLOOD INSURANCE RATE MAP

SAN DIEGO COUNTY, CALIFORNIA

AND INCORPORATED AREAS

PANEL 766 OF 2375

(SEE MAP INDEX FOR FIRM PANEL LAYOUT)

CONTAINS:

| COMMUNITY | NUMBER | PANEL | SUFFIX |
|---|---|---|---|
| CARLSBAD, CITY OF | 060285 | 0766 | G |
| OCEANSIDE, CITY OF | 060294 | 0766 | G |
| VISTA, CITY OF | 060297 | 0766 | G |

Notice to User: The **Map Number** shown below should be used when placing map orders; the **Community Number** shown above should be used on insurance applications for the subject community.

MAP NUMBER
06073C0766G

MAP REVISED
MAY 16, 2012

Federal Emergency Management Agency

This is an official copy of a portion of the above referenced flood map. It was extracted using F-MIT On-Line. This map does not reflect changes or amendments which may have been made subsequent to the date on the title block. For the latest product information about National Flood Insurance Program flood maps check the FEMA Flood Map Store at www.msc.fema.gov

# APPENDIX 2

## Existing Conditions Rational Method Computer Output

```
                San Diego County Rational Hydrology Program

CIVILCADD/CIVILDESIGN Engineering Software,(c)1991-2004 Version 7.4

Rational method hydrology  program based on
San Diego County Flood Control Division 2003 hydrology manual
      Rational Hydrology Study        Date: 10/02/12
----------------------------------------------------------------------
2468 QUARRY CREEK
EXISTING CONDITIONS
SYSTEM 100, 200, & 300
FILE: S123E100
----------------------------------------------------------------------
 *********   Hydrology Study Control Information **********

----------------------------------------------------------------------


Program License Serial Number 4049

----------------------------------------------------------------------
Rational hydrology study storm event year is   100.0
English (in-lb) input data Units used

Map data precipitation entered:
6 hour,  precipitation(inches) =  2.900
24 hour precipitation(inches) =  5.100
P6/P24 =    56.9%
San Diego hydrology manual 'C' values used


++++++++++++++++++++++++++++++++++++++++++++++++++++++++++++++++++++++
Process from Point/Station      100.000 to Point/Station      101.000
**** INITIAL AREA EVALUATION ****
______________________________________________________________________
Decimal fraction soil group A = 0.000
Decimal fraction soil group B = 0.000
Decimal fraction soil group C = 0.000
Decimal fraction soil group D = 1.000
[INDUSTRIAL area type                        ]
(Limited Industrial       )
Impervious value, Ai = 0.900
Sub-Area C Value = 0.850
Initial subarea total flow distance  =  100.000(Ft.)
Highest elevation =  385.700(Ft.)
Lowest elevation =  384.800(Ft.)
Elevation difference =    0.900(Ft.) Slope =  0.900 %
INITIAL AREA TIME OF CONCENTRATION CALCULATIONS:
The maximum overland flow distance is 60.00 (Ft)
for the top area slope value of   0.90 %, in a development type of
 Limited Industrial
In Accordance With Figure 3-3
Initial Area Time of Concentration =   3.61 minutes
TC = [1.8*(1.1-C)*distance(Ft.)^.5)/(% slope^(1/3)]
TC = [1.8*(1.1-0.8500)*(  60.000^.5)/(   0.900^(1/3)]=   3.61
Calculated TC of    3.610 minutes is less than 5 minutes,
 resetting TC to 5.0 minutes for rainfall intensity calculations
Rainfall intensity (I) =      7.641(In/Hr) for a   100.0 year storm
Effective runoff coefficient used for area (Q=KCIA) is C = 0.850
```

```
Subarea runoff =      1.494(CFS)
Total initial stream area =        0.230(Ac.)


++++++++++++++++++++++++++++++++++++++++++++++++++++++++++++++++++++++
Process from Point/Station      101.000 to Point/Station      101.100
**** IMPROVED CHANNEL TRAVEL TIME ****
______________________________________________________________________
Upstream point elevation =   384.800(Ft.)
Downstream point elevation =   368.000(Ft.)
Channel length thru subarea  =   107.000(Ft.)
Channel base width =   10.000(Ft.)
Slope or 'Z' of left channel bank =  10.000
Slope or 'Z' of right channel bank =  10.000
Estimated mean flow rate at midpoint of channel =      1.494(CFS)
Manning's 'N'    = 0.035
Maximum depth of channel  =    1.000(Ft.)
Flow(q) thru subarea =      1.494(CFS)
Depth of flow =   0.058(Ft.), Average velocity =   2.433(Ft/s)
Channel flow top width =   11.161(Ft.)
Flow Velocity =    2.43(Ft/s)
Travel time  =    0.73 min.
Time of concentration =    4.34 min.
Critical depth =      0.086(Ft.)
 Adding area flow to channel
Decimal fraction soil group A = 0.000
Decimal fraction soil group B = 0.000
Decimal fraction soil group C = 0.000
Decimal fraction soil group D = 1.000
[COMMERCIAL area type                        ]
(General Commercial    )
Impervious value, Ai = 0.850
Sub-Area C Value = 0.820
Rainfall intensity =      7.641(In/Hr) for a   100.0 year storm
Effective runoff coefficient used for total area
(Q=KCIA) is C = 0.850  CA =      0.196
Subarea runoff =      0.000(CFS) for      0.000(Ac.)
Total runoff =      1.494(CFS)  Total area =       0.230(Ac.)
Depth of flow =   0.058(Ft.), Average velocity =   2.433(Ft/s)
Critical depth =      0.086(Ft.)


++++++++++++++++++++++++++++++++++++++++++++++++++++++++++++++++++++++
Process from Point/Station      101.100 to Point/Station      102.000
**** STREET FLOW TRAVEL TIME + SUBAREA FLOW ADDITION ****
______________________________________________________________________
Top of street segment elevation =   368.000(Ft.)
End of street segment elevation =   340.000(Ft.)
Length of street segment  =   910.000(Ft.)
Height of curb above gutter flowline  =    6.0(In.)
Width of half street (curb to crown)  =  22.000(Ft.)
Distance from crown to crossfall grade break  =  18.000(Ft.)
Slope from gutter to grade break (v/hz) =   0.020
Slope from grade break to crown (v/hz)  =   0.020
Street flow is on [1] side(s) of the street
Distance from curb to property line  =  10.000(Ft.)
Slope from curb to property line (v/hz) =   0.020
Gutter width =   1.500(Ft.)
Gutter hike from flowline =  1.500(In.)
 Manning's N in gutter =  0.0150
```

```
 Manning's N from gutter to grade break =  0.0180
 Manning's N from grade break to crown =  0.0180
Estimated mean flow rate at midpoint of street =     21.676(CFS)
Depth of flow =   0.506(Ft.), Average velocity =   5.054(Ft/s)
Warning: depth of flow exceeds top of curb
Distance that curb overflow reaches into property =    0.28(Ft.)
Streetflow hydraulics at midpoint of street travel:
Halfstreet flow width =  20.535(Ft.)
Flow velocity =   5.05(Ft/s)
Travel time =    3.00 min.     TC =    7.34  min.
 Adding area flow to street
Decimal fraction soil group A = 0.000
Decimal fraction soil group B = 0.000
Decimal fraction soil group C = 0.000
Decimal fraction soil group D = 1.000
[COMMERCIAL area type                        ]
(General Commercial    )
Impervious value, Ai = 0.850
Sub-Area C Value = 0.820
Rainfall intensity =      5.963(In/Hr) for a   100.0 year storm
Effective runoff coefficient used for total area
(Q=KCIA) is C = 0.821  CA =      7.010
Subarea runoff =     40.302(CFS) for      8.310(Ac.)
Total runoff =     41.796(CFS)  Total area =       8.540(Ac.)
Street flow at end of street =     41.796(CFS)
Half street flow at end of street =     41.796(CFS)
Depth of flow =   0.615(Ft.), Average velocity =   5.969(Ft/s)
Warning: depth of flow exceeds top of curb
Note:  depth of flow exceeds top of street crown.
Distance that curb overflow reaches into property =    5.75(Ft.)
Flow width (from curb towards crown)=  22.000(Ft.)


++++++++++++++++++++++++++++++++++++++++++++++++++++++++++++++++++++++
Process from Point/Station      102.000 to Point/Station      103.000
**** PIPEFLOW TRAVEL TIME (Program estimated size) ****
______________________________________________________________________
Upstream point/station elevation =   340.000(Ft.)
Downstream point/station elevation =   320.000(Ft.)
Pipe length  =   345.00(Ft.)   Manning's N = 0.013
No. of pipes = 1  Required pipe flow  =    41.796(CFS)
Nearest computed pipe diameter  =     24.00(In.)
Calculated individual pipe flow  =    41.796(CFS)
Normal flow depth in pipe =   15.75(In.)
Flow top width inside pipe =   22.80(In.)
Critical depth could not be calculated.
Pipe flow velocity =     19.11(Ft/s)
Travel time through pipe =    0.30 min.
Time of concentration (TC) =     7.65 min.


++++++++++++++++++++++++++++++++++++++++++++++++++++++++++++++++++++++
Process from Point/Station      102.000 to Point/Station      103.000
**** SUBAREA FLOW ADDITION ****
______________________________________________________________________
Decimal fraction soil group A = 0.000
Decimal fraction soil group B = 0.000
Decimal fraction soil group C = 0.000
Decimal fraction soil group D = 1.000
[COMMERCIAL area type                        ]
```

```
(General Commercial     )
Impervious value, Ai = 0.850
Sub-Area C Value = 0.820
Time of concentration =     7.65 min.
Rainfall intensity =      5.810(In/Hr) for a   100.0 year storm
Effective runoff coefficient used for total area
(Q=KCIA) is C = 0.821  CA =     10.331
Subarea runoff =     18.227(CFS) for      4.050(Ac.)
Total runoff =     60.023(CFS)  Total area =      12.590(Ac.)


++++++++++++++++++++++++++++++++++++++++++++++++++++++++++++++++++++++
Process from Point/Station      103.000 to Point/Station      104.000
**** IMPROVED CHANNEL TRAVEL TIME ****
______________________________________________________________________
Upstream point elevation =   320.000(Ft.)
Downstream point elevation =   298.000(Ft.)
Channel length thru subarea  =   265.000(Ft.)
Channel base width =   10.000(Ft.)
Slope or 'Z' of left channel bank =   3.000
Slope or 'Z' of right channel bank =   3.000
Estimated mean flow rate at midpoint of channel =     62.489(CFS)
Manning's 'N'    = 0.060
Maximum depth of channel  =    1.000(Ft.)
Flow(q) thru subarea =     62.489(CFS)
Depth of flow =   0.873(Ft.), Average velocity =   5.676(Ft/s)
Channel flow top width =   15.235(Ft.)
Flow Velocity =    5.68(Ft/s)
Travel time  =    0.78 min.
Time of concentration =    8.42 min.
Critical depth =      0.969(Ft.)
 Adding area flow to channel
Decimal fraction soil group A = 0.000
Decimal fraction soil group B = 0.000
Decimal fraction soil group C = 0.000
Decimal fraction soil group D = 1.000
[UNDISTURBED NATURAL TERRAIN                    ]
(Permanent Open Space   )
Impervious value, Ai = 0.000
Sub-Area C Value = 0.350
Rainfall intensity =      5.458(In/Hr) for a   100.0 year storm
Effective runoff coefficient used for total area
(Q=KCIA) is C = 0.698  CA =     11.888
Subarea runoff =      4.863(CFS) for      4.450(Ac.)
Total runoff =     64.886(CFS)  Total area =      17.040(Ac.)
Depth of flow =   0.891(Ft.), Average velocity =   5.745(Ft/s)
Critical depth =      0.984(Ft.)


++++++++++++++++++++++++++++++++++++++++++++++++++++++++++++++++++++++
Process from Point/Station      104.000 to Point/Station      105.000
**** PIPEFLOW TRAVEL TIME (Program estimated size) ****
______________________________________________________________________
Upstream point/station elevation =   298.000(Ft.)
Downstream point/station elevation =   296.000(Ft.)
Pipe length  =    95.00(Ft.)   Manning's N = 0.013
No. of pipes = 1  Required pipe flow  =    64.886(CFS)
Nearest computed pipe diameter  =     33.00(In.)
Calculated individual pipe flow  =    64.886(CFS)
Normal flow depth in pipe =   23.27(In.)
```

```
Flow top width inside pipe =   30.09(In.)
Critical Depth =   30.55(In.)
Pipe flow velocity =     14.49(Ft/s)
Travel time through pipe =    0.11 min.
Time of concentration (TC) =     8.53 min.


++++++++++++++++++++++++++++++++++++++++++++++++++++++++++++++++++++++
Process from Point/Station      104.000 to Point/Station      105.000
**** CONFLUENCE OF MAIN STREAMS ****
______________________________________________________________________
The following data inside Main Stream is listed:
In Main Stream number: 1
Stream flow area =     17.040(Ac.)
Runoff from this stream =     64.886(CFS)
Time of concentration =    8.53 min.
Rainfall intensity =     5.413(In/Hr)
Program is now starting with Main Stream No. 2


++++++++++++++++++++++++++++++++++++++++++++++++++++++++++++++++++++++
Process from Point/Station      106.000 to Point/Station      107.000
**** INITIAL AREA EVALUATION ****
______________________________________________________________________
Decimal fraction soil group A = 0.000
Decimal fraction soil group B = 0.000
Decimal fraction soil group C = 0.000
Decimal fraction soil group D = 1.000
[MEDIUM DENSITY RESIDENTIAL                    ]
(10.9 DU/A or Less      )
Impervious value, Ai = 0.450
Sub-Area C Value = 0.600
Initial subarea total flow distance  =  130.000(Ft.)
Highest elevation =  334.000(Ft.)
Lowest elevation =  332.700(Ft.)
Elevation difference =    1.300(Ft.) Slope =  1.000 %
INITIAL AREA TIME OF CONCENTRATION CALCULATIONS:
The maximum overland flow distance is 65.00 (Ft)
for the top area slope value of   1.00 %, in a development type of
 10.9 DU/A or Less
In Accordance With Table 3-2
Initial Area Time of Concentration =   7.90 minutes
 (for slope value of   1.00 %)
Rainfall intensity (I) =      5.689(In/Hr) for a   100.0 year storm
Effective runoff coefficient used for area (Q=KCIA) is C = 0.600
Subarea runoff =      1.502(CFS)
Total initial stream area =        0.440(Ac.)


++++++++++++++++++++++++++++++++++++++++++++++++++++++++++++++++++++++
Process from Point/Station      107.000 to Point/Station      105.000
**** STREET FLOW TRAVEL TIME + SUBAREA FLOW ADDITION ****
______________________________________________________________________
Top of street segment elevation =   332.700(Ft.)
End of street segment elevation =   296.000(Ft.)
Length of street segment  =   710.000(Ft.)
Height of curb above gutter flowline  =    6.0(In.)
Width of half street (curb to crown)  =  22.000(Ft.)
Distance from crown to crossfall grade break  =  18.000(Ft.)
Slope from gutter to grade break (v/hz) =   0.020
```

```
Slope from grade break to crown (v/hz)  =   0.020
Street flow is on [1] side(s) of the street
Distance from curb to property line  =  10.000(Ft.)
Slope from curb to property line (v/hz) =   0.020
Gutter width =   1.500(Ft.)
Gutter hike from flowline =  1.500(In.)
 Manning's N in gutter =  0.0150
 Manning's N from gutter to grade break =  0.0180
 Manning's N from grade break to crown =  0.0180
Estimated mean flow rate at midpoint of street =      6.015(CFS)
Depth of flow =   0.319(Ft.), Average velocity =   4.547(Ft/s)
Streetflow hydraulics at midpoint of street travel:
Halfstreet flow width =  11.187(Ft.)
Flow velocity =   4.55(Ft/s)
Travel time =    2.60 min.     TC =   10.50  min.
 Adding area flow to street
Decimal fraction soil group A = 0.000
Decimal fraction soil group B = 0.000
Decimal fraction soil group C = 0.000
Decimal fraction soil group D = 1.000
[MEDIUM DENSITY RESIDENTIAL                  ]
(10.9 DU/A or Less      )
Impervious value, Ai = 0.450
Sub-Area C Value = 0.600
Rainfall intensity =      4.734(In/Hr) for a   100.0 year storm
Effective runoff coefficient used for total area
(Q=KCIA) is C = 0.600  CA =      2.208
Subarea runoff =      8.951(CFS) for      3.240(Ac.)
Total runoff =     10.453(CFS)  Total area =       3.680(Ac.)
Street flow at end of street =     10.453(CFS)
Half street flow at end of street =     10.453(CFS)
Depth of flow =   0.374(Ft.), Average velocity =   5.183(Ft/s)
Flow width (from curb towards crown)=  13.948(Ft.)


++++++++++++++++++++++++++++++++++++++++++++++++++++++++++++++++++++++
Process from Point/Station      107.000 to Point/Station      105.000
**** CONFLUENCE OF MAIN STREAMS ****
______________________________________________________________________
The following data inside Main Stream is listed:
In Main Stream number: 2
Stream flow area =      3.680(Ac.)
Runoff from this stream =     10.453(CFS)
Time of concentration =   10.50 min.
Rainfall intensity =     4.734(In/Hr)
Summary of stream data:

Stream   Flow rate      TC            Rainfall Intensity
 No.       (CFS)       (min)                 (In/Hr)


1       64.886      8.53          5.413
2       10.453     10.50          4.734
Qmax(1) =
         1.000 *    1.000 *    64.886) +
         1.000 *    0.812 *    10.453) + =      73.379
Qmax(2) =
         0.875 *    1.000 *    64.886) +
         1.000 *    1.000 *    10.453) + =      67.203
```

```
Total of 2 main streams to confluence:
Flow rates before confluence point:
      64.886      10.453
Maximum flow rates at confluence using above data:
       73.379       67.203
Area of streams before confluence:
       17.040        3.680


Results of confluence:
Total flow rate =      73.379(CFS)
Time of concentration =      8.533 min.
Effective stream area after confluence  =      20.720(Ac.)


++++++++++++++++++++++++++++++++++++++++++++++++++++++++++++++++++++++
Process from Point/Station      105.000 to Point/Station      108.000
**** PIPEFLOW TRAVEL TIME (Program estimated size) ****
______________________________________________________________________
Upstream point/station elevation =   296.000(Ft.)
Downstream point/station elevation =   288.000(Ft.)
Pipe length  =   240.00(Ft.)   Manning's N = 0.013
No. of pipes = 1  Required pipe flow  =    73.379(CFS)
Nearest computed pipe diameter  =     30.00(In.)
Calculated individual pipe flow  =    73.379(CFS)
Normal flow depth in pipe =   24.05(In.)
Flow top width inside pipe =   23.93(In.)
Critical depth could not be calculated.
Pipe flow velocity =     17.39(Ft/s)
Travel time through pipe =    0.23 min.
Time of concentration (TC) =     8.76 min.


++++++++++++++++++++++++++++++++++++++++++++++++++++++++++++++++++++++
Process from Point/Station      105.000 to Point/Station      108.000
**** CONFLUENCE OF MAIN STREAMS ****
______________________________________________________________________
The following data inside Main Stream is listed:
In Main Stream number: 1
Stream flow area =     20.720(Ac.)
Runoff from this stream =     73.379(CFS)
Time of concentration =    8.76 min.
Rainfall intensity =     5.321(In/Hr)
Program is now starting with Main Stream No. 2


++++++++++++++++++++++++++++++++++++++++++++++++++++++++++++++++++++++
Process from Point/Station      109.000 to Point/Station      110.000
**** INITIAL AREA EVALUATION ****
______________________________________________________________________
Decimal fraction soil group A = 0.000
Decimal fraction soil group B = 0.000
Decimal fraction soil group C = 0.000
Decimal fraction soil group D = 1.000
[MEDIUM DENSITY RESIDENTIAL                    ]
(7.3 DU/A or Less       )
Impervious value, Ai = 0.400
Sub-Area C Value = 0.570
Initial subarea total flow distance  =   70.000(Ft.)
Highest elevation =  328.700(Ft.)
```

```
Lowest elevation =  328.000(Ft.)
Elevation difference =    0.700(Ft.) Slope =  1.000 %
INITIAL AREA TIME OF CONCENTRATION CALCULATIONS:
The maximum overland flow distance is 65.00 (Ft)
for the top area slope value of   1.00 %, in a development type of
 7.3 DU/A or Less
In Accordance With Table 3-2
Initial Area Time of Concentration =   8.40 minutes
 (for slope value of   1.00 %)
Rainfall intensity (I) =      5.468(In/Hr) for a   100.0 year storm
Effective runoff coefficient used for area (Q=KCIA) is C = 0.570
Subarea runoff =      0.530(CFS)
Total initial stream area =        0.170(Ac.)


++++++++++++++++++++++++++++++++++++++++++++++++++++++++++++++++++++++
Process from Point/Station      110.000 to Point/Station      108.000
**** STREET FLOW TRAVEL TIME + SUBAREA FLOW ADDITION ****
______________________________________________________________________
Top of street segment elevation =   328.000(Ft.)
End of street segment elevation =   288.000(Ft.)
Length of street segment  =  1110.000(Ft.)
Height of curb above gutter flowline  =    6.0(In.)
Width of half street (curb to crown)  =  22.000(Ft.)
Distance from crown to crossfall grade break  =  18.000(Ft.)
Slope from gutter to grade break (v/hz) =   0.020
Slope from grade break to crown (v/hz)  =   0.020
Street flow is on [1] side(s) of the street
Distance from curb to property line  =  10.000(Ft.)
Slope from curb to property line (v/hz) =   0.020
Gutter width =   1.500(Ft.)
Gutter hike from flowline =  1.500(In.)
 Manning's N in gutter =  0.0150
 Manning's N from gutter to grade break =  0.0180
 Manning's N from grade break to crown =  0.0180
Estimated mean flow rate at midpoint of street =      6.419(CFS)
Depth of flow =   0.342(Ft.), Average velocity =   4.023(Ft/s)
Streetflow hydraulics at midpoint of street travel:
Halfstreet flow width =  12.347(Ft.)
Flow velocity =   4.02(Ft/s)
Travel time =    4.60 min.     TC =   13.00  min.
 Adding area flow to street
Decimal fraction soil group A = 0.000
Decimal fraction soil group B = 0.000
Decimal fraction soil group C = 0.000
Decimal fraction soil group D = 1.000
[MEDIUM DENSITY RESIDENTIAL                  ]
(7.3 DU/A or Less       )
Impervious value, Ai = 0.400
Sub-Area C Value = 0.570
Rainfall intensity =      4.126(In/Hr) for a   100.0 year storm
Effective runoff coefficient used for total area
(Q=KCIA) is C = 0.570  CA =      2.964
Subarea runoff =     11.699(CFS) for      5.030(Ac.)
Total runoff =     12.229(CFS)  Total area =       5.200(Ac.)
Street flow at end of street =     12.229(CFS)
Half street flow at end of street =     12.229(CFS)
Depth of flow =   0.413(Ft.), Average velocity =   4.693(Ft/s)
Flow width (from curb towards crown)=  15.920(Ft.)
```

```
++++++++++++++++++++++++++++++++++++++++++++++++++++++++++++++++++++++
Process from Point/Station      110.000 to Point/Station      108.000
**** CONFLUENCE OF MAIN STREAMS ****
______________________________________________________________________
The following data inside Main Stream is listed:
In Main Stream number: 2
Stream flow area =      5.200(Ac.)
Runoff from this stream =     12.229(CFS)
Time of concentration =   13.00 min.
Rainfall intensity =     4.126(In/Hr)
Summary of stream data:

Stream   Flow rate      TC            Rainfall Intensity
 No.       (CFS)       (min)                 (In/Hr)


1       73.379      8.76          5.321
2       12.229     13.00          4.126
Qmax(1) =
          1.000 *    1.000 *    73.379) +
          1.000 *    0.674 *    12.229) + =      81.622
Qmax(2) =
          0.775 *    1.000 *    73.379) +
          1.000 *    1.000 *    12.229) + =      69.126

Total of 2 main streams to confluence:
Flow rates before confluence point:
      73.379      12.229
Maximum flow rates at confluence using above data:
       81.622       69.126
Area of streams before confluence:
       20.720        5.200


Results of confluence:
Total flow rate =     81.622(CFS)
Time of concentration =     8.763 min.
Effective stream area after confluence  =     25.920(Ac.)


++++++++++++++++++++++++++++++++++++++++++++++++++++++++++++++++++++++
Process from Point/Station      108.000 to Point/Station      111.000
**** PIPEFLOW TRAVEL TIME (Program estimated size) ****
______________________________________________________________________
Upstream point/station elevation =   288.000(Ft.)
Downstream point/station elevation =   218.000(Ft.)
Pipe length  =   305.00(Ft.)   Manning's N = 0.013
No. of pipes = 1  Required pipe flow  =    81.622(CFS)
Nearest computed pipe diameter  =     24.00(In.)
Calculated individual pipe flow  =    81.622(CFS)
Normal flow depth in pipe =   15.56(In.)
Flow top width inside pipe =   22.92(In.)
Critical depth could not be calculated.
Pipe flow velocity =     37.90(Ft/s)
Travel time through pipe =    0.13 min.
Time of concentration (TC) =     8.90 min.


++++++++++++++++++++++++++++++++++++++++++++++++++++++++++++++++++++++
```

```
Process from Point/Station      111.000 to Point/Station      112.000
**** IMPROVED CHANNEL TRAVEL TIME ****
_____________________________________________________________________
Upstream point elevation =   218.000(Ft.)
Downstream point elevation =   198.000(Ft.)
Channel length thru subarea  =   635.000(Ft.)
Channel base width =    5.000(Ft.)
Slope or 'Z' of left channel bank =   2.000
Slope or 'Z' of right channel bank =   2.000
Estimated mean flow rate at midpoint of channel =     84.015(CFS)
Manning's 'N'    = 0.050
Maximum depth of channel  =    5.000(Ft.)
Flow(q) thru subarea =     84.015(CFS)
Depth of flow =   1.723(Ft.), Average velocity =   5.774(Ft/s)
Channel flow top width =   11.892(Ft.)
Flow Velocity =    5.77(Ft/s)
Travel time  =    1.83 min.
Time of concentration =   10.73 min.
Critical depth =      1.641(Ft.)
 Adding area flow to channel
Decimal fraction soil group A = 0.000
Decimal fraction soil group B = 0.000
Decimal fraction soil group C = 0.000
Decimal fraction soil group D = 1.000
[HIGH DENSITY RESIDENTIAL                    ]
(24.0 DU/A or Less      )
Impervious value, Ai = 0.650
Sub-Area C Value = 0.710
Rainfall intensity =      4.669(In/Hr) for a   100.0 year storm
Effective runoff coefficient used for total area
(Q=KCIA) is C = 0.662  CA =     18.494
Subarea runoff =      4.732(CFS) for      2.020(Ac.)
Total runoff =     86.354(CFS)  Total area =      27.940(Ac.)
Depth of flow =   1.747(Ft.), Average velocity =   5.818(Ft/s)
Critical depth =      1.672(Ft.)


++++++++++++++++++++++++++++++++++++++++++++++++++++++++++++++++++++++
Process from Point/Station      111.000 to Point/Station      112.000
**** CONFLUENCE OF MAIN STREAMS ****
_____________________________________________________________________
The following data inside Main Stream is listed:
In Main Stream number: 1
Stream flow area =     27.940(Ac.)
Runoff from this stream =     86.354(CFS)
Time of concentration =   10.73 min.
Rainfall intensity =     4.669(In/Hr)
Program is now starting with Main Stream No. 2


++++++++++++++++++++++++++++++++++++++++++++++++++++++++++++++++++++++
Process from Point/Station      113.000 to Point/Station      114.000
**** INITIAL AREA EVALUATION ****
_____________________________________________________________________
Decimal fraction soil group A = 0.000
Decimal fraction soil group B = 0.000
Decimal fraction soil group C = 0.000
Decimal fraction soil group D = 1.000
[UNDISTURBED NATURAL TERRAIN                 ]
(Permanent Open Space   )
```

```
Impervious value, Ai = 0.000
Sub-Area C Value = 0.350
Initial subarea total flow distance  =  115.000(Ft.)
Highest elevation =  337.000(Ft.)
Lowest elevation =  330.000(Ft.)
Elevation difference =    7.000(Ft.) Slope =  6.087 %
INITIAL AREA TIME OF CONCENTRATION CALCULATIONS:
The maximum overland flow distance is 100.00 (Ft)
for the top area slope value of   6.09 %, in a development type of
 Permanent Open Space
In Accordance With Table 3-2
Initial Area Time of Concentration =   8.70 minutes
 (for slope value of   5.00 %)
Rainfall intensity (I) =      5.345(In/Hr) for a   100.0 year storm
Effective runoff coefficient used for area (Q=KCIA) is C = 0.350
Subarea runoff =      0.281(CFS)
Total initial stream area =        0.150(Ac.)


++++++++++++++++++++++++++++++++++++++++++++++++++++++++++++++++++++++
Process from Point/Station      114.000 to Point/Station      115.000
**** IMPROVED CHANNEL TRAVEL TIME ****
______________________________________________________________________
Upstream point elevation =   330.000(Ft.)
Downstream point elevation =   240.000(Ft.)
Channel length thru subarea  =   420.000(Ft.)
Channel base width =   10.000(Ft.)
Slope or 'Z' of left channel bank =  10.000
Slope or 'Z' of right channel bank =  10.000
Estimated mean flow rate at midpoint of channel =      1.517(CFS)
Manning's 'N'    = 0.050
Maximum depth of channel  =    1.000(Ft.)
Flow(q) thru subarea =      1.517(CFS)
Depth of flow =   0.066(Ft.), Average velocity =   2.157(Ft/s)
Channel flow top width =   11.319(Ft.)
Flow Velocity =    2.16(Ft/s)
Travel time  =    3.25 min.
Time of concentration =   11.95 min.
Critical depth =      0.087(Ft.)
 Adding area flow to channel
Decimal fraction soil group A = 0.000
Decimal fraction soil group B = 0.000
Decimal fraction soil group C = 0.000
Decimal fraction soil group D = 1.000
[UNDISTURBED NATURAL TERRAIN                  ]
(Permanent Open Space   )
Impervious value, Ai = 0.000
Sub-Area C Value = 0.350
Rainfall intensity =      4.357(In/Hr) for a   100.0 year storm
Effective runoff coefficient used for total area
(Q=KCIA) is C = 0.350  CA =      0.612
Subarea runoff =      2.388(CFS) for      1.600(Ac.)
Total runoff =      2.669(CFS)  Total area =       1.750(Ac.)
Depth of flow =   0.092(Ft.), Average velocity =   2.656(Ft/s)
Critical depth =      0.125(Ft.)


++++++++++++++++++++++++++++++++++++++++++++++++++++++++++++++++++++++
Process from Point/Station      115.000 to Point/Station      116.000
**** STREET FLOW TRAVEL TIME + SUBAREA FLOW ADDITION ****
```

```
Top of street segment elevation =   240.000(Ft.)
End of street segment elevation =   203.000(Ft.)
Length of street segment  =   900.000(Ft.)
Height of curb above gutter flowline  =    6.0(In.)
Width of half street (curb to crown)  =  22.000(Ft.)
Distance from crown to crossfall grade break  =  18.000(Ft.)
Slope from gutter to grade break (v/hz) =   0.020
Slope from grade break to crown (v/hz)  =   0.020
Street flow is on [1] side(s) of the street
Distance from curb to property line  =  10.000(Ft.)
Slope from curb to property line (v/hz) =   0.020
Gutter width =   1.500(Ft.)
Gutter hike from flowline =  1.500(In.)
 Manning's N in gutter =  0.0150
 Manning's N from gutter to grade break =  0.0180
 Manning's N from grade break to crown =  0.0180
Estimated mean flow rate at midpoint of street =     19.672(CFS)
Depth of flow =   0.468(Ft.), Average velocity =   5.536(Ft/s)
Streetflow hydraulics at midpoint of street travel:
Halfstreet flow width =  18.661(Ft.)
Flow velocity =   5.54(Ft/s)
Travel time =    2.71 min.     TC =   14.65  min.
 Adding area flow to street
Decimal fraction soil group A = 0.000
Decimal fraction soil group B = 0.000
Decimal fraction soil group C = 0.000
Decimal fraction soil group D = 1.000
[HIGH DENSITY RESIDENTIAL                    ]
(24.0 DU/A or Less      )
Impervious value, Ai = 0.650
Sub-Area C Value = 0.710
Rainfall intensity =      3.819(In/Hr) for a   100.0 year storm
Effective runoff coefficient used for total area
(Q=KCIA) is C = 0.666  CA =      9.622
Subarea runoff =     34.077(CFS) for     12.690(Ac.)
Total runoff =     36.745(CFS)  Total area =      14.440(Ac.)
Street flow at end of street =     36.745(CFS)
Half street flow at end of street =     36.745(CFS)
Depth of flow =   0.569(Ft.), Average velocity =   6.356(Ft/s)
Warning: depth of flow exceeds top of curb
Note:  depth of flow exceeds top of street crown.
Distance that curb overflow reaches into property =    3.45(Ft.)
Flow width (from curb towards crown)=  22.000(Ft.)


++++++++++++++++++++++++++++++++++++++++++++++++++++++++++++++++++++++
Process from Point/Station      116.000 to Point/Station      112.000
**** PIPEFLOW TRAVEL TIME (Program estimated size) ****
```

```
Upstream point/station elevation =   203.000(Ft.)
Downstream point/station elevation =   198.000(Ft.)
Pipe length  =   100.00(Ft.)   Manning's N = 0.013
No. of pipes = 1  Required pipe flow  =    36.745(CFS)
Nearest computed pipe diameter  =     24.00(In.)
Calculated individual pipe flow  =    36.745(CFS)
Normal flow depth in pipe =   15.16(In.)
Flow top width inside pipe =   23.15(In.)
Critical depth could not be calculated.
Pipe flow velocity =     17.56(Ft/s)
```

```
Travel time through pipe =    0.09 min.
Time of concentration (TC) =    14.75 min.


++++++++++++++++++++++++++++++++++++++++++++++++++++++++++++++++++++++
Process from Point/Station      116.000 to Point/Station      112.000
**** CONFLUENCE OF MAIN STREAMS ****
______________________________________________________________________
The following data inside Main Stream is listed:
In Main Stream number: 2
Stream flow area =     14.440(Ac.)
Runoff from this stream =     36.745(CFS)
Time of concentration =   14.75 min.
Rainfall intensity =     3.803(In/Hr)
Summary of stream data:

Stream   Flow rate      TC            Rainfall Intensity
 No.       (CFS)       (min)                 (In/Hr)


1       86.354     10.73          4.669
2       36.745     14.75          3.803
Qmax(1) =
         1.000 *    1.000 *    86.354) +
         1.000 *    0.727 *    36.745) + =     113.084
Qmax(2) =
         0.814 *    1.000 *    86.354) +
         1.000 *    1.000 *    36.745) + =     107.077

Total of 2 main streams to confluence:
Flow rates before confluence point:
      86.354      36.745
Maximum flow rates at confluence using above data:
      113.084      107.077
Area of streams before confluence:
       27.940       14.440


Results of confluence:
Total flow rate =    113.084(CFS)
Time of concentration =    10.730 min.
Effective stream area after confluence  =     42.380(Ac.)


++++++++++++++++++++++++++++++++++++++++++++++++++++++++++++++++++++++
Process from Point/Station      112.000 to Point/Station      117.000
**** PIPEFLOW TRAVEL TIME (Program estimated size) ****
______________________________________________________________________
Upstream point/station elevation =   198.000(Ft.)
Downstream point/station elevation =   189.000(Ft.)
Pipe length  =   360.00(Ft.)   Manning's N = 0.013
No. of pipes = 1  Required pipe flow  =   113.084(CFS)
Nearest computed pipe diameter  =     39.00(In.)
Calculated individual pipe flow  =   113.084(CFS)
Normal flow depth in pipe =   28.03(In.)
Flow top width inside pipe =   35.07(In.)
Critical depth could not be calculated.
Pipe flow velocity =     17.72(Ft/s)
Travel time through pipe =    0.34 min.
Time of concentration (TC) =    11.07 min.
```

```
++++++++++++++++++++++++++++++++++++++++++++++++++++++++++++++++++++++
Process from Point/Station      112.000 to Point/Station      117.000
**** SUBAREA FLOW ADDITION ****
______________________________________________________________________
Decimal fraction soil group A = 0.000
Decimal fraction soil group B = 0.000
Decimal fraction soil group C = 0.000
Decimal fraction soil group D = 1.000
[HIGH DENSITY RESIDENTIAL                    ]
(24.0 DU/A or Less      )
Impervious value, Ai = 0.650
Sub-Area C Value = 0.710
Time of concentration =    11.07 min.
Rainfall intensity =      4.577(In/Hr) for a   100.0 year storm
Effective runoff coefficient used for total area
(Q=KCIA) is C = 0.673  CA =     36.324
Subarea runoff =     53.155(CFS) for     11.560(Ac.)
Total runoff =    166.240(CFS)  Total area =      53.940(Ac.)


++++++++++++++++++++++++++++++++++++++++++++++++++++++++++++++++++++++
Process from Point/Station      112.000 to Point/Station      117.000
**** CONFLUENCE OF MAIN STREAMS ****
______________________________________________________________________
The following data inside Main Stream is listed:
In Main Stream number: 1
Stream flow area =     53.940(Ac.)
Runoff from this stream =    166.240(CFS)
Time of concentration =   11.07 min.
Rainfall intensity =     4.577(In/Hr)
Program is now starting with Main Stream No. 2


++++++++++++++++++++++++++++++++++++++++++++++++++++++++++++++++++++++
Process from Point/Station      118.000 to Point/Station      119.000
**** INITIAL AREA EVALUATION ****
______________________________________________________________________
Decimal fraction soil group A = 0.000
Decimal fraction soil group B = 0.000
Decimal fraction soil group C = 0.000
Decimal fraction soil group D = 1.000
[MEDIUM DENSITY RESIDENTIAL                  ]
(7.3 DU/A or Less       )
Impervious value, Ai = 0.400
Sub-Area C Value = 0.570
Initial subarea total flow distance  =   80.000(Ft.)
Highest elevation =  274.600(Ft.)
Lowest elevation =  273.800(Ft.)
Elevation difference =    0.800(Ft.) Slope =  1.000 %
INITIAL AREA TIME OF CONCENTRATION CALCULATIONS:
The maximum overland flow distance is 65.00 (Ft)
for the top area slope value of   1.00 %, in a development type of
 7.3 DU/A or Less
In Accordance With Table 3-2
Initial Area Time of Concentration =   8.40 minutes
 (for slope value of   1.00 %)
Rainfall intensity (I) =      5.468(In/Hr) for a   100.0 year storm
Effective runoff coefficient used for area (Q=KCIA) is C = 0.570
```

```
Subarea runoff =      0.592(CFS)
Total initial stream area =        0.190(Ac.)


++++++++++++++++++++++++++++++++++++++++++++++++++++++++++++++++++++++
Process from Point/Station      119.000 to Point/Station      120.000
**** STREET FLOW TRAVEL TIME + SUBAREA FLOW ADDITION ****
______________________________________________________________________
Top of street segment elevation =   273.800(Ft.)
End of street segment elevation =   181.000(Ft.)
Length of street segment  =  1290.000(Ft.)
Height of curb above gutter flowline  =    6.0(In.)
Width of half street (curb to crown)  =  22.000(Ft.)
Distance from crown to crossfall grade break  =  18.000(Ft.)
Slope from gutter to grade break (v/hz) =   0.020
Slope from grade break to crown (v/hz)  =   0.020
Street flow is on [1] side(s) of the street
Distance from curb to property line  =  10.000(Ft.)
Slope from curb to property line (v/hz) =   0.020
Gutter width =   1.500(Ft.)
Gutter hike from flowline =  1.500(In.)
 Manning's N in gutter =  0.0150
 Manning's N from gutter to grade break =  0.0180
 Manning's N from grade break to crown =  0.0180
Estimated mean flow rate at midpoint of street =     19.754(CFS)
Depth of flow =   0.430(Ft.), Average velocity =   6.849(Ft/s)
Streetflow hydraulics at midpoint of street travel:
Halfstreet flow width =  16.772(Ft.)
Flow velocity =   6.85(Ft/s)
Travel time =    3.14 min.     TC =   11.54  min.
 Adding area flow to street
Decimal fraction soil group A = 0.000
Decimal fraction soil group B = 0.000
Decimal fraction soil group C = 0.000
Decimal fraction soil group D = 1.000
[MEDIUM DENSITY RESIDENTIAL                  ]
(7.3 DU/A or Less       )
Impervious value, Ai = 0.400
Sub-Area C Value = 0.570
Rainfall intensity =      4.455(In/Hr) for a   100.0 year storm
Effective runoff coefficient used for total area
(Q=KCIA) is C = 0.570  CA =      8.715
Subarea runoff =     38.237(CFS) for     15.100(Ac.)
Total runoff =     38.829(CFS)  Total area =      15.290(Ac.)
Street flow at end of street =     38.829(CFS)
Half street flow at end of street =     38.829(CFS)
Depth of flow =   0.535(Ft.), Average velocity =   7.855(Ft/s)
Warning: depth of flow exceeds top of curb
Note:  depth of flow exceeds top of street crown.
Distance that curb overflow reaches into property =    1.75(Ft.)
Flow width (from curb towards crown)=  22.000(Ft.)


++++++++++++++++++++++++++++++++++++++++++++++++++++++++++++++++++++++
Process from Point/Station      120.000 to Point/Station      117.000
**** PIPEFLOW TRAVEL TIME (Program estimated size) ****
______________________________________________________________________
Upstream point/station elevation =   181.000(Ft.)
Downstream point/station elevation =   177.900(Ft.)
Pipe length  =   310.00(Ft.)   Manning's N = 0.013
```

```
No. of pipes = 1  Required pipe flow  =    38.829(CFS)
Nearest computed pipe diameter  =     30.00(In.)
Calculated individual pipe flow  =    38.829(CFS)
Normal flow depth in pipe =   23.25(In.)
Flow top width inside pipe =   25.05(In.)
Critical Depth =   25.24(In.)
Pipe flow velocity =      9.51(Ft/s)
Travel time through pipe =    0.54 min.
Time of concentration (TC) =    12.08 min.


++++++++++++++++++++++++++++++++++++++++++++++++++++++++++++++++++++++
Process from Point/Station      120.000 to Point/Station      117.000
**** CONFLUENCE OF MAIN STREAMS ****
______________________________________________________________________
The following data inside Main Stream is listed:
In Main Stream number: 2
Stream flow area =     15.290(Ac.)
Runoff from this stream =     38.829(CFS)
Time of concentration =   12.08 min.
Rainfall intensity =     4.325(In/Hr)
Summary of stream data:

Stream   Flow rate      TC            Rainfall Intensity
 No.       (CFS)       (min)                 (In/Hr)


1      166.240     11.07          4.577
2       38.829     12.08          4.325
Qmax(1) =
         1.000 *    1.000 *   166.240) +
         1.000 *    0.916 *    38.829) + =     201.809
Qmax(2) =
         0.945 *    1.000 *   166.240) +
         1.000 *    1.000 *    38.829) + =     195.929

Total of 2 main streams to confluence:
Flow rates before confluence point:
     166.240      38.829
Maximum flow rates at confluence using above data:
      201.809      195.929
Area of streams before confluence:
       53.940       15.290


Results of confluence:
Total flow rate =    201.809(CFS)
Time of concentration =    11.068 min.
Effective stream area after confluence  =     69.230(Ac.)


++++++++++++++++++++++++++++++++++++++++++++++++++++++++++++++++++++++
Process from Point/Station      117.000 to Point/Station      121.000
**** PIPEFLOW TRAVEL TIME (Program estimated size) ****
______________________________________________________________________
Upstream point/station elevation =   177.900(Ft.)
Downstream point/station elevation =   148.000(Ft.)
Pipe length  =   345.00(Ft.)   Manning's N = 0.013
No. of pipes = 1  Required pipe flow  =   201.809(CFS)
Nearest computed pipe diameter  =     39.00(In.)
```

```
Calculated individual pipe flow  =   201.809(CFS)
Normal flow depth in pipe =   27.14(In.)
Flow top width inside pipe =   35.88(In.)
Critical depth could not be calculated.
Pipe flow velocity =     32.77(Ft/s)
Travel time through pipe =    0.18 min.
Time of concentration (TC) =    11.24 min.


++++++++++++++++++++++++++++++++++++++++++++++++++++++++++++++++++++++
Process from Point/Station      124.000 to Point/Station      121.000
**** SUBAREA FLOW ADDITION ****
______________________________________________________________________
Decimal fraction soil group A = 0.000
Decimal fraction soil group B = 0.000
Decimal fraction soil group C = 0.000
Decimal fraction soil group D = 1.000
[INDUSTRIAL area type                        ]
(General Industrial       )
Impervious value, Ai = 0.950
Sub-Area C Value = 0.870
Time of concentration =    11.24 min.
Rainfall intensity =      4.530(In/Hr) for a   100.0 year storm
Effective runoff coefficient used for total area
(Q=KCIA) is C = 0.654  CA =     45.944
Subarea runoff =      6.335(CFS) for      1.040(Ac.)
Total runoff =    208.144(CFS)  Total area =      70.270(Ac.)


++++++++++++++++++++++++++++++++++++++++++++++++++++++++++++++++++++++
Process from Point/Station      121.000 to Point/Station      121.000
**** SUBAREA FLOW ADDITION ****
______________________________________________________________________
Decimal fraction soil group A = 0.000
Decimal fraction soil group B = 0.000
Decimal fraction soil group C = 0.000
Decimal fraction soil group D = 1.000
[UNDISTURBED NATURAL TERRAIN                 ]
(Permanent Open Space   )
Impervious value, Ai = 0.000
Sub-Area C Value = 0.350
Time of concentration =    11.24 min.
Rainfall intensity =      4.530(In/Hr) for a   100.0 year storm
Effective runoff coefficient used for total area
(Q=KCIA) is C = 0.649  CA =     46.322
Subarea runoff =      1.712(CFS) for      1.080(Ac.)
Total runoff =    209.856(CFS)  Total area =      71.350(Ac.)


++++++++++++++++++++++++++++++++++++++++++++++++++++++++++++++++++++++
Process from Point/Station      121.000 to Point/Station      122.000
**** PIPEFLOW TRAVEL TIME (Program estimated size) ****
______________________________________________________________________
Upstream point/station elevation =   148.000(Ft.)
Downstream point/station elevation =   125.000(Ft.)
Pipe length  =    77.00(Ft.)   Manning's N = 0.013
No. of pipes = 1  Required pipe flow  =   209.856(CFS)
Nearest computed pipe diameter  =     30.00(In.)
Calculated individual pipe flow  =   209.856(CFS)
Normal flow depth in pipe =   23.02(In.)
```

```
Flow top width inside pipe =   25.36(In.)
Critical depth could not be calculated.
Pipe flow velocity =     51.90(Ft/s)
Travel time through pipe =    0.02 min.
Time of concentration (TC) =    11.27 min.


++++++++++++++++++++++++++++++++++++++++++++++++++++++++++++++++++++++
Process from Point/Station      122.000 to Point/Station      123.000
**** PIPEFLOW TRAVEL TIME (Program estimated size) ****
______________________________________________________________________
Upstream point/station elevation =   125.000(Ft.)
Downstream point/station elevation =    85.000(Ft.)
Pipe length  =   815.00(Ft.)   Manning's N = 0.013
No. of pipes = 1  Required pipe flow  =   209.856(CFS)
Nearest computed pipe diameter  =     42.00(In.)
Calculated individual pipe flow  =   209.856(CFS)
Normal flow depth in pipe =   32.39(In.)
Flow top width inside pipe =   35.28(In.)
Critical depth could not be calculated.
Pipe flow velocity =     26.34(Ft/s)
Travel time through pipe =    0.52 min.
Time of concentration (TC) =    11.78 min.


++++++++++++++++++++++++++++++++++++++++++++++++++++++++++++++++++++++
Process from Point/Station      122.000 to Point/Station      123.000
**** CONFLUENCE OF MAIN STREAMS ****
______________________________________________________________________
The following data inside Main Stream is listed:
In Main Stream number: 1
Stream flow area =     71.350(Ac.)
Runoff from this stream =    209.856(CFS)
Time of concentration =   11.78 min.
Rainfall intensity =     4.395(In/Hr)
Program is now starting with Main Stream No. 2


++++++++++++++++++++++++++++++++++++++++++++++++++++++++++++++++++++++
Process from Point/Station      200.000 to Point/Station      201.000
**** INITIAL AREA EVALUATION ****
______________________________________________________________________
Decimal fraction soil group A = 0.000
Decimal fraction soil group B = 0.000
Decimal fraction soil group C = 0.000
Decimal fraction soil group D = 1.000
[INDUSTRIAL area type                        ]
(General Industrial       )
Impervious value, Ai = 0.950
Sub-Area C Value = 0.870
Initial subarea total flow distance  =   62.000(Ft.)
Highest elevation =  181.200(Ft.)
Lowest elevation =  180.500(Ft.)
Elevation difference =    0.700(Ft.) Slope =  1.129 %
INITIAL AREA TIME OF CONCENTRATION CALCULATIONS:
The maximum overland flow distance is 60.00 (Ft)
for the top area slope value of   1.13 %, in a development type of
 General Industrial
In Accordance With Figure 3-3
Initial Area Time of Concentration =   3.08 minutes
```

```
TC = [1.8*(1.1-C)*distance(Ft.)^.5)/(% slope^(1/3)]
TC = [1.8*(1.1-0.8700)*(  60.000^.5)/(   1.130^(1/3)]=   3.08
The initial area total distance of   62.00 (Ft.) entered leaves a
remaining distance of    2.00 (Ft.)
Using Figure 3-4, the travel time for this distance is   0.07 minutes
for a distance of   2.00 (Ft.) and a slope of  1.13 %
with an elevation difference of   0.02(Ft.) from the end of the top area
Tt = [11.9*length(Mi)^3)/(elevation change(Ft.))]^.385 *60(min/hr)
 =    0.075 Minutes
Tt=[(11.9*0.0004^3)/(  0.02)]^.385=  0.07
Total initial area Ti =   3.08 minutes from Figure 3-3 formula plus
  0.07 minutes from the Figure 3-4 formula =   3.15 minutes
Calculated TC of    3.154 minutes is less than 5 minutes,
 resetting TC to 5.0 minutes for rainfall intensity calculations
Rainfall intensity (I) =      7.641(In/Hr) for a   100.0 year storm
Effective runoff coefficient used for area (Q=KCIA) is C = 0.870
Subarea runoff =      0.332(CFS)
Total initial stream area =        0.050(Ac.)


++++++++++++++++++++++++++++++++++++++++++++++++++++++++++++++++++++++
Process from Point/Station      201.000 to Point/Station      202.000
**** STREET FLOW TRAVEL TIME + SUBAREA FLOW ADDITION ****
______________________________________________________________________
Top of street segment elevation =   180.500(Ft.)
End of street segment elevation =   111.000(Ft.)
Length of street segment  =   921.000(Ft.)
Height of curb above gutter flowline  =    6.0(In.)
Width of half street (curb to crown)  =  22.000(Ft.)
Distance from crown to crossfall grade break  =  18.000(Ft.)
Slope from gutter to grade break (v/hz) =   0.020
Slope from grade break to crown (v/hz)  =   0.020
Street flow is on [1] side(s) of the street
Distance from curb to property line  =  10.000(Ft.)
Slope from curb to property line (v/hz) =   0.020
Gutter width =   1.500(Ft.)
Gutter hike from flowline =  1.500(In.)
 Manning's N in gutter =  0.0150
 Manning's N from gutter to grade break =  0.0180
 Manning's N from grade break to crown =  0.0180
Estimated mean flow rate at midpoint of street =      4.256(CFS)
Depth of flow =   0.274(Ft.), Average velocity =   4.856(Ft/s)
Streetflow hydraulics at midpoint of street travel:
Halfstreet flow width =   8.973(Ft.)
Flow velocity =   4.86(Ft/s)
Travel time =    3.16 min.     TC =    6.31  min.
 Adding area flow to street
Decimal fraction soil group A = 0.000
Decimal fraction soil group B = 0.000
Decimal fraction soil group C = 0.000
Decimal fraction soil group D = 1.000
[INDUSTRIAL area type                        ]
(Limited Industrial       )
Impervious value, Ai = 0.900
Sub-Area C Value = 0.850
Rainfall intensity =      6.573(In/Hr) for a   100.0 year storm
Effective runoff coefficient used for total area
(Q=KCIA) is C = 0.851  CA =      1.259
Subarea runoff =      7.943(CFS) for      1.430(Ac.)
Total runoff =      8.275(CFS)  Total area =       1.480(Ac.)
```

```
Street flow at end of street =      8.275(CFS)
Half street flow at end of street =      8.275(CFS)
Depth of flow =   0.331(Ft.), Average velocity =   5.664(Ft/s)
Flow width (from curb towards crown)=  11.788(Ft.)


++++++++++++++++++++++++++++++++++++++++++++++++++++++++++++++++++++++
Process from Point/Station      202.000 to Point/Station      203.000
**** IMPROVED CHANNEL TRAVEL TIME ****
______________________________________________________________________
Upstream point elevation =   111.000(Ft.)
Downstream point elevation =   105.500(Ft.)
Channel length thru subarea  =   336.000(Ft.)
Channel base width =   10.000(Ft.)
Slope or 'Z' of left channel bank =  50.000
Slope or 'Z' of right channel bank =  50.000
Estimated mean flow rate at midpoint of channel =     19.961(CFS)
Manning's 'N'    = 0.030
Maximum depth of channel  =    1.000(Ft.)
Flow(q) thru subarea =     19.961(CFS)
Depth of flow =   0.336(Ft.), Average velocity =   2.215(Ft/s)
Channel flow top width =   43.618(Ft.)
Flow Velocity =    2.21(Ft/s)
Travel time  =    2.53 min.
Time of concentration =    8.84 min.
Critical depth =      0.313(Ft.)
 Adding area flow to channel
Decimal fraction soil group A = 0.000
Decimal fraction soil group B = 0.000
Decimal fraction soil group C = 0.000
Decimal fraction soil group D = 1.000
[UNDISTURBED NATURAL TERRAIN                    ]
(Permanent Open Space   )
Impervious value, Ai = 0.000
Sub-Area C Value = 0.350
Rainfall intensity =      5.290(In/Hr) for a   100.0 year storm
Effective runoff coefficient used for total area
(Q=KCIA) is C = 0.400  CA =      5.970
Subarea runoff =     23.303(CFS) for     13.460(Ac.)
Total runoff =     31.578(CFS)  Total area =      14.940(Ac.)
Depth of flow =   0.413(Ft.), Average velocity =   2.493(Ft/s)
Critical depth =      0.391(Ft.)


++++++++++++++++++++++++++++++++++++++++++++++++++++++++++++++++++++++
Process from Point/Station      205.000 to Point/Station      203.000
**** SUBAREA FLOW ADDITION ****
______________________________________________________________________
Decimal fraction soil group A = 0.000
Decimal fraction soil group B = 0.000
Decimal fraction soil group C = 0.000
Decimal fraction soil group D = 1.000
[LOW DENSITY RESIDENTIAL                        ]
(1.0 DU/A or Less       )
Impervious value, Ai = 0.100
Sub-Area C Value = 0.410
Time of concentration =     8.84 min.
Rainfall intensity =      5.290(In/Hr) for a   100.0 year storm
Effective runoff coefficient used for total area
(Q=KCIA) is C = 0.400  CA =      6.401
```

```
Subarea runoff =       2.277(CFS) for       1.050(Ac.)
Total runoff =      33.856(CFS)  Total area =       15.990(Ac.)


++++++++++++++++++++++++++++++++++++++++++++++++++++++++++++++++++++++
Process from Point/Station      206.000 to Point/Station      203.000
**** SUBAREA FLOW ADDITION ****
______________________________________________________________________
Decimal fraction soil group A = 0.000
Decimal fraction soil group B = 0.000
Decimal fraction soil group C = 0.000
Decimal fraction soil group D = 1.000
[INDUSTRIAL area type                        ]
(General Industrial        )
Impervious value, Ai = 0.950
Sub-Area C Value = 0.870
Time of concentration =      8.84 min.
Rainfall intensity =      5.290(In/Hr) for a   100.0 year storm
Effective runoff coefficient used for total area
(Q=KCIA) is C = 0.416  CA =      6.879
Subarea runoff =       2.531(CFS) for       0.550(Ac.)
Total runoff =      36.387(CFS)  Total area =       16.540(Ac.)


++++++++++++++++++++++++++++++++++++++++++++++++++++++++++++++++++++++
Process from Point/Station      203.000 to Point/Station      204.000
**** PIPEFLOW TRAVEL TIME (Program estimated size) ****
______________________________________________________________________
Upstream point/station elevation =    99.600(Ft.)
Downstream point/station elevation =    86.200(Ft.)
Pipe length  =   298.00(Ft.)   Manning's N = 0.013
No. of pipes = 1  Required pipe flow  =    36.387(CFS)
Nearest computed pipe diameter  =     24.00(In.)
Calculated individual pipe flow  =    36.387(CFS)
Normal flow depth in pipe =   15.63(In.)
Flow top width inside pipe =   22.87(In.)
Critical depth could not be calculated.
Pipe flow velocity =     16.80(Ft/s)
Travel time through pipe =    0.30 min.
Time of concentration (TC) =     9.14 min.


++++++++++++++++++++++++++++++++++++++++++++++++++++++++++++++++++++++
Process from Point/Station      203.000 to Point/Station      204.000
**** CONFLUENCE OF MAIN STREAMS ****
______________________________________________________________________
The following data inside Main Stream is listed:
In Main Stream number: 2
Stream flow area =     16.540(Ac.)
Runoff from this stream =     36.387(CFS)
Time of concentration =    9.14 min.
Rainfall intensity =     5.178(In/Hr)
Program is now starting with Main Stream No. 3


++++++++++++++++++++++++++++++++++++++++++++++++++++++++++++++++++++++
Process from Point/Station      300.000 to Point/Station      301.000
**** INITIAL AREA EVALUATION ****
______________________________________________________________________
Decimal fraction soil group A = 0.000
```

```
Decimal fraction soil group B = 0.000
Decimal fraction soil group C = 0.000
Decimal fraction soil group D = 1.000
[UNDISTURBED NATURAL TERRAIN                    ]
(Permanent Open Space   )
Impervious value, Ai = 0.000
Sub-Area C Value = 0.350
Initial subarea total flow distance  =  250.000(Ft.)
Highest elevation =  163.000(Ft.)
Lowest elevation =  139.000(Ft.)
Elevation difference =   24.000(Ft.) Slope =  9.600 %
INITIAL AREA TIME OF CONCENTRATION CALCULATIONS:
The maximum overland flow distance is 100.00 (Ft)
for the top area slope value of   9.60 %, in a development type of
 Permanent Open Space
In Accordance With Figure 3-3
Initial Area Time of Concentration =   6.35 minutes
TC = [1.8*(1.1-C)*distance(Ft.)^.5)/(% slope^(1/3)]
TC = [1.8*(1.1-0.3500)*( 100.000^.5)/(   9.600^(1/3)]=   6.35
The initial area total distance of  250.00 (Ft.) entered leaves a
remaining distance of  150.00 (Ft.)
Using Figure 3-4, the travel time for this distance is   0.91 minutes
for a distance of 150.00 (Ft.) and a slope of  9.60 %
with an elevation difference of  14.40(Ft.) from the end of the top area
Tt = [11.9*length(Mi)^3)/(elevation change(Ft.))]^.385 *60(min/hr)
 =    0.912 Minutes
Tt=[(11.9*0.0284^3)/( 14.40)]^.385=  0.91
Total initial area Ti =   6.35 minutes from Figure 3-3 formula plus
  0.91 minutes from the Figure 3-4 formula =   7.26 minutes
Rainfall intensity (I) =      6.005(In/Hr) for a   100.0 year storm
Effective runoff coefficient used for area (Q=KCIA) is C = 0.350
Subarea runoff =      2.144(CFS)
Total initial stream area =        1.020(Ac.)


++++++++++++++++++++++++++++++++++++++++++++++++++++++++++++++++++++++
Process from Point/Station      301.000 to Point/Station      302.000
**** IMPROVED CHANNEL TRAVEL TIME ****
______________________________________________________________________
Upstream point elevation =   139.000(Ft.)
Downstream point elevation =   111.000(Ft.)
Channel length thru subarea  =    60.000(Ft.)
Channel base width =   10.000(Ft.)
Slope or 'Z' of left channel bank =   2.000
Slope or 'Z' of right channel bank =   2.000
Manning's 'N'    = 0.045
Maximum depth of channel  =    1.000(Ft.)
Flow(q) thru subarea =      2.144(CFS)
Depth of flow =   0.061(Ft.), Average velocity =   3.466(Ft/s)
Channel flow top width =   10.244(Ft.)
Flow Velocity =    3.47(Ft/s)
Travel time  =    0.29 min.
Time of concentration =    7.55 min.
Critical depth =      0.111(Ft.)


++++++++++++++++++++++++++++++++++++++++++++++++++++++++++++++++++++++
Process from Point/Station      302.000 to Point/Station      303.000
**** IMPROVED CHANNEL TRAVEL TIME ****
______________________________________________________________________
```

```
Upstream point elevation =   111.000(Ft.)
Downstream point elevation =   103.000(Ft.)
Channel length thru subarea  =   450.000(Ft.)
Channel base width =   10.000(Ft.)
Slope or 'Z' of left channel bank =  50.000
Slope or 'Z' of right channel bank =  50.000
Estimated mean flow rate at midpoint of channel =      6.998(CFS)
Manning's 'N'    = 0.030
Maximum depth of channel  =    1.000(Ft.)
Flow(q) thru subarea =      6.998(CFS)
Depth of flow =   0.201(Ft.), Average velocity =   1.730(Ft/s)
Channel flow top width =   30.146(Ft.)
Flow Velocity =    1.73(Ft/s)
Travel time  =    4.33 min.
Time of concentration =   11.89 min.
Critical depth =      0.184(Ft.)
 Adding area flow to channel
Decimal fraction soil group A = 0.000
Decimal fraction soil group B = 0.000
Decimal fraction soil group C = 0.000
Decimal fraction soil group D = 1.000
[UNDISTURBED NATURAL TERRAIN                  ]
(Permanent Open Space   )
Impervious value, Ai = 0.000
Sub-Area C Value = 0.350
Rainfall intensity =      4.371(In/Hr) for a   100.0 year storm
Effective runoff coefficient used for total area
(Q=KCIA) is C = 0.350  CA =      2.691
Subarea runoff =      9.620(CFS) for      6.670(Ac.)
Total runoff =     11.764(CFS)  Total area =       7.690(Ac.)
Depth of flow =   0.258(Ft.), Average velocity =   1.988(Ft/s)
Critical depth =      0.240(Ft.)


++++++++++++++++++++++++++++++++++++++++++++++++++++++++++++++++++++++
Process from Point/Station      303.000 to Point/Station      304.000
**** PIPEFLOW TRAVEL TIME (Program estimated size) ****
______________________________________________________________________
Upstream point/station elevation =    93.500(Ft.)
Downstream point/station elevation =    71.300(Ft.)
Pipe length  =   119.00(Ft.)   Manning's N = 0.013
No. of pipes = 1  Required pipe flow  =    11.764(CFS)
Nearest computed pipe diameter  =     12.00(In.)
Calculated individual pipe flow  =    11.764(CFS)
Normal flow depth in pipe =    7.86(In.)
Flow top width inside pipe =   11.41(In.)
Critical depth could not be calculated.
Pipe flow velocity =     21.59(Ft/s)
Travel time through pipe =    0.09 min.
Time of concentration (TC) =    11.98 min.


++++++++++++++++++++++++++++++++++++++++++++++++++++++++++++++++++++++
Process from Point/Station      306.000 to Point/Station      304.000
**** SUBAREA FLOW ADDITION ****
______________________________________________________________________
Decimal fraction soil group A = 0.000
Decimal fraction soil group B = 0.000
Decimal fraction soil group C = 0.000
Decimal fraction soil group D = 1.000
```

```
[UNDISTURBED NATURAL TERRAIN                    ]
(Permanent Open Space   )
Impervious value, Ai = 0.000
Sub-Area C Value = 0.350
Time of concentration =    11.98 min.
Rainfall intensity =      4.349(In/Hr) for a   100.0 year storm
Effective runoff coefficient used for total area
(Q=KCIA) is C = 0.350  CA =      2.821
Subarea runoff =      0.505(CFS) for      0.370(Ac.)
Total runoff =     12.269(CFS)  Total area =       8.060(Ac.)


++++++++++++++++++++++++++++++++++++++++++++++++++++++++++++++++++++++
Process from Point/Station      307.000 to Point/Station      304.000
**** SUBAREA FLOW ADDITION ****
______________________________________________________________________
Decimal fraction soil group A = 0.000
Decimal fraction soil group B = 0.000
Decimal fraction soil group C = 0.000
Decimal fraction soil group D = 1.000
[UNDISTURBED NATURAL TERRAIN                    ]
(Permanent Open Space   )
Impervious value, Ai = 0.000
Sub-Area C Value = 0.350
Time of concentration =    11.98 min.
Rainfall intensity =      4.349(In/Hr) for a   100.0 year storm
Effective runoff coefficient used for total area
(Q=KCIA) is C = 0.350  CA =      3.430
Subarea runoff =      2.649(CFS) for      1.740(Ac.)
Total runoff =     14.917(CFS)  Total area =       9.800(Ac.)


++++++++++++++++++++++++++++++++++++++++++++++++++++++++++++++++++++++
Process from Point/Station      308.000 to Point/Station      304.000
**** SUBAREA FLOW ADDITION ****
______________________________________________________________________
Decimal fraction soil group A = 0.000
Decimal fraction soil group B = 0.000
Decimal fraction soil group C = 0.000
Decimal fraction soil group D = 1.000
[UNDISTURBED NATURAL TERRAIN                    ]
(Permanent Open Space   )
Impervious value, Ai = 0.000
Sub-Area C Value = 0.350
Time of concentration =    11.98 min.
Rainfall intensity =      4.349(In/Hr) for a   100.0 year storm
Effective runoff coefficient used for total area
(Q=KCIA) is C = 0.350  CA =      3.608
Subarea runoff =      0.776(CFS) for      0.510(Ac.)
Total runoff =     15.694(CFS)  Total area =      10.310(Ac.)


++++++++++++++++++++++++++++++++++++++++++++++++++++++++++++++++++++++
Process from Point/Station      309.000 to Point/Station      304.000
**** SUBAREA FLOW ADDITION ****
______________________________________________________________________
Decimal fraction soil group A = 0.000
Decimal fraction soil group B = 0.000
Decimal fraction soil group C = 0.000
Decimal fraction soil group D = 1.000
```

```
[INDUSTRIAL area type                          ]
(General Industrial        )
Impervious value, Ai = 0.950
Sub-Area C Value = 0.870
Time of concentration =    11.98 min.
Rainfall intensity =      4.349(In/Hr) for a   100.0 year storm
Effective runoff coefficient used for total area
(Q=KCIA) is C = 0.368  CA =      3.922
Subarea runoff =      1.362(CFS) for      0.360(Ac.)
Total runoff =     17.056(CFS)  Total area =      10.670(Ac.)


++++++++++++++++++++++++++++++++++++++++++++++++++++++++++++++++++++++++
Process from Point/Station      303.000 to Point/Station      304.000
**** CONFLUENCE OF MAIN STREAMS ****
________________________________________________________________________
The following data inside Main Stream is listed:
In Main Stream number: 3
Stream flow area =     10.670(Ac.)
Runoff from this stream =     17.056(CFS)
Time of concentration =   11.98 min.
Rainfall intensity =     4.349(In/Hr)
Summary of stream data:

Stream   Flow rate      TC            Rainfall Intensity
 No.       (CFS)       (min)                 (In/Hr)


1      209.856     11.78          4.395
2       36.387      9.14          5.178
3       17.056     11.98          4.349
Qmax(1) =
         1.000 *    1.000 *   209.856) +
         0.849 *    1.000 *    36.387) +
         1.000 *    0.984 *    17.056) + =     257.519
Qmax(2) =
         1.000 *    0.775 *   209.856) +
         1.000 *    1.000 *    36.387) +
         1.000 *    0.763 *    17.056) + =     212.141
Qmax(3) =
         0.990 *    1.000 *   209.856) +
         0.840 *    1.000 *    36.387) +
         1.000 *    1.000 *    17.056) + =     255.270

Total of 3 main streams to confluence:
Flow rates before confluence point:
     209.856      36.387      17.056
Maximum flow rates at confluence using above data:
      257.519      212.141      255.270
Area of streams before confluence:
       71.350       16.540       10.670


Results of confluence:
Total flow rate =    257.519(CFS)
Time of concentration =    11.784 min.
Effective stream area after confluence  =     98.560(Ac.)
End of computations, total study area =          98.560 (Ac.)
```

```
                San Diego County Rational Hydrology Program

CIVILCADD/CIVILDESIGN Engineering Software,(c)1991-2004 Version 7.4

Rational method hydrology  program based on
San Diego County Flood Control Division 2003 hydrology manual
      Rational Hydrology Study        Date: 10/02/12
----------------------------------------------------------------------
2468 QUARRY CREEK
EXISTING CONDITIONS
SYSTEM 400
FILE: S400E100
----------------------------------------------------------------------
 *********   Hydrology Study Control Information **********

----------------------------------------------------------------------


Program License Serial Number 4049

----------------------------------------------------------------------
Rational hydrology study storm event year is   100.0
English (in-lb) input data Units used

Map data precipitation entered:
6 hour,  precipitation(inches) =  2.900
24 hour precipitation(inches) =  5.100
P6/P24 =    56.9%
San Diego hydrology manual 'C' values used


++++++++++++++++++++++++++++++++++++++++++++++++++++++++++++++++++++++
Process from Point/Station      400.000 to Point/Station      401.000
**** INITIAL AREA EVALUATION ****
______________________________________________________________________
Decimal fraction soil group A = 0.000
Decimal fraction soil group B = 0.000
Decimal fraction soil group C = 0.000
Decimal fraction soil group D = 1.000
[MEDIUM DENSITY RESIDENTIAL                    ]
(7.3 DU/A or Less       )
Impervious value, Ai = 0.400
Sub-Area C Value = 0.570
Initial subarea total flow distance  =  100.000(Ft.)
Highest elevation =  362.000(Ft.)
Lowest elevation =  361.000(Ft.)
Elevation difference =    1.000(Ft.) Slope =  1.000 %
INITIAL AREA TIME OF CONCENTRATION CALCULATIONS:
The maximum overland flow distance is 65.00 (Ft)
for the top area slope value of   1.00 %, in a development type of
 7.3 DU/A or Less
In Accordance With Table 3-2
Initial Area Time of Concentration =   8.40 minutes
 (for slope value of   1.00 %)
Rainfall intensity (I) =      5.468(In/Hr) for a   100.0 year storm
Effective runoff coefficient used for area (Q=KCIA) is C = 0.570
Subarea runoff =      0.405(CFS)
Total initial stream area =        0.130(Ac.)
```

```
++++++++++++++++++++++++++++++++++++++++++++++++++++++++++++++++++++++
Process from Point/Station      401.000 to Point/Station      402.000
**** STREET FLOW TRAVEL TIME + SUBAREA FLOW ADDITION ****
______________________________________________________________________
Top of street segment elevation =   361.000(Ft.)
End of street segment elevation =   329.000(Ft.)
Length of street segment  =   815.000(Ft.)
Height of curb above gutter flowline  =    6.0(In.)
Width of half street (curb to crown)  =  22.000(Ft.)
Distance from crown to crossfall grade break  =  18.000(Ft.)
Slope from gutter to grade break (v/hz) =   0.020
Slope from grade break to crown (v/hz)  =   0.020
Street flow is on [1] side(s) of the street
Distance from curb to property line  =  10.000(Ft.)
Slope from curb to property line (v/hz) =   0.020
Gutter width =   1.500(Ft.)
Gutter hike from flowline =  1.500(In.)
 Manning's N in gutter =  0.0150
 Manning's N from gutter to grade break =  0.0180
 Manning's N from grade break to crown =  0.0180
Estimated mean flow rate at midpoint of street =      6.049(CFS)
Depth of flow =   0.332(Ft.), Average velocity =   4.099(Ft/s)
Streetflow hydraulics at midpoint of street travel:
Halfstreet flow width =  11.852(Ft.)
Flow velocity =   4.10(Ft/s)
Travel time =    3.31 min.     TC =   11.71  min.
 Adding area flow to street
Decimal fraction soil group A = 0.000
Decimal fraction soil group B = 0.000
Decimal fraction soil group C = 0.000
Decimal fraction soil group D = 1.000
[MEDIUM DENSITY RESIDENTIAL                    ]
(4.3 DU/A or Less       )
Impervious value, Ai = 0.300
Sub-Area C Value = 0.520
Rainfall intensity =      4.412(In/Hr) for a   100.0 year storm
Effective runoff coefficient used for total area
(Q=KCIA) is C = 0.521  CA =      2.633
Subarea runoff =     11.210(CFS) for      4.920(Ac.)
Total runoff =     11.615(CFS)  Total area =       5.050(Ac.)
Street flow at end of street =     11.615(CFS)
Half street flow at end of street =     11.615(CFS)
Depth of flow =   0.402(Ft.), Average velocity =   4.789(Ft/s)
Flow width (from curb towards crown)=  15.344(Ft.)


++++++++++++++++++++++++++++++++++++++++++++++++++++++++++++++++++++++
Process from Point/Station      402.000 to Point/Station      403.000
**** PIPEFLOW TRAVEL TIME (Program estimated size) ****
______________________________________________________________________
Upstream point/station elevation =   329.000(Ft.)
Downstream point/station elevation =   310.000(Ft.)
Pipe length  =   185.00(Ft.)   Manning's N = 0.013
No. of pipes = 1  Required pipe flow  =    11.615(CFS)
Nearest computed pipe diameter  =     15.00(In.)
Calculated individual pipe flow  =    11.615(CFS)
Normal flow depth in pipe =    8.04(In.)
Flow top width inside pipe =   14.96(In.)
Critical depth could not be calculated.
```

```
Pipe flow velocity =     17.36(Ft/s)
Travel time through pipe =    0.18 min.
Time of concentration (TC) =    11.89 min.


++++++++++++++++++++++++++++++++++++++++++++++++++++++++++++++++++++++
Process from Point/Station      402.000 to Point/Station      403.000
**** SUBAREA FLOW ADDITION ****
______________________________________________________________________
Decimal fraction soil group A = 0.000
Decimal fraction soil group B = 0.000
Decimal fraction soil group C = 0.000
Decimal fraction soil group D = 1.000
[UNDISTURBED NATURAL TERRAIN                    ]
(Permanent Open Space   )
Impervious value, Ai = 0.000
Sub-Area C Value = 0.350
Time of concentration =    11.89 min.
Rainfall intensity =      4.370(In/Hr) for a   100.0 year storm
Effective runoff coefficient used for total area
(Q=KCIA) is C = 0.506  CA =      2.804
Subarea runoff =      0.637(CFS) for      0.490(Ac.)
Total runoff =     12.252(CFS)  Total area =       5.540(Ac.)


++++++++++++++++++++++++++++++++++++++++++++++++++++++++++++++++++++++
Process from Point/Station      402.000 to Point/Station      403.000
**** CONFLUENCE OF MAIN STREAMS ****
______________________________________________________________________
The following data inside Main Stream is listed:
In Main Stream number: 1
Stream flow area =      5.540(Ac.)
Runoff from this stream =     12.252(CFS)
Time of concentration =   11.89 min.
Rainfall intensity =     4.370(In/Hr)
Program is now starting with Main Stream No. 2


++++++++++++++++++++++++++++++++++++++++++++++++++++++++++++++++++++++
Process from Point/Station      404.000 to Point/Station      405.000
**** INITIAL AREA EVALUATION ****
______________________________________________________________________
Decimal fraction soil group A = 0.000
Decimal fraction soil group B = 0.000
Decimal fraction soil group C = 0.000
Decimal fraction soil group D = 1.000
[MEDIUM DENSITY RESIDENTIAL                     ]
(7.3 DU/A or Less       )
Impervious value, Ai = 0.400
Sub-Area C Value = 0.570
Initial subarea total flow distance  =   70.000(Ft.)
Highest elevation =  330.000(Ft.)
Lowest elevation =  329.300(Ft.)
Elevation difference =    0.700(Ft.) Slope =  1.000 %
INITIAL AREA TIME OF CONCENTRATION CALCULATIONS:
The maximum overland flow distance is 65.00 (Ft)
for the top area slope value of   1.00 %, in a development type of
 7.3 DU/A or Less
In Accordance With Table 3-2
Initial Area Time of Concentration =   8.40 minutes
```

```
 (for slope value of   1.00 %)
Rainfall intensity (I) =      5.468(In/Hr) for a   100.0 year storm
Effective runoff coefficient used for area (Q=KCIA) is C = 0.570
Subarea runoff =      0.343(CFS)
Total initial stream area =        0.110(Ac.)


++++++++++++++++++++++++++++++++++++++++++++++++++++++++++++++++++++++
Process from Point/Station      405.000 to Point/Station      405.000
**** SUBAREA FLOW ADDITION ****
______________________________________________________________________
Decimal fraction soil group A = 0.000
Decimal fraction soil group B = 0.000
Decimal fraction soil group C = 0.000
Decimal fraction soil group D = 1.000
[MEDIUM DENSITY RESIDENTIAL                    ]
(7.3 DU/A or Less       )
Impervious value, Ai = 0.400
Sub-Area C Value = 0.570
Time of concentration =     8.40 min.
Rainfall intensity =      5.468(In/Hr) for a   100.0 year storm
Effective runoff coefficient used for total area
(Q=KCIA) is C = 0.570  CA =      0.393
Subarea runoff =      1.808(CFS) for      0.580(Ac.)
Total runoff =      2.150(CFS)  Total area =       0.690(Ac.)


++++++++++++++++++++++++++++++++++++++++++++++++++++++++++++++++++++++
Process from Point/Station      405.000 to Point/Station      406.000
**** PIPEFLOW TRAVEL TIME (Program estimated size) ****
______________________________________________________________________
Upstream point/station elevation =   329.300(Ft.)
Downstream point/station elevation =   322.300(Ft.)
Pipe length  =   400.00(Ft.)   Manning's N = 0.013
No. of pipes = 1  Required pipe flow  =     2.150(CFS)
Nearest computed pipe diameter  =      9.00(In.)
Calculated individual pipe flow  =     2.150(CFS)
Normal flow depth in pipe =    7.24(In.)
Flow top width inside pipe =    7.14(In.)
Critical Depth =    7.92(In.)
Pipe flow velocity =      5.65(Ft/s)
Travel time through pipe =    1.18 min.
Time of concentration (TC) =     9.58 min.


++++++++++++++++++++++++++++++++++++++++++++++++++++++++++++++++++++++
Process from Point/Station      405.000 to Point/Station      406.000
**** CONFLUENCE OF MINOR STREAMS ****
______________________________________________________________________
Along Main Stream number: 2 in normal stream number 1
Stream flow area =      0.690(Ac.)
Runoff from this stream =      2.150(CFS)
Time of concentration =    9.58 min.
Rainfall intensity =     5.023(In/Hr)


++++++++++++++++++++++++++++++++++++++++++++++++++++++++++++++++++++++
Process from Point/Station      407.000 to Point/Station      408.000
**** INITIAL AREA EVALUATION ****
______________________________________________________________________
```

```
Decimal fraction soil group A = 0.000
Decimal fraction soil group B = 0.000
Decimal fraction soil group C = 0.000
Decimal fraction soil group D = 1.000
[MEDIUM DENSITY RESIDENTIAL                    ]
(7.3 DU/A or Less        )
Impervious value, Ai = 0.400
Sub-Area C Value = 0.570
Initial subarea total flow distance  =  100.000(Ft.)
Highest elevation =  325.000(Ft.)
Lowest elevation =  324.000(Ft.)
Elevation difference =    1.000(Ft.) Slope =  1.000 %
INITIAL AREA TIME OF CONCENTRATION CALCULATIONS:
The maximum overland flow distance is 65.00 (Ft)
for the top area slope value of   1.00 %, in a development type of
 7.3 DU/A or Less
In Accordance With Table 3-2
Initial Area Time of Concentration =   8.40 minutes
 (for slope value of   1.00 %)
Rainfall intensity (I) =      5.468(In/Hr) for a   100.0 year storm
Effective runoff coefficient used for area (Q=KCIA) is C = 0.570
Subarea runoff =      0.654(CFS)
Total initial stream area =        0.210(Ac.)


++++++++++++++++++++++++++++++++++++++++++++++++++++++++++++++++++++++
Process from Point/Station      408.000 to Point/Station      409.000
**** STREET FLOW TRAVEL TIME + SUBAREA FLOW ADDITION ****
______________________________________________________________________
Top of street segment elevation =   324.000(Ft.)
End of street segment elevation =   320.200(Ft.)
Length of street segment  =   395.000(Ft.)
Height of curb above gutter flowline  =    6.0(In.)
Width of half street (curb to crown)  =  22.000(Ft.)
Distance from crown to crossfall grade break  =  18.000(Ft.)
Slope from gutter to grade break (v/hz) =   0.020
Slope from grade break to crown (v/hz)  =   0.020
Street flow is on [1] side(s) of the street
Distance from curb to property line  =  10.000(Ft.)
Slope from curb to property line (v/hz) =   0.020
Gutter width =   1.500(Ft.)
Gutter hike from flowline =  1.500(In.)
 Manning's N in gutter =  0.0150
 Manning's N from gutter to grade break =  0.0180
 Manning's N from grade break to crown =  0.0180
Estimated mean flow rate at midpoint of street =      5.650(CFS)
Depth of flow =   0.400(Ft.), Average velocity =   2.360(Ft/s)
Streetflow hydraulics at midpoint of street travel:
Halfstreet flow width =  15.240(Ft.)
Flow velocity =   2.36(Ft/s)
Travel time =    2.79 min.     TC =   11.19  min.
 Adding area flow to street
Decimal fraction soil group A = 0.000
Decimal fraction soil group B = 0.000
Decimal fraction soil group C = 0.000
Decimal fraction soil group D = 1.000
[MEDIUM DENSITY RESIDENTIAL                    ]
(7.3 DU/A or Less        )
Impervious value, Ai = 0.400
Sub-Area C Value = 0.570
```

```
Rainfall intensity =      4.545(In/Hr) for a   100.0 year storm
Effective runoff coefficient used for total area
(Q=KCIA) is C = 0.570  CA =      2.326
Subarea runoff =      9.915(CFS) for      3.870(Ac.)
Total runoff =     10.569(CFS)  Total area =       4.080(Ac.)
Street flow at end of street =     10.569(CFS)
Half street flow at end of street =     10.569(CFS)
Depth of flow =   0.484(Ft.), Average velocity =   2.747(Ft/s)
Flow width (from curb towards crown)=  19.431(Ft.)


++++++++++++++++++++++++++++++++++++++++++++++++++++++++++++++++++++++
Process from Point/Station      409.000 to Point/Station      406.000
**** PIPEFLOW TRAVEL TIME (Program estimated size) ****
______________________________________________________________________
Upstream point/station elevation =   320.200(Ft.)
Downstream point/station elevation =   317.300(Ft.)
Pipe length  =   290.00(Ft.)   Manning's N = 0.013
No. of pipes = 1  Required pipe flow  =    10.569(CFS)
Nearest computed pipe diameter  =     21.00(In.)
Calculated individual pipe flow  =    10.569(CFS)
Normal flow depth in pipe =   12.54(In.)
Flow top width inside pipe =   20.60(In.)
Critical Depth =   14.54(In.)
Pipe flow velocity =      7.05(Ft/s)
Travel time through pipe =    0.69 min.
Time of concentration (TC) =    11.87 min.


++++++++++++++++++++++++++++++++++++++++++++++++++++++++++++++++++++++
Process from Point/Station      409.000 to Point/Station      406.000
**** CONFLUENCE OF MINOR STREAMS ****
______________________________________________________________________
Along Main Stream number: 2 in normal stream number 2
Stream flow area =      4.080(Ac.)
Runoff from this stream =     10.569(CFS)
Time of concentration =   11.87 min.
Rainfall intensity =     4.374(In/Hr)
Summary of stream data:

Stream   Flow rate      TC            Rainfall Intensity
 No.       (CFS)       (min)                 (In/Hr)


1        2.150      9.58          5.023
2       10.569     11.87          4.374
Qmax(1) =
         1.000 *    1.000 *     2.150) +
         1.000 *    0.807 *    10.569) + =      10.678
Qmax(2) =
         0.871 *    1.000 *     2.150) +
         1.000 *    1.000 *    10.569) + =      12.441

Total of 2 streams to confluence:
Flow rates before confluence point:
       2.150      10.569
Maximum flow rates at confluence using above data:
       10.678      12.441
Area of streams before confluence:
        0.690       4.080
```

```
Results of confluence:
Total flow rate =     12.441(CFS)
Time of concentration =    11.874 min.
Effective stream area after confluence =      4.770(Ac.)


++++++++++++++++++++++++++++++++++++++++++++++++++++++++++++++++++++++
Process from Point/Station      406.000 to Point/Station      403.000
**** PIPEFLOW TRAVEL TIME (Program estimated size) ****
______________________________________________________________________
Upstream point/station elevation =   317.300(Ft.)
Downstream point/station elevation =   300.000(Ft.)
Pipe length  =   225.00(Ft.)   Manning's N = 0.013
No. of pipes = 1  Required pipe flow  =    12.441(CFS)
Nearest computed pipe diameter  =     15.00(In.)
Calculated individual pipe flow  =    12.441(CFS)
Normal flow depth in pipe =    9.20(In.)
Flow top width inside pipe =   14.61(In.)
Critical depth could not be calculated.
Pipe flow velocity =     15.77(Ft/s)
Travel time through pipe =    0.24 min.
Time of concentration (TC) =    12.11 min.


++++++++++++++++++++++++++++++++++++++++++++++++++++++++++++++++++++++
Process from Point/Station      406.000 to Point/Station      403.000
**** CONFLUENCE OF MAIN STREAMS ****
______________________________________________________________________
The following data inside Main Stream is listed:
In Main Stream number: 2
Stream flow area =      4.770(Ac.)
Runoff from this stream =     12.441(CFS)
Time of concentration =   12.11 min.
Rainfall intensity =     4.318(In/Hr)
Summary of stream data:

Stream   Flow rate      TC            Rainfall Intensity
 No.       (CFS)       (min)                 (In/Hr)


1       12.252     11.89          4.370
2       12.441     12.11          4.318
Qmax(1) =
         1.000 *    1.000 *    12.252) +
         1.000 *    0.982 *    12.441) + =      24.467
Qmax(2) =
         0.988 *    1.000 *    12.252) +
         1.000 *    1.000 *    12.441) + =      24.549

Total of 2 main streams to confluence:
Flow rates before confluence point:
      12.252      12.441
Maximum flow rates at confluence using above data:
       24.467       24.549
Area of streams before confluence:
        5.540        4.770


Results of confluence:
Total flow rate =     24.549(CFS)
```

```
Time of concentration =    12.112 min.
Effective stream area after confluence  =     10.310(Ac.)


++++++++++++++++++++++++++++++++++++++++++++++++++++++++++++++++++++++
Process from Point/Station      403.000 to Point/Station      410.000
**** IMPROVED CHANNEL TRAVEL TIME ****
______________________________________________________________________
Upstream point elevation =   300.000(Ft.)
Downstream point elevation =   259.500(Ft.)
Channel length thru subarea  =   835.000(Ft.)
Channel base width =    0.500(Ft.)
Slope or 'Z' of left channel bank =   2.000
Slope or 'Z' of right channel bank =   2.000
Estimated mean flow rate at midpoint of channel =     25.133(CFS)
Manning's 'N'    = 0.018
Maximum depth of channel  =    1.000(Ft.)
Flow(q) thru subarea =     25.133(CFS)
Depth of flow =   0.946(Ft.), Average velocity =  11.117(Ft/s)
Channel flow top width =    4.282(Ft.)
Flow Velocity =   11.12(Ft/s)
Travel time  =    1.25 min.
Time of concentration =   13.36 min.
Critical depth =      1.438(Ft.)
 Adding area flow to channel
Decimal fraction soil group A = 0.000
Decimal fraction soil group B = 0.000
Decimal fraction soil group C = 0.000
Decimal fraction soil group D = 1.000
[UNDISTURBED NATURAL TERRAIN                  ]
(Permanent Open Space   )
Impervious value, Ai = 0.000
Sub-Area C Value = 0.350
Rainfall intensity =      4.053(In/Hr) for a   100.0 year storm
Effective runoff coefficient used for total area
(Q=KCIA) is C = 0.502  CA =      6.328
Subarea runoff =      1.095(CFS) for      2.300(Ac.)
Total runoff =     25.645(CFS)  Total area =      12.610(Ac.)
Depth of flow =   0.954(Ft.), Average velocity =  11.173(Ft/s)
Critical depth =      1.453(Ft.)


++++++++++++++++++++++++++++++++++++++++++++++++++++++++++++++++++++++
Process from Point/Station      403.000 to Point/Station      410.000
**** CONFLUENCE OF MAIN STREAMS ****
______________________________________________________________________
The following data inside Main Stream is listed:
In Main Stream number: 1
Stream flow area =     12.610(Ac.)
Runoff from this stream =     25.645(CFS)
Time of concentration =   13.36 min.
Rainfall intensity =     4.053(In/Hr)
Program is now starting with Main Stream No. 2


++++++++++++++++++++++++++++++++++++++++++++++++++++++++++++++++++++++
Process from Point/Station      411.000 to Point/Station      412.000
**** INITIAL AREA EVALUATION ****
______________________________________________________________________
Decimal fraction soil group A = 0.000
```

```
Decimal fraction soil group B = 0.000
Decimal fraction soil group C = 0.000
Decimal fraction soil group D = 1.000
[MEDIUM DENSITY RESIDENTIAL                    ]
(7.3 DU/A or Less       )
Impervious value, Ai = 0.400
Sub-Area C Value = 0.570
Initial subarea total flow distance  =   60.000(Ft.)
Highest elevation =  330.000(Ft.)
Lowest elevation =  329.400(Ft.)
Elevation difference =    0.600(Ft.) Slope =  1.000 %
INITIAL AREA TIME OF CONCENTRATION CALCULATIONS:
The maximum overland flow distance is 65.00 (Ft)
for the top area slope value of   1.00 %, in a development type of
 7.3 DU/A or Less
In Accordance With Table 3-2
Initial Area Time of Concentration =   8.40 minutes
 (for slope value of   1.00 %)
Rainfall intensity (I) =      5.468(In/Hr) for a   100.0 year storm
Effective runoff coefficient used for area (Q=KCIA) is C = 0.570
Subarea runoff =      0.374(CFS)
Total initial stream area =        0.120(Ac.)


++++++++++++++++++++++++++++++++++++++++++++++++++++++++++++++++++++++
Process from Point/Station      412.000 to Point/Station      413.000
**** IMPROVED CHANNEL TRAVEL TIME ****
______________________________________________________________________
Upstream point elevation =   329.400(Ft.)
Downstream point elevation =   326.000(Ft.)
Channel length thru subarea  =   250.000(Ft.)
Channel base width =    0.500(Ft.)
Slope or 'Z' of left channel bank =   2.000
Slope or 'Z' of right channel bank =   2.000
Estimated mean flow rate at midpoint of channel =      1.735(CFS)
Manning's 'N'    = 0.015
Maximum depth of channel  =    1.000(Ft.)
Flow(q) thru subarea =      1.735(CFS)
Depth of flow =   0.356(Ft.), Average velocity =   4.030(Ft/s)
Channel flow top width =    1.922(Ft.)
Flow Velocity =    4.03(Ft/s)
Travel time  =    1.03 min.
Time of concentration =    9.43 min.
Critical depth =      0.434(Ft.)
 Adding area flow to channel
Decimal fraction soil group A = 0.000
Decimal fraction soil group B = 0.000
Decimal fraction soil group C = 0.000
Decimal fraction soil group D = 1.000
[MEDIUM DENSITY RESIDENTIAL                    ]
(7.3 DU/A or Less       )
Impervious value, Ai = 0.400
Sub-Area C Value = 0.570
Rainfall intensity =      5.073(In/Hr) for a   100.0 year storm
Effective runoff coefficient used for total area
(Q=KCIA) is C = 0.570  CA =      0.599
Subarea runoff =      2.662(CFS) for      0.930(Ac.)
Total runoff =      3.036(CFS)  Total area =       1.050(Ac.)
Depth of flow =   0.460(Ft.), Average velocity =   4.650(Ft/s)
Critical depth =      0.566(Ft.)
```

```
++++++++++++++++++++++++++++++++++++++++++++++++++++++++++++++++++++++
Process from Point/Station      413.000 to Point/Station      414.000
**** PIPEFLOW TRAVEL TIME (Program estimated size) ****
______________________________________________________________________
Upstream point/station elevation =   326.000(Ft.)
Downstream point/station elevation =   320.500(Ft.)
Pipe length  =   375.00(Ft.)   Manning's N = 0.013
No. of pipes = 1  Required pipe flow  =     3.036(CFS)
Nearest computed pipe diameter  =     12.00(In.)
Calculated individual pipe flow  =     3.036(CFS)
Normal flow depth in pipe =    7.42(In.)
Flow top width inside pipe =   11.66(In.)
Critical Depth =    8.96(In.)
Pipe flow velocity =      5.95(Ft/s)
Travel time through pipe =    1.05 min.
Time of concentration (TC) =    10.48 min.


++++++++++++++++++++++++++++++++++++++++++++++++++++++++++++++++++++++
Process from Point/Station      413.000 to Point/Station      414.000
**** SUBAREA FLOW ADDITION ****
______________________________________________________________________
Decimal fraction soil group A = 0.000
Decimal fraction soil group B = 0.000
Decimal fraction soil group C = 0.000
Decimal fraction soil group D = 1.000
[MEDIUM DENSITY RESIDENTIAL                    ]
(7.3 DU/A or Less       )
Impervious value, Ai = 0.400
Sub-Area C Value = 0.570
Time of concentration =    10.48 min.
Rainfall intensity =      4.739(In/Hr) for a   100.0 year storm
Effective runoff coefficient used for total area
(Q=KCIA) is C = 0.570  CA =      2.816
Subarea runoff =     10.309(CFS) for      3.890(Ac.)
Total runoff =     13.345(CFS)  Total area =       4.940(Ac.)


++++++++++++++++++++++++++++++++++++++++++++++++++++++++++++++++++++++
Process from Point/Station      414.000 to Point/Station      415.000
**** PIPEFLOW TRAVEL TIME (Program estimated size) ****
______________________________________________________________________
Upstream point/station elevation =   320.500(Ft.)
Downstream point/station elevation =   316.600(Ft.)
Pipe length  =   430.00(Ft.)   Manning's N = 0.013
No. of pipes = 1  Required pipe flow  =    13.345(CFS)
Nearest computed pipe diameter  =     21.00(In.)
Calculated individual pipe flow  =    13.345(CFS)
Normal flow depth in pipe =   15.35(In.)
Flow top width inside pipe =   18.62(In.)
Critical Depth =   16.32(In.)
Pipe flow velocity =      7.08(Ft/s)
Travel time through pipe =    1.01 min.
Time of concentration (TC) =    11.50 min.


++++++++++++++++++++++++++++++++++++++++++++++++++++++++++++++++++++++
Process from Point/Station      414.000 to Point/Station      415.000
```

```
**** SUBAREA FLOW ADDITION ****
_____________________________________________________________________
Decimal fraction soil group A = 0.000
Decimal fraction soil group B = 0.000
Decimal fraction soil group C = 0.000
Decimal fraction soil group D = 1.000
[MEDIUM DENSITY RESIDENTIAL                    ]
(7.3 DU/A or Less        )
Impervious value, Ai = 0.400
Sub-Area C Value = 0.570
Time of concentration =    11.50 min.
Rainfall intensity =      4.466(In/Hr) for a   100.0 year storm
Effective runoff coefficient used for total area
(Q=KCIA) is C = 0.570  CA =      4.212
Subarea runoff =      5.467(CFS) for      2.450(Ac.)
Total runoff =     18.812(CFS)  Total area =       7.390(Ac.)


++++++++++++++++++++++++++++++++++++++++++++++++++++++++++++++++++++++
Process from Point/Station      415.000 to Point/Station      416.000
**** PIPEFLOW TRAVEL TIME (Program estimated size) ****
_____________________________________________________________________
Upstream point/station elevation =   316.600(Ft.)
Downstream point/station elevation =   306.000(Ft.)
Pipe length  =   280.00(Ft.)   Manning's N = 0.013
No. of pipes = 1  Required pipe flow  =    18.812(CFS)
Nearest computed pipe diameter  =     18.00(In.)
Calculated individual pipe flow  =    18.812(CFS)
Normal flow depth in pipe =   13.62(In.)
Flow top width inside pipe =   15.45(In.)
Critical depth could not be calculated.
Pipe flow velocity =     13.12(Ft/s)
Travel time through pipe =    0.36 min.
Time of concentration (TC) =    11.85 min.


++++++++++++++++++++++++++++++++++++++++++++++++++++++++++++++++++++++
Process from Point/Station      415.000 to Point/Station      416.000
**** CONFLUENCE OF MINOR STREAMS ****
_____________________________________________________________________
Along Main Stream number: 2 in normal stream number 1
Stream flow area =      7.390(Ac.)
Runoff from this stream =     18.812(CFS)
Time of concentration =   11.85 min.
Rainfall intensity =     4.379(In/Hr)


++++++++++++++++++++++++++++++++++++++++++++++++++++++++++++++++++++++
Process from Point/Station      417.000 to Point/Station      418.000
**** INITIAL AREA EVALUATION ****
_____________________________________________________________________
Decimal fraction soil group A = 0.000
Decimal fraction soil group B = 0.000
Decimal fraction soil group C = 0.000
Decimal fraction soil group D = 1.000
[MEDIUM DENSITY RESIDENTIAL                    ]
(7.3 DU/A or Less        )
Impervious value, Ai = 0.400
Sub-Area C Value = 0.570
Initial subarea total flow distance  =  100.000(Ft.)
```

```
Highest elevation =  308.000(Ft.)
Lowest elevation =  307.000(Ft.)
Elevation difference =    1.000(Ft.) Slope =  1.000 %
INITIAL AREA TIME OF CONCENTRATION CALCULATIONS:
The maximum overland flow distance is 65.00 (Ft)
for the top area slope value of   1.00 %, in a development type of
 7.3 DU/A or Less
In Accordance With Table 3-2
Initial Area Time of Concentration =   8.40 minutes
 (for slope value of   1.00 %)
Rainfall intensity (I) =      5.468(In/Hr) for a   100.0 year storm
Effective runoff coefficient used for area (Q=KCIA) is C = 0.570
Subarea runoff =      0.467(CFS)
Total initial stream area =        0.150(Ac.)


++++++++++++++++++++++++++++++++++++++++++++++++++++++++++++++++++++++
Process from Point/Station      418.000 to Point/Station      419.000
**** STREET FLOW TRAVEL TIME + SUBAREA FLOW ADDITION ****
______________________________________________________________________
Top of street segment elevation =   307.000(Ft.)
End of street segment elevation =   303.000(Ft.)
Length of street segment  =   280.000(Ft.)
Height of curb above gutter flowline  =    6.0(In.)
Width of half street (curb to crown)  =  22.000(Ft.)
Distance from crown to crossfall grade break  =  18.000(Ft.)
Slope from gutter to grade break (v/hz) =   0.020
Slope from grade break to crown (v/hz)  =   0.020
Street flow is on [1] side(s) of the street
Distance from curb to property line  =  10.000(Ft.)
Slope from curb to property line (v/hz) =   0.020
Gutter width =   1.500(Ft.)
Gutter hike from flowline =  1.500(In.)
 Manning's N in gutter =  0.0150
 Manning's N from gutter to grade break =  0.0180
 Manning's N from grade break to crown =  0.0180
Estimated mean flow rate at midpoint of street =      2.214(CFS)
Depth of flow =   0.288(Ft.), Average velocity =   2.201(Ft/s)
Streetflow hydraulics at midpoint of street travel:
Halfstreet flow width =   9.669(Ft.)
Flow velocity =   2.20(Ft/s)
Travel time =    2.12 min.     TC =   10.52  min.
 Adding area flow to street
Decimal fraction soil group A = 0.000
Decimal fraction soil group B = 0.000
Decimal fraction soil group C = 0.000
Decimal fraction soil group D = 1.000
[MEDIUM DENSITY RESIDENTIAL                    ]
(7.3 DU/A or Less       )
Impervious value, Ai = 0.400
Sub-Area C Value = 0.570
Rainfall intensity =      4.729(In/Hr) for a   100.0 year storm
Effective runoff coefficient used for total area
(Q=KCIA) is C = 0.570  CA =      0.821
Subarea runoff =      3.414(CFS) for      1.290(Ac.)
Total runoff =      3.882(CFS)  Total area =       1.440(Ac.)
Street flow at end of street =      3.882(CFS)
Half street flow at end of street =      3.882(CFS)
Depth of flow =   0.338(Ft.), Average velocity =   2.509(Ft/s)
Flow width (from curb towards crown)=  12.149(Ft.)
```

```
++++++++++++++++++++++++++++++++++++++++++++++++++++++++++++++++++++++
Process from Point/Station      419.000 to Point/Station      416.000
**** PIPEFLOW TRAVEL TIME (Program estimated size) ****
______________________________________________________________________
Upstream point/station elevation =   303.000(Ft.)
Downstream point/station elevation =   301.000(Ft.)
Pipe length  =   200.00(Ft.)   Manning's N = 0.013
No. of pipes = 1  Required pipe flow  =     3.882(CFS)
Nearest computed pipe diameter  =     15.00(In.)
Calculated individual pipe flow  =     3.882(CFS)
Normal flow depth in pipe =    8.38(In.)
Flow top width inside pipe =   14.90(In.)
Critical Depth =    9.55(In.)
Pipe flow velocity =      5.50(Ft/s)
Travel time through pipe =    0.61 min.
Time of concentration (TC) =    11.13 min.


++++++++++++++++++++++++++++++++++++++++++++++++++++++++++++++++++++++
Process from Point/Station      419.000 to Point/Station      416.000
**** CONFLUENCE OF MINOR STREAMS ****
______________________________________________________________________
Along Main Stream number: 2 in normal stream number 2
Stream flow area =      1.440(Ac.)
Runoff from this stream =      3.882(CFS)
Time of concentration =   11.13 min.
Rainfall intensity =     4.561(In/Hr)
Summary of stream data:

Stream   Flow rate      TC            Rainfall Intensity
 No.       (CFS)       (min)                 (In/Hr)


1       18.812     11.85          4.379
2        3.882     11.13          4.561
Qmax(1) =
         1.000 *    1.000 *    18.812) +
         0.960 *    1.000 *     3.882) + =      22.539
Qmax(2) =
         1.000 *    0.939 *    18.812) +
         1.000 *    1.000 *     3.882) + =      21.542

Total of 2 streams to confluence:
Flow rates before confluence point:
      18.812       3.882
Maximum flow rates at confluence using above data:
       22.539       21.542
Area of streams before confluence:
        7.390        1.440
Results of confluence:
Total flow rate =     22.539(CFS)
Time of concentration =    11.852 min.
Effective stream area after confluence =      8.830(Ac.)


++++++++++++++++++++++++++++++++++++++++++++++++++++++++++++++++++++++
Process from Point/Station      416.000 to Point/Station      420.000
**** PIPEFLOW TRAVEL TIME (Program estimated size) ****
```

```
Upstream point/station elevation =   301.000(Ft.)
Downstream point/station elevation =   289.000(Ft.)
Pipe length  =    45.00(Ft.)   Manning's N = 0.013
No. of pipes = 1  Required pipe flow  =    22.539(CFS)
Nearest computed pipe diameter  =     15.00(In.)
Calculated individual pipe flow  =    22.539(CFS)
Normal flow depth in pipe =    9.04(In.)
Flow top width inside pipe =   14.68(In.)
Critical depth could not be calculated.
Pipe flow velocity =     29.19(Ft/s)
Travel time through pipe =    0.03 min.
Time of concentration (TC) =    11.88 min.


++++++++++++++++++++++++++++++++++++++++++++++++++++++++++++++++++++++
Process from Point/Station      416.000 to Point/Station      420.000
**** SUBAREA FLOW ADDITION ****
______________________________________________________________________
Decimal fraction soil group A = 0.000
Decimal fraction soil group B = 0.000
Decimal fraction soil group C = 0.000
Decimal fraction soil group D = 1.000
[UNDISTURBED NATURAL TERRAIN                    ]
(Permanent Open Space   )
Impervious value, Ai = 0.000
Sub-Area C Value = 0.350
Time of concentration =    11.88 min.
Rainfall intensity =      4.373(In/Hr) for a   100.0 year storm
Effective runoff coefficient used for total area
(Q=KCIA) is C = 0.558  CA =      5.205
Subarea runoff =      0.221(CFS) for      0.490(Ac.)
Total runoff =     22.760(CFS)  Total area =       9.320(Ac.)


++++++++++++++++++++++++++++++++++++++++++++++++++++++++++++++++++++++
Process from Point/Station      420.000 to Point/Station      421.000
**** PIPEFLOW TRAVEL TIME (Program estimated size) ****
______________________________________________________________________
Upstream point/station elevation =   289.000(Ft.)
Downstream point/station elevation =   262.000(Ft.)
Pipe length  =    65.00(Ft.)   Manning's N = 0.013
No. of pipes = 1  Required pipe flow  =    22.760(CFS)
Nearest computed pipe diameter  =     12.00(In.)
Calculated individual pipe flow  =    22.760(CFS)
Normal flow depth in pipe =    9.75(In.)
Flow top width inside pipe =    9.37(In.)
Critical depth could not be calculated.
Pipe flow velocity =     33.33(Ft/s)
Travel time through pipe =    0.03 min.
Time of concentration (TC) =    11.91 min.


++++++++++++++++++++++++++++++++++++++++++++++++++++++++++++++++++++++
Process from Point/Station      421.000 to Point/Station      410.000
**** IMPROVED CHANNEL TRAVEL TIME ****
______________________________________________________________________
Upstream point elevation =   262.000(Ft.)
Downstream point elevation =   259.500(Ft.)
Channel length thru subarea  =    70.000(Ft.)
```

```
Channel base width =    0.500(Ft.)
Slope or 'Z' of left channel bank =   2.000
Slope or 'Z' of right channel bank =   2.000
Manning's 'N'    = 0.018
Maximum depth of channel  =    3.000(Ft.)
Flow(q) thru subarea =     22.760(CFS)
Depth of flow =   0.967(Ft.), Average velocity =   9.669(Ft/s)
Channel flow top width =    4.368(Ft.)
Flow Velocity =    9.67(Ft/s)
Travel time  =    0.12 min.
Time of concentration =   12.03 min.
Critical depth =      1.398(Ft.)


++++++++++++++++++++++++++++++++++++++++++++++++++++++++++++++++++++++
Process from Point/Station      421.000 to Point/Station      410.000
**** CONFLUENCE OF MAIN STREAMS ****
______________________________________________________________________
The following data inside Main Stream is listed:
In Main Stream number: 2
Stream flow area =      9.320(Ac.)
Runoff from this stream =     22.760(CFS)
Time of concentration =   12.03 min.
Rainfall intensity =     4.337(In/Hr)
Summary of stream data:

Stream   Flow rate      TC            Rainfall Intensity
 No.       (CFS)       (min)                 (In/Hr)


1       25.645     13.36          4.053
2       22.760     12.03          4.337
Qmax(1) =
         1.000 *    1.000 *    25.645) +
         0.934 *    1.000 *    22.760) + =      46.913
Qmax(2) =
         1.000 *    0.900 *    25.645) +
         1.000 *    1.000 *    22.760) + =      45.846

Total of 2 main streams to confluence:
Flow rates before confluence point:
      25.645      22.760
Maximum flow rates at confluence using above data:
       46.913       45.846
Area of streams before confluence:
       12.610        9.320


Results of confluence:
Total flow rate =     46.913(CFS)
Time of concentration =    13.364 min.
Effective stream area after confluence  =     21.930(Ac.)


++++++++++++++++++++++++++++++++++++++++++++++++++++++++++++++++++++++
Process from Point/Station      410.000 to Point/Station      422.000
**** IMPROVED CHANNEL TRAVEL TIME ****
______________________________________________________________________
Upstream point elevation =   259.500(Ft.)
Downstream point elevation =   212.000(Ft.)
```

```
Channel length thru subarea  =   909.000(Ft.)
Channel base width =    0.500(Ft.)
Slope or 'Z' of left channel bank =   2.000
Slope or 'Z' of right channel bank =   2.000
Manning's 'N'    = 0.018
Maximum depth of channel  =    1.000(Ft.)
Flow(q) thru subarea =     46.913(CFS)
Depth of flow =   1.173(Ft.), Average velocity =  14.302(Ft/s)
!!Warning: Water is above left or right bank elevations
Channel flow top width =    4.500(Ft.)
Flow Velocity =   14.30(Ft/s)
Travel time  =    1.06 min.
Time of concentration =   14.42 min.
Critical depth =      1.938(Ft.)
ERROR - Channel depth exceeds maximum allowable depth


++++++++++++++++++++++++++++++++++++++++++++++++++++++++++++++++++++++
Process from Point/Station      422.000 to Point/Station      423.000
**** IMPROVED CHANNEL TRAVEL TIME ****
______________________________________________________________________
Upstream point elevation =   212.000(Ft.)
Downstream point elevation =   112.000(Ft.)
Channel length thru subarea  =   240.000(Ft.)
Channel base width =    0.500(Ft.)
Slope or 'Z' of left channel bank =   2.000
Slope or 'Z' of right channel bank =   2.000
Estimated mean flow rate at midpoint of channel =     49.247(CFS)
Manning's 'N'    = 0.018
Maximum depth of channel  =    1.000(Ft.)
Flow(q) thru subarea =     49.247(CFS)
Depth of flow =   0.798(Ft.), Average velocity =  29.457(Ft/s)
Channel flow top width =    3.691(Ft.)
Flow Velocity =   29.46(Ft/s)
Travel time  =    0.14 min.
Time of concentration =   14.56 min.
Critical depth =      2.000(Ft.)
 Adding area flow to channel
Decimal fraction soil group A = 0.000
Decimal fraction soil group B = 0.000
Decimal fraction soil group C = 0.000
Decimal fraction soil group D = 1.000
[UNDISTURBED NATURAL TERRAIN                  ]
(Permanent Open Space   )
Impervious value, Ai = 0.000
Sub-Area C Value = 0.350
Rainfall intensity =      3.835(In/Hr) for a   100.0 year storm
Effective runoff coefficient used for total area
(Q=KCIA) is C = 0.491  CA =     13.436
Subarea runoff =      4.614(CFS) for      5.440(Ac.)
Total runoff =     51.527(CFS)  Total area =      27.370(Ac.)
Depth of flow =   0.813(Ft.), Average velocity =  29.793(Ft/s)
Critical depth =      2.031(Ft.)


++++++++++++++++++++++++++++++++++++++++++++++++++++++++++++++++++++++
Process from Point/Station      423.000 to Point/Station      450.000
**** IMPROVED CHANNEL TRAVEL TIME ****
______________________________________________________________________
Upstream point elevation =   107.500(Ft.)
```

```
Downstream point elevation =   103.900(Ft.)
Channel length thru subarea  =   483.000(Ft.)
Channel base width =    0.000(Ft.)
Slope or 'Z' of left channel bank =   4.000
Slope or 'Z' of right channel bank =   4.000
Manning's 'N'    = 0.030
Maximum depth of channel  =    1.000(Ft.)
Flow(q) thru subarea =     51.527(CFS)
Depth of flow =   1.794(Ft.), Average velocity =   4.977(Ft/s)
!!Warning: Water is above left or right bank elevations
Channel flow top width =    8.000(Ft.)
Flow Velocity =    4.98(Ft/s)
Travel time  =    1.62 min.
Time of concentration =   16.18 min.
Critical depth =      1.594(Ft.)
ERROR - Channel depth exceeds maximum allowable depth


++++++++++++++++++++++++++++++++++++++++++++++++++++++++++++++++++++++
Process from Point/Station      423.000 to Point/Station      450.000
**** CONFLUENCE OF MAIN STREAMS ****
______________________________________________________________________
The following data inside Main Stream is listed:
In Main Stream number: 1
Stream flow area =     27.370(Ac.)
Runoff from this stream =     51.527(CFS)
Time of concentration =   16.18 min.
Rainfall intensity =     3.583(In/Hr)
Program is now starting with Main Stream No. 2


++++++++++++++++++++++++++++++++++++++++++++++++++++++++++++++++++++++
Process from Point/Station      424.000 to Point/Station      425.000
**** INITIAL AREA EVALUATION ****
______________________________________________________________________
Decimal fraction soil group A = 0.000
Decimal fraction soil group B = 0.000
Decimal fraction soil group C = 0.000
Decimal fraction soil group D = 1.000
[UNDISTURBED NATURAL TERRAIN                    ]
(Permanent Open Space   )
Impervious value, Ai = 0.000
Sub-Area C Value = 0.350
Initial subarea total flow distance  =   60.000(Ft.)
Highest elevation =  260.000(Ft.)
Lowest elevation =  230.000(Ft.)
Elevation difference =   30.000(Ft.) Slope = 50.000 %
INITIAL AREA TIME OF CONCENTRATION CALCULATIONS:
The maximum overland flow distance is 100.00 (Ft)
for the top area slope value of  50.00 %, in a development type of
 Permanent Open Space
In Accordance With Figure 3-3
Initial Area Time of Concentration =   3.66 minutes
TC = [1.8*(1.1-C)*distance(Ft.)^.5)/(% slope^(1/3)]
TC = [1.8*(1.1-0.3500)*( 100.000^.5)/(  50.000^(1/3)]=   3.66
Calculated TC of    3.664 minutes is less than 5 minutes,
 resetting TC to 5.0 minutes for rainfall intensity calculations
Rainfall intensity (I) =      7.641(In/Hr) for a   100.0 year storm
Effective runoff coefficient used for area (Q=KCIA) is C = 0.350
Subarea runoff =      0.134(CFS)
```

```
Total initial stream area =        0.050(Ac.)

++++++++++++++++++++++++++++++++++++++++++++++++++++++++++++++++++++++
Process from Point/Station      425.000 to Point/Station      426.000
**** IMPROVED CHANNEL TRAVEL TIME ****
______________________________________________________________________
Upstream point elevation =   230.000(Ft.)
Downstream point elevation =   216.000(Ft.)
Channel length thru subarea  =   300.000(Ft.)
Channel base width =    0.500(Ft.)
Slope or 'Z' of left channel bank =   2.000
Slope or 'Z' of right channel bank =   2.000
Manning's 'N'    = 0.018
Maximum depth of channel  =    3.000(Ft.)
Flow(q) thru subarea =      0.134(CFS)
Depth of flow =   0.076(Ft.), Average velocity =   2.701(Ft/s)
Channel flow top width =    0.804(Ft.)
Flow Velocity =    2.70(Ft/s)
Travel time  =    1.85 min.
Time of concentration =    5.52 min.
Critical depth =      0.111(Ft.)


++++++++++++++++++++++++++++++++++++++++++++++++++++++++++++++++++++++
Process from Point/Station      426.000 to Point/Station      427.000
**** IMPROVED CHANNEL TRAVEL TIME ****
______________________________________________________________________
Upstream point elevation =   216.000(Ft.)
Downstream point elevation =   138.000(Ft.)
Channel length thru subarea  =   188.000(Ft.)
Channel base width =    0.500(Ft.)
Slope or 'Z' of left channel bank =   2.000
Slope or 'Z' of right channel bank =   2.000
Estimated mean flow rate at midpoint of channel =      2.218(CFS)
Manning's 'N'    = 0.018
Maximum depth of channel  =    3.000(Ft.)
Flow(q) thru subarea =      2.218(CFS)
Depth of flow =   0.190(Ft.), Average velocity =  13.228(Ft/s)
Channel flow top width =    1.261(Ft.)
Flow Velocity =   13.23(Ft/s)
Travel time  =    0.24 min.
Time of concentration =    5.75 min.
Critical depth =      0.488(Ft.)
 Adding area flow to channel
Decimal fraction soil group A = 0.000
Decimal fraction soil group B = 0.000
Decimal fraction soil group C = 0.000
Decimal fraction soil group D = 1.000
[UNDISTURBED NATURAL TERRAIN                  ]
(Permanent Open Space   )
Impervious value, Ai = 0.000
Sub-Area C Value = 0.350
Rainfall intensity =      6.980(In/Hr) for a   100.0 year storm
Effective runoff coefficient used for total area
(Q=KCIA) is C = 0.350  CA =      0.609
Subarea runoff =      4.117(CFS) for      1.690(Ac.)
Total runoff =      4.251(CFS)  Total area =       1.740(Ac.)
Depth of flow =   0.263(Ft.), Average velocity =  15.741(Ft/s)
Critical depth =      0.664(Ft.)
```

```
++++++++++++++++++++++++++++++++++++++++++++++++++++++++++++++++++++++
Process from Point/Station      427.000 to Point/Station      428.000
**** IMPROVED CHANNEL TRAVEL TIME ****
______________________________________________________________________
Upstream point elevation =   138.000(Ft.)
Downstream point elevation =   130.500(Ft.)
Channel length thru subarea  =   235.000(Ft.)
Channel base width =    0.000(Ft.)
Slope or 'Z' of left channel bank =   4.000
Slope or 'Z' of right channel bank =   4.000
Manning's 'N'    = 0.030
Maximum depth of channel  =    1.000(Ft.)
Flow(q) thru subarea =      4.251(CFS)
Depth of flow =   0.541(Ft.), Average velocity =   3.628(Ft/s)
Channel flow top width =    4.330(Ft.)
Flow Velocity =    3.63(Ft/s)
Travel time  =    1.08 min.
Time of concentration =    6.83 min.
Critical depth =      0.586(Ft.)


++++++++++++++++++++++++++++++++++++++++++++++++++++++++++++++++++++++
Process from Point/Station      427.000 to Point/Station      428.000
**** CONFLUENCE OF MINOR STREAMS ****
______________________________________________________________________
Along Main Stream number: 2 in normal stream number 1
Stream flow area =      1.740(Ac.)
Runoff from this stream =      4.251(CFS)
Time of concentration =    6.83 min.
Rainfall intensity =     6.247(In/Hr)


++++++++++++++++++++++++++++++++++++++++++++++++++++++++++++++++++++++
Process from Point/Station      429.000 to Point/Station      430.000
**** INITIAL AREA EVALUATION ****
______________________________________________________________________
Decimal fraction soil group A = 0.000
Decimal fraction soil group B = 0.000
Decimal fraction soil group C = 0.000
Decimal fraction soil group D = 1.000
[INDUSTRIAL area type                        ]
(General Industrial       )
Impervious value, Ai = 0.950
Sub-Area C Value = 0.870
Initial subarea total flow distance  =   90.000(Ft.)
Highest elevation =  151.400(Ft.)
Lowest elevation =  150.000(Ft.)
Elevation difference =    1.400(Ft.) Slope =  1.556 %
INITIAL AREA TIME OF CONCENTRATION CALCULATIONS:
The maximum overland flow distance is 70.00 (Ft)
for the top area slope value of   1.56 %, in a development type of
 General Industrial
In Accordance With Figure 3-3
Initial Area Time of Concentration =   2.99 minutes
TC = [1.8*(1.1-C)*distance(Ft.)^.5)/(% slope^(1/3)]
TC = [1.8*(1.1-0.8700)*(  70.000^.5)/(   1.556^(1/3)]=   2.99
Calculated TC of    2.989 minutes is less than 5 minutes,
 resetting TC to 5.0 minutes for rainfall intensity calculations
```

```
Rainfall intensity (I) =      7.641(In/Hr) for a   100.0 year storm
Effective runoff coefficient used for area (Q=KCIA) is C = 0.870
Subarea runoff =      0.598(CFS)
Total initial stream area =        0.090(Ac.)


++++++++++++++++++++++++++++++++++++++++++++++++++++++++++++++++++++++
Process from Point/Station      430.000 to Point/Station      451.000
**** IMPROVED CHANNEL TRAVEL TIME ****
______________________________________________________________________
Upstream point elevation =   150.000(Ft.)
Downstream point elevation =   137.100(Ft.)
Channel length thru subarea  =   330.000(Ft.)
Channel base width =   10.000(Ft.)
Slope or 'Z' of left channel bank =   2.000
Slope or 'Z' of right channel bank =   2.000
Estimated mean flow rate at midpoint of channel =      3.324(CFS)
Manning's 'N'    = 0.018
Maximum depth of channel  =    1.000(Ft.)
Flow(q) thru subarea =      3.324(CFS)
Depth of flow =   0.096(Ft.), Average velocity =   3.380(Ft/s)
Channel flow top width =   10.386(Ft.)
Flow Velocity =    3.38(Ft/s)
Travel time  =    1.63 min.
Time of concentration =    4.62 min.
Critical depth =      0.148(Ft.)
 Adding area flow to channel
Decimal fraction soil group A = 0.000
Decimal fraction soil group B = 0.000
Decimal fraction soil group C = 0.000
Decimal fraction soil group D = 1.000
[INDUSTRIAL area type                        ]
(General Industrial       )
Impervious value, Ai = 0.950
Sub-Area C Value = 0.870
Rainfall intensity =      7.641(In/Hr) for a   100.0 year storm
Effective runoff coefficient used for total area
(Q=KCIA) is C = 0.870  CA =      0.792
Subarea runoff =      5.451(CFS) for      0.820(Ac.)
Total runoff =      6.049(CFS)  Total area =       0.910(Ac.)
Depth of flow =   0.138(Ft.), Average velocity =   4.265(Ft/s)
Critical depth =      0.223(Ft.)


++++++++++++++++++++++++++++++++++++++++++++++++++++++++++++++++++++++
Process from Point/Station      451.000 to Point/Station      428.000
**** IMPROVED CHANNEL TRAVEL TIME ****
______________________________________________________________________
Upstream point elevation =   137.100(Ft.)
Downstream point elevation =   130.500(Ft.)
Channel length thru subarea  =   379.000(Ft.)
Channel base width =    0.000(Ft.)
Slope or 'Z' of left channel bank =   4.000
Slope or 'Z' of right channel bank =   4.000
Estimated mean flow rate at midpoint of channel =      8.735(CFS)
Manning's 'N'    = 0.030
Maximum depth of channel  =    1.000(Ft.)
Flow(q) thru subarea =      8.735(CFS)
Depth of flow =   0.794(Ft.), Average velocity =   3.461(Ft/s)
Channel flow top width =    6.355(Ft.)
```

```
Flow Velocity =    3.46(Ft/s)
Travel time  =    1.83 min.
Time of concentration =    6.44 min.
Critical depth =      0.781(Ft.)
 Adding area flow to channel
Decimal fraction soil group A = 0.000
Decimal fraction soil group B = 0.000
Decimal fraction soil group C = 0.000
Decimal fraction soil group D = 1.000
[UNDISTURBED NATURAL TERRAIN                  ]
(Permanent Open Space   )
Impervious value, Ai = 0.000
Sub-Area C Value = 0.350
Rainfall intensity =      6.489(In/Hr) for a   100.0 year storm
Effective runoff coefficient used for total area
(Q=KCIA) is C = 0.480  CA =      1.751
Subarea runoff =      5.311(CFS) for      2.740(Ac.)
Total runoff =     11.361(CFS)  Total area =       3.650(Ac.)
Depth of flow =   0.877(Ft.), Average velocity =   3.696(Ft/s)
Critical depth =      0.871(Ft.)


++++++++++++++++++++++++++++++++++++++++++++++++++++++++++++++++++++++
Process from Point/Station      451.000 to Point/Station      428.000
**** CONFLUENCE OF MINOR STREAMS ****
______________________________________________________________________
Along Main Stream number: 2 in normal stream number 2
Stream flow area =      3.650(Ac.)
Runoff from this stream =     11.361(CFS)
Time of concentration =    6.44 min.
Rainfall intensity =     6.489(In/Hr)
Summary of stream data:

Stream   Flow rate      TC            Rainfall Intensity
 No.       (CFS)       (min)                 (In/Hr)


1        4.251      6.83          6.247
2       11.361      6.44          6.489
Qmax(1) =
         1.000 *    1.000 *     4.251) +
         0.963 *    1.000 *    11.361) + =      15.188
Qmax(2) =
         1.000 *    0.943 *     4.251) +
         1.000 *    1.000 *    11.361) + =      15.369

Total of 2 streams to confluence:
Flow rates before confluence point:
       4.251      11.361
Maximum flow rates at confluence using above data:
       15.188       15.369
Area of streams before confluence:
        1.740        3.650
Results of confluence:
Total flow rate =     15.369(CFS)
Time of concentration =     6.441 min.
Effective stream area after confluence =      5.390(Ac.)


++++++++++++++++++++++++++++++++++++++++++++++++++++++++++++++++++++++
```

```
Process from Point/Station      428.000 to Point/Station      431.000
**** IMPROVED CHANNEL TRAVEL TIME ****
_____________________________________________________________________
Upstream point elevation =   131.800(Ft.)
Downstream point elevation =   110.200(Ft.)
Channel length thru subarea  =   135.000(Ft.)
Channel base width =   10.000(Ft.)
Slope or 'Z' of left channel bank =   2.000
Slope or 'Z' of right channel bank =   2.000
Manning's 'N'    = 0.018
Maximum depth of channel  =    1.000(Ft.)
Flow(q) thru subarea =     15.369(CFS)
Depth of flow =   0.158(Ft.), Average velocity =   9.420(Ft/s)
Channel flow top width =   10.633(Ft.)
Flow Velocity =    9.42(Ft/s)
Travel time  =    0.24 min.
Time of concentration =    6.68 min.
Critical depth =      0.406(Ft.)


++++++++++++++++++++++++++++++++++++++++++++++++++++++++++++++++++++++
Process from Point/Station      431.000 to Point/Station      432.000
**** IMPROVED CHANNEL TRAVEL TIME ****
_____________________________________________________________________
Upstream point elevation =   110.200(Ft.)
Downstream point elevation =   104.200(Ft.)
Channel length thru subarea  =   552.000(Ft.)
Channel base width =    0.000(Ft.)
Slope or 'Z' of left channel bank =   4.000
Slope or 'Z' of right channel bank =   4.000
Estimated mean flow rate at midpoint of channel =     19.360(CFS)
Manning's 'N'    = 0.030
Maximum depth of channel  =    2.000(Ft.)
Flow(q) thru subarea =     19.360(CFS)
Depth of flow =   1.169(Ft.), Average velocity =   3.539(Ft/s)
Channel flow top width =    9.356(Ft.)
Flow Velocity =    3.54(Ft/s)
Travel time  =    2.60 min.
Time of concentration =    9.28 min.
Critical depth =      1.078(Ft.)
 Adding area flow to channel
Decimal fraction soil group A = 0.000
Decimal fraction soil group B = 0.000
Decimal fraction soil group C = 0.000
Decimal fraction soil group D = 1.000
[UNDISTURBED NATURAL TERRAIN                  ]
(Permanent Open Space   )
Impervious value, Ai = 0.000
Sub-Area C Value = 0.350
Rainfall intensity =      5.128(In/Hr) for a   100.0 year storm
Effective runoff coefficient used for total area
(Q=KCIA) is C = 0.391  CA =      4.537
Subarea runoff =      7.894(CFS) for      6.220(Ac.)
Total runoff =     23.262(CFS)  Total area =      11.610(Ac.)
Depth of flow =   1.253(Ft.), Average velocity =   3.705(Ft/s)
Critical depth =      1.156(Ft.)


++++++++++++++++++++++++++++++++++++++++++++++++++++++++++++++++++++++
Process from Point/Station      432.000 to Point/Station      450.000
```

```
**** IMPROVED CHANNEL TRAVEL TIME ****
_____________________________________________________________________
Upstream point elevation =   104.200(Ft.)
Downstream point elevation =   103.000(Ft.)
Channel length thru subarea  =   239.000(Ft.)
Channel base width =    0.000(Ft.)
Slope or 'Z' of left channel bank =   4.000
Slope or 'Z' of right channel bank =   4.000
Manning's 'N'    = 0.030
Maximum depth of channel  =    3.000(Ft.)
Flow(q) thru subarea =     23.262(CFS)
Depth of flow =   1.448(Ft.), Average velocity =   2.773(Ft/s)
Channel flow top width =   11.585(Ft.)
Flow Velocity =    2.77(Ft/s)
Travel time  =    1.44 min.
Time of concentration =   10.72 min.
Critical depth =      1.156(Ft.)


++++++++++++++++++++++++++++++++++++++++++++++++++++++++++++++++++++++
Process from Point/Station      432.000 to Point/Station      450.000
**** CONFLUENCE OF MAIN STREAMS ****
_____________________________________________________________________
The following data inside Main Stream is listed:
In Main Stream number: 2
Stream flow area =     11.610(Ac.)
Runoff from this stream =     23.262(CFS)
Time of concentration =   10.72 min.
Rainfall intensity =     4.673(In/Hr)
Program is now starting with Main Stream No. 3


++++++++++++++++++++++++++++++++++++++++++++++++++++++++++++++++++++++
Process from Point/Station      433.000 to Point/Station      434.000
**** INITIAL AREA EVALUATION ****
_____________________________________________________________________
Decimal fraction soil group A = 0.000
Decimal fraction soil group B = 0.000
Decimal fraction soil group C = 0.000
Decimal fraction soil group D = 1.000
[UNDISTURBED NATURAL TERRAIN                    ]
(Permanent Open Space   )
Impervious value, Ai = 0.000
Sub-Area C Value = 0.350
Initial subarea total flow distance  =   63.000(Ft.)
Highest elevation =  196.000(Ft.)
Lowest elevation =  166.000(Ft.)
Elevation difference =   30.000(Ft.) Slope = 47.619 %
INITIAL AREA TIME OF CONCENTRATION CALCULATIONS:
The maximum overland flow distance is 100.00 (Ft)
for the top area slope value of  47.62 %, in a development type of
 Permanent Open Space
In Accordance With Figure 3-3
Initial Area Time of Concentration =   3.72 minutes
TC = [1.8*(1.1-C)*distance(Ft.)^.5)/(% slope^(1/3)]
TC = [1.8*(1.1-0.3500)*( 100.000^.5)/(  47.619^(1/3)]=   3.72
Calculated TC of    3.725 minutes is less than 5 minutes,
 resetting TC to 5.0 minutes for rainfall intensity calculations
Rainfall intensity (I) =      7.641(In/Hr) for a   100.0 year storm
Effective runoff coefficient used for area (Q=KCIA) is C = 0.350
```

```
Subarea runoff =      0.053(CFS)
Total initial stream area =        0.020(Ac.)


++++++++++++++++++++++++++++++++++++++++++++++++++++++++++++++++++++++
Process from Point/Station      434.000 to Point/Station      435.000
**** IMPROVED CHANNEL TRAVEL TIME ****
______________________________________________________________________
Upstream point elevation =   166.000(Ft.)
Downstream point elevation =   151.800(Ft.)
Channel length thru subarea  =   269.000(Ft.)
Channel base width =    0.500(Ft.)
Slope or 'Z' of left channel bank =   2.000
Slope or 'Z' of right channel bank =   2.000
Manning's 'N'    = 0.018
Maximum depth of channel  =    1.000(Ft.)
Flow(q) thru subarea =      0.053(CFS)
Depth of flow =   0.043(Ft.), Average velocity =   2.096(Ft/s)
Channel flow top width =    0.674(Ft.)
Flow Velocity =    2.10(Ft/s)
Travel time  =    2.14 min.
Time of concentration =    5.86 min.
Critical depth =      0.064(Ft.)


++++++++++++++++++++++++++++++++++++++++++++++++++++++++++++++++++++++
Process from Point/Station      435.000 to Point/Station      436.000
**** IMPROVED CHANNEL TRAVEL TIME ****
______________________________________________________________________
Upstream point elevation =   151.800(Ft.)
Downstream point elevation =   107.000(Ft.)
Channel length thru subarea  =   110.000(Ft.)
Channel base width =    0.500(Ft.)
Slope or 'Z' of left channel bank =   2.000
Slope or 'Z' of right channel bank =   2.000
Estimated mean flow rate at midpoint of channel =      1.066(CFS)
Manning's 'N'    = 0.018
Maximum depth of channel  =    1.000(Ft.)
Flow(q) thru subarea =      1.066(CFS)
Depth of flow =   0.131(Ft.), Average velocity =  10.717(Ft/s)
Channel flow top width =    1.023(Ft.)
Flow Velocity =   10.72(Ft/s)
Travel time  =    0.17 min.
Time of concentration =    6.03 min.
Critical depth =      0.340(Ft.)
 Adding area flow to channel
Decimal fraction soil group A = 0.000
Decimal fraction soil group B = 0.000
Decimal fraction soil group C = 0.000
Decimal fraction soil group D = 1.000
[UNDISTURBED NATURAL TERRAIN                  ]
(Permanent Open Space   )
Impervious value, Ai = 0.000
Sub-Area C Value = 0.350
Rainfall intensity =      6.768(In/Hr) for a   100.0 year storm
Effective runoff coefficient used for total area
(Q=KCIA) is C = 0.350  CA =      0.297
Subarea runoff =      1.960(CFS) for      0.830(Ac.)
Total runoff =      2.013(CFS)  Total area =      0.850(Ac.)
Depth of flow =   0.182(Ft.), Average velocity =  12.797(Ft/s)
```

```
Critical depth =      0.465(Ft.)

++++++++++++++++++++++++++++++++++++++++++++++++++++++++++++++++++++++
Process from Point/Station      436.000 to Point/Station      450.000
**** IMPROVED CHANNEL TRAVEL TIME ****
______________________________________________________________________
Upstream point elevation =   106.000(Ft.)
Downstream point elevation =   103.900(Ft.)
Channel length thru subarea  =   210.000(Ft.)
Channel base width =    0.000(Ft.)
Slope or 'Z' of left channel bank =   4.000
Slope or 'Z' of right channel bank =   4.000
Manning's 'N'    = 0.030
Maximum depth of channel  =    1.000(Ft.)
Flow(q) thru subarea =      2.013(CFS)
Depth of flow =   0.508(Ft.), Average velocity =   1.948(Ft/s)
Channel flow top width =    4.067(Ft.)
Flow Velocity =    1.95(Ft/s)
Travel time  =    1.80 min.
Time of concentration =    7.83 min.
Critical depth =      0.438(Ft.)


++++++++++++++++++++++++++++++++++++++++++++++++++++++++++++++++++++++
Process from Point/Station      436.000 to Point/Station      450.000
**** CONFLUENCE OF MAIN STREAMS ****
______________________________________________________________________
The following data inside Main Stream is listed:
In Main Stream number: 3
Stream flow area =      0.850(Ac.)
Runoff from this stream =      2.013(CFS)
Time of concentration =    7.83 min.
Rainfall intensity =     5.721(In/Hr)
Program is now starting with Main Stream No. 4


++++++++++++++++++++++++++++++++++++++++++++++++++++++++++++++++++++++
Process from Point/Station      437.000 to Point/Station      438.000
**** INITIAL AREA EVALUATION ****
______________________________________________________________________
Decimal fraction soil group A = 0.000
Decimal fraction soil group B = 0.000
Decimal fraction soil group C = 0.000
Decimal fraction soil group D = 1.000
[UNDISTURBED NATURAL TERRAIN                  ]
(Permanent Open Space   )
Impervious value, Ai = 0.000
Sub-Area C Value = 0.350
Initial subarea total flow distance  =   98.000(Ft.)
Highest elevation =  213.000(Ft.)
Lowest elevation =  206.000(Ft.)
Elevation difference =    7.000(Ft.) Slope =  7.143 %
INITIAL AREA TIME OF CONCENTRATION CALCULATIONS:
The maximum overland flow distance is 100.00 (Ft)
for the top area slope value of   7.14 %, in a development type of
 Permanent Open Space
In Accordance With Figure 3-3
Initial Area Time of Concentration =   7.01 minutes
TC = [1.8*(1.1-C)*distance(Ft.)^.5)/(% slope^(1/3)]
```

```
TC = [1.8*(1.1-0.3500)*( 100.000^.5)/(   7.143^(1/3)]=   7.01
Rainfall intensity (I) =      6.145(In/Hr) for a   100.0 year storm
Effective runoff coefficient used for area (Q=KCIA) is C = 0.350
Subarea runoff =      0.043(CFS)
Total initial stream area =        0.020(Ac.)


++++++++++++++++++++++++++++++++++++++++++++++++++++++++++++++++++++++
Process from Point/Station      438.000 to Point/Station      439.000
**** IMPROVED CHANNEL TRAVEL TIME ****
______________________________________________________________________
Upstream point elevation =   206.000(Ft.)
Downstream point elevation =   130.000(Ft.)
Channel length thru subarea  =   417.000(Ft.)
Channel base width =    0.500(Ft.)
Slope or 'Z' of left channel bank =   2.000
Slope or 'Z' of right channel bank =   2.000
Manning's 'N'    = 0.018
Maximum depth of channel  =    1.000(Ft.)
Flow(q) thru subarea =      0.043(CFS)
Depth of flow =   0.027(Ft.), Average velocity =   2.917(Ft/s)
Channel flow top width =    0.607(Ft.)
Flow Velocity =    2.92(Ft/s)
Travel time  =    2.38 min.
Time of concentration =    9.39 min.
Critical depth =      0.057(Ft.)


++++++++++++++++++++++++++++++++++++++++++++++++++++++++++++++++++++++
Process from Point/Station      439.000 to Point/Station      440.000
**** IMPROVED CHANNEL TRAVEL TIME ****
______________________________________________________________________
Upstream point elevation =   130.000(Ft.)
Downstream point elevation =   110.000(Ft.)
Channel length thru subarea  =    50.000(Ft.)
Channel base width =    0.500(Ft.)
Slope or 'Z' of left channel bank =   2.000
Slope or 'Z' of right channel bank =   2.000
Manning's 'N'    = 0.018
Maximum depth of channel  =    1.000(Ft.)
Flow(q) thru subarea =      0.043(CFS)
Depth of flow =   0.021(Ft.), Average velocity =   3.753(Ft/s)
Channel flow top width =    0.585(Ft.)
Flow Velocity =    3.75(Ft/s)
Travel time  =    0.22 min.
Time of concentration =    9.61 min.
Critical depth =      0.057(Ft.)


++++++++++++++++++++++++++++++++++++++++++++++++++++++++++++++++++++++
Process from Point/Station      440.000 to Point/Station      441.000
**** IMPROVED CHANNEL TRAVEL TIME ****
______________________________________________________________________
Upstream point elevation =   110.000(Ft.)
Downstream point elevation =   106.000(Ft.)
Channel length thru subarea  =    62.000(Ft.)
Channel base width =    0.500(Ft.)
Slope or 'Z' of left channel bank =   2.000
Slope or 'Z' of right channel bank =   2.000
Estimated mean flow rate at midpoint of channel =      0.774(CFS)
```

```
Manning's 'N'    = 0.018
Maximum depth of channel  =    1.000(Ft.)
Flow(q) thru subarea =      0.774(CFS)
Depth of flow =   0.179(Ft.), Average velocity =   5.046(Ft/s)
Channel flow top width =    1.216(Ft.)
Flow Velocity =    5.05(Ft/s)
Travel time  =    0.20 min.
Time of concentration =    9.82 min.
Critical depth =      0.289(Ft.)
 Adding area flow to channel
Decimal fraction soil group A = 0.000
Decimal fraction soil group B = 0.000
Decimal fraction soil group C = 0.000
Decimal fraction soil group D = 1.000
[UNDISTURBED NATURAL TERRAIN                    ]
(Permanent Open Space   )
Impervious value, Ai = 0.000
Sub-Area C Value = 0.350
Rainfall intensity =      4.944(In/Hr) for a   100.0 year storm
Effective runoff coefficient used for total area
(Q=KCIA) is C = 0.350  CA =      0.287
Subarea runoff =      1.376(CFS) for      0.800(Ac.)
Total runoff =      1.419(CFS)  Total area =       0.820(Ac.)
Depth of flow =   0.243(Ft.), Average velocity =   5.940(Ft/s)
Critical depth =      0.395(Ft.)


++++++++++++++++++++++++++++++++++++++++++++++++++++++++++++++++++++++
Process from Point/Station      441.000 to Point/Station      450.000
**** IMPROVED CHANNEL TRAVEL TIME ****
______________________________________________________________________
Upstream point elevation =   107.300(Ft.)
Downstream point elevation =   103.900(Ft.)
Channel length thru subarea  =   348.000(Ft.)
Channel base width =    0.000(Ft.)
Slope or 'Z' of left channel bank =   4.000
Slope or 'Z' of right channel bank =   4.000
Manning's 'N'    = 0.030
Maximum depth of channel  =    1.000(Ft.)
Flow(q) thru subarea =      1.419(CFS)
Depth of flow =   0.448(Ft.), Average velocity =   1.769(Ft/s)
Channel flow top width =    3.582(Ft.)
Flow Velocity =    1.77(Ft/s)
Travel time  =    3.28 min.
Time of concentration =   13.10 min.
Critical depth =      0.379(Ft.)


++++++++++++++++++++++++++++++++++++++++++++++++++++++++++++++++++++++
Process from Point/Station      441.000 to Point/Station      450.000
**** CONFLUENCE OF MAIN STREAMS ****
______________________________________________________________________
The following data inside Main Stream is listed:
In Main Stream number: 4
Stream flow area =      0.820(Ac.)
Runoff from this stream =      1.419(CFS)
Time of concentration =   13.10 min.
Rainfall intensity =     4.106(In/Hr)
Program is now starting with Main Stream No. 5
```

```
++++++++++++++++++++++++++++++++++++++++++++++++++++++++++++++++++++++
Process from Point/Station      442.000 to Point/Station      443.000
**** INITIAL AREA EVALUATION ****
______________________________________________________________________
Decimal fraction soil group A = 0.000
Decimal fraction soil group B = 0.000
Decimal fraction soil group C = 0.000
Decimal fraction soil group D = 1.000
[UNDISTURBED NATURAL TERRAIN                    ]
(Permanent Open Space   )
Impervious value, Ai = 0.000
Sub-Area C Value = 0.350
Initial subarea total flow distance  =  120.000(Ft.)
Highest elevation =  329.000(Ft.)
Lowest elevation =  323.000(Ft.)
Elevation difference =    6.000(Ft.) Slope =  5.000 %
INITIAL AREA TIME OF CONCENTRATION CALCULATIONS:
The maximum overland flow distance is 100.00 (Ft)
for the top area slope value of   5.00 %, in a development type of
 Permanent Open Space
In Accordance With Figure 3-3
Initial Area Time of Concentration =   7.89 minutes
TC = [1.8*(1.1-C)*distance(Ft.)^.5)/(% slope^(1/3)]
TC = [1.8*(1.1-0.3500)*( 100.000^.5)/(   5.000^(1/3)]=   7.89
The initial area total distance of  120.00 (Ft.) entered leaves a
remaining distance of   20.00 (Ft.)
Using Figure 3-4, the travel time for this distance is   0.25 minutes
for a distance of  20.00 (Ft.) and a slope of  5.00 %
with an elevation difference of   1.00(Ft.) from the end of the top area
Tt = [11.9*length(Mi)^3)/(elevation change(Ft.))]^.385 *60(min/hr)
 =    0.248 Minutes
Tt=[(11.9*0.0038^3)/(  1.00)]^.385=  0.25
Total initial area Ti =   7.89 minutes from Figure 3-3 formula plus
  0.25 minutes from the Figure 3-4 formula =   8.14 minutes
Rainfall intensity (I) =      5.578(In/Hr) for a   100.0 year storm
Effective runoff coefficient used for area (Q=KCIA) is C = 0.350
Subarea runoff =      0.234(CFS)
Total initial stream area =        0.120(Ac.)


++++++++++++++++++++++++++++++++++++++++++++++++++++++++++++++++++++++
Process from Point/Station      443.000 to Point/Station      444.000
**** IMPROVED CHANNEL TRAVEL TIME ****
______________________________________________________________________
Upstream point elevation =   323.000(Ft.)
Downstream point elevation =   109.000(Ft.)
Channel length thru subarea  =   805.000(Ft.)
Channel base width =   10.000(Ft.)
Slope or 'Z' of left channel bank =   2.000
Slope or 'Z' of right channel bank =   2.000
Estimated mean flow rate at midpoint of channel =      5.872(CFS)
Manning's 'N'    = 0.018
Maximum depth of channel  =    1.000(Ft.)
Flow(q) thru subarea =      5.872(CFS)
Depth of flow =   0.076(Ft.), Average velocity =   7.570(Ft/s)
Channel flow top width =   10.306(Ft.)
Flow Velocity =    7.57(Ft/s)
Travel time  =    1.77 min.
Time of concentration =    9.92 min.
```

```
Critical depth =      0.217(Ft.)
 Adding area flow to channel
Decimal fraction soil group A = 0.000
Decimal fraction soil group B = 0.000
Decimal fraction soil group C = 0.000
Decimal fraction soil group D = 1.000
[UNDISTURBED NATURAL TERRAIN                    ]
(Permanent Open Space   )
Impervious value, Ai = 0.000
Sub-Area C Value = 0.350
Rainfall intensity =      4.913(In/Hr) for a   100.0 year storm
Effective runoff coefficient used for total area
(Q=KCIA) is C = 0.350  CA =      2.331
Subarea runoff =     11.218(CFS) for      6.540(Ac.)
Total runoff =     11.452(CFS)  Total area =       6.660(Ac.)
Depth of flow =   0.114(Ft.), Average velocity =   9.825(Ft/s)
Critical depth =      0.336(Ft.)


++++++++++++++++++++++++++++++++++++++++++++++++++++++++++++++++++++++
Process from Point/Station      444.000 to Point/Station      450.000
**** IMPROVED CHANNEL TRAVEL TIME ****
______________________________________________________________________
Upstream point elevation =   108.000(Ft.)
Downstream point elevation =   103.900(Ft.)
Channel length thru subarea  =   791.000(Ft.)
Channel base width =    0.000(Ft.)
Slope or 'Z' of left channel bank =   4.000
Slope or 'Z' of right channel bank =   4.000
Manning's 'N'    = 0.030
Maximum depth of channel  =    1.000(Ft.)
Flow(q) thru subarea =     11.452(CFS)
Depth of flow =   1.085(Ft.), Average velocity =   2.446(Ft/s)
!!Warning: Water is above left or right bank elevations
Channel flow top width =    8.000(Ft.)
Flow Velocity =    2.45(Ft/s)
Travel time  =    5.39 min.
Time of concentration =   15.31 min.
Critical depth =      0.875(Ft.)
ERROR - Channel depth exceeds maximum allowable depth


++++++++++++++++++++++++++++++++++++++++++++++++++++++++++++++++++++++
Process from Point/Station      444.000 to Point/Station      450.000
**** CONFLUENCE OF MAIN STREAMS ****
______________________________________________________________________
The following data inside Main Stream is listed:
In Main Stream number: 5
Stream flow area =      6.660(Ac.)
Runoff from this stream =     11.452(CFS)
Time of concentration =   15.31 min.
Rainfall intensity =     3.713(In/Hr)
Summary of stream data:

Stream   Flow rate      TC            Rainfall Intensity
 No.       (CFS)       (min)                 (In/Hr)


1       51.527     16.18          3.583
2       23.262     10.72          4.673
```

```
3        2.013      7.83          5.721
4        1.419     13.10          4.106
5       11.452     15.31          3.713
Qmax(1) =
          1.000 *    1.000 *    51.527) +
          0.767 *    1.000 *    23.262) +
          0.626 *    1.000 *     2.013) +
          0.873 *    1.000 *     1.419) +
          0.965 *    1.000 *    11.452) + =      82.913
Qmax(2) =
          1.000 *    0.662 *    51.527) +
          1.000 *    1.000 *    23.262) +
          0.817 *    1.000 *     2.013) +
          1.000 *    0.818 *     1.419) +
          1.000 *    0.700 *    11.452) + =      68.219
Qmax(3) =
          1.000 *    0.484 *    51.527) +
          1.000 *    0.731 *    23.262) +
          1.000 *    1.000 *     2.013) +
          1.000 *    0.598 *     1.419) +
          1.000 *    0.512 *    11.452) + =      50.666
Qmax(4) =
          1.000 *    0.810 *    51.527) +
          0.879 *    1.000 *    23.262) +
          0.718 *    1.000 *     2.013) +
          1.000 *    1.000 *     1.419) +
          1.000 *    0.856 *    11.452) + =      74.821
Qmax(5) =
          1.000 *    0.946 *    51.527) +
          0.795 *    1.000 *    23.262) +
          0.649 *    1.000 *     2.013) +
          0.904 *    1.000 *     1.419) +
          1.000 *    1.000 *    11.452) + =      81.281

Total of 5 main streams to confluence:
Flow rates before confluence point:
      51.527      23.262       2.013       1.419      11.452
Maximum flow rates at confluence using above data:
       82.913       68.219       50.666       74.821       81.281
Area of streams before confluence:
       27.370       11.610        0.850        0.820        6.660


Results of confluence:
Total flow rate =     82.913(CFS)
Time of concentration =    16.177 min.
Effective stream area after confluence  =     47.310(Ac.)


++++++++++++++++++++++++++++++++++++++++++++++++++++++++++++++++++++++
Process from Point/Station      450.000 to Point/Station      450.000
**** SUBAREA FLOW ADDITION ****
______________________________________________________________________
Decimal fraction soil group A = 0.000
Decimal fraction soil group B = 0.000
Decimal fraction soil group C = 0.000
Decimal fraction soil group D = 1.000
[UNDISTURBED NATURAL TERRAIN                    ]
(Permanent Open Space   )
Impervious value, Ai = 0.000
```

```
Sub-Area C Value = 0.350
Time of concentration =    16.18 min.
Rainfall intensity =      3.583(In/Hr) for a   100.0 year storm
Effective runoff coefficient used for total area
(Q=KCIA) is C = 0.428  CA =     23.640
Subarea runoff =      1.787(CFS) for      7.860(Ac.)
Total runoff =     84.699(CFS)  Total area =      55.170(Ac.)
End of computations, total study area =          55.170 (Ac.)
```

San Diego County Rational Hydrology Program

CIVILCADD/CIVILDESIGN Engineering Software,(c)1991-2004 Version 7.4

Rational method hydrology program based on
San Diego County Flood Control Division 2003 hydrology manual
Rational Hydrology Study Date: 10/02/12

---

2468 QUARRY CREEK
EXISTING CONDITIONS
SYSTEM 500
FILE: S500E100

---

********* Hydrology Study Control Information **********

---

Program License Serial Number 4049

---

Rational hydrology study storm event year is 100.0
English (in-lb) input data Units used

Map data precipitation entered:
6 hour, precipitation(inches) = 2.900
24 hour precipitation(inches) = 5.100
P6/P24 = 56.9%
San Diego hydrology manual 'C' values used

++++++++++++++++++++++++++++++++++++++++++++++++++++++++++++++++++++++
Process from Point/Station 500.000 to Point/Station 510.000
**** INITIAL AREA EVALUATION ****

---

Decimal fraction soil group A = 0.000
Decimal fraction soil group B = 0.000
Decimal fraction soil group C = 0.000
Decimal fraction soil group D = 1.000
[UNDISTURBED NATURAL TERRAIN ]
(Permanent Open Space )
Impervious value, Ai = 0.000
Sub-Area C Value = 0.350
Initial subarea total flow distance = 88.000(Ft.)
Highest elevation = 149.800(Ft.)
Lowest elevation = 140.000(Ft.)
Elevation difference = 9.800(Ft.) Slope = 11.136 %
INITIAL AREA TIME OF CONCENTRATION CALCULATIONS:
The maximum overland flow distance is 100.00 (Ft)
for the top area slope value of 11.14 %, in a development type of
Permanent Open Space
In Accordance With Figure 3-3
Initial Area Time of Concentration = 6.05 minutes
TC = [1.8*(1.1-C)*distance(Ft.)^.5)/(% slope^(1/3)]
TC = [1.8*(1.1-0.3500)*( 100.000^.5)/( 11.136^(1/3)]= 6.05
Rainfall intensity (I) = 6.760(In/Hr) for a 100.0 year storm
Effective runoff coefficient used for area (Q=KCIA) is C = 0.350
Subarea runoff = 0.710(CFS)
Total initial stream area = 0.300(Ac.)

```
++++++++++++++++++++++++++++++++++++++++++++++++++++++++++++++++++++++
Process from Point/Station      510.000 to Point/Station      550.000
**** IMPROVED CHANNEL TRAVEL TIME ****
______________________________________________________________________
Upstream point elevation =   140.000(Ft.)
Downstream point elevation =    96.000(Ft.)
Channel length thru subarea  =   613.000(Ft.)
Channel base width =    5.000(Ft.)
Slope or 'Z' of left channel bank =   3.000
Slope or 'Z' of right channel bank =   3.000
Estimated mean flow rate at midpoint of channel =      7.956(CFS)
Manning's 'N'    = 0.050
Maximum depth of channel  =    2.000(Ft.)
Flow(q) thru subarea =      7.956(CFS)
Depth of flow =   0.363(Ft.), Average velocity =   3.594(Ft/s)
Channel flow top width =    7.181(Ft.)
Flow Velocity =    3.59(Ft/s)
Travel time  =    2.84 min.
Time of concentration =    8.89 min.
Critical depth =      0.395(Ft.)
 Adding area flow to channel
Decimal fraction soil group A = 0.000
Decimal fraction soil group B = 0.000
Decimal fraction soil group C = 0.000
Decimal fraction soil group D = 1.000
[UNDISTURBED NATURAL TERRAIN                  ]
(Permanent Open Space   )
Impervious value, Ai = 0.000
Sub-Area C Value = 0.350
Rainfall intensity =      5.272(In/Hr) for a   100.0 year storm
Effective runoff coefficient used for total area
(Q=KCIA) is C = 0.350  CA =      2.866
Subarea runoff =     14.403(CFS) for      7.890(Ac.)
Total runoff =     15.113(CFS)  Total area =       8.190(Ac.)
Depth of flow =   0.522(Ft.), Average velocity =   4.413(Ft/s)
Critical depth =      0.578(Ft.)


++++++++++++++++++++++++++++++++++++++++++++++++++++++++++++++++++++++
Process from Point/Station      540.000 to Point/Station      550.000
**** SUBAREA FLOW ADDITION ****
______________________________________________________________________
Decimal fraction soil group A = 0.000
Decimal fraction soil group B = 0.000
Decimal fraction soil group C = 0.000
Decimal fraction soil group D = 1.000
[UNDISTURBED NATURAL TERRAIN                  ]
(Permanent Open Space   )
Impervious value, Ai = 0.000
Sub-Area C Value = 0.350
Time of concentration =     8.89 min.
Rainfall intensity =      5.272(In/Hr) for a   100.0 year storm
Effective runoff coefficient used for total area
(Q=KCIA) is C = 0.350  CA =      4.879
Subarea runoff =     10.610(CFS) for      5.750(Ac.)
Total runoff =     25.723(CFS)  Total area =      13.940(Ac.)
End of computations, total study area =          13.940 (Ac.)
```

```
                San Diego County Rational Hydrology Program

CIVILCADD/CIVILDESIGN Engineering Software,(c)1991-2004 Version 7.4

Rational method hydrology  program based on
San Diego County Flood Control Division 2003 hydrology manual
      Rational Hydrology Study        Date: 10/02/12
----------------------------------------------------------------------
2468 QUARRY CREEK
EXISTING CONDITIONS
SYSTEM 600 FILE: S600E100

----------------------------------------------------------------------
 *********   Hydrology Study Control Information **********

----------------------------------------------------------------------


Program License Serial Number 4049

----------------------------------------------------------------------
Rational hydrology study storm event year is   100.0
English (in-lb) input data Units used

Map data precipitation entered:
6 hour,  precipitation(inches) =  2.900
24 hour precipitation(inches) =  5.100
P6/P24 =    56.9%
San Diego hydrology manual 'C' values used


++++++++++++++++++++++++++++++++++++++++++++++++++++++++++++++++++++++
Process from Point/Station      600.000 to Point/Station      601.000
**** INITIAL AREA EVALUATION ****
______________________________________________________________________
Decimal fraction soil group A = 0.000
Decimal fraction soil group B = 0.000
Decimal fraction soil group C = 0.000
Decimal fraction soil group D = 1.000
[INDUSTRIAL area type                        ]
(General Industrial       )
Impervious value, Ai = 0.950
Sub-Area C Value = 0.870
Initial subarea total flow distance  =  100.000(Ft.)
Highest elevation =  451.000(Ft.)
Lowest elevation =  446.000(Ft.)
Elevation difference =    5.000(Ft.) Slope =  5.000 %
INITIAL AREA TIME OF CONCENTRATION CALCULATIONS:
The maximum overland flow distance is 90.00 (Ft)
for the top area slope value of   5.00 %, in a development type of
 General Industrial
In Accordance With Table 3-2
Initial Area Time of Concentration =   2.30 minutes
 (for slope value of   5.00 %)
Calculated TC of    2.300 minutes is less than 5 minutes,
 resetting TC to 5.0 minutes for rainfall intensity calculations
Rainfall intensity (I) =      7.641(In/Hr) for a   100.0 year storm
Effective runoff coefficient used for area (Q=KCIA) is C = 0.870
Subarea runoff =      2.792(CFS)
```

```
Total initial stream area =        0.420(Ac.)

++++++++++++++++++++++++++++++++++++++++++++++++++++++++++++++++++++++
Process from Point/Station      601.000 to Point/Station      602.000
**** STREET FLOW TRAVEL TIME + SUBAREA FLOW ADDITION ****
______________________________________________________________________
Top of street segment elevation =   446.000(Ft.)
End of street segment elevation =   411.000(Ft.)
Length of street segment  =   625.000(Ft.)
Height of curb above gutter flowline  =    6.0(In.)
Width of half street (curb to crown)  =  22.000(Ft.)
Distance from crown to crossfall grade break  =  18.000(Ft.)
Slope from gutter to grade break (v/hz) =   0.020
Slope from grade break to crown (v/hz)  =   0.020
Street flow is on [1] side(s) of the street
Distance from curb to property line  =  10.000(Ft.)
Slope from curb to property line (v/hz) =   0.020
Gutter width =   1.500(Ft.)
Gutter hike from flowline =  1.500(In.)
 Manning's N in gutter =  0.0150
 Manning's N from gutter to grade break =  0.0180
 Manning's N from grade break to crown =  0.0180
Estimated mean flow rate at midpoint of street =     12.129(CFS)
Depth of flow =   0.386(Ft.), Average velocity =   5.537(Ft/s)
Streetflow hydraulics at midpoint of street travel:
Halfstreet flow width =  14.557(Ft.)
Flow velocity =   5.54(Ft/s)
Travel time =    1.88 min.     TC =    4.18  min.
 Adding area flow to street
Decimal fraction soil group A = 0.000
Decimal fraction soil group B = 0.000
Decimal fraction soil group C = 0.000
Decimal fraction soil group D = 1.000
[MEDIUM DENSITY RESIDENTIAL                    ]
(7.3 DU/A or Less       )
Impervious value, Ai = 0.400
Sub-Area C Value = 0.570
Rainfall intensity =      7.641(In/Hr) for a   100.0 year storm
Effective runoff coefficient used for total area
(Q=KCIA) is C = 0.597  CA =      2.799
Subarea runoff =     18.597(CFS) for      4.270(Ac.)
Total runoff =     21.389(CFS)  Total area =       4.690(Ac.)
Street flow at end of street =     21.389(CFS)
Half street flow at end of street =     21.389(CFS)
Depth of flow =   0.458(Ft.), Average velocity =   6.351(Ft/s)
Flow width (from curb towards crown)=  18.157(Ft.)


++++++++++++++++++++++++++++++++++++++++++++++++++++++++++++++++++++++
Process from Point/Station      602.000 to Point/Station      603.000
**** PIPEFLOW TRAVEL TIME (Program estimated size) ****
______________________________________________________________________
Upstream point/station elevation =   411.000(Ft.)
Downstream point/station elevation =   350.000(Ft.)
Pipe length  =   760.00(Ft.)   Manning's N = 0.013
No. of pipes = 1  Required pipe flow  =    21.389(CFS)
Nearest computed pipe diameter  =     18.00(In.)
Calculated individual pipe flow  =    21.389(CFS)
Normal flow depth in pipe =   11.30(In.)
```

```
Flow top width inside pipe =   17.40(In.)
Critical depth could not be calculated.
Pipe flow velocity =     18.32(Ft/s)
Travel time through pipe =    0.69 min.
Time of concentration (TC) =     4.87 min.


++++++++++++++++++++++++++++++++++++++++++++++++++++++++++++++++++++++
Process from Point/Station      602.000 to Point/Station      603.000
**** SUBAREA FLOW ADDITION ****
______________________________________________________________________
Decimal fraction soil group A = 0.000
Decimal fraction soil group B = 0.000
Decimal fraction soil group C = 0.000
Decimal fraction soil group D = 1.000
[MEDIUM DENSITY RESIDENTIAL                    ]
(7.3 DU/A or Less       )
Impervious value, Ai = 0.400
Sub-Area C Value = 0.570
Time of concentration =     4.87 min.
Rainfall intensity =      7.641(In/Hr) for a   100.0 year storm
Effective runoff coefficient used for total area
(Q=KCIA) is C = 0.591  CA =      3.563
Subarea runoff =      5.836(CFS) for      1.340(Ac.)
Total runoff =     27.225(CFS)  Total area =       6.030(Ac.)


++++++++++++++++++++++++++++++++++++++++++++++++++++++++++++++++++++++
Process from Point/Station      602.000 to Point/Station      603.000
**** CONFLUENCE OF MAIN STREAMS ****
______________________________________________________________________
The following data inside Main Stream is listed:
In Main Stream number: 1
Stream flow area =      6.030(Ac.)
Runoff from this stream =     27.225(CFS)
Time of concentration =    4.87 min.
Rainfall intensity =     7.641(In/Hr)
Program is now starting with Main Stream No. 2


++++++++++++++++++++++++++++++++++++++++++++++++++++++++++++++++++++++
Process from Point/Station      604.000 to Point/Station      605.000
**** INITIAL AREA EVALUATION ****
______________________________________________________________________
Decimal fraction soil group A = 0.000
Decimal fraction soil group B = 0.000
Decimal fraction soil group C = 0.000
Decimal fraction soil group D = 1.000
[UNDISTURBED NATURAL TERRAIN                   ]
(Permanent Open Space   )
Impervious value, Ai = 0.000
Sub-Area C Value = 0.350
Initial subarea total flow distance  =  100.000(Ft.)
Highest elevation =  420.000(Ft.)
Lowest elevation =  400.000(Ft.)
Elevation difference =   20.000(Ft.) Slope = 20.000 %
INITIAL AREA TIME OF CONCENTRATION CALCULATIONS:
The maximum overland flow distance is 100.00 (Ft)
for the top area slope value of  20.00 %, in a development type of
 Permanent Open Space
```

```
In Accordance With Table 3-2
Initial Area Time of Concentration =   6.90 minutes
 (for slope value of  10.00 %)
Rainfall intensity (I) =      6.207(In/Hr) for a   100.0 year storm
Effective runoff coefficient used for area (Q=KCIA) is C = 0.350
Subarea runoff =      0.435(CFS)
Total initial stream area =        0.200(Ac.)


++++++++++++++++++++++++++++++++++++++++++++++++++++++++++++++++++++++
Process from Point/Station      605.000 to Point/Station      606.000
**** IMPROVED CHANNEL TRAVEL TIME ****
______________________________________________________________________
Upstream point elevation =   400.000(Ft.)
Downstream point elevation =   364.000(Ft.)
Channel length thru subarea  =   320.000(Ft.)
Channel base width =    3.000(Ft.)
Slope or 'Z' of left channel bank =   3.000
Slope or 'Z' of right channel bank =   3.000
Estimated mean flow rate at midpoint of channel =      3.161(CFS)
Manning's 'N'    = 0.050
Maximum depth of channel  =    1.000(Ft.)
Flow(q) thru subarea =      3.161(CFS)
Depth of flow =   0.246(Ft.), Average velocity =   3.433(Ft/s)
Channel flow top width =    4.478(Ft.)
Flow Velocity =    3.43(Ft/s)
Travel time  =    1.55 min.
Time of concentration =    8.45 min.
Critical depth =      0.293(Ft.)
 Adding area flow to channel
Decimal fraction soil group A = 0.000
Decimal fraction soil group B = 0.000
Decimal fraction soil group C = 0.000
Decimal fraction soil group D = 1.000
[UNDISTURBED NATURAL TERRAIN                  ]
(Permanent Open Space   )
Impervious value, Ai = 0.000
Sub-Area C Value = 0.350
Rainfall intensity =      5.445(In/Hr) for a   100.0 year storm
Effective runoff coefficient used for total area
(Q=KCIA) is C = 0.350  CA =      1.071
Subarea runoff =      5.397(CFS) for      2.860(Ac.)
Total runoff =      5.832(CFS)  Total area =       3.060(Ac.)
Depth of flow =   0.347(Ft.), Average velocity =   4.162(Ft/s)
Critical depth =      0.422(Ft.)


++++++++++++++++++++++++++++++++++++++++++++++++++++++++++++++++++++++
Process from Point/Station      606.000 to Point/Station      607.000
**** STREET FLOW TRAVEL TIME + SUBAREA FLOW ADDITION ****
______________________________________________________________________
Top of street segment elevation =   357.000(Ft.)
End of street segment elevation =   345.000(Ft.)
Length of street segment  =   550.000(Ft.)
Height of curb above gutter flowline  =    6.0(In.)
Width of half street (curb to crown)  =  22.000(Ft.)
Distance from crown to crossfall grade break  =  18.000(Ft.)
Slope from gutter to grade break (v/hz) =   0.020
Slope from grade break to crown (v/hz)  =   0.020
Street flow is on [1] side(s) of the street
```

```
Distance from curb to property line  =  10.000(Ft.)
Slope from curb to property line (v/hz) =   0.020
Gutter width =   1.500(Ft.)
Gutter hike from flowline =  1.500(In.)
 Manning's N in gutter =  0.0150
 Manning's N from gutter to grade break =  0.0180
 Manning's N from grade break to crown =  0.0180
Estimated mean flow rate at midpoint of street =      7.812(CFS)
Depth of flow =   0.390(Ft.), Average velocity =   3.482(Ft/s)
Streetflow hydraulics at midpoint of street travel:
Halfstreet flow width =  14.738(Ft.)
Flow velocity =   3.48(Ft/s)
Travel time =    2.63 min.     TC =   11.09  min.
 Adding area flow to street
Decimal fraction soil group A = 0.000
Decimal fraction soil group B = 0.000
Decimal fraction soil group C = 0.000
Decimal fraction soil group D = 1.000
[UNDISTURBED NATURAL TERRAIN                  ]
(Permanent Open Space   )
Impervious value, Ai = 0.000
Sub-Area C Value = 0.350
Rainfall intensity =      4.572(In/Hr) for a   100.0 year storm
Effective runoff coefficient used for total area
(Q=KCIA) is C = 0.350  CA =      2.128
Subarea runoff =      3.897(CFS) for      3.020(Ac.)
Total runoff =      9.729(CFS)  Total area =       6.080(Ac.)
Street flow at end of street =      9.729(CFS)
Half street flow at end of street =      9.729(CFS)
Depth of flow =   0.416(Ft.), Average velocity =   3.671(Ft/s)
Flow width (from curb towards crown)=  16.058(Ft.)


++++++++++++++++++++++++++++++++++++++++++++++++++++++++++++++++++++++
Process from Point/Station      607.000 to Point/Station      608.000
**** PIPEFLOW TRAVEL TIME (Program estimated size) ****
______________________________________________________________________
Upstream point/station elevation =   345.000(Ft.)
Downstream point/station elevation =   344.600(Ft.)
Pipe length  =    40.00(Ft.)   Manning's N = 0.013
No. of pipes = 1  Required pipe flow  =     9.729(CFS)
Nearest computed pipe diameter  =     18.00(In.)
Calculated individual pipe flow  =     9.729(CFS)
Normal flow depth in pipe =   13.69(In.)
Flow top width inside pipe =   15.37(In.)
Critical Depth =   14.44(In.)
Pipe flow velocity =      6.75(Ft/s)
Travel time through pipe =    0.10 min.
Time of concentration (TC) =    11.18 min.


++++++++++++++++++++++++++++++++++++++++++++++++++++++++++++++++++++++
Process from Point/Station      607.000 to Point/Station      608.000
**** CONFLUENCE OF MINOR STREAMS ****
______________________________________________________________________
Along Main Stream number: 2 in normal stream number 1
Stream flow area =      6.080(Ac.)
Runoff from this stream =      9.729(CFS)
Time of concentration =   11.18 min.
Rainfall intensity =     4.546(In/Hr)
```

```
++++++++++++++++++++++++++++++++++++++++++++++++++++++++++++++++++++++
Process from Point/Station      609.000 to Point/Station      610.000
**** INITIAL AREA EVALUATION ****
______________________________________________________________________
Decimal fraction soil group A = 0.000
Decimal fraction soil group B = 0.000
Decimal fraction soil group C = 0.000
Decimal fraction soil group D = 1.000
[MEDIUM DENSITY RESIDENTIAL                    ]
(7.3 DU/A or Less        )
Impervious value, Ai = 0.400
Sub-Area C Value = 0.570
Initial subarea total flow distance  =  100.000(Ft.)
Highest elevation =  362.000(Ft.)
Lowest elevation =  361.000(Ft.)
Elevation difference =    1.000(Ft.) Slope =  1.000 %
INITIAL AREA TIME OF CONCENTRATION CALCULATIONS:
The maximum overland flow distance is 65.00 (Ft)
for the top area slope value of   1.00 %, in a development type of
 7.3 DU/A or Less
In Accordance With Table 3-2
Initial Area Time of Concentration =   8.40 minutes
 (for slope value of   1.00 %)
Rainfall intensity (I) =      5.468(In/Hr) for a   100.0 year storm
Effective runoff coefficient used for area (Q=KCIA) is C = 0.570
Subarea runoff =      0.436(CFS)
Total initial stream area =        0.140(Ac.)


++++++++++++++++++++++++++++++++++++++++++++++++++++++++++++++++++++++
Process from Point/Station      610.000 to Point/Station      608.000
**** STREET FLOW TRAVEL TIME + SUBAREA FLOW ADDITION ****
______________________________________________________________________
Top of street segment elevation =   361.000(Ft.)
End of street segment elevation =   358.000(Ft.)
Length of street segment  =   345.000(Ft.)
Height of curb above gutter flowline  =    6.0(In.)
Width of half street (curb to crown)  =  22.000(Ft.)
Distance from crown to crossfall grade break  =  18.000(Ft.)
Slope from gutter to grade break (v/hz) =   0.020
Slope from grade break to crown (v/hz)  =   0.020
Street flow is on [1] side(s) of the street
Distance from curb to property line  =  10.000(Ft.)
Slope from curb to property line (v/hz) =   0.020
Gutter width =   1.500(Ft.)
Gutter hike from flowline =  1.500(In.)
 Manning's N in gutter =  0.0150
 Manning's N from gutter to grade break =  0.0180
 Manning's N from grade break to crown =  0.0180
Estimated mean flow rate at midpoint of street =      3.848(CFS)
Depth of flow =   0.362(Ft.), Average velocity =   2.072(Ft/s)
Streetflow hydraulics at midpoint of street travel:
Halfstreet flow width =  13.364(Ft.)
Flow velocity =   2.07(Ft/s)
Travel time =    2.78 min.     TC =   11.18  min.
 Adding area flow to street
Decimal fraction soil group A = 0.000
Decimal fraction soil group B = 0.000
```

```
Decimal fraction soil group C = 0.000
Decimal fraction soil group D = 1.000
[MEDIUM DENSITY RESIDENTIAL                    ]
(7.3 DU/A or Less       )
Impervious value, Ai = 0.400
Sub-Area C Value = 0.570
Rainfall intensity =      4.548(In/Hr) for a   100.0 year storm
Effective runoff coefficient used for total area
(Q=KCIA) is C = 0.570  CA =      1.585
Subarea runoff =      6.771(CFS) for      2.640(Ac.)
Total runoff =      7.207(CFS)  Total area =       2.780(Ac.)
Street flow at end of street =      7.207(CFS)
Half street flow at end of street =      7.207(CFS)
Depth of flow =   0.437(Ft.), Average velocity =   2.409(Ft/s)
Flow width (from curb towards crown)=  17.089(Ft.)


++++++++++++++++++++++++++++++++++++++++++++++++++++++++++++++++++++++
Process from Point/Station      610.000 to Point/Station      608.000
**** CONFLUENCE OF MINOR STREAMS ****
______________________________________________________________________
Along Main Stream number: 2 in normal stream number 2
Stream flow area =      2.780(Ac.)
Runoff from this stream =      7.207(CFS)
Time of concentration =   11.18 min.
Rainfall intensity =     4.548(In/Hr)
Summary of stream data:

Stream   Flow rate      TC            Rainfall Intensity
 No.       (CFS)       (min)                 (In/Hr)


1        9.729     11.18          4.546
2        7.207     11.18          4.548
Qmax(1) =
         1.000 *    1.000 *     9.729) +
         0.999 *    1.000 *     7.207) + =      16.932
Qmax(2) =
         1.000 *    0.999 *     9.729) +
         1.000 *    1.000 *     7.207) + =      16.928

Total of 2 streams to confluence:
Flow rates before confluence point:
       9.729       7.207
Maximum flow rates at confluence using above data:
       16.932       16.928
Area of streams before confluence:
        6.080        2.780
Results of confluence:
Total flow rate =     16.932(CFS)
Time of concentration =    11.185 min.
Effective stream area after confluence =      8.860(Ac.)


++++++++++++++++++++++++++++++++++++++++++++++++++++++++++++++++++++++
Process from Point/Station      608.000 to Point/Station      603.000
**** PIPEFLOW TRAVEL TIME (Program estimated size) ****
______________________________________________________________________
Upstream point/station elevation =   358.000(Ft.)
Downstream point/station elevation =   357.000(Ft.)
```

```
Pipe length  =   100.00(Ft.)   Manning's N = 0.013
No. of pipes = 1  Required pipe flow  =    16.932(CFS)
Nearest computed pipe diameter  =     24.00(In.)
Calculated individual pipe flow  =    16.932(CFS)
Normal flow depth in pipe =   15.49(In.)
Flow top width inside pipe =   22.96(In.)
Critical Depth =   17.79(In.)
Pipe flow velocity =      7.90(Ft/s)
Travel time through pipe =    0.21 min.
Time of concentration (TC) =    11.40 min.


++++++++++++++++++++++++++++++++++++++++++++++++++++++++++++++++++++++
Process from Point/Station      608.000 to Point/Station      603.000
**** CONFLUENCE OF MAIN STREAMS ****
______________________________________________________________________
The following data inside Main Stream is listed:
In Main Stream number: 2
Stream flow area =      8.860(Ac.)
Runoff from this stream =     16.932(CFS)
Time of concentration =   11.40 min.
Rainfall intensity =     4.491(In/Hr)
Summary of stream data:

Stream   Flow rate      TC            Rainfall Intensity
 No.       (CFS)       (min)                 (In/Hr)


1       27.225      4.87          7.641
2       16.932     11.40          4.491
Qmax(1) =
         1.000 *    1.000 *    27.225) +
         1.000 *    0.428 *    16.932) + =      34.464
Qmax(2) =
         0.588 *    1.000 *    27.225) +
         1.000 *    1.000 *    16.932) + =      32.935

Total of 2 main streams to confluence:
Flow rates before confluence point:
      27.225      16.932
Maximum flow rates at confluence using above data:
       34.464       32.935
Area of streams before confluence:
        6.030        8.860


Results of confluence:
Total flow rate =     34.464(CFS)
Time of concentration =     4.873 min.
Effective stream area after confluence  =     14.890(Ac.)


++++++++++++++++++++++++++++++++++++++++++++++++++++++++++++++++++++++
Process from Point/Station      603.000 to Point/Station      611.000
**** PIPEFLOW TRAVEL TIME (Program estimated size) ****
______________________________________________________________________
Upstream point/station elevation =   350.000(Ft.)
Downstream point/station elevation =   340.000(Ft.)
Pipe length  =   270.00(Ft.)   Manning's N = 0.013
No. of pipes = 1  Required pipe flow  =    34.464(CFS)
```

```
Nearest computed pipe diameter  =     24.00(In.)
Calculated individual pipe flow  =    34.464(CFS)
Normal flow depth in pipe =   16.13(In.)
Flow top width inside pipe =   22.54(In.)
Critical depth could not be calculated.
Pipe flow velocity =     15.37(Ft/s)
Travel time through pipe =    0.29 min.
Time of concentration (TC) =     5.17 min.


++++++++++++++++++++++++++++++++++++++++++++++++++++++++++++++++++++++
Process from Point/Station      603.000 to Point/Station      611.000
**** SUBAREA FLOW ADDITION ****
______________________________________________________________________
Decimal fraction soil group A = 0.000
Decimal fraction soil group B = 0.000
Decimal fraction soil group C = 0.000
Decimal fraction soil group D = 1.000
[MEDIUM DENSITY RESIDENTIAL                  ]
(7.3 DU/A or Less       )
Impervious value, Ai = 0.400
Sub-Area C Value = 0.570
Time of concentration =     5.17 min.
Rainfall intensity =      7.482(In/Hr) for a   100.0 year storm
Effective runoff coefficient used for total area
(Q=KCIA) is C = 0.494  CA =      7.931
Subarea runoff =     24.878(CFS) for      1.150(Ac.)
Total runoff =     59.342(CFS)  Total area =      16.040(Ac.)


++++++++++++++++++++++++++++++++++++++++++++++++++++++++++++++++++++++
Process from Point/Station      611.000 to Point/Station      612.000
**** PIPEFLOW TRAVEL TIME (Program estimated size) ****
______________________________________________________________________
Upstream point/station elevation =   340.000(Ft.)
Downstream point/station elevation =   260.000(Ft.)
Pipe length  =   200.00(Ft.)   Manning's N = 0.013
No. of pipes = 1  Required pipe flow  =    59.342(CFS)
Nearest computed pipe diameter  =     18.00(In.)
Calculated individual pipe flow  =    59.342(CFS)
Normal flow depth in pipe =   13.27(In.)
Flow top width inside pipe =   15.85(In.)
Critical depth could not be calculated.
Pipe flow velocity =     42.50(Ft/s)
Travel time through pipe =    0.08 min.
Time of concentration (TC) =     5.24 min.


++++++++++++++++++++++++++++++++++++++++++++++++++++++++++++++++++++++
Process from Point/Station      611.000 to Point/Station      612.000
**** CONFLUENCE OF MAIN STREAMS ****
______________________________________________________________________
The following data inside Main Stream is listed:
In Main Stream number: 1
Stream flow area =     16.040(Ac.)
Runoff from this stream =     59.342(CFS)
Time of concentration =    5.24 min.
Rainfall intensity =     7.410(In/Hr)
Program is now starting with Main Stream No. 2
```

```
++++++++++++++++++++++++++++++++++++++++++++++++++++++++++++++++++++++
Process from Point/Station      613.000 to Point/Station      614.000
**** INITIAL AREA EVALUATION ****
______________________________________________________________________
Decimal fraction soil group A = 0.000
Decimal fraction soil group B = 0.000
Decimal fraction soil group C = 0.000
Decimal fraction soil group D = 1.000
[MEDIUM DENSITY RESIDENTIAL                    ]
(7.3 DU/A or Less       )
Impervious value, Ai = 0.400
Sub-Area C Value = 0.570
Initial subarea total flow distance  =  100.000(Ft.)
Highest elevation =  347.000(Ft.)
Lowest elevation =  340.000(Ft.)
Elevation difference =    7.000(Ft.) Slope =  7.000 %
INITIAL AREA TIME OF CONCENTRATION CALCULATIONS:
The maximum overland flow distance is 100.00 (Ft)
for the top area slope value of   7.00 %, in a development type of
 7.3 DU/A or Less
In Accordance With Table 3-2
Initial Area Time of Concentration =   6.00 minutes
 (for slope value of   5.00 %)
Rainfall intensity (I) =      6.793(In/Hr) for a   100.0 year storm
Effective runoff coefficient used for area (Q=KCIA) is C = 0.570
Subarea runoff =      0.310(CFS)
Total initial stream area =        0.080(Ac.)


++++++++++++++++++++++++++++++++++++++++++++++++++++++++++++++++++++++
Process from Point/Station      614.000 to Point/Station      615.000
**** STREET FLOW TRAVEL TIME + SUBAREA FLOW ADDITION ****
______________________________________________________________________
Top of street segment elevation =   340.000(Ft.)
End of street segment elevation =   302.000(Ft.)
Length of street segment  =   865.000(Ft.)
Height of curb above gutter flowline  =    6.0(In.)
Width of half street (curb to crown)  =  22.000(Ft.)
Distance from crown to crossfall grade break  =  18.000(Ft.)
Slope from gutter to grade break (v/hz) =   0.020
Slope from grade break to crown (v/hz)  =   0.020
Street flow is on [1] side(s) of the street
Distance from curb to property line  =  10.000(Ft.)
Slope from curb to property line (v/hz) =   0.020
Gutter width =   1.500(Ft.)
Gutter hike from flowline =  1.500(In.)
 Manning's N in gutter =  0.0150
 Manning's N from gutter to grade break =  0.0180
 Manning's N from grade break to crown =  0.0180
Estimated mean flow rate at midpoint of street =      5.638(CFS)
Depth of flow =   0.320(Ft.), Average velocity =   4.208(Ft/s)
Streetflow hydraulics at midpoint of street travel:
Halfstreet flow width =  11.262(Ft.)
Flow velocity =   4.21(Ft/s)
Travel time =    3.43 min.     TC =    9.43  min.
 Adding area flow to street
Decimal fraction soil group A = 0.000
Decimal fraction soil group B = 0.000
Decimal fraction soil group C = 0.000
```

```
Decimal fraction soil group D = 1.000
[MEDIUM DENSITY RESIDENTIAL                    ]
(7.3 DU/A or Less       )
Impervious value, Ai = 0.400
Sub-Area C Value = 0.570
Rainfall intensity =      5.076(In/Hr) for a   100.0 year storm
Effective runoff coefficient used for total area
(Q=KCIA) is C = 0.570  CA =      2.172
Subarea runoff =     10.714(CFS) for      3.730(Ac.)
Total runoff =     11.024(CFS)  Total area =       3.810(Ac.)
Street flow at end of street =     11.024(CFS)
Half street flow at end of street =     11.024(CFS)
Depth of flow =   0.389(Ft.), Average velocity =   4.935(Ft/s)
Flow width (from curb towards crown)=  14.706(Ft.)


++++++++++++++++++++++++++++++++++++++++++++++++++++++++++++++++++++++
Process from Point/Station      615.000 to Point/Station      612.000
**** PIPEFLOW TRAVEL TIME (Program estimated size) ****
______________________________________________________________________
Upstream point/station elevation =   302.000(Ft.)
Downstream point/station elevation =   260.000(Ft.)
Pipe length  =   210.00(Ft.)   Manning's N = 0.013
No. of pipes = 1  Required pipe flow  =    11.024(CFS)
Nearest computed pipe diameter  =     12.00(In.)
Calculated individual pipe flow  =    11.024(CFS)
Normal flow depth in pipe =    7.34(In.)
Flow top width inside pipe =   11.70(In.)
Critical depth could not be calculated.
Pipe flow velocity =     21.89(Ft/s)
Travel time through pipe =    0.16 min.
Time of concentration (TC) =     9.59 min.


++++++++++++++++++++++++++++++++++++++++++++++++++++++++++++++++++++++
Process from Point/Station      615.000 to Point/Station      612.000
**** CONFLUENCE OF MAIN STREAMS ****
______________________________________________________________________
The following data inside Main Stream is listed:
In Main Stream number: 2
Stream flow area =      3.810(Ac.)
Runoff from this stream =     11.024(CFS)
Time of concentration =    9.59 min.
Rainfall intensity =     5.021(In/Hr)
Summary of stream data:

Stream   Flow rate      TC            Rainfall Intensity
 No.       (CFS)       (min)                 (In/Hr)


1       59.342      5.24          7.410
2       11.024      9.59          5.021
Qmax(1) =
         1.000 *    1.000 *    59.342) +
         1.000 *    0.547 *    11.024) + =      65.373
Qmax(2) =
         0.678 *    1.000 *    59.342) +
         1.000 *    1.000 *    11.024) + =      51.239

Total of 2 main streams to confluence:
```

```
Flow rates before confluence point:
      59.342      11.024
Maximum flow rates at confluence using above data:
       65.373       51.239
Area of streams before confluence:
       16.040        3.810


Results of confluence:
Total flow rate =      65.373(CFS)
Time of concentration =      5.244 min.
Effective stream area after confluence  =      19.850(Ac.)


++++++++++++++++++++++++++++++++++++++++++++++++++++++++++++++++++++++
Process from Point/Station      612.000 to Point/Station      616.000
**** IMPROVED CHANNEL TRAVEL TIME ****
______________________________________________________________________
Upstream point elevation =   260.000(Ft.)
Downstream point elevation =   173.000(Ft.)
Channel length thru subarea  =   625.000(Ft.)
Channel base width =    3.000(Ft.)
Slope or 'Z' of left channel bank =   2.000
Slope or 'Z' of right channel bank =   2.000
Estimated mean flow rate at midpoint of channel =     77.205(CFS)
Manning's 'N'    = 0.050
Maximum depth of channel  =    5.000(Ft.)
Flow(q) thru subarea =     77.205(CFS)
Depth of flow =   1.355(Ft.), Average velocity =   9.980(Ft/s)
Channel flow top width =    8.419(Ft.)
Flow Velocity =    9.98(Ft/s)
Travel time  =    1.04 min.
Time of concentration =    6.29 min.
Critical depth =      1.859(Ft.)
 Adding area flow to channel
Decimal fraction soil group A = 0.000
Decimal fraction soil group B = 0.000
Decimal fraction soil group C = 0.000
Decimal fraction soil group D = 1.000
[UNDISTURBED NATURAL TERRAIN                    ]
(Permanent Open Space   )
Impervious value, Ai = 0.000
Sub-Area C Value = 0.350
Rainfall intensity =      6.591(In/Hr) for a   100.0 year storm
Effective runoff coefficient used for total area
(Q=KCIA) is C = 0.457  CA =     13.498
Subarea runoff =     23.593(CFS) for      9.700(Ac.)
Total runoff =     88.966(CFS)  Total area =      29.550(Ac.)
Depth of flow =   1.453(Ft.), Average velocity =  10.364(Ft/s)
Critical depth =      2.000(Ft.)


++++++++++++++++++++++++++++++++++++++++++++++++++++++++++++++++++++++
Process from Point/Station      612.000 to Point/Station      616.000
**** CONFLUENCE OF MAIN STREAMS ****
______________________________________________________________________
The following data inside Main Stream is listed:
In Main Stream number: 1
Stream flow area =     29.550(Ac.)
Runoff from this stream =     88.966(CFS)
```

```
Time of concentration =    6.29 min.
Rainfall intensity =     6.591(In/Hr)
Program is now starting with Main Stream No. 2


++++++++++++++++++++++++++++++++++++++++++++++++++++++++++++++++++++++
Process from Point/Station      617.000 to Point/Station      618.000
**** INITIAL AREA EVALUATION ****
______________________________________________________________________
Decimal fraction soil group A = 0.000
Decimal fraction soil group B = 0.000
Decimal fraction soil group C = 0.000
Decimal fraction soil group D = 1.000
[MEDIUM DENSITY RESIDENTIAL                    ]
(7.3 DU/A or Less       )
Impervious value, Ai = 0.400
Sub-Area C Value = 0.570
Initial subarea total flow distance  =  100.000(Ft.)
Highest elevation =  345.000(Ft.)
Lowest elevation =  344.000(Ft.)
Elevation difference =    1.000(Ft.) Slope =  1.000 %
INITIAL AREA TIME OF CONCENTRATION CALCULATIONS:
The maximum overland flow distance is 65.00 (Ft)
for the top area slope value of   1.00 %, in a development type of
 7.3 DU/A or Less
In Accordance With Table 3-2
Initial Area Time of Concentration =   8.40 minutes
 (for slope value of   1.00 %)
Rainfall intensity (I) =      5.468(In/Hr) for a   100.0 year storm
Effective runoff coefficient used for area (Q=KCIA) is C = 0.570
Subarea runoff =      0.717(CFS)
Total initial stream area =        0.230(Ac.)


++++++++++++++++++++++++++++++++++++++++++++++++++++++++++++++++++++++
Process from Point/Station      618.000 to Point/Station      619.000
**** STREET FLOW TRAVEL TIME + SUBAREA FLOW ADDITION ****
______________________________________________________________________
Top of street segment elevation =   344.000(Ft.)
End of street segment elevation =   334.000(Ft.)
Length of street segment  =   510.000(Ft.)
Height of curb above gutter flowline  =    6.0(In.)
Width of half street (curb to crown)  =  22.000(Ft.)
Distance from crown to crossfall grade break  =  18.000(Ft.)
Slope from gutter to grade break (v/hz) =   0.020
Slope from grade break to crown (v/hz)  =   0.020
Street flow is on [1] side(s) of the street
Distance from curb to property line  =  10.000(Ft.)
Slope from curb to property line (v/hz) =   0.020
Gutter width =   1.500(Ft.)
Gutter hike from flowline =  1.500(In.)
 Manning's N in gutter =  0.0150
 Manning's N from gutter to grade break =  0.0180
 Manning's N from grade break to crown =  0.0180
Estimated mean flow rate at midpoint of street =      8.327(CFS)
Depth of flow =   0.404(Ft.), Average velocity =   3.396(Ft/s)
Streetflow hydraulics at midpoint of street travel:
Halfstreet flow width =  15.430(Ft.)
Flow velocity =   3.40(Ft/s)
Travel time =    2.50 min.     TC =   10.90  min.
```

```
 Adding area flow to street
Decimal fraction soil group A = 0.000
Decimal fraction soil group B = 0.000
Decimal fraction soil group C = 0.000
Decimal fraction soil group D = 1.000
[MEDIUM DENSITY RESIDENTIAL                    ]
(7.3 DU/A or Less       )
Impervious value, Ai = 0.400
Sub-Area C Value = 0.570
Rainfall intensity =      4.621(In/Hr) for a   100.0 year storm
Effective runoff coefficient used for total area
(Q=KCIA) is C = 0.570  CA =      3.437
Subarea runoff =     15.167(CFS) for      5.800(Ac.)
Total runoff =     15.883(CFS)  Total area =       6.030(Ac.)
Street flow at end of street =     15.883(CFS)
Half street flow at end of street =     15.883(CFS)
Depth of flow =   0.491(Ft.), Average velocity =   3.972(Ft/s)
Flow width (from curb towards crown)=  19.819(Ft.)


++++++++++++++++++++++++++++++++++++++++++++++++++++++++++++++++++++++
Process from Point/Station      619.000 to Point/Station      616.000
**** PIPEFLOW TRAVEL TIME (Program estimated size) ****
______________________________________________________________________
Upstream point/station elevation =   334.000(Ft.)
Downstream point/station elevation =   190.000(Ft.)
Pipe length  =   610.00(Ft.)   Manning's N = 0.013
No. of pipes = 1  Required pipe flow  =    15.883(CFS)
Nearest computed pipe diameter  =     12.00(In.)
Calculated individual pipe flow  =    15.883(CFS)
Normal flow depth in pipe =    9.05(In.)
Flow top width inside pipe =   10.34(In.)
Critical depth could not be calculated.
Pipe flow velocity =     25.00(Ft/s)
Travel time through pipe =    0.41 min.
Time of concentration (TC) =    11.31 min.


++++++++++++++++++++++++++++++++++++++++++++++++++++++++++++++++++++++
Process from Point/Station      619.000 to Point/Station      616.000
**** CONFLUENCE OF MAIN STREAMS ****
______________________________________________________________________
The following data inside Main Stream is listed:
In Main Stream number: 2
Stream flow area =      6.030(Ac.)
Runoff from this stream =     15.883(CFS)
Time of concentration =   11.31 min.
Rainfall intensity =     4.513(In/Hr)
Program is now starting with Main Stream No. 3


++++++++++++++++++++++++++++++++++++++++++++++++++++++++++++++++++++++
Process from Point/Station      620.000 to Point/Station      621.000
**** INITIAL AREA EVALUATION ****
______________________________________________________________________
Decimal fraction soil group A = 0.000
Decimal fraction soil group B = 0.000
Decimal fraction soil group C = 0.000
Decimal fraction soil group D = 1.000
[MEDIUM DENSITY RESIDENTIAL                    ]
```

```
(7.3 DU/A or Less       )
Impervious value, Ai = 0.400
Sub-Area C Value = 0.570
Initial subarea total flow distance  =  100.000(Ft.)
Highest elevation =  307.000(Ft.)
Lowest elevation =  306.000(Ft.)
Elevation difference =    1.000(Ft.) Slope =  1.000 %
INITIAL AREA TIME OF CONCENTRATION CALCULATIONS:
The maximum overland flow distance is 65.00 (Ft)
for the top area slope value of   1.00 %, in a development type of
 7.3 DU/A or Less
In Accordance With Table 3-2
Initial Area Time of Concentration =   8.40 minutes
 (for slope value of   1.00 %)
Rainfall intensity (I) =      5.468(In/Hr) for a   100.0 year storm
Effective runoff coefficient used for area (Q=KCIA) is C = 0.570
Subarea runoff =      0.499(CFS)
Total initial stream area =        0.160(Ac.)


++++++++++++++++++++++++++++++++++++++++++++++++++++++++++++++++++++++
Process from Point/Station      621.000 to Point/Station      622.000
**** STREET FLOW TRAVEL TIME + SUBAREA FLOW ADDITION ****
______________________________________________________________________
Top of street segment elevation =   306.000(Ft.)
End of street segment elevation =   285.000(Ft.)
Length of street segment  =   685.000(Ft.)
Height of curb above gutter flowline  =    6.0(In.)
Width of half street (curb to crown)  =  22.000(Ft.)
Distance from crown to crossfall grade break  =  18.000(Ft.)
Slope from gutter to grade break (v/hz) =   0.020
Slope from grade break to crown (v/hz)  =   0.020
Street flow is on [1] side(s) of the street
Distance from curb to property line  =  10.000(Ft.)
Slope from curb to property line (v/hz) =   0.020
Gutter width =   1.500(Ft.)
Gutter hike from flowline =  1.500(In.)
 Manning's N in gutter =  0.0150
 Manning's N from gutter to grade break =  0.0180
 Manning's N from grade break to crown =  0.0180
Estimated mean flow rate at midpoint of street =      7.991(CFS)
Depth of flow =   0.373(Ft.), Average velocity =   3.985(Ft/s)
Streetflow hydraulics at midpoint of street travel:
Halfstreet flow width =  13.907(Ft.)
Flow velocity =   3.98(Ft/s)
Travel time =    2.87 min.     TC =   11.27  min.
 Adding area flow to street
Decimal fraction soil group A = 0.000
Decimal fraction soil group B = 0.000
Decimal fraction soil group C = 0.000
Decimal fraction soil group D = 1.000
[MEDIUM DENSITY RESIDENTIAL                    ]
(7.3 DU/A or Less       )
Impervious value, Ai = 0.400
Sub-Area C Value = 0.570
Rainfall intensity =      4.525(In/Hr) for a   100.0 year storm
Effective runoff coefficient used for total area
(Q=KCIA) is C = 0.570  CA =      3.409
Subarea runoff =     14.925(CFS) for      5.820(Ac.)
Total runoff =     15.423(CFS)  Total area =       5.980(Ac.)
```

```
Street flow at end of street =     15.423(CFS)
Half street flow at end of street =     15.423(CFS)
Depth of flow =   0.455(Ft.), Average velocity =   4.670(Ft/s)
Flow width (from curb towards crown)=  17.977(Ft.)


++++++++++++++++++++++++++++++++++++++++++++++++++++++++++++++++++++++
Process from Point/Station      622.000 to Point/Station      622.100
**** PIPEFLOW TRAVEL TIME (Program estimated size) ****
______________________________________________________________________
Upstream point/station elevation =   285.000(Ft.)
Downstream point/station elevation =   252.000(Ft.)
Pipe length  =   255.00(Ft.)   Manning's N = 0.013
No. of pipes = 1  Required pipe flow  =    15.423(CFS)
Nearest computed pipe diameter  =     15.00(In.)
Calculated individual pipe flow  =    15.423(CFS)
Normal flow depth in pipe =    8.93(In.)
Flow top width inside pipe =   14.72(In.)
Critical depth could not be calculated.
Pipe flow velocity =     20.25(Ft/s)
Travel time through pipe =    0.21 min.
Time of concentration (TC) =    11.47 min.


++++++++++++++++++++++++++++++++++++++++++++++++++++++++++++++++++++++
Process from Point/Station      622.000 to Point/Station      622.100
**** SUBAREA FLOW ADDITION ****
______________________________________________________________________
Decimal fraction soil group A = 0.000
Decimal fraction soil group B = 0.000
Decimal fraction soil group C = 0.000
Decimal fraction soil group D = 1.000
[MEDIUM DENSITY RESIDENTIAL                    ]
(7.3 DU/A or Less       )
Impervious value, Ai = 0.400
Sub-Area C Value = 0.570
Time of concentration =    11.47 min.
Rainfall intensity =      4.471(In/Hr) for a   100.0 year storm
Effective runoff coefficient used for total area
(Q=KCIA) is C = 0.570  CA =      5.022
Subarea runoff =      7.030(CFS) for      2.830(Ac.)
Total runoff =     22.453(CFS)  Total area =       8.810(Ac.)


++++++++++++++++++++++++++++++++++++++++++++++++++++++++++++++++++++++
Process from Point/Station      622.100 to Point/Station      616.000
**** PIPEFLOW TRAVEL TIME (Program estimated size) ****
______________________________________________________________________
Upstream point/station elevation =   252.000(Ft.)
Downstream point/station elevation =   203.000(Ft.)
Pipe length  =   150.00(Ft.)   Manning's N = 0.013
No. of pipes = 1  Required pipe flow  =    22.453(CFS)
Nearest computed pipe diameter  =     15.00(In.)
Calculated individual pipe flow  =    22.453(CFS)
Normal flow depth in pipe =    8.45(In.)
Flow top width inside pipe =   14.88(In.)
Critical depth could not be calculated.
Pipe flow velocity =     31.55(Ft/s)
Travel time through pipe =    0.08 min.
Time of concentration (TC) =    11.55 min.
```

```
++++++++++++++++++++++++++++++++++++++++++++++++++++++++++++++++++++++
Process from Point/Station      622.100 to Point/Station      616.000
**** CONFLUENCE OF MAIN STREAMS ****
______________________________________________________________________
The following data inside Main Stream is listed:
In Main Stream number: 3
Stream flow area =      8.810(Ac.)
Runoff from this stream =     22.453(CFS)
Time of concentration =   11.55 min.
Rainfall intensity =     4.451(In/Hr)
Summary of stream data:

Stream   Flow rate      TC            Rainfall Intensity
 No.       (CFS)       (min)                 (In/Hr)


1       88.966      6.29          6.591
2       15.883     11.31          4.513
3       22.453     11.55          4.451
Qmax(1) =
         1.000 *    1.000 *    88.966) +
         1.000 *    0.556 *    15.883) +
         1.000 *    0.544 *    22.453) + =     110.014
Qmax(2) =
         0.685 *    1.000 *    88.966) +
         1.000 *    1.000 *    15.883) +
         1.000 *    0.979 *    22.453) + =      98.782
Qmax(3) =
         0.675 *    1.000 *    88.966) +
         0.986 *    1.000 *    15.883) +
         1.000 *    1.000 *    22.453) + =      98.205

Total of 3 main streams to confluence:
Flow rates before confluence point:
      88.966      15.883      22.453
Maximum flow rates at confluence using above data:
      110.014       98.782       98.205
Area of streams before confluence:
       29.550        6.030        8.810


Results of confluence:
Total flow rate =    110.014(CFS)
Time of concentration =     6.287 min.
Effective stream area after confluence  =     44.390(Ac.)


++++++++++++++++++++++++++++++++++++++++++++++++++++++++++++++++++++++
Process from Point/Station      616.000 to Point/Station      623.000
**** IMPROVED CHANNEL TRAVEL TIME ****
______________________________________________________________________
Upstream point elevation =   173.000(Ft.)
Downstream point elevation =   149.000(Ft.)
Channel length thru subarea  =   460.000(Ft.)
Channel base width =    5.000(Ft.)
Slope or 'Z' of left channel bank =   4.000
Slope or 'Z' of right channel bank =   4.000
Estimated mean flow rate at midpoint of channel =    125.248(CFS)
```

```
Manning's 'N'    = 0.050
Maximum depth of channel  =    5.000(Ft.)
Flow(q) thru subarea =    125.248(CFS)
Depth of flow =   1.607(Ft.), Average velocity =   6.817(Ft/s)
Channel flow top width =   17.859(Ft.)
Flow Velocity =    6.82(Ft/s)
Travel time  =    1.12 min.
Time of concentration =    7.41 min.
Critical depth =      1.750(Ft.)
 Adding area flow to channel
Decimal fraction soil group A = 0.000
Decimal fraction soil group B = 0.000
Decimal fraction soil group C = 0.000
Decimal fraction soil group D = 1.000
[UNDISTURBED NATURAL TERRAIN                    ]
(Permanent Open Space   )
Impervious value, Ai = 0.000
Sub-Area C Value = 0.350
Rainfall intensity =      5.927(In/Hr) for a   100.0 year storm
Effective runoff coefficient used for total area
(Q=KCIA) is C = 0.480  CA =     23.714
Subarea runoff =     30.546(CFS) for      5.020(Ac.)
Total runoff =    140.560(CFS)  Total area =      49.410(Ac.)
Depth of flow =   1.697(Ft.), Average velocity =   7.027(Ft/s)
Critical depth =      1.859(Ft.)


++++++++++++++++++++++++++++++++++++++++++++++++++++++++++++++++++++++
Process from Point/Station      616.000 to Point/Station      623.000
**** CONFLUENCE OF MAIN STREAMS ****
______________________________________________________________________
The following data inside Main Stream is listed:
In Main Stream number: 1
Stream flow area =     49.410(Ac.)
Runoff from this stream =    140.560(CFS)
Time of concentration =    7.41 min.
Rainfall intensity =     5.927(In/Hr)
Program is now starting with Main Stream No. 2


++++++++++++++++++++++++++++++++++++++++++++++++++++++++++++++++++++++
Process from Point/Station      624.000 to Point/Station      625.000
**** INITIAL AREA EVALUATION ****
______________________________________________________________________
Decimal fraction soil group A = 0.000
Decimal fraction soil group B = 0.000
Decimal fraction soil group C = 0.000
Decimal fraction soil group D = 1.000
[MEDIUM DENSITY RESIDENTIAL                     ]
(7.3 DU/A or Less       )
Impervious value, Ai = 0.400
Sub-Area C Value = 0.570
Initial subarea total flow distance  =  120.000(Ft.)
Highest elevation =  249.000(Ft.)
Lowest elevation =  246.000(Ft.)
Elevation difference =    3.000(Ft.) Slope =  2.500 %
INITIAL AREA TIME OF CONCENTRATION CALCULATIONS:
The maximum overland flow distance is 95.00 (Ft)
for the top area slope value of   2.50 %, in a development type of
 7.3 DU/A or Less
```

```
In Accordance With Table 3-2
Initial Area Time of Concentration =   7.00 minutes
 (for slope value of   3.00 %)
Rainfall intensity (I) =      6.150(In/Hr) for a   100.0 year storm
Effective runoff coefficient used for area (Q=KCIA) is C = 0.570
Subarea runoff =      0.841(CFS)
Total initial stream area =        0.240(Ac.)


++++++++++++++++++++++++++++++++++++++++++++++++++++++++++++++++++++++
Process from Point/Station      625.000 to Point/Station      626.000
**** STREET FLOW TRAVEL TIME + SUBAREA FLOW ADDITION ****
______________________________________________________________________
Top of street segment elevation =   246.000(Ft.)
End of street segment elevation =   240.500(Ft.)
Length of street segment  =   345.000(Ft.)
Height of curb above gutter flowline  =    6.0(In.)
Width of half street (curb to crown)  =  22.000(Ft.)
Distance from crown to crossfall grade break  =  18.000(Ft.)
Slope from gutter to grade break (v/hz) =   0.020
Slope from grade break to crown (v/hz)  =   0.020
Street flow is on [1] side(s) of the street
Distance from curb to property line  =  10.000(Ft.)
Slope from curb to property line (v/hz) =   0.020
Gutter width =   1.500(Ft.)
Gutter hike from flowline =  1.500(In.)
 Manning's N in gutter =  0.0150
 Manning's N from gutter to grade break =  0.0180
 Manning's N from grade break to crown =  0.0180
Estimated mean flow rate at midpoint of street =      4.941(CFS)
Depth of flow =   0.357(Ft.), Average velocity =   2.770(Ft/s)
Streetflow hydraulics at midpoint of street travel:
Halfstreet flow width =  13.087(Ft.)
Flow velocity =   2.77(Ft/s)
Travel time =    2.08 min.     TC =    9.08  min.
 Adding area flow to street
Decimal fraction soil group A = 0.000
Decimal fraction soil group B = 0.000
Decimal fraction soil group C = 0.000
Decimal fraction soil group D = 1.000
[MEDIUM DENSITY RESIDENTIAL                    ]
(7.3 DU/A or Less       )
Impervious value, Ai = 0.400
Sub-Area C Value = 0.570
Rainfall intensity =      5.202(In/Hr) for a   100.0 year storm
Effective runoff coefficient used for total area
(Q=KCIA) is C = 0.570  CA =      1.727
Subarea runoff =      8.142(CFS) for      2.790(Ac.)
Total runoff =      8.984(CFS)  Total area =      3.030(Ac.)
Street flow at end of street =      8.984(CFS)
Half street flow at end of street =      8.984(CFS)
Depth of flow =   0.426(Ft.), Average velocity =   3.197(Ft/s)
Flow width (from curb towards crown)=  16.548(Ft.)


++++++++++++++++++++++++++++++++++++++++++++++++++++++++++++++++++++++
Process from Point/Station      626.000 to Point/Station      627.000
**** PIPEFLOW TRAVEL TIME (Program estimated size) ****
______________________________________________________________________
Upstream point/station elevation =   240.500(Ft.)
```

```
Downstream point/station elevation =   203.000(Ft.)
Pipe length  =   350.00(Ft.)   Manning's N = 0.013
No. of pipes = 1  Required pipe flow  =     8.984(CFS)
Nearest computed pipe diameter  =     12.00(In.)
Calculated individual pipe flow  =     8.984(CFS)
Normal flow depth in pipe =    7.90(In.)
Flow top width inside pipe =   11.38(In.)
Critical depth could not be calculated.
Pipe flow velocity =     16.38(Ft/s)
Travel time through pipe =    0.36 min.
Time of concentration (TC) =     9.43 min.


++++++++++++++++++++++++++++++++++++++++++++++++++++++++++++++++++++++
Process from Point/Station      626.000 to Point/Station      627.000
**** SUBAREA FLOW ADDITION ****
______________________________________________________________________
Decimal fraction soil group A = 0.000
Decimal fraction soil group B = 0.000
Decimal fraction soil group C = 0.000
Decimal fraction soil group D = 1.000
[MEDIUM DENSITY RESIDENTIAL                  ]
(7.3 DU/A or Less       )
Impervious value, Ai = 0.400
Sub-Area C Value = 0.570
Time of concentration =     9.43 min.
Rainfall intensity =      5.074(In/Hr) for a   100.0 year storm
Effective runoff coefficient used for total area
(Q=KCIA) is C = 0.570  CA =      4.948
Subarea runoff =     16.121(CFS) for      5.650(Ac.)
Total runoff =     25.104(CFS)  Total area =       8.680(Ac.)


++++++++++++++++++++++++++++++++++++++++++++++++++++++++++++++++++++++
Process from Point/Station      627.000 to Point/Station      623.000
**** PIPEFLOW TRAVEL TIME (Program estimated size) ****
______________________________________________________________________
Upstream point/station elevation =   203.000(Ft.)
Downstream point/station elevation =   149.000(Ft.)
Pipe length  =   275.00(Ft.)   Manning's N = 0.013
No. of pipes = 1  Required pipe flow  =    25.104(CFS)
Nearest computed pipe diameter  =     15.00(In.)
Calculated individual pipe flow  =    25.104(CFS)
Normal flow depth in pipe =   10.90(In.)
Flow top width inside pipe =   13.37(In.)
Critical depth could not be calculated.
Pipe flow velocity =     26.31(Ft/s)
Travel time through pipe =    0.17 min.
Time of concentration (TC) =     9.61 min.


++++++++++++++++++++++++++++++++++++++++++++++++++++++++++++++++++++++
Process from Point/Station      627.000 to Point/Station      623.000
**** CONFLUENCE OF MAIN STREAMS ****
______________________________________________________________________
The following data inside Main Stream is listed:
In Main Stream number: 2
Stream flow area =      8.680(Ac.)
Runoff from this stream =     25.104(CFS)
Time of concentration =    9.61 min.
```

```
Rainfall intensity =     5.014(In/Hr)
Program is now starting with Main Stream No. 3


++++++++++++++++++++++++++++++++++++++++++++++++++++++++++++++++++++++
Process from Point/Station      628.000 to Point/Station      629.000
**** INITIAL AREA EVALUATION ****
______________________________________________________________________
Decimal fraction soil group A = 0.000
Decimal fraction soil group B = 0.000
Decimal fraction soil group C = 0.000
Decimal fraction soil group D = 1.000
[MEDIUM DENSITY RESIDENTIAL                    ]
(7.3 DU/A or Less       )
Impervious value, Ai = 0.400
Sub-Area C Value = 0.570
Initial subarea total flow distance  =  105.000(Ft.)
Highest elevation =  208.000(Ft.)
Lowest elevation =  206.000(Ft.)
Elevation difference =    2.000(Ft.) Slope =  1.905 %
INITIAL AREA TIME OF CONCENTRATION CALCULATIONS:
The maximum overland flow distance is 80.00 (Ft)
for the top area slope value of   1.91 %, in a development type of
 7.3 DU/A or Less
In Accordance With Table 3-2
Initial Area Time of Concentration =   7.40 minutes
 (for slope value of   2.00 %)
Rainfall intensity (I) =      5.934(In/Hr) for a   100.0 year storm
Effective runoff coefficient used for area (Q=KCIA) is C = 0.570
Subarea runoff =      0.913(CFS)
Total initial stream area =        0.270(Ac.)


++++++++++++++++++++++++++++++++++++++++++++++++++++++++++++++++++++++
Process from Point/Station      629.000 to Point/Station      630.000
**** STREET FLOW TRAVEL TIME + SUBAREA FLOW ADDITION ****
______________________________________________________________________
Top of street segment elevation =   206.000(Ft.)
End of street segment elevation =   178.000(Ft.)
Length of street segment  =   730.000(Ft.)
Height of curb above gutter flowline  =    6.0(In.)
Width of half street (curb to crown)  =  22.000(Ft.)
Distance from crown to crossfall grade break  =  18.000(Ft.)
Slope from gutter to grade break (v/hz) =   0.020
Slope from grade break to crown (v/hz)  =   0.020
Street flow is on [1] side(s) of the street
Distance from curb to property line  =  10.000(Ft.)
Slope from curb to property line (v/hz) =   0.020
Gutter width =   1.500(Ft.)
Gutter hike from flowline =  1.500(In.)
 Manning's N in gutter =  0.0150
 Manning's N from gutter to grade break =  0.0180
 Manning's N from grade break to crown =  0.0180
Estimated mean flow rate at midpoint of street =      7.435(CFS)
Depth of flow =   0.354(Ft.), Average velocity =   4.266(Ft/s)
Streetflow hydraulics at midpoint of street travel:
Halfstreet flow width =  12.930(Ft.)
Flow velocity =   4.27(Ft/s)
Travel time =    2.85 min.     TC =   10.25  min.
 Adding area flow to street
```

```
Decimal fraction soil group A = 0.000
Decimal fraction soil group B = 0.000
Decimal fraction soil group C = 0.000
Decimal fraction soil group D = 1.000
[MEDIUM DENSITY RESIDENTIAL                    ]
(7.3 DU/A or Less       )
Impervious value, Ai = 0.400
Sub-Area C Value = 0.570
Rainfall intensity =      4.808(In/Hr) for a   100.0 year storm
Effective runoff coefficient used for total area
(Q=KCIA) is C = 0.570  CA =      2.890
Subarea runoff =     12.982(CFS) for      4.800(Ac.)
Total runoff =     13.896(CFS)  Total area =       5.070(Ac.)
Street flow at end of street =     13.896(CFS)
Half street flow at end of street =     13.896(CFS)
Depth of flow =   0.426(Ft.), Average velocity =   4.956(Ft/s)
Flow width (from curb towards crown)=  16.530(Ft.)


++++++++++++++++++++++++++++++++++++++++++++++++++++++++++++++++++++++
Process from Point/Station      630.000 to Point/Station      623.000
**** PIPEFLOW TRAVEL TIME (Program estimated size) ****
______________________________________________________________________
Upstream point/station elevation =   178.000(Ft.)
Downstream point/station elevation =   149.000(Ft.)
Pipe length  =   300.00(Ft.)   Manning's N = 0.013
No. of pipes = 1  Required pipe flow  =    13.896(CFS)
Nearest computed pipe diameter  =     15.00(In.)
Calculated individual pipe flow  =    13.896(CFS)
Normal flow depth in pipe =    9.18(In.)
Flow top width inside pipe =   14.62(In.)
Critical depth could not be calculated.
Pipe flow velocity =     17.66(Ft/s)
Travel time through pipe =    0.28 min.
Time of concentration (TC) =    10.54 min.


++++++++++++++++++++++++++++++++++++++++++++++++++++++++++++++++++++++
Process from Point/Station      630.000 to Point/Station      623.000
**** CONFLUENCE OF MAIN STREAMS ****
______________________________________________________________________
The following data inside Main Stream is listed:
In Main Stream number: 3
Stream flow area =      5.070(Ac.)
Runoff from this stream =     13.896(CFS)
Time of concentration =   10.54 min.
Rainfall intensity =     4.725(In/Hr)
Summary of stream data:

Stream   Flow rate      TC            Rainfall Intensity
 No.       (CFS)       (min)                 (In/Hr)


1      140.560      7.41          5.927
2       25.104      9.61          5.014
3       13.896     10.54          4.725
Qmax(1) =
         1.000 *    1.000 *   140.560) +
         1.000 *    0.772 *    25.104) +
         1.000 *    0.704 *    13.896) + =     169.706
```

```
Qmax(2) =
          0.846 *    1.000 *   140.560) +
          1.000 *    1.000 *    25.104) +
          1.000 *    0.912 *    13.896) + =     156.686
Qmax(3) =
          0.797 *    1.000 *   140.560) +
          0.942 *    1.000 *    25.104) +
          1.000 *    1.000 *    13.896) + =     149.586

Total of 3 main streams to confluence:
Flow rates before confluence point:
     140.560      25.104      13.896
Maximum flow rates at confluence using above data:
      169.706      156.686      149.586
Area of streams before confluence:
       49.410        8.680        5.070


Results of confluence:
Total flow rate =    169.706(CFS)
Time of concentration =     7.412 min.
Effective stream area after confluence  =     63.160(Ac.)


++++++++++++++++++++++++++++++++++++++++++++++++++++++++++++++++++++++
Process from Point/Station      623.000 to Point/Station      631.000
**** PIPEFLOW TRAVEL TIME (Program estimated size) ****
______________________________________________________________________
Upstream point/station elevation =   149.000(Ft.)
Downstream point/station elevation =   126.000(Ft.)
Pipe length  =   440.00(Ft.)   Manning's N = 0.013
No. of pipes = 1  Required pipe flow  =   169.706(CFS)
Nearest computed pipe diameter  =     39.00(In.)
Calculated individual pipe flow  =   169.706(CFS)
Normal flow depth in pipe =   28.88(In.)
Flow top width inside pipe =   34.20(In.)
Critical depth could not be calculated.
Pipe flow velocity =     25.75(Ft/s)
Travel time through pipe =    0.28 min.
Time of concentration (TC) =     7.70 min.


++++++++++++++++++++++++++++++++++++++++++++++++++++++++++++++++++++++
Process from Point/Station      623.000 to Point/Station      631.000
**** SUBAREA FLOW ADDITION ****
______________________________________________________________________
Decimal fraction soil group A = 0.000
Decimal fraction soil group B = 0.000
Decimal fraction soil group C = 0.000
Decimal fraction soil group D = 1.000
[UNDISTURBED NATURAL TERRAIN                    ]
(Permanent Open Space   )
Impervious value, Ai = 0.000
Sub-Area C Value = 0.350
Time of concentration =     7.70 min.
Rainfall intensity =      5.785(In/Hr) for a   100.0 year storm
Effective runoff coefficient used for total area
(Q=KCIA) is C = 0.492  CA =     32.703
Subarea runoff =     19.477(CFS) for      3.290(Ac.)
Total runoff =    189.184(CFS)  Total area =      66.450(Ac.)
```

```
++++++++++++++++++++++++++++++++++++++++++++++++++++++++++++++++++++++
Process from Point/Station      631.000 to Point/Station      632.000
**** IMPROVED CHANNEL TRAVEL TIME ****
______________________________________________________________________
Upstream point elevation =   126.000(Ft.)
Downstream point elevation =    91.000(Ft.)
Channel length thru subarea  =  1155.000(Ft.)
Channel base width =    5.000(Ft.)
Slope or 'Z' of left channel bank =   3.000
Slope or 'Z' of right channel bank =   3.000
Estimated mean flow rate at midpoint of channel =    189.209(CFS)
Manning's 'N'    = 0.045
Maximum depth of channel  =    5.000(Ft.)
Flow(q) thru subarea =    189.209(CFS)
Depth of flow =   2.257(Ft.), Average velocity =   7.120(Ft/s)
Channel flow top width =   18.544(Ft.)
Flow Velocity =    7.12(Ft/s)
Travel time  =    2.70 min.
Time of concentration =   10.40 min.
Critical depth =      2.313(Ft.)
 Adding area flow to channel
Decimal fraction soil group A = 0.000
Decimal fraction soil group B = 0.000
Decimal fraction soil group C = 0.000
Decimal fraction soil group D = 1.000
[UNDISTURBED NATURAL TERRAIN                  ]
(Permanent Open Space   )
Impervious value, Ai = 0.000
Sub-Area C Value = 0.350
The area added to the existing stream causes a
a lower flow rate of Q =    186.560(CFS)
therefore the upstream flow rate of Q =    189.184(CFS) is being used
Rainfall intensity =      4.764(In/Hr) for a   100.0 year storm
Effective runoff coefficient used for total area
(Q=KCIA) is C = 0.461  CA =     39.160
Subarea runoff =      0.000(CFS) for     18.450(Ac.)
Total runoff =    189.184(CFS)  Total area =      84.900(Ac.)
Depth of flow =   2.257(Ft.), Average velocity =   7.120(Ft/s)
Critical depth =      2.313(Ft.)


++++++++++++++++++++++++++++++++++++++++++++++++++++++++++++++++++++++
Process from Point/Station      631.000 to Point/Station      632.000
**** CONFLUENCE OF MINOR STREAMS ****
______________________________________________________________________
Along Main Stream number: 1 in normal stream number 1
Stream flow area =     84.900(Ac.)
Runoff from this stream =    189.184(CFS)
Time of concentration =   10.40 min.
Rainfall intensity =     4.764(In/Hr)


++++++++++++++++++++++++++++++++++++++++++++++++++++++++++++++++++++++
Process from Point/Station      640.000 to Point/Station      642.000
**** INITIAL AREA EVALUATION ****
______________________________________________________________________
Decimal fraction soil group A = 0.000
Decimal fraction soil group B = 0.000
```

```
Decimal fraction soil group C = 0.000
Decimal fraction soil group D = 1.000
[UNDISTURBED NATURAL TERRAIN                    ]
(Permanent Open Space   )
Impervious value, Ai = 0.000
Sub-Area C Value = 0.350
Initial subarea total flow distance  =  111.000(Ft.)
Highest elevation =  138.000(Ft.)
Lowest elevation =  116.000(Ft.)
Elevation difference =   22.000(Ft.) Slope = 19.820 %
INITIAL AREA TIME OF CONCENTRATION CALCULATIONS:
The maximum overland flow distance is 100.00 (Ft)
for the top area slope value of  19.81 %, in a development type of
 Permanent Open Space
In Accordance With Figure 3-3
Initial Area Time of Concentration =   4.99 minutes
TC = [1.8*(1.1-C)*distance(Ft.)^.5)/(% slope^(1/3)]
TC = [1.8*(1.1-0.3500)*( 100.000^.5)/(  19.810^(1/3)]=   4.99
The initial area total distance of  111.00 (Ft.) entered leaves a
remaining distance of   11.00 (Ft.)
Using Figure 3-4, the travel time for this distance is   0.09 minutes
for a distance of  11.00 (Ft.) and a slope of 19.81 %
with an elevation difference of   2.18(Ft.) from the end of the top area
Tt = [11.9*length(Mi)^3)/(elevation change(Ft.))]^.385 *60(min/hr)
 =    0.092 Minutes
Tt=[(11.9*0.0021^3)/(  2.18)]^.385=  0.09
Total initial area Ti =   4.99 minutes from Figure 3-3 formula plus
  0.09 minutes from the Figure 3-4 formula =   5.08 minutes
Rainfall intensity (I) =      7.561(In/Hr) for a   100.0 year storm
Effective runoff coefficient used for area (Q=KCIA) is C = 0.350
Subarea runoff =     15.932(CFS)
Total initial stream area =        6.020(Ac.)


++++++++++++++++++++++++++++++++++++++++++++++++++++++++++++++++++++++
Process from Point/Station      642.000 to Point/Station      632.000
**** CONFLUENCE OF MINOR STREAMS ****
______________________________________________________________________
Along Main Stream number: 1 in normal stream number 2
Stream flow area =      6.020(Ac.)
Runoff from this stream =     15.932(CFS)
Time of concentration =    5.08 min.
Rainfall intensity =     7.561(In/Hr)
Summary of stream data:

Stream   Flow rate      TC            Rainfall Intensity
 No.       (CFS)       (min)                 (In/Hr)


1      189.184     10.40          4.764
2       15.932      5.08          7.561
Qmax(1) =
         1.000 *    1.000 *   189.184) +
         0.630 *    1.000 *    15.932) + =     199.221
Qmax(2) =
         1.000 *    0.489 *   189.184) +
         1.000 *    1.000 *    15.932) + =     108.366

Total of 2 streams to confluence:
Flow rates before confluence point:
```

```
     189.184      15.932
Maximum flow rates at confluence using above data:
      199.221      108.366
Area of streams before confluence:
       84.900        6.020
Results of confluence:
Total flow rate =    199.221(CFS)
Time of concentration =    10.400 min.
Effective stream area after confluence =     90.920(Ac.)
End of computations, total study area =          90.920 (Ac.)
```

3

# APPENDIX 3

## Proposed Conditions Rational Method Computer Output

San Diego County Rational Hydrology Program

CIVILCADD/CIVILDESIGN Engineering Software,(c)1991-2004 Version 7.4

Rational method hydrology program based on
San Diego County Flood Control Division 2003 hydrology manual
Rational Hydrology Study Date: 02/23/12

---

2468 QUARRY CREEK
PROPOSED CONDITIONS
SYSTEM 100
FILE: S100P100

---

********* Hydrology Study Control Information **********

---

Program License Serial Number 4049

---

Rational hydrology study storm event year is 100.0
English (in-lb) input data Units used

Map data precipitation entered:
6 hour, precipitation(inches) = 2.900
24 hour precipitation(inches) = 5.100
P6/P24 = 56.9%
San Diego hydrology manual 'C' values used

++++++++++++++++++++++++++++++++++++++++++++++++++++++++++++++++++++++
Process from Point/Station 100.000 to Point/Station 101.000
**** INITIAL AREA EVALUATION ****

---

Decimal fraction soil group A = 0.000
Decimal fraction soil group B = 0.000
Decimal fraction soil group C = 0.000
Decimal fraction soil group D = 1.000
[INDUSTRIAL area type ]
(Limited Industrial )
Impervious value, Ai = 0.900
Sub-Area C Value = 0.850
Initial subarea total flow distance = 100.000(Ft.)
Highest elevation = 385.700(Ft.)
Lowest elevation = 384.800(Ft.)
Elevation difference = 0.900(Ft.) Slope = 0.900 %
INITIAL AREA TIME OF CONCENTRATION CALCULATIONS:
The maximum overland flow distance is 60.00 (Ft)
for the top area slope value of 0.90 %, in a development type of
Limited Industrial
In Accordance With Figure 3-3
Initial Area Time of Concentration = 3.61 minutes
TC = [1.8*(1.1-C)*distance(Ft.)^.5)/(% slope^(1/3)]
TC = [1.8*(1.1-0.8500)*( 60.000^.5)/( 0.900^(1/3)]= 3.61
Calculated TC of 3.610 minutes is less than 5 minutes,

```
 resetting TC to 5.0 minutes for rainfall intensity calculations
Rainfall intensity (I) =      7.641(In/Hr) for a   100.0 year storm
Effective runoff coefficient used for area (Q=KCIA) is C = 0.850
Subarea runoff =      1.494(CFS)
Total initial stream area =        0.230(Ac.)


++++++++++++++++++++++++++++++++++++++++++++++++++++++++++++++++++++++
Process from Point/Station      101.000 to Point/Station      101.100
**** IMPROVED CHANNEL TRAVEL TIME ****
______________________________________________________________________
Upstream point elevation =   384.800(Ft.)
Downstream point elevation =   368.000(Ft.)
Channel length thru subarea  =   107.000(Ft.)
Channel base width      =   10.000(Ft.)
Slope or 'Z' of left channel bank =  10.000
Slope or 'Z' of right channel bank =  10.000
Estimated mean flow rate at midpoint of channel =      1.494(CFS)
Manning's 'N'    = 0.035
Maximum depth of channel  =    1.000(Ft.)
Flow(q) thru subarea =      1.494(CFS)
Depth of flow =   0.058(Ft.), Average velocity =   2.433(Ft/s)
Channel flow top width =   11.161(Ft.)
Flow Velocity =    2.43(Ft/s)
Travel time  =    0.73 min.
Time of concentration =    4.34 min.
Critical depth =      0.086(Ft.)
 Adding area flow to channel
Decimal fraction soil group A = 0.000
Decimal fraction soil group B = 0.000
Decimal fraction soil group C = 0.000
Decimal fraction soil group D = 1.000
[COMMERCIAL area type                        ]
(General Commercial    )
Impervious value, Ai = 0.850
Sub-Area C Value = 0.820
Rainfall intensity =      7.641(In/Hr) for a   100.0 year storm
Effective runoff coefficient used for total area
(Q=KCIA) is C = 0.850  CA =      0.196
Subarea runoff =      0.000(CFS) for      0.000(Ac.)
Total runoff =      1.494(CFS)      Total area =       0.230(Ac.)
Depth of flow =   0.058(Ft.), Average velocity =   2.433(Ft/s)
Critical depth =      0.086(Ft.)


++++++++++++++++++++++++++++++++++++++++++++++++++++++++++++++++++++++
Process from Point/Station      101.100 to Point/Station      102.000
**** STREET FLOW TRAVEL TIME + SUBAREA FLOW ADDITION ****
______________________________________________________________________
Top of street segment elevation =   368.000(Ft.)
End of street segment elevation =   340.000(Ft.)
Length of street segment  =   910.000(Ft.)
Height of curb above gutter flowline  =    6.0(In.)
Width of half street (curb to crown)  =  22.000(Ft.)
Distance from crown to crossfall grade break  =  18.000(Ft.)
Slope from gutter to grade break (v/hz) =   0.020
Slope from grade break to crown (v/hz)  =   0.020
```

```
Street flow is on [1] side(s) of the street
Distance from curb to property line  =  10.000(Ft.)
Slope from curb to property line (v/hz) =   0.020
Gutter width =   1.500(Ft.)
Gutter hike from flowline =  1.500(In.)
 Manning's N in gutter =  0.0150
 Manning's N from gutter to grade break =  0.0180
 Manning's N from grade break to crown =  0.0180
Estimated mean flow rate at midpoint of street =     21.676(CFS)
Depth of flow =   0.506(Ft.), Average velocity =   5.054(Ft/s)
Warning: depth of flow exceeds top of curb
Distance that curb overflow reaches into property =    0.28(Ft.)
Streetflow hydraulics at midpoint of street travel:
Halfstreet flow width =  20.535(Ft.)
Flow velocity =   5.05(Ft/s)
Travel time =    3.00 min.     TC =    7.34  min.
 Adding area flow to street
Decimal fraction soil group A = 0.000
Decimal fraction soil group B = 0.000
Decimal fraction soil group C = 0.000
Decimal fraction soil group D = 1.000
[COMMERCIAL area type                        ]
(General Commercial    )
Impervious value, Ai = 0.850
Sub-Area C Value = 0.820
Rainfall intensity =      5.963(In/Hr) for a   100.0 year storm
Effective runoff coefficient used for total area
(Q=KCIA) is C = 0.821  CA =      7.010
Subarea runoff =     40.302(CFS) for      8.310(Ac.)
Total runoff =     41.796(CFS)      Total area =       8.540(Ac.)
Street flow at end of street =     41.796(CFS)
Half street flow at end of street =     41.796(CFS)
Depth of flow =   0.615(Ft.), Average velocity =   5.969(Ft/s)
Warning: depth of flow exceeds top of curb
Note:  depth of flow exceeds top of street crown.
Distance that curb overflow reaches into property =    5.75(Ft.)
Flow width (from curb towards crown)=  22.000(Ft.)


++++++++++++++++++++++++++++++++++++++++++++++++++++++++++++++++++++++
Process from Point/Station      102.000 to Point/Station      103.000
**** PIPEFLOW TRAVEL TIME (Program estimated size) ****
______________________________________________________________________
Upstream point/station elevation =   340.000(Ft.)
Downstream point/station elevation =   320.000(Ft.)
Pipe length  =   345.00(Ft.)   Manning's N = 0.013
No. of pipes = 1  Required pipe flow  =    41.796(CFS)
Nearest computed pipe diameter  =     24.00(In.)
Calculated individual pipe flow  =    41.796(CFS)
Normal flow depth in pipe =   15.75(In.)
Flow top width inside pipe =   22.80(In.)
Critical depth could not be calculated.
Pipe flow velocity =     19.11(Ft/s)
Travel time through pipe =    0.30 min.
Time of concentration (TC) =     7.65 min.
```

```
++++++++++++++++++++++++++++++++++++++++++++++++++++++++++++++++++++++
Process from Point/Station      102.000 to Point/Station      103.000
**** SUBAREA FLOW ADDITION ****
______________________________________________________________________
Decimal fraction soil group A = 0.000
Decimal fraction soil group B = 0.000
Decimal fraction soil group C = 0.000
Decimal fraction soil group D = 1.000
[COMMERCIAL area type                        ]
(General Commercial    )
Impervious value, Ai = 0.850
Sub-Area C Value = 0.820
Time of concentration =     7.65 min.
Rainfall intensity =      5.810(In/Hr) for a   100.0 year storm
Effective runoff coefficient used for total area
(Q=KCIA) is C = 0.821  CA =     10.331
Subarea runoff =     18.227(CFS) for      4.050(Ac.)
Total runoff =     60.023(CFS)      Total area =      12.590(Ac.)


++++++++++++++++++++++++++++++++++++++++++++++++++++++++++++++++++++++
Process from Point/Station      103.000 to Point/Station      104.000
**** IMPROVED CHANNEL TRAVEL TIME ****
______________________________________________________________________
Upstream point elevation =   320.000(Ft.)
Downstream point elevation =   298.000(Ft.)
Channel length thru subarea  =   265.000(Ft.)
Channel base width      =   10.000(Ft.)
Slope or 'Z' of left channel bank =   3.000
Slope or 'Z' of right channel bank =   3.000
Estimated mean flow rate at midpoint of channel =     62.489(CFS)
Manning's 'N'    = 0.060
Maximum depth of channel  =    1.000(Ft.)
Flow(q) thru subarea =     62.489(CFS)
Depth of flow =   0.873(Ft.), Average velocity =   5.676(Ft/s)
Channel flow top width =   15.235(Ft.)
Flow Velocity =    5.68(Ft/s)
Travel time  =    0.78 min.
Time of concentration =    8.42 min.
Critical depth =      0.969(Ft.)
 Adding area flow to channel
Decimal fraction soil group A = 0.000
Decimal fraction soil group B = 0.000
Decimal fraction soil group C = 0.000
Decimal fraction soil group D = 1.000
[UNDISTURBED NATURAL TERRAIN                 ]
(Permanent Open Space   )
Impervious value, Ai = 0.000
Sub-Area C Value = 0.350
Rainfall intensity =      5.458(In/Hr) for a   100.0 year storm
Effective runoff coefficient used for total area
(Q=KCIA) is C = 0.698  CA =     11.888
Subarea runoff =      4.863(CFS) for      4.450(Ac.)
Total runoff =     64.886(CFS)      Total area =      17.040(Ac.)
Depth of flow =   0.891(Ft.), Average velocity =   5.745(Ft/s)
Critical depth =      0.984(Ft.)
```

```
++++++++++++++++++++++++++++++++++++++++++++++++++++++++++++++++++++++
Process from Point/Station       104.000 to Point/Station       105.000
**** PIPEFLOW TRAVEL TIME (Program estimated size) ****
______________________________________________________________________
Upstream point/station elevation =   298.000(Ft.)
Downstream point/station elevation =   296.000(Ft.)
Pipe length  =    95.00(Ft.)   Manning's N = 0.013
No. of pipes = 1  Required pipe flow  =    64.886(CFS)
Nearest computed pipe diameter  =     33.00(In.)
Calculated individual pipe flow  =    64.886(CFS)
Normal flow depth in pipe =   23.27(In.)
Flow top width inside pipe =   30.09(In.)
Critical Depth =   30.55(In.)
Pipe flow velocity =     14.49(Ft/s)
Travel time through pipe =    0.11 min.
Time of concentration (TC) =     8.53 min.


++++++++++++++++++++++++++++++++++++++++++++++++++++++++++++++++++++++
Process from Point/Station       104.000 to Point/Station       105.000
**** CONFLUENCE OF MAIN STREAMS ****
______________________________________________________________________
The following data inside Main Stream is listed:
In Main Stream number: 1
Stream flow area =     17.040(Ac.)
Runoff from this stream =     64.886(CFS)
Time of concentration =    8.53 min.
Rainfall intensity =     5.413(In/Hr)
Program is now starting with Main Stream No. 2


++++++++++++++++++++++++++++++++++++++++++++++++++++++++++++++++++++++
Process from Point/Station       106.000 to Point/Station       107.000
**** INITIAL AREA EVALUATION ****
______________________________________________________________________
Decimal fraction soil group A = 0.000
Decimal fraction soil group B = 0.000
Decimal fraction soil group C = 0.000
Decimal fraction soil group D = 1.000
[MEDIUM DENSITY RESIDENTIAL                    ]
(10.9 DU/A or Less       )
Impervious value, Ai = 0.450
Sub-Area C Value = 0.600
Initial subarea total flow distance  =  130.000(Ft.)
Highest elevation =  334.000(Ft.)
Lowest elevation =  332.700(Ft.)
Elevation difference =    1.300(Ft.) Slope =  1.000 %
INITIAL AREA TIME OF CONCENTRATION CALCULATIONS:
The maximum overland flow distance is 65.00 (Ft)
for the top area slope value of   1.00 %, in a development type of
 10.9 DU/A or Less
In Accordance With Table 3-2
Initial Area Time of Concentration =   7.90 minutes
 (for slope value of   1.00 %)
Rainfall intensity (I) =      5.689(In/Hr) for a   100.0 year storm
Effective runoff coefficient used for area (Q=KCIA) is C = 0.600
```

```
Subarea runoff =       1.502(CFS)
Total initial stream area =        0.440(Ac.)


++++++++++++++++++++++++++++++++++++++++++++++++++++++++++++++++++++++
Process from Point/Station      107.000 to Point/Station      105.000
**** STREET FLOW TRAVEL TIME + SUBAREA FLOW ADDITION ****
______________________________________________________________________
Top of street segment elevation =   332.700(Ft.)
End of street segment elevation =   296.000(Ft.)
Length of street segment  =   710.000(Ft.)
Height of curb above gutter flowline  =    6.0(In.)
Width of half street (curb to crown)  =  22.000(Ft.)
Distance from crown to crossfall grade break  =  18.000(Ft.)
Slope from gutter to grade break (v/hz) =   0.020
Slope from grade break to crown (v/hz)  =   0.020
Street flow is on [1] side(s) of the street
Distance from curb to property line  =  10.000(Ft.)
Slope from curb to property line (v/hz) =   0.020
Gutter width =   1.500(Ft.)
Gutter hike from flowline =  1.500(In.)
 Manning's N in gutter =  0.0150
 Manning's N from gutter to grade break =  0.0180
 Manning's N from grade break to crown =  0.0180
Estimated mean flow rate at midpoint of street =      6.015(CFS)
Depth of flow =   0.319(Ft.), Average velocity =   4.547(Ft/s)
Streetflow hydraulics at midpoint of street travel:
Halfstreet flow width =  11.187(Ft.)
Flow velocity =   4.55(Ft/s)
Travel time =    2.60 min.     TC =   10.50  min.
 Adding area flow to street
Decimal fraction soil group A = 0.000
Decimal fraction soil group B = 0.000
Decimal fraction soil group C = 0.000
Decimal fraction soil group D = 1.000
[MEDIUM DENSITY RESIDENTIAL                  ]
(10.9 DU/A or Less      )
Impervious value, Ai = 0.450
Sub-Area C Value = 0.600
Rainfall intensity =      4.734(In/Hr) for a   100.0 year storm
Effective runoff coefficient used for total area
(Q=KCIA) is C = 0.600  CA =      2.208
Subarea runoff =      8.951(CFS) for      3.240(Ac.)
Total runoff =     10.453(CFS)      Total area =       3.680(Ac.)
Street flow at end of street =     10.453(CFS)
Half street flow at end of street =     10.453(CFS)
Depth of flow =   0.374(Ft.), Average velocity =   5.183(Ft/s)
Flow width (from curb towards crown)=  13.948(Ft.)


++++++++++++++++++++++++++++++++++++++++++++++++++++++++++++++++++++++
Process from Point/Station      107.000 to Point/Station      105.000
**** CONFLUENCE OF MAIN STREAMS ****
______________________________________________________________________
The following data inside Main Stream is listed:
In Main Stream number: 2
Stream flow area =      3.680(Ac.)
```

```
Runoff from this stream =      10.453(CFS)
Time of concentration =   10.50 min.
Rainfall intensity =     4.734(In/Hr)
Summary of stream data:

Stream   Flow rate      TC            Rainfall Intensity
 No.       (CFS)       (min)                 (In/Hr)


1       64.886      8.53                5.413
2       10.453     10.50                4.734
Qmax(1) =
         1.000 *    1.000 *    64.886) +
         1.000 *    0.812 *    10.453) + =      73.379
Qmax(2) =
         0.875 *    1.000 *    64.886) +
         1.000 *    1.000 *    10.453) + =      67.203

Total of 2 main streams to confluence:
Flow rates before confluence point:
      64.886      10.453
Maximum flow rates at confluence using above data:
       73.379       67.203
Area of streams before confluence:
       17.040        3.680


Results of confluence:
Total flow rate =      73.379(CFS)
Time of concentration =     8.533 min.
Effective stream area after confluence  =     20.720(Ac.)


++++++++++++++++++++++++++++++++++++++++++++++++++++++++++++++++++++++
Process from Point/Station      105.000 to Point/Station      108.000
**** PIPEFLOW TRAVEL TIME (Program estimated size) ****
______________________________________________________________________
Upstream point/station elevation =   296.000(Ft.)
Downstream point/station elevation =   288.000(Ft.)
Pipe length  =   240.00(Ft.)   Manning's N = 0.013
No. of pipes = 1  Required pipe flow  =    73.379(CFS)
Nearest computed pipe diameter  =     30.00(In.)
Calculated individual pipe flow  =    73.379(CFS)
Normal flow depth in pipe =   24.05(In.)
Flow top width inside pipe =   23.93(In.)
Critical depth could not be calculated.
Pipe flow velocity =     17.39(Ft/s)
Travel time through pipe =    0.23 min.
Time of concentration (TC) =     8.76 min.


++++++++++++++++++++++++++++++++++++++++++++++++++++++++++++++++++++++
Process from Point/Station      105.000 to Point/Station      108.000
**** CONFLUENCE OF MAIN STREAMS ****
______________________________________________________________________
The following data inside Main Stream is listed:
In Main Stream number: 1
```

```
Stream flow area =     20.720(Ac.)
Runoff from this stream =     73.379(CFS)
Time of concentration =    8.76 min.
Rainfall intensity =     5.321(In/Hr)
Program is now starting with Main Stream No. 2


++++++++++++++++++++++++++++++++++++++++++++++++++++++++++++++++++++++
Process from Point/Station      109.000 to Point/Station      110.000
**** INITIAL AREA EVALUATION ****
______________________________________________________________________
Decimal fraction soil group A = 0.000
Decimal fraction soil group B = 0.000
Decimal fraction soil group C = 0.000
Decimal fraction soil group D = 1.000
[MEDIUM DENSITY RESIDENTIAL                    ]
(7.3 DU/A or Less       )
Impervious value, Ai = 0.400
Sub-Area C Value = 0.570
Initial subarea total flow distance  =   70.000(Ft.)
Highest elevation =  328.700(Ft.)
Lowest elevation =  328.000(Ft.)
Elevation difference =    0.700(Ft.) Slope =  1.000 %
INITIAL AREA TIME OF CONCENTRATION CALCULATIONS:
The maximum overland flow distance is 65.00 (Ft)
for the top area slope value of   1.00 %, in a development type of
 7.3 DU/A or Less
In Accordance With Table 3-2
Initial Area Time of Concentration =   8.40 minutes
 (for slope value of   1.00 %)
Rainfall intensity (I) =      5.468(In/Hr) for a   100.0 year storm
Effective runoff coefficient used for area (Q=KCIA) is C = 0.570
Subarea runoff =      0.530(CFS)
Total initial stream area =        0.170(Ac.)


++++++++++++++++++++++++++++++++++++++++++++++++++++++++++++++++++++++
Process from Point/Station      110.000 to Point/Station      108.000
**** STREET FLOW TRAVEL TIME + SUBAREA FLOW ADDITION ****
______________________________________________________________________
Top of street segment elevation =   328.000(Ft.)
End of street segment elevation =   288.000(Ft.)
Length of street segment  =  1110.000(Ft.)
Height of curb above gutter flowline  =    6.0(In.)
Width of half street (curb to crown)  =  22.000(Ft.)
Distance from crown to crossfall grade break  =  18.000(Ft.)
Slope from gutter to grade break (v/hz) =   0.020
Slope from grade break to crown (v/hz)  =   0.020
Street flow is on [1] side(s) of the street
Distance from curb to property line  =  10.000(Ft.)
Slope from curb to property line (v/hz) =   0.020
Gutter width =   1.500(Ft.)
Gutter hike from flowline =  1.500(In.)
 Manning's N in gutter =  0.0150
 Manning's N from gutter to grade break =  0.0180
 Manning's N from grade break to crown =  0.0180
Estimated mean flow rate at midpoint of street =      6.419(CFS)
```

```
Depth of flow =   0.342(Ft.), Average velocity =   4.023(Ft/s)
Streetflow hydraulics at midpoint of street travel:
Halfstreet flow width =  12.347(Ft.)
Flow velocity =   4.02(Ft/s)
Travel time =    4.60 min.     TC =   13.00  min.
 Adding area flow to street
Decimal fraction soil group A = 0.000
Decimal fraction soil group B = 0.000
Decimal fraction soil group C = 0.000
Decimal fraction soil group D = 1.000
[MEDIUM DENSITY RESIDENTIAL                  ]
(7.3 DU/A or Less       )
Impervious value, Ai = 0.400
Sub-Area C Value = 0.570
Rainfall intensity =      4.126(In/Hr) for a   100.0 year storm
Effective runoff coefficient used for total area
(Q=KCIA) is C = 0.570  CA =      2.964
Subarea runoff =     11.699(CFS) for      5.030(Ac.)
Total runoff =     12.229(CFS)      Total area =       5.200(Ac.)
Street flow at end of street =     12.229(CFS)
Half street flow at end of street =     12.229(CFS)
Depth of flow =   0.413(Ft.), Average velocity =   4.693(Ft/s)
Flow width (from curb towards crown)=  15.920(Ft.)


++++++++++++++++++++++++++++++++++++++++++++++++++++++++++++++++++++++
Process from Point/Station      110.000 to Point/Station      108.000
**** CONFLUENCE OF MAIN STREAMS ****
______________________________________________________________________
The following data inside Main Stream is listed:
In Main Stream number: 2
Stream flow area =      5.200(Ac.)
Runoff from this stream =     12.229(CFS)
Time of concentration =   13.00 min.
Rainfall intensity =     4.126(In/Hr)
Summary of stream data:

Stream   Flow rate      TC            Rainfall Intensity
 No.       (CFS)       (min)                 (In/Hr)


1       73.379      8.76                5.321
2       12.229     13.00                4.126
Qmax(1) =
         1.000 *    1.000 *    73.379) +
         1.000 *    0.674 *    12.229) + =      81.622
Qmax(2) =
         0.775 *    1.000 *    73.379) +
         1.000 *    1.000 *    12.229) + =      69.126

Total of 2 main streams to confluence:
Flow rates before confluence point:
      73.379      12.229
Maximum flow rates at confluence using above data:
       81.622       69.126
Area of streams before confluence:
       20.720        5.200
```

```
Results of confluence:
Total flow rate =      81.622(CFS)
Time of concentration =      8.763 min.
Effective stream area after confluence  =      25.920(Ac.)


++++++++++++++++++++++++++++++++++++++++++++++++++++++++++++++++++++++
Process from Point/Station      108.000 to Point/Station      111.000
**** PIPEFLOW TRAVEL TIME (Program estimated size) ****
______________________________________________________________________
Upstream point/station elevation =   288.000(Ft.)
Downstream point/station elevation =   218.000(Ft.)
Pipe length  =   305.00(Ft.)   Manning's N = 0.013
No. of pipes = 1  Required pipe flow  =    81.622(CFS)
Nearest computed pipe diameter  =     24.00(In.)
Calculated individual pipe flow  =    81.622(CFS)
Normal flow depth in pipe =   15.56(In.)
Flow top width inside pipe =   22.92(In.)
Critical depth could not be calculated.
Pipe flow velocity =     37.90(Ft/s)
Travel time through pipe =    0.13 min.
Time of concentration (TC) =     8.90 min.


++++++++++++++++++++++++++++++++++++++++++++++++++++++++++++++++++++++
Process from Point/Station      111.000 to Point/Station      112.000
**** IMPROVED CHANNEL TRAVEL TIME ****
______________________________________________________________________
Upstream point elevation =   218.000(Ft.)
Downstream point elevation =   198.000(Ft.)
Channel length thru subarea  =   635.000(Ft.)
Channel base width      =    5.000(Ft.)
Slope or 'Z' of left channel bank =   2.000
Slope or 'Z' of right channel bank =   2.000
Estimated mean flow rate at midpoint of channel =     84.015(CFS)
Manning's 'N'    = 0.050
Maximum depth of channel  =    5.000(Ft.)
Flow(q) thru subarea =     84.015(CFS)
Depth of flow =   1.723(Ft.), Average velocity =   5.774(Ft/s)
Channel flow top width =   11.892(Ft.)
Flow Velocity =    5.77(Ft/s)
Travel time  =    1.83 min.
Time of concentration =   10.73 min.
Critical depth =      1.641(Ft.)
 Adding area flow to channel
Decimal fraction soil group A = 0.000
Decimal fraction soil group B = 0.000
Decimal fraction soil group C = 0.000
Decimal fraction soil group D = 1.000
[HIGH DENSITY RESIDENTIAL                    ]
(24.0 DU/A or Less      )
Impervious value, Ai = 0.650
Sub-Area C Value = 0.710
Rainfall intensity =      4.669(In/Hr) for a   100.0 year storm
Effective runoff coefficient used for total area
```

```
(Q=KCIA) is C = 0.662  CA =     18.494
Subarea runoff =      4.732(CFS) for      2.020(Ac.)
Total runoff =     86.354(CFS)      Total area =      27.940(Ac.)
Depth of flow =   1.747(Ft.), Average velocity =   5.818(Ft/s)
Critical depth =      1.672(Ft.)


++++++++++++++++++++++++++++++++++++++++++++++++++++++++++++++++++++++
Process from Point/Station      111.000 to Point/Station      112.000
**** CONFLUENCE OF MAIN STREAMS ****
______________________________________________________________________
The following data inside Main Stream is listed:
In Main Stream number: 1
Stream flow area =     27.940(Ac.)
Runoff from this stream =     86.354(CFS)
Time of concentration =   10.73 min.
Rainfall intensity =     4.669(In/Hr)
Program is now starting with Main Stream No. 2


++++++++++++++++++++++++++++++++++++++++++++++++++++++++++++++++++++++
Process from Point/Station      113.000 to Point/Station      114.000
**** INITIAL AREA EVALUATION ****
______________________________________________________________________
Decimal fraction soil group A = 0.000
Decimal fraction soil group B = 0.000
Decimal fraction soil group C = 0.000
Decimal fraction soil group D = 1.000
[UNDISTURBED NATURAL TERRAIN                    ]
(Permanent Open Space   )
Impervious value, Ai = 0.000
Sub-Area C Value = 0.350
Initial subarea total flow distance  =  115.000(Ft.)
Highest elevation =  337.000(Ft.)
Lowest elevation =  330.000(Ft.)
Elevation difference =    7.000(Ft.) Slope =  6.087 %
INITIAL AREA TIME OF CONCENTRATION CALCULATIONS:
The maximum overland flow distance is 100.00 (Ft)
for the top area slope value of   6.09 %, in a development type of
 Permanent Open Space
In Accordance With Table 3-2
Initial Area Time of Concentration =   8.70 minutes
 (for slope value of   5.00 %)
Rainfall intensity (I) =      5.345(In/Hr) for a   100.0 year storm
Effective runoff coefficient used for area (Q=KCIA) is C = 0.350
Subarea runoff =      0.281(CFS)
Total initial stream area =        0.150(Ac.)


++++++++++++++++++++++++++++++++++++++++++++++++++++++++++++++++++++++
Process from Point/Station      114.000 to Point/Station      115.000
**** IMPROVED CHANNEL TRAVEL TIME ****
______________________________________________________________________
Upstream point elevation =   330.000(Ft.)
Downstream point elevation =   240.000(Ft.)
Channel length thru subarea  =   420.000(Ft.)
Channel base width      =   10.000(Ft.)
```

```
Slope or 'Z' of left channel bank =  10.000
Slope or 'Z' of right channel bank =  10.000
Estimated mean flow rate at midpoint of channel =      1.517(CFS)
Manning's 'N'    = 0.050
Maximum depth of channel  =    1.000(Ft.)
Flow(q) thru subarea =      1.517(CFS)
Depth of flow =   0.066(Ft.), Average velocity =   2.157(Ft/s)
Channel flow top width =   11.319(Ft.)
Flow Velocity =    2.16(Ft/s)
Travel time  =    3.25 min.
Time of concentration =   11.95 min.
Critical depth =      0.087(Ft.)
 Adding area flow to channel
Decimal fraction soil group A = 0.000
Decimal fraction soil group B = 0.000
Decimal fraction soil group C = 0.000
Decimal fraction soil group D = 1.000
[UNDISTURBED NATURAL TERRAIN                  ]
(Permanent Open Space   )
Impervious value, Ai = 0.000
Sub-Area C Value = 0.350
Rainfall intensity =      4.357(In/Hr) for a   100.0 year storm
Effective runoff coefficient used for total area
(Q=KCIA) is C = 0.350  CA =      0.612
Subarea runoff =      2.388(CFS) for      1.600(Ac.)
Total runoff =      2.669(CFS)      Total area =       1.750(Ac.)
Depth of flow =   0.092(Ft.), Average velocity =   2.656(Ft/s)
Critical depth =      0.125(Ft.)


++++++++++++++++++++++++++++++++++++++++++++++++++++++++++++++++++++++
Process from Point/Station      115.000 to Point/Station      116.000
**** STREET FLOW TRAVEL TIME + SUBAREA FLOW ADDITION ****
______________________________________________________________________
Top of street segment elevation =   240.000(Ft.)
End of street segment elevation =   203.000(Ft.)
Length of street segment  =   900.000(Ft.)
Height of curb above gutter flowline  =    6.0(In.)
Width of half street (curb to crown)  =  22.000(Ft.)
Distance from crown to crossfall grade break  =  18.000(Ft.)
Slope from gutter to grade break (v/hz) =   0.020
Slope from grade break to crown (v/hz)  =   0.020
Street flow is on [1] side(s) of the street
Distance from curb to property line  =  10.000(Ft.)
Slope from curb to property line (v/hz) =   0.020
Gutter width =   1.500(Ft.)
Gutter hike from flowline =  1.500(In.)
 Manning's N in gutter =  0.0150
 Manning's N from gutter to grade break =  0.0180
 Manning's N from grade break to crown =  0.0180
Estimated mean flow rate at midpoint of street =     19.672(CFS)
Depth of flow =   0.468(Ft.), Average velocity =   5.536(Ft/s)
Streetflow hydraulics at midpoint of street travel:
Halfstreet flow width =  18.661(Ft.)
Flow velocity =   5.54(Ft/s)
Travel time =    2.71 min.     TC =   14.65  min.
 Adding area flow to street
```

```
Decimal fraction soil group A = 0.000
Decimal fraction soil group B = 0.000
Decimal fraction soil group C = 0.000
Decimal fraction soil group D = 1.000
[HIGH DENSITY RESIDENTIAL                    ]
(24.0 DU/A or Less      )
Impervious value, Ai = 0.650
Sub-Area C Value = 0.710
Rainfall intensity =      3.819(In/Hr) for a   100.0 year storm
Effective runoff coefficient used for total area
(Q=KCIA) is C = 0.666  CA =      9.622
Subarea runoff =     34.077(CFS) for     12.690(Ac.)
Total runoff =     36.745(CFS)      Total area =      14.440(Ac.)
Street flow at end of street =     36.745(CFS)
Half street flow at end of street =     36.745(CFS)
Depth of flow =   0.569(Ft.), Average velocity =   6.356(Ft/s)
Warning: depth of flow exceeds top of curb
Note:  depth of flow exceeds top of street crown.
Distance that curb overflow reaches into property =    3.45(Ft.)
Flow width (from curb towards crown)=  22.000(Ft.)


++++++++++++++++++++++++++++++++++++++++++++++++++++++++++++++++++++++
Process from Point/Station      116.000 to Point/Station      112.000
**** PIPEFLOW TRAVEL TIME (Program estimated size) ****
______________________________________________________________________
Upstream point/station elevation =   203.000(Ft.)
Downstream point/station elevation =   198.000(Ft.)
Pipe length  =   100.00(Ft.)   Manning's N = 0.013
No. of pipes = 1  Required pipe flow  =    36.745(CFS)
Nearest computed pipe diameter  =     24.00(In.)
Calculated individual pipe flow  =    36.745(CFS)
Normal flow depth in pipe =   15.16(In.)
Flow top width inside pipe =   23.15(In.)
Critical depth could not be calculated.
Pipe flow velocity =     17.56(Ft/s)
Travel time through pipe =    0.09 min.
Time of concentration (TC) =    14.75 min.


++++++++++++++++++++++++++++++++++++++++++++++++++++++++++++++++++++++
Process from Point/Station      116.000 to Point/Station      112.000
**** CONFLUENCE OF MAIN STREAMS ****
______________________________________________________________________
The following data inside Main Stream is listed:
In Main Stream number: 2
Stream flow area =     14.440(Ac.)
Runoff from this stream =     36.745(CFS)
Time of concentration =   14.75 min.
Rainfall intensity =     3.803(In/Hr)
Summary of stream data:

Stream   Flow rate      TC            Rainfall Intensity
 No.       (CFS)       (min)                 (In/Hr)


1       86.354     10.73                4.669
```

```
2        36.745     14.75                3.803
Qmax(1) =
         1.000 *    1.000 *    86.354) +
         1.000 *    0.727 *    36.745) + =     113.084
Qmax(2) =
         0.814 *    1.000 *    86.354) +
         1.000 *    1.000 *    36.745) + =     107.077

Total of 2 main streams to confluence:
Flow rates before confluence point:
      86.354      36.745
Maximum flow rates at confluence using above data:
      113.084      107.077
Area of streams before confluence:
       27.940       14.440


Results of confluence:
Total flow rate =    113.084(CFS)
Time of concentration =    10.730 min.
Effective stream area after confluence  =     42.380(Ac.)


++++++++++++++++++++++++++++++++++++++++++++++++++++++++++++++++++++++
Process from Point/Station      112.000 to Point/Station      117.000
**** PIPEFLOW TRAVEL TIME (Program estimated size) ****
______________________________________________________________________
Upstream point/station elevation =   198.000(Ft.)
Downstream point/station elevation =   189.000(Ft.)
Pipe length  =   360.00(Ft.)   Manning's N = 0.013
No. of pipes = 1  Required pipe flow  =   113.084(CFS)
Nearest computed pipe diameter  =     39.00(In.)
Calculated individual pipe flow  =   113.084(CFS)
Normal flow depth in pipe =   28.03(In.)
Flow top width inside pipe =   35.07(In.)
Critical depth could not be calculated.
Pipe flow velocity =     17.72(Ft/s)
Travel time through pipe =    0.34 min.
Time of concentration (TC) =    11.07 min.


++++++++++++++++++++++++++++++++++++++++++++++++++++++++++++++++++++++
Process from Point/Station      112.000 to Point/Station      117.000
**** SUBAREA FLOW ADDITION ****
______________________________________________________________________
Decimal fraction soil group A = 0.000
Decimal fraction soil group B = 0.000
Decimal fraction soil group C = 0.000
Decimal fraction soil group D = 1.000
[HIGH DENSITY RESIDENTIAL                    ]
(24.0 DU/A or Less      )
Impervious value, Ai = 0.650
Sub-Area C Value = 0.710
Time of concentration =    11.07 min.
Rainfall intensity =      4.577(In/Hr) for a   100.0 year storm
Effective runoff coefficient used for total area
(Q=KCIA) is C = 0.673  CA =     36.324
```

```
Subarea runoff =      53.155(CFS) for      11.560(Ac.)
Total runoff =    166.240(CFS)       Total area =       53.940(Ac.)


++++++++++++++++++++++++++++++++++++++++++++++++++++++++++++++++++++++
Process from Point/Station      112.000 to Point/Station      117.000
**** CONFLUENCE OF MAIN STREAMS ****
______________________________________________________________________
The following data inside Main Stream is listed:
In Main Stream number: 1
Stream flow area =      53.940(Ac.)
Runoff from this stream =    166.240(CFS)
Time of concentration =   11.07 min.
Rainfall intensity =     4.577(In/Hr)
Program is now starting with Main Stream No. 2


++++++++++++++++++++++++++++++++++++++++++++++++++++++++++++++++++++++
Process from Point/Station      118.000 to Point/Station      119.000
**** INITIAL AREA EVALUATION ****
______________________________________________________________________
Decimal fraction soil group A = 0.000
Decimal fraction soil group B = 0.000
Decimal fraction soil group C = 0.000
Decimal fraction soil group D = 1.000
[MEDIUM DENSITY RESIDENTIAL                    ]
(7.3 DU/A or Less       )
Impervious value, Ai = 0.400
Sub-Area C Value = 0.570
Initial subarea total flow distance  =   80.000(Ft.)
Highest elevation =  274.600(Ft.)
Lowest elevation =  273.800(Ft.)
Elevation difference =    0.800(Ft.) Slope =  1.000 %
INITIAL AREA TIME OF CONCENTRATION CALCULATIONS:
The maximum overland flow distance is 65.00 (Ft)
for the top area slope value of   1.00 %, in a development type of
 7.3 DU/A or Less
In Accordance With Table 3-2
Initial Area Time of Concentration =   8.40 minutes
 (for slope value of   1.00 %)
Rainfall intensity (I) =      5.468(In/Hr) for a   100.0 year storm
Effective runoff coefficient used for area (Q=KCIA) is C = 0.570
Subarea runoff =      0.592(CFS)
Total initial stream area =        0.190(Ac.)


++++++++++++++++++++++++++++++++++++++++++++++++++++++++++++++++++++++
Process from Point/Station      119.000 to Point/Station      120.000
**** STREET FLOW TRAVEL TIME + SUBAREA FLOW ADDITION ****
______________________________________________________________________
Top of street segment elevation =   273.800(Ft.)
End of street segment elevation =   181.000(Ft.)
Length of street segment  =  1290.000(Ft.)
Height of curb above gutter flowline  =    6.0(In.)
Width of half street (curb to crown)  =  22.000(Ft.)
Distance from crown to crossfall grade break  =  18.000(Ft.)
Slope from gutter to grade break (v/hz) =   0.020
```

```
Slope from grade break to crown (v/hz)  =   0.020
Street flow is on [1] side(s) of the street
Distance from curb to property line  =  10.000(Ft.)
Slope from curb to property line (v/hz) =   0.020
Gutter width =   1.500(Ft.)
Gutter hike from flowline =  1.500(In.)
 Manning's N in gutter =  0.0150
 Manning's N from gutter to grade break =  0.0180
 Manning's N from grade break to crown =  0.0180
Estimated mean flow rate at midpoint of street =     19.754(CFS)
Depth of flow =   0.430(Ft.), Average velocity =   6.849(Ft/s)
Streetflow hydraulics at midpoint of street travel:
Halfstreet flow width =  16.772(Ft.)
Flow velocity =   6.85(Ft/s)
Travel time =    3.14 min.     TC =   11.54  min.
 Adding area flow to street
Decimal fraction soil group A = 0.000
Decimal fraction soil group B = 0.000
Decimal fraction soil group C = 0.000
Decimal fraction soil group D = 1.000
[MEDIUM DENSITY RESIDENTIAL                  ]
(7.3 DU/A or Less       )
Impervious value, Ai = 0.400
Sub-Area C Value = 0.570
Rainfall intensity =      4.455(In/Hr) for a   100.0 year storm
Effective runoff coefficient used for total area
(Q=KCIA) is C = 0.570  CA =      8.715
Subarea runoff =     38.237(CFS) for     15.100(Ac.)
Total runoff =     38.829(CFS)      Total area =      15.290(Ac.)
Street flow at end of street =     38.829(CFS)
Half street flow at end of street =     38.829(CFS)
Depth of flow =   0.535(Ft.), Average velocity =   7.855(Ft/s)
Warning: depth of flow exceeds top of curb
Note:  depth of flow exceeds top of street crown.
Distance that curb overflow reaches into property =    1.75(Ft.)
Flow width (from curb towards crown)=  22.000(Ft.)


++++++++++++++++++++++++++++++++++++++++++++++++++++++++++++++++++++++
Process from Point/Station      120.000 to Point/Station      117.000
**** PIPEFLOW TRAVEL TIME (Program estimated size) ****
______________________________________________________________________
Upstream point/station elevation =   181.000(Ft.)
Downstream point/station elevation =   177.900(Ft.)
Pipe length  =   310.00(Ft.)   Manning's N = 0.013
No. of pipes = 1  Required pipe flow  =    38.829(CFS)
Nearest computed pipe diameter  =     30.00(In.)
Calculated individual pipe flow  =    38.829(CFS)
Normal flow depth in pipe =   23.25(In.)
Flow top width inside pipe =   25.05(In.)
Critical Depth =   25.24(In.)
Pipe flow velocity =      9.51(Ft/s)
Travel time through pipe =    0.54 min.
Time of concentration (TC) =    12.08 min.


++++++++++++++++++++++++++++++++++++++++++++++++++++++++++++++++++++++
```

```
Process from Point/Station      120.000 to Point/Station      117.000
**** CONFLUENCE OF MAIN STREAMS ****
____________________________________________________________________
The following data inside Main Stream is listed:
In Main Stream number: 2
Stream flow area =     15.290(Ac.)
Runoff from this stream =     38.829(CFS)
Time of concentration =   12.08 min.
Rainfall intensity =     4.325(In/Hr)
Summary of stream data:

Stream   Flow rate      TC            Rainfall Intensity
 No.       (CFS)       (min)                 (In/Hr)


1      166.240     11.07                4.577
2       38.829     12.08                4.325
Qmax(1) =
         1.000 *    1.000 *   166.240) +
         1.000 *    0.916 *    38.829) + =     201.809
Qmax(2) =
         0.945 *    1.000 *   166.240) +
         1.000 *    1.000 *    38.829) + =     195.929

Total of 2 main streams to confluence:
Flow rates before confluence point:
     166.240      38.829
Maximum flow rates at confluence using above data:
      201.809      195.929
Area of streams before confluence:
       53.940       15.290


Results of confluence:
Total flow rate =    201.809(CFS)
Time of concentration =    11.068 min.
Effective stream area after confluence  =     69.230(Ac.)


++++++++++++++++++++++++++++++++++++++++++++++++++++++++++++++++++++++
Process from Point/Station      117.000 to Point/Station      121.000
**** PIPEFLOW TRAVEL TIME (Program estimated size) ****
____________________________________________________________________
Upstream point/station elevation =   177.900(Ft.)
Downstream point/station elevation =   148.000(Ft.)
Pipe length  =   345.00(Ft.)   Manning's N = 0.013
No. of pipes = 1  Required pipe flow  =   201.809(CFS)
Nearest computed pipe diameter  =     39.00(In.)
Calculated individual pipe flow  =   201.809(CFS)
Normal flow depth in pipe =   27.14(In.)
Flow top width inside pipe =   35.88(In.)
Critical depth could not be calculated.
Pipe flow velocity =     32.77(Ft/s)
Travel time through pipe =    0.18 min.
Time of concentration (TC) =    11.24 min.
```

```
++++++++++++++++++++++++++++++++++++++++++++++++++++++++++++++++++++++
Process from Point/Station      124.000 to Point/Station      121.000
**** SUBAREA FLOW ADDITION ****
______________________________________________________________________
Decimal fraction soil group A = 0.000
Decimal fraction soil group B = 0.000
Decimal fraction soil group C = 0.000
Decimal fraction soil group D = 1.000
[INDUSTRIAL area type                        ]
(General Industrial       )
Impervious value, Ai = 0.950
Sub-Area C Value = 0.870
Time of concentration =    11.24 min.
Rainfall intensity =      4.530(In/Hr) for a   100.0 year storm
Effective runoff coefficient used for total area
(Q=KCIA) is C = 0.654  CA =     45.944
Subarea runoff =      6.335(CFS) for      1.040(Ac.)
Total runoff =    208.144(CFS)      Total area =      70.270(Ac.)


++++++++++++++++++++++++++++++++++++++++++++++++++++++++++++++++++++++
Process from Point/Station      121.000 to Point/Station      121.000
**** SUBAREA FLOW ADDITION ****
______________________________________________________________________
Decimal fraction soil group A = 0.000
Decimal fraction soil group B = 0.000
Decimal fraction soil group C = 0.000
Decimal fraction soil group D = 1.000
[UNDISTURBED NATURAL TERRAIN                 ]
(Permanent Open Space   )
Impervious value, Ai = 0.000
Sub-Area C Value = 0.350
Time of concentration =    11.24 min.
Rainfall intensity =      4.530(In/Hr) for a   100.0 year storm
Effective runoff coefficient used for total area
(Q=KCIA) is C = 0.649  CA =     46.354
Subarea runoff =      1.855(CFS) for      1.170(Ac.)
Total runoff =    209.999(CFS)      Total area =      71.440(Ac.)


++++++++++++++++++++++++++++++++++++++++++++++++++++++++++++++++++++++
Process from Point/Station      121.000 to Point/Station      122.000
**** PIPEFLOW TRAVEL TIME (Program estimated size) ****
______________________________________________________________________
Upstream point/station elevation =   148.000(Ft.)
Downstream point/station elevation =   125.000(Ft.)
Pipe length  =    77.00(Ft.)   Manning's N = 0.013
No. of pipes = 1  Required pipe flow  =   209.999(CFS)
Nearest computed pipe diameter  =     30.00(In.)
Calculated individual pipe flow  =   209.999(CFS)
Normal flow depth in pipe =   23.06(In.)
Flow top width inside pipe =   25.30(In.)
Critical depth could not be calculated.
Pipe flow velocity =     51.91(Ft/s)
Travel time through pipe =    0.02 min.
Time of concentration (TC) =    11.27 min.
```

```
++++++++++++++++++++++++++++++++++++++++++++++++++++++++++++++++++++++
Process from Point/Station      122.000 to Point/Station      123.000
**** PIPEFLOW TRAVEL TIME (Program estimated size) ****
______________________________________________________________________
Upstream point/station elevation =   125.000(Ft.)
Downstream point/station elevation =    85.000(Ft.)
Pipe length  =   815.00(Ft.)   Manning's N = 0.013
No. of pipes = 1  Required pipe flow  =   209.999(CFS)
Nearest computed pipe diameter  =     42.00(In.)
Calculated individual pipe flow  =   209.999(CFS)
Normal flow depth in pipe =   32.44(In.)
Flow top width inside pipe =   35.22(In.)
Critical depth could not be calculated.
Pipe flow velocity =     26.35(Ft/s)
Travel time through pipe =    0.52 min.
Time of concentration (TC) =    11.78 min.
End of computations, total study area =          71.440 (Ac.)
```

```
            San Diego County Rational Hydrology Program

CIVILCADD/CIVILDESIGN Engineering Software,(c)1991-2004 Version 7.4

Rational method hydrology  program based on
San Diego County Flood Control Division 2003 hydrology manual
      Rational Hydrology Study        Date: 02/23/12
----------------------------------------------------------------------
2468 QUARRY CREEK
PROPOSED CONDITIONS
SYSTEM 200
FILE: S200P100
----------------------------------------------------------------------
 *********   Hydrology Study Control Information **********

----------------------------------------------------------------------


Program License Serial Number 4049

----------------------------------------------------------------------
Rational hydrology study storm event year is   100.0
English (in-lb) input data Units used

Map data precipitation entered:
6 hour,  precipitation(inches) =  2.900
24 hour precipitation(inches) =  5.100
P6/P24 =    56.9%
San Diego hydrology manual 'C' values used


++++++++++++++++++++++++++++++++++++++++++++++++++++++++++++++++++++++
Process from Point/Station      200.000 to Point/Station      201.000
**** INITIAL AREA EVALUATION ****
______________________________________________________________________
Decimal fraction soil group A = 0.000
Decimal fraction soil group B = 0.000
Decimal fraction soil group C = 0.000
Decimal fraction soil group D = 1.000
[INDUSTRIAL area type                        ]
(General Industrial       )
Impervious value, Ai = 0.950
Sub-Area C Value = 0.870
Initial subarea total flow distance  =   62.000(Ft.)
Highest elevation =  181.200(Ft.)
Lowest elevation =  180.500(Ft.)
Elevation difference =    0.700(Ft.) Slope =  1.129 %
INITIAL AREA TIME OF CONCENTRATION CALCULATIONS:
The maximum overland flow distance is 60.00 (Ft)
for the top area slope value of   1.13 %, in a development type of
 General Industrial
In Accordance With Figure 3-3
Initial Area Time of Concentration =   3.08 minutes
TC = [1.8*(1.1-C)*distance(Ft.)^.5)/(% slope^(1/3)]
TC = [1.8*(1.1-0.8700)*(  60.000^.5)/(   1.130^(1/3)]=   3.08
The initial area total distance of   62.00 (Ft.) entered leaves a
```

```
remaining distance of    2.00 (Ft.)
Using Figure 3-4, the travel time for this distance is   0.07 minutes
for a distance of   2.00 (Ft.) and a slope of  1.13 %
with an elevation difference of   0.02(Ft.) from the end of the top area
Tt = [11.9*length(Mi)^3)/(elevation change(Ft.))]^.385 *60(min/hr)
 =    0.075 Minutes
Tt=[(11.9*0.0004^3)/(  0.02)]^.385=  0.07
Total initial area Ti =   3.08 minutes from Figure 3-3 formula plus
  0.07 minutes from the Figure 3-4 formula =   3.15 minutes
Calculated TC of    3.154 minutes is less than 5 minutes,
 resetting TC to 5.0 minutes for rainfall intensity calculations
Rainfall intensity (I) =      7.641(In/Hr) for a   100.0 year storm
Effective runoff coefficient used for area (Q=KCIA) is C = 0.870
Subarea runoff =      0.332(CFS)
Total initial stream area =        0.050(Ac.)


++++++++++++++++++++++++++++++++++++++++++++++++++++++++++++++++++++++
Process from Point/Station      201.000 to Point/Station      202.000
**** STREET FLOW TRAVEL TIME + SUBAREA FLOW ADDITION ****
______________________________________________________________________
Top of street segment elevation =   180.500(Ft.)
End of street segment elevation =   150.000(Ft.)
Length of street segment  =   746.000(Ft.)
Height of curb above gutter flowline  =    6.0(In.)
Width of half street (curb to crown)  =  22.000(Ft.)
Distance from crown to crossfall grade break  =  18.000(Ft.)
Slope from gutter to grade break (v/hz) =   0.020
Slope from grade break to crown (v/hz)  =   0.020
Street flow is on [1] side(s) of the street
Distance from curb to property line  =  10.000(Ft.)
Slope from curb to property line (v/hz) =   0.020
Gutter width =   1.500(Ft.)
Gutter hike from flowline =  1.500(In.)
 Manning's N in gutter =  0.0150
 Manning's N from gutter to grade break =  0.0180
 Manning's N from grade break to crown =  0.0180
Estimated mean flow rate at midpoint of street =      2.115(CFS)
Depth of flow =   0.247(Ft.), Average velocity =   3.276(Ft/s)
Streetflow hydraulics at midpoint of street travel:
Halfstreet flow width =   7.579(Ft.)
Flow velocity =   3.28(Ft/s)
Travel time =    3.80 min.     TC =    6.95  min.
 Adding area flow to street
Decimal fraction soil group A = 0.000
Decimal fraction soil group B = 0.000
Decimal fraction soil group C = 0.000
Decimal fraction soil group D = 1.000
[INDUSTRIAL area type                        ]
(General Industrial       )
Impervious value, Ai = 0.950
Sub-Area C Value = 0.870
Rainfall intensity =      6.179(In/Hr) for a   100.0 year storm
Effective runoff coefficient used for total area
(Q=KCIA) is C = 0.870  CA =      0.644
Subarea runoff =      3.646(CFS) for      0.690(Ac.)
Total runoff =      3.978(CFS)      Total area =       0.740(Ac.)
```

```
Street flow at end of street =      3.978(CFS)
Half street flow at end of street =      3.978(CFS)
Depth of flow =   0.293(Ft.), Average velocity =   3.775(Ft/s)
Flow width (from curb towards crown)=   9.912(Ft.)


++++++++++++++++++++++++++++++++++++++++++++++++++++++++++++++++++++++
Process from Point/Station      203.000 to Point/Station      202.000
**** SUBAREA FLOW ADDITION ****
______________________________________________________________________
Decimal fraction soil group A = 0.000
Decimal fraction soil group B = 0.000
Decimal fraction soil group C = 0.000
Decimal fraction soil group D = 1.000
[UNDISTURBED NATURAL TERRAIN                    ]
(Permanent Open Space   )
Impervious value, Ai = 0.000
Sub-Area C Value = 0.350
Time of concentration =     6.95 min.
Rainfall intensity =      6.179(In/Hr) for a   100.0 year storm
Effective runoff coefficient used for total area
(Q=KCIA) is C = 0.633  CA =      0.861
Subarea runoff =      1.341(CFS) for      0.620(Ac.)
Total runoff =      5.319(CFS)      Total area =      1.360(Ac.)


++++++++++++++++++++++++++++++++++++++++++++++++++++++++++++++++++++++
Process from Point/Station      206.000 to Point/Station      202.000
**** SUBAREA FLOW ADDITION ****
______________________________________________________________________
Decimal fraction soil group A = 0.000
Decimal fraction soil group B = 0.000
Decimal fraction soil group C = 0.000
Decimal fraction soil group D = 1.000
[INDUSTRIAL area type                           ]
(General Industrial       )
Impervious value, Ai = 0.950
Sub-Area C Value = 0.870
Time of concentration =     6.95 min.
Rainfall intensity =      6.179(In/Hr) for a   100.0 year storm
Effective runoff coefficient used for total area
(Q=KCIA) is C = 0.720  CA =      1.548
Subarea runoff =      4.247(CFS) for      0.790(Ac.)
Total runoff =      9.566(CFS)      Total area =      2.150(Ac.)


++++++++++++++++++++++++++++++++++++++++++++++++++++++++++++++++++++++
Process from Point/Station      207.000 to Point/Station      202.000
**** SUBAREA FLOW ADDITION ****
______________________________________________________________________
Decimal fraction soil group A = 0.000
Decimal fraction soil group B = 0.000
Decimal fraction soil group C = 0.000
Decimal fraction soil group D = 1.000
[INDUSTRIAL area type                           ]
(General Industrial       )
Impervious value, Ai = 0.950
```

```
Sub-Area C Value = 0.870
Time of concentration =     6.95 min.
Rainfall intensity =      6.179(In/Hr) for a   100.0 year storm
Effective runoff coefficient used for total area
(Q=KCIA) is C = 0.738  CA =      1.809
Subarea runoff =      1.613(CFS) for      0.300(Ac.)
Total runoff =     11.179(CFS)      Total area =       2.450(Ac.)


++++++++++++++++++++++++++++++++++++++++++++++++++++++++++++++++++++++
Process from Point/Station      205.000 to Point/Station      202.000
**** SUBAREA FLOW ADDITION ****
______________________________________________________________________
Decimal fraction soil group A = 0.000
Decimal fraction soil group B = 0.000
Decimal fraction soil group C = 0.000
Decimal fraction soil group D = 1.000
[UNDISTURBED NATURAL TERRAIN                    ]
(Permanent Open Space   )
Impervious value, Ai = 0.000
Sub-Area C Value = 0.350
Time of concentration =     6.95 min.
Rainfall intensity =      6.179(In/Hr) for a   100.0 year storm
Effective runoff coefficient used for total area
(Q=KCIA) is C = 0.684  CA =      1.949
Subarea runoff =      0.865(CFS) for      0.400(Ac.)
Total runoff =     12.044(CFS)      Total area =       2.850(Ac.)


++++++++++++++++++++++++++++++++++++++++++++++++++++++++++++++++++++++
Process from Point/Station      206.000 to Point/Station      208.000
**** PIPEFLOW TRAVEL TIME (Program estimated size) ****
______________________________________________________________________
Upstream point/station elevation =   142.000(Ft.)
Downstream point/station elevation =   108.000(Ft.)
Pipe length  =   699.00(Ft.)   Manning's N = 0.013
No. of pipes = 1  Required pipe flow  =    12.044(CFS)
Nearest computed pipe diameter  =     15.00(In.)
Calculated individual pipe flow  =    12.044(CFS)
Normal flow depth in pipe =   10.57(In.)
Flow top width inside pipe =   13.69(In.)
Critical depth could not be calculated.
Pipe flow velocity =     13.02(Ft/s)
Travel time through pipe =    0.89 min.
Time of concentration (TC) =     7.84 min.


++++++++++++++++++++++++++++++++++++++++++++++++++++++++++++++++++++++
Process from Point/Station      208.000 to Point/Station      208.000
**** SUBAREA FLOW ADDITION ****
______________________________________________________________________
Decimal fraction soil group A = 0.000
Decimal fraction soil group B = 0.000
Decimal fraction soil group C = 0.000
Decimal fraction soil group D = 1.000
[INDUSTRIAL area type                           ]
(General Industrial       )
```

```
Impervious value, Ai = 0.950
Sub-Area C Value = 0.870
Time of concentration =     7.84 min.
Rainfall intensity =      5.715(In/Hr) for a   100.0 year storm
Effective runoff coefficient used for total area
(Q=KCIA) is C = 0.730  CA =      2.776
Subarea runoff =      3.818(CFS) for      0.950(Ac.)
Total runoff =     15.862(CFS)      Total area =       3.800(Ac.)


++++++++++++++++++++++++++++++++++++++++++++++++++++++++++++++++++++++
Process from Point/Station      208.000 to Point/Station      290.000
**** PIPEFLOW TRAVEL TIME (Program estimated size) ****
______________________________________________________________________
Upstream point/station elevation =   108.000(Ft.)
Downstream point/station elevation =   107.000(Ft.)
Pipe length  =    41.00(Ft.)   Manning's N = 0.013
No. of pipes = 1  Required pipe flow  =    15.862(CFS)
Nearest computed pipe diameter  =     18.00(In.)
Calculated individual pipe flow  =    15.862(CFS)
Normal flow depth in pipe =   14.25(In.)
Flow top width inside pipe =   14.62(In.)
Critical Depth =   17.06(In.)
Pipe flow velocity =     10.58(Ft/s)
Travel time through pipe =    0.06 min.
Time of concentration (TC) =     7.91 min.


++++++++++++++++++++++++++++++++++++++++++++++++++++++++++++++++++++++
Process from Point/Station      208.000 to Point/Station      290.000
**** CONFLUENCE OF MAIN STREAMS ****
______________________________________________________________________
The following data inside Main Stream is listed:
In Main Stream number: 1
Stream flow area =      3.800(Ac.)
Runoff from this stream =     15.862(CFS)
Time of concentration =    7.91 min.
Rainfall intensity =     5.685(In/Hr)
Program is now starting with Main Stream No. 2


++++++++++++++++++++++++++++++++++++++++++++++++++++++++++++++++++++++
Process from Point/Station      210.000 to Point/Station      212.000
**** INITIAL AREA EVALUATION ****
______________________________________________________________________
Decimal fraction soil group A = 0.000
Decimal fraction soil group B = 0.000
Decimal fraction soil group C = 0.000
Decimal fraction soil group D = 1.000
[UNDISTURBED NATURAL TERRAIN                    ]
(Permanent Open Space   )
Impervious value, Ai = 0.000
Sub-Area C Value = 0.350
Initial subarea total flow distance  =   70.000(Ft.)
Highest elevation =  178.000(Ft.)
Lowest elevation =  118.300(Ft.)
Elevation difference =   59.700(Ft.) Slope = 85.286 %
```

```
Top of Initial Area Slope adjusted by User to 30.000 %
INITIAL AREA TIME OF CONCENTRATION CALCULATIONS:
The maximum overland flow distance is 100.00 (Ft)
for the top area slope value of  30.00 %, in a development type of
 Permanent Open Space
In Accordance With Figure 3-3
Initial Area Time of Concentration =   4.34 minutes
TC = [1.8*(1.1-C)*distance(Ft.)^.5)/(% slope^(1/3)]
TC = [1.8*(1.1-0.3500)*( 100.000^.5)/(  30.000^(1/3)]=   4.34
Calculated TC of    4.345 minutes is less than 5 minutes,
 resetting TC to 5.0 minutes for rainfall intensity calculations
Rainfall intensity (I) =      7.641(In/Hr) for a   100.0 year storm
Effective runoff coefficient used for area (Q=KCIA) is C = 0.350
Subarea runoff =      0.241(CFS)
Total initial stream area =        0.090(Ac.)


++++++++++++++++++++++++++++++++++++++++++++++++++++++++++++++++++++++
Process from Point/Station      212.000 to Point/Station      230.000
**** IMPROVED CHANNEL TRAVEL TIME ****
______________________________________________________________________
Upstream point elevation =   118.300(Ft.)
Downstream point elevation =   115.000(Ft.)
Channel length thru subarea  =   367.000(Ft.)
Channel base width      =    5.000(Ft.)
Slope or 'Z' of left channel bank =  50.000
Slope or 'Z' of right channel bank =  50.000
Estimated mean flow rate at midpoint of channel =      1.421(CFS)
Manning's 'N'    = 0.018
Maximum depth of channel  =    1.000(Ft.)
Flow(q) thru subarea =      1.421(CFS)
Depth of flow =   0.105(Ft.), Average velocity =   1.322(Ft/s)
Channel flow top width =   15.492(Ft.)
Flow Velocity =    1.32(Ft/s)
Travel time  =    4.63 min.
Time of concentration =    8.97 min.
Critical depth =      0.099(Ft.)
 Adding area flow to channel
Decimal fraction soil group A = 0.000
Decimal fraction soil group B = 0.000
Decimal fraction soil group C = 0.000
Decimal fraction soil group D = 1.000
[LOW DENSITY RESIDENTIAL                    ]
(1.0 DU/A or Less       )
Impervious value, Ai = 0.100
Sub-Area C Value = 0.410
Rainfall intensity =      5.240(In/Hr) for a   100.0 year storm
Effective runoff coefficient used for total area
(Q=KCIA) is C = 0.405  CA =      0.478
Subarea runoff =      2.266(CFS) for      1.090(Ac.)
Total runoff =      2.507(CFS)      Total area =       1.180(Ac.)
Depth of flow =   0.137(Ft.), Average velocity =   1.537(Ft/s)
Critical depth =      0.132(Ft.)


++++++++++++++++++++++++++++++++++++++++++++++++++++++++++++++++++++++
Process from Point/Station      220.000 to Point/Station      230.000
```

```
**** SUBAREA FLOW ADDITION ****
_____________________________________________________________________
Decimal fraction soil group A = 0.000
Decimal fraction soil group B = 0.000
Decimal fraction soil group C = 0.000
Decimal fraction soil group D = 1.000
[UNDISTURBED NATURAL TERRAIN                    ]
(Permanent Open Space   )
Impervious value, Ai = 0.000
Sub-Area C Value = 0.350
Time of concentration =     8.97 min.
Rainfall intensity =      5.240(In/Hr) for a   100.0 year storm
Effective runoff coefficient used for total area
(Q=KCIA) is C = 0.376  CA =      0.961
Subarea runoff =      2.531(CFS) for      1.380(Ac.)
Total runoff =      5.038(CFS)      Total area =       2.560(Ac.)


++++++++++++++++++++++++++++++++++++++++++++++++++++++++++++++++++++++
Process from Point/Station      230.000 to Point/Station      240.000
**** IMPROVED CHANNEL TRAVEL TIME ****
_____________________________________________________________________
Upstream point elevation =   115.000(Ft.)
Downstream point elevation =   114.000(Ft.)
Channel length thru subarea  =   100.000(Ft.)
Channel base width      =    5.000(Ft.)
Slope or 'Z' of left channel bank =  50.000
Slope or 'Z' of right channel bank =  50.000
Manning's 'N'    = 0.018
Maximum depth of channel  =    1.000(Ft.)
Flow(q) thru subarea =      5.038(CFS)
Depth of flow =   0.185(Ft.), Average velocity =   1.918(Ft/s)
Channel flow top width =   23.461(Ft.)
Flow Velocity =    1.92(Ft/s)
Travel time  =    0.87 min.
Time of concentration =    9.84 min.
Critical depth =      0.186(Ft.)


++++++++++++++++++++++++++++++++++++++++++++++++++++++++++++++++++++++
Process from Point/Station      230.000 to Point/Station      240.000
**** CONFLUENCE OF MINOR STREAMS ****
_____________________________________________________________________
Along Main Stream number: 2 in normal stream number 1
Stream flow area =      2.560(Ac.)
Runoff from this stream =      5.038(CFS)
Time of concentration =    9.84 min.
Rainfall intensity =     4.937(In/Hr)


++++++++++++++++++++++++++++++++++++++++++++++++++++++++++++++++++++++
Process from Point/Station      216.000 to Point/Station      218.000
**** INITIAL AREA EVALUATION ****
_____________________________________________________________________
Decimal fraction soil group A = 0.000
Decimal fraction soil group B = 0.000
Decimal fraction soil group C = 0.000
```

```
Decimal fraction soil group D = 1.000
[UNDISTURBED NATURAL TERRAIN                    ]
(Permanent Open Space   )
Impervious value, Ai = 0.000
Sub-Area C Value = 0.350
Initial subarea total flow distance  =  106.000(Ft.)
Highest elevation =  166.000(Ft.)
Lowest elevation =  133.000(Ft.)
Elevation difference =   33.000(Ft.) Slope = 31.132 %
Top of Initial Area Slope adjusted by User to 30.000 %
Bottom of Initial Area Slope adjusted by User to 30.000 %
INITIAL AREA TIME OF CONCENTRATION CALCULATIONS:
The maximum overland flow distance is 100.00 (Ft)
for the top area slope value of  30.00 %, in a development type of
 Permanent Open Space
In Accordance With Figure 3-3
Initial Area Time of Concentration =   4.34 minutes
TC = [1.8*(1.1-C)*distance(Ft.)^.5)/(% slope^(1/3)]
TC = [1.8*(1.1-0.3500)*( 100.000^.5)/(  30.000^(1/3)]=   4.34
The initial area total distance of  106.00 (Ft.) entered leaves a
remaining distance of    6.00 (Ft.)
Using Figure 3-4, the travel time for this distance is   0.05 minutes
for a distance of   6.00 (Ft.) and a slope of 30.00 %
with an elevation difference of   1.80(Ft.) from the end of the top area
Tt = [11.9*length(Mi)^3)/(elevation change(Ft.))]^.385 *60(min/hr)
 =    0.049 Minutes
Tt=[(11.9*0.0011^3)/(  1.80)]^.385=  0.05
Total initial area Ti =   4.34 minutes from Figure 3-3 formula plus
  0.05 minutes from the Figure 3-4 formula =   4.39 minutes
Calculated TC of    4.394 minutes is less than 5 minutes,
 resetting TC to 5.0 minutes for rainfall intensity calculations
Rainfall intensity (I) =      7.641(In/Hr) for a   100.0 year storm
Effective runoff coefficient used for area (Q=KCIA) is C = 0.350
Subarea runoff =      0.241(CFS)
Total initial stream area =        0.090(Ac.)


++++++++++++++++++++++++++++++++++++++++++++++++++++++++++++++++++++++
Process from Point/Station      218.000 to Point/Station      240.000
**** IMPROVED CHANNEL TRAVEL TIME ****
______________________________________________________________________
Upstream point elevation =   133.000(Ft.)
Downstream point elevation =   114.000(Ft.)
Channel length thru subarea  =   309.000(Ft.)
Channel base width      =    0.500(Ft.)
Slope or 'Z' of left channel bank =   0.750
Slope or 'Z' of right channel bank =   0.750
Estimated mean flow rate at midpoint of channel =      0.869(CFS)
Manning's 'N'    = 0.015
Maximum depth of channel  =    1.000(Ft.)
Flow(q) thru subarea =      0.869(CFS)
Depth of flow =   0.207(Ft.), Average velocity =   6.410(Ft/s)
Channel flow top width =    0.810(Ft.)
Flow Velocity =    6.41(Ft/s)
Travel time  =    0.80 min.
Time of concentration =    5.20 min.
Critical depth =      0.375(Ft.)
```

```
 Adding area flow to channel
Decimal fraction soil group A = 0.000
Decimal fraction soil group B = 0.000
Decimal fraction soil group C = 0.000
Decimal fraction soil group D = 1.000
[UNDISTURBED NATURAL TERRAIN                    ]
(Permanent Open Space   )
Impervious value, Ai = 0.000
Sub-Area C Value = 0.350
Rainfall intensity =      7.452(In/Hr) for a   100.0 year storm
Effective runoff coefficient used for total area
(Q=KCIA) is C = 0.350  CA =      0.196
Subarea runoff =      1.220(CFS) for      0.470(Ac.)
Total runoff =      1.461(CFS)      Total area =       0.560(Ac.)
Depth of flow =  0.279(Ft.), Average velocity =   7.393(Ft/s)
Critical depth =      0.500(Ft.)


++++++++++++++++++++++++++++++++++++++++++++++++++++++++++++++++++++++
Process from Point/Station      239.000 to Point/Station      240.000
**** SUBAREA FLOW ADDITION ****
______________________________________________________________________
Decimal fraction soil group A = 0.000
Decimal fraction soil group B = 0.000
Decimal fraction soil group C = 0.000
Decimal fraction soil group D = 1.000
[UNDISTURBED NATURAL TERRAIN                    ]
(Permanent Open Space   )
Impervious value, Ai = 0.000
Sub-Area C Value = 0.350
Time of concentration =     5.20 min.
Rainfall intensity =      7.452(In/Hr) for a   100.0 year storm
Effective runoff coefficient used for total area
(Q=KCIA) is C = 0.350  CA =      0.231
Subarea runoff =      0.261(CFS) for      0.100(Ac.)
Total runoff =      1.721(CFS)      Total area =       0.660(Ac.)


++++++++++++++++++++++++++++++++++++++++++++++++++++++++++++++++++++++
Process from Point/Station      239.000 to Point/Station      240.000
**** CONFLUENCE OF MINOR STREAMS ****
______________________________________________________________________
Along Main Stream number: 2 in normal stream number 2
Stream flow area =      0.660(Ac.)
Runoff from this stream =      1.721(CFS)
Time of concentration =    5.20 min.
Rainfall intensity =     7.452(In/Hr)
Summary of stream data:

Stream   Flow rate      TC            Rainfall Intensity
 No.       (CFS)       (min)                 (In/Hr)


1        5.038      9.84                4.937
2        1.721      5.20                7.452
Qmax(1) =
         1.000 *    1.000 *     5.038) +
```

```
        0.662 *    1.000 *     1.721) + =       6.178
Qmax(2) =
        1.000 *    0.528 *     5.038) +
        1.000 *    1.000 *     1.721) + =       4.382

Total of 2 streams to confluence:
Flow rates before confluence point:
      5.038       1.721
Maximum flow rates at confluence using above data:
       6.178       4.382
Area of streams before confluence:
       2.560       0.660
Results of confluence:
Total flow rate =      6.178(CFS)
Time of concentration =     9.841 min.
Effective stream area after confluence =      3.220(Ac.)


++++++++++++++++++++++++++++++++++++++++++++++++++++++++++++++++++++++
Process from Point/Station      240.000 to Point/Station      290.000
**** IMPROVED CHANNEL TRAVEL TIME ****
______________________________________________________________________
Upstream point elevation =   108.000(Ft.)
Downstream point elevation =   107.000(Ft.)
Channel length thru subarea  =   150.000(Ft.)
Channel base width      =    5.000(Ft.)
Slope or 'Z' of left channel bank =  50.000
Slope or 'Z' of right channel bank =  50.000
Estimated mean flow rate at midpoint of channel =     16.823(CFS)
Manning's 'N'    = 0.018
Maximum depth of channel  =    1.000(Ft.)
Flow(q) thru subarea =     16.823(CFS)
Depth of flow =   0.340(Ft.), Average velocity =   2.243(Ft/s)
Channel flow top width =   39.048(Ft.)
Flow Velocity =    2.24(Ft/s)
Travel time  =    1.11 min.
Time of concentration =   10.96 min.
Critical depth =      0.324(Ft.)
 Adding area flow to channel
Decimal fraction soil group A = 0.000
Decimal fraction soil group B = 0.000
Decimal fraction soil group C = 0.000
Decimal fraction soil group D = 1.000
[COMMERCIAL area type                        ]
(General Commercial    )
Impervious value, Ai = 0.850
Sub-Area C Value = 0.820
Rainfall intensity =      4.607(In/Hr) for a   100.0 year storm
Effective runoff coefficient used for total area
(Q=KCIA) is C = 0.660  CA =      5.981
Subarea runoff =     21.376(CFS) for      5.840(Ac.)
Total runoff =     27.554(CFS)      Total area =       9.060(Ac.)
Depth of flow =   0.418(Ft.), Average velocity =   2.541(Ft/s)
Critical depth =      0.406(Ft.)


++++++++++++++++++++++++++++++++++++++++++++++++++++++++++++++++++++++
```

```
Process from Point/Station      260.000 to Point/Station      290.000
**** SUBAREA FLOW ADDITION ****
____________________________________________________________________
Decimal fraction soil group A = 0.000
Decimal fraction soil group B = 0.000
Decimal fraction soil group C = 0.000
Decimal fraction soil group D = 1.000
[UNDISTURBED NATURAL TERRAIN                    ]
(Permanent Open Space   )
Impervious value, Ai = 0.000
Sub-Area C Value = 0.350
Time of concentration =    10.96 min.
Rainfall intensity =      4.607(In/Hr) for a   100.0 year storm
Effective runoff coefficient used for total area
(Q=KCIA) is C = 0.617  CA =      6.499
Subarea runoff =      2.386(CFS) for      1.480(Ac.)
Total runoff =     29.941(CFS)      Total area =      10.540(Ac.)


++++++++++++++++++++++++++++++++++++++++++++++++++++++++++++++++++++++
Process from Point/Station      260.000 to Point/Station      290.000
**** CONFLUENCE OF MAIN STREAMS ****
____________________________________________________________________
The following data inside Main Stream is listed:
In Main Stream number: 2
Stream flow area =     10.540(Ac.)
Runoff from this stream =     29.941(CFS)
Time of concentration =   10.96 min.
Rainfall intensity =     4.607(In/Hr)
Summary of stream data:

Stream   Flow rate      TC            Rainfall Intensity
 No.       (CFS)       (min)                 (In/Hr)


1       15.862      7.91                5.685
2       29.941     10.96                4.607
Qmax(1) =
         1.000 *    1.000 *    15.862) +
         1.000 *    0.722 *    29.941) + =      37.475
Qmax(2) =
         0.810 *    1.000 *    15.862) +
         1.000 *    1.000 *    29.941) + =      42.795

Total of 2 main streams to confluence:
Flow rates before confluence point:
      15.862      29.941
Maximum flow rates at confluence using above data:
       37.475       42.795
Area of streams before confluence:
        3.800       10.540


Results of confluence:
Total flow rate =     42.795(CFS)
Time of concentration =    10.956 min.
Effective stream area after confluence  =     14.340(Ac.)
```

```
++++++++++++++++++++++++++++++++++++++++++++++++++++++++++++++++++++++
Process from Point/Station      290.000 to Point/Station      204.000
**** PIPEFLOW TRAVEL TIME (Program estimated size) ****
______________________________________________________________________
Upstream point/station elevation =    99.600(Ft.)
Downstream point/station elevation =    86.200(Ft.)
Pipe length  =   298.00(Ft.)   Manning's N = 0.013
No. of pipes = 1  Required pipe flow  =    42.795(CFS)
Nearest computed pipe diameter  =     24.00(In.)
Calculated individual pipe flow  =    42.795(CFS)
Normal flow depth in pipe =   17.67(In.)
Flow top width inside pipe =   21.15(In.)
Critical depth could not be calculated.
Pipe flow velocity =     17.26(Ft/s)
Travel time through pipe =    0.29 min.
Time of concentration (TC) =    11.24 min.
End of computations, total study area =          14.340 (Ac.)
```

San Diego County Rational Hydrology Program

CIVILCADD/CIVILDESIGN Engineering Software,(c)1991-2004 Version 7.4

Rational method hydrology program based on
San Diego County Flood Control Division 2003 hydrology manual
Rational Hydrology Study Date: 10/02/12

---

2468 QUARRY CREEK
SYSTEM 300
PROPOSED CONDITIONS
FILE: S300P100

---

********* Hydrology Study Control Information **********

---

Program License Serial Number 4049

---

Rational hydrology study storm event year is 100.0
English (in-lb) input data Units used

Map data precipitation entered:
6 hour, precipitation(inches) = 2.900
24 hour precipitation(inches) = 5.100
P6/P24 = 56.9%
San Diego hydrology manual 'C' values used

++++++++++++++++++++++++++++++++++++++++++++++++++++++++++++++++++++++
Process from Point/Station 300.000 to Point/Station 301.000
**** INITIAL AREA EVALUATION ****

---

Decimal fraction soil group A = 0.000
Decimal fraction soil group B = 0.000
Decimal fraction soil group C = 0.000
Decimal fraction soil group D = 1.000
[COMMERCIAL area type ]
(General Commercial )
Impervious value, Ai = 0.850
Sub-Area C Value = 0.820
Initial subarea total flow distance = 76.000(Ft.)
Highest elevation = 115.700(Ft.)
Lowest elevation = 115.000(Ft.)
Elevation difference = 0.700(Ft.) Slope = 0.921 %
INITIAL AREA TIME OF CONCENTRATION CALCULATIONS:
The maximum overland flow distance is 60.00 (Ft)
for the top area slope value of 0.92 %, in a development type of
General Commercial
In Accordance With Figure 3-3
Initial Area Time of Concentration = 4.01 minutes
TC = [1.8*(1.1-C)*distance(Ft.)^.5)/(% slope^(1/3)]
TC = [1.8*(1.1-0.8200)*( 60.000^.5)/( 0.921^(1/3)]= 4.01
The initial area total distance of 76.00 (Ft.) entered leaves a
remaining distance of 16.00 (Ft.)
Using Figure 3-4, the travel time for this distance is 0.40 minutes
for a distance of 16.00 (Ft.) and a slope of 0.92 %

```
with an elevation difference of   0.15(Ft.) from the end of the top area
Tt = [11.9*length(Mi)^3)/(elevation change(Ft.))]^.385 *60(min/hr)
 =    0.401 Minutes
Tt=[(11.9*0.0030^3)/(  0.15)]^.385=  0.40
Total initial area Ti =   4.01 minutes from Figure 3-3 formula plus
  0.40 minutes from the Figure 3-4 formula =   4.41 minutes
Calculated TC of    4.414 minutes is less than 5 minutes,
 resetting TC to 5.0 minutes for rainfall intensity calculations
Rainfall intensity (I) =      7.641(In/Hr) for a   100.0 year storm
Effective runoff coefficient used for area (Q=KCIA) is C = 0.820
Subarea runoff =      1.692(CFS)
Total initial stream area =        0.270(Ac.)


++++++++++++++++++++++++++++++++++++++++++++++++++++++++++++++++++++++
Process from Point/Station      301.000 to Point/Station      303.000
**** IMPROVED CHANNEL TRAVEL TIME ****
______________________________________________________________________
Upstream point elevation =   115.000(Ft.)
Downstream point elevation =   108.500(Ft.)
Channel length thru subarea  =   698.000(Ft.)
Channel base width =   10.000(Ft.)
Slope or 'Z' of left channel bank =   5.000
Slope or 'Z' of right channel bank =   5.000
Estimated mean flow rate at midpoint of channel =     21.774(CFS)
Manning's 'N'    = 0.018
Maximum depth of channel  =    1.000(Ft.)
Flow(q) thru subarea =     21.774(CFS)
Depth of flow =   0.437(Ft.), Average velocity =   4.092(Ft/s)
Channel flow top width =   14.367(Ft.)
Flow Velocity =    4.09(Ft/s)
Travel time  =    2.84 min.
Time of concentration =    7.26 min.
Critical depth =      0.484(Ft.)
 Adding area flow to channel
Decimal fraction soil group A = 0.000
Decimal fraction soil group B = 0.000
Decimal fraction soil group C = 0.000
Decimal fraction soil group D = 1.000
[COMMERCIAL area type                        ]
(General Commercial    )
Impervious value, Ai = 0.850
Sub-Area C Value = 0.820
Rainfall intensity =      6.009(In/Hr) for a   100.0 year storm
Effective runoff coefficient used for total area
(Q=KCIA) is C = 0.820  CA =      6.954
Subarea runoff =     40.092(CFS) for      8.210(Ac.)
Total runoff =     41.783(CFS)  Total area =       8.480(Ac.)
Depth of flow =   0.630(Ft.), Average velocity =   5.047(Ft/s)
Critical depth =      0.719(Ft.)


++++++++++++++++++++++++++++++++++++++++++++++++++++++++++++++++++++++
Process from Point/Station      302.000 to Point/Station      303.000
**** SUBAREA FLOW ADDITION ****
______________________________________________________________________
Decimal fraction soil group A = 0.000
Decimal fraction soil group B = 0.000
Decimal fraction soil group C = 0.000
Decimal fraction soil group D = 1.000
```

```
[UNDISTURBED NATURAL TERRAIN                    ]
(Permanent Open Space   )
Impervious value, Ai = 0.000
Sub-Area C Value = 0.350
Time of concentration =     7.26 min.
Rainfall intensity =      6.009(In/Hr) for a   100.0 year storm
Effective runoff coefficient used for total area
(Q=KCIA) is C = 0.758  CA =      7.405
Subarea runoff =      2.713(CFS) for      1.290(Ac.)
Total runoff =     44.496(CFS)  Total area =       9.770(Ac.)


++++++++++++++++++++++++++++++++++++++++++++++++++++++++++++++++++++++
Process from Point/Station      301.000 to Point/Station      303.000
**** CONFLUENCE OF MINOR STREAMS ****
______________________________________________________________________
Along Main Stream number: 1 in normal stream number 1
Stream flow area =      9.770(Ac.)
Runoff from this stream =     44.496(CFS)
Time of concentration =    7.26 min.
Rainfall intensity =     6.009(In/Hr)


++++++++++++++++++++++++++++++++++++++++++++++++++++++++++++++++++++++
Process from Point/Station      308.000 to Point/Station      310.000
**** INITIAL AREA EVALUATION ****
______________________________________________________________________
Decimal fraction soil group A = 0.000
Decimal fraction soil group B = 0.000
Decimal fraction soil group C = 0.000
Decimal fraction soil group D = 1.000
[INDUSTRIAL area type                           ]
(General Industrial       )
Impervious value, Ai = 0.950
Sub-Area C Value = 0.870
Initial subarea total flow distance  =  361.000(Ft.)
Highest elevation =  153.200(Ft.)
Lowest elevation =  134.000(Ft.)
Elevation difference =   19.200(Ft.) Slope =  5.319 %
INITIAL AREA TIME OF CONCENTRATION CALCULATIONS:
The maximum overland flow distance is 90.00 (Ft)
for the top area slope value of   5.32 %, in a development type of
 General Industrial
In Accordance With Figure 3-3
Initial Area Time of Concentration =   2.25 minutes
TC = [1.8*(1.1-C)*distance(Ft.)^.5)/(% slope^(1/3)]
TC = [1.8*(1.1-0.8700)*(  90.000^.5)/(   5.320^(1/3)]=   2.25
The initial area total distance of  361.00 (Ft.) entered leaves a
remaining distance of  271.00 (Ft.)
Using Figure 3-4, the travel time for this distance is   1.81 minutes
for a distance of 271.00 (Ft.) and a slope of  5.32 %
with an elevation difference of  14.42(Ft.) from the end of the top area
Tt = [11.9*length(Mi)^3)/(elevation change(Ft.))]^.385 *60(min/hr)
 =    1.805 Minutes
Tt=[(11.9*0.0513^3)/( 14.42)]^.385=  1.81
Total initial area Ti =   2.25 minutes from Figure 3-3 formula plus
  1.81 minutes from the Figure 3-4 formula =   4.05 minutes
Calculated TC of    4.055 minutes is less than 5 minutes,
 resetting TC to 5.0 minutes for rainfall intensity calculations
Rainfall intensity (I) =      7.641(In/Hr) for a   100.0 year storm
```

```
Effective runoff coefficient used for area (Q=KCIA) is C = 0.870
Subarea runoff =      4.055(CFS)
Total initial stream area =        0.610(Ac.)


++++++++++++++++++++++++++++++++++++++++++++++++++++++++++++++++++++++
Process from Point/Station      310.000 to Point/Station      312.000
**** PIPEFLOW TRAVEL TIME (Program estimated size) ****
______________________________________________________________________
Upstream point/station elevation =   128.500(Ft.)
Downstream point/station elevation =   128.200(Ft.)
Pipe length  =     3.00(Ft.)   Manning's N = 0.013
No. of pipes = 1  Required pipe flow  =     4.055(CFS)
Nearest computed pipe diameter  =      9.00(In.)
Calculated individual pipe flow  =     4.055(CFS)
Normal flow depth in pipe =    5.95(In.)
Flow top width inside pipe =    8.52(In.)
Critical depth could not be calculated.
Pipe flow velocity =     13.08(Ft/s)
Travel time through pipe =    0.00 min.
Time of concentration (TC) =     4.06 min.


++++++++++++++++++++++++++++++++++++++++++++++++++++++++++++++++++++++
Process from Point/Station      311.000 to Point/Station      312.000
**** SUBAREA FLOW ADDITION ****
______________________________________________________________________
Decimal fraction soil group A = 0.000
Decimal fraction soil group B = 0.000
Decimal fraction soil group C = 0.000
Decimal fraction soil group D = 1.000
[INDUSTRIAL area type                        ]
(General Industrial       )
Impervious value, Ai = 0.950
Sub-Area C Value = 0.870
Time of concentration =     4.06 min.
Rainfall intensity =      7.641(In/Hr) for a   100.0 year storm
Effective runoff coefficient used for total area
(Q=KCIA) is C = 0.870  CA =      0.748
Subarea runoff =      1.662(CFS) for      0.250(Ac.)
Total runoff =      5.717(CFS)  Total area =       0.860(Ac.)


++++++++++++++++++++++++++++++++++++++++++++++++++++++++++++++++++++++
Process from Point/Station      312.000 to Point/Station      313.000
**** PIPEFLOW TRAVEL TIME (Program estimated size) ****
______________________________________________________________________
Upstream point/station elevation =   128.200(Ft.)
Downstream point/station elevation =   110.000(Ft.)
Pipe length  =   313.00(Ft.)   Manning's N = 0.013
No. of pipes = 1  Required pipe flow  =     5.717(CFS)
Nearest computed pipe diameter  =     12.00(In.)
Calculated individual pipe flow  =     5.717(CFS)
Normal flow depth in pipe =    7.15(In.)
Flow top width inside pipe =   11.78(In.)
Critical Depth =   11.36(In.)
Pipe flow velocity =     11.71(Ft/s)
Travel time through pipe =    0.45 min.
Time of concentration (TC) =     4.50 min.
```

```
++++++++++++++++++++++++++++++++++++++++++++++++++++++++++++++++++++++
Process from Point/Station      305.000 to Point/Station      313.000
**** SUBAREA FLOW ADDITION ****
______________________________________________________________________
Decimal fraction soil group A = 0.000
Decimal fraction soil group B = 0.000
Decimal fraction soil group C = 0.000
Decimal fraction soil group D = 1.000
[LOW DENSITY RESIDENTIAL                    ]
(1.0 DU/A or Less       )
Impervious value, Ai = 0.100
Sub-Area C Value = 0.410
Time of concentration =     4.50 min.
Rainfall intensity =      7.641(In/Hr) for a   100.0 year storm
Effective runoff coefficient used for total area
(Q=KCIA) is C = 0.659  CA =      1.047
Subarea runoff =      2.287(CFS) for      0.730(Ac.)
Total runoff =      8.004(CFS)  Total area =       1.590(Ac.)


++++++++++++++++++++++++++++++++++++++++++++++++++++++++++++++++++++++
Process from Point/Station      313.000 to Point/Station      314.000
**** PIPEFLOW TRAVEL TIME (Program estimated size) ****
______________________________________________________________________
Upstream point/station elevation =   110.000(Ft.)
Downstream point/station elevation =    98.000(Ft.)
Pipe length  =   436.00(Ft.)   Manning's N = 0.013
No. of pipes = 1  Required pipe flow  =     8.004(CFS)
Nearest computed pipe diameter  =     15.00(In.)
Calculated individual pipe flow  =     8.004(CFS)
Normal flow depth in pipe =    9.67(In.)
Flow top width inside pipe =   14.36(In.)
Critical Depth =   13.37(In.)
Pipe flow velocity =      9.58(Ft/s)
Travel time through pipe =    0.76 min.
Time of concentration (TC) =     5.26 min.


++++++++++++++++++++++++++++++++++++++++++++++++++++++++++++++++++++++
Process from Point/Station      306.000 to Point/Station      314.000
**** SUBAREA FLOW ADDITION ****
______________________________________________________________________
Decimal fraction soil group A = 0.000
Decimal fraction soil group B = 0.000
Decimal fraction soil group C = 0.000
Decimal fraction soil group D = 1.000
[INDUSTRIAL area type                       ]
(General Industrial       )
Impervious value, Ai = 0.950
Sub-Area C Value = 0.870
Time of concentration =     5.26 min.
Rainfall intensity =      7.392(In/Hr) for a   100.0 year storm
Effective runoff coefficient used for total area
(Q=KCIA) is C = 0.727  CA =      1.709
Subarea runoff =      4.627(CFS) for      0.760(Ac.)
Total runoff =     12.631(CFS)  Total area =       2.350(Ac.)


++++++++++++++++++++++++++++++++++++++++++++++++++++++++++++++++++++++
```

```
Process from Point/Station      314.000 to Point/Station      315.000
**** PIPEFLOW TRAVEL TIME (Program estimated size) ****
____________________________________________________________________
Upstream point/station elevation =    98.000(Ft.)
Downstream point/station elevation =    97.500(Ft.)
Pipe length  =    33.00(Ft.)   Manning's N = 0.013
No. of pipes = 1  Required pipe flow  =    12.631(CFS)
Nearest computed pipe diameter  =     18.00(In.)
Calculated individual pipe flow  =    12.631(CFS)
Normal flow depth in pipe =   14.39(In.)
Flow top width inside pipe =   14.41(In.)
Critical Depth =   16.06(In.)
Pipe flow velocity =      8.34(Ft/s)
Travel time through pipe =    0.07 min.
Time of concentration (TC) =     5.33 min.


++++++++++++++++++++++++++++++++++++++++++++++++++++++++++++++++++++++
Process from Point/Station      309.000 to Point/Station      315.000
**** SUBAREA FLOW ADDITION ****
____________________________________________________________________
Decimal fraction soil group A = 0.000
Decimal fraction soil group B = 0.000
Decimal fraction soil group C = 0.000
Decimal fraction soil group D = 1.000
[INDUSTRIAL area type                        ]
(General Industrial       )
Impervious value, Ai = 0.950
Sub-Area C Value = 0.870
Time of concentration =     5.33 min.
Rainfall intensity =      7.333(In/Hr) for a   100.0 year storm
Effective runoff coefficient used for total area
(Q=KCIA) is C = 0.763  CA =      2.396
Subarea runoff =      4.939(CFS) for      0.790(Ac.)
Total runoff =     17.570(CFS)  Total area =       3.140(Ac.)


++++++++++++++++++++++++++++++++++++++++++++++++++++++++++++++++++++++
Process from Point/Station      315.000 to Point/Station      303.000
**** PIPEFLOW TRAVEL TIME (Program estimated size) ****
____________________________________________________________________
Upstream point/station elevation =    97.500(Ft.)
Downstream point/station elevation =    97.000(Ft.)
Pipe length  =    21.00(Ft.)   Manning's N = 0.013
No. of pipes = 1  Required pipe flow  =    17.570(CFS)
Nearest computed pipe diameter  =     21.00(In.)
Calculated individual pipe flow  =    17.570(CFS)
Normal flow depth in pipe =   13.17(In.)
Flow top width inside pipe =   20.31(In.)
Critical Depth =   18.36(In.)
Pipe flow velocity =     11.06(Ft/s)
Travel time through pipe =    0.03 min.
Time of concentration (TC) =     5.36 min.


++++++++++++++++++++++++++++++++++++++++++++++++++++++++++++++++++++++
Process from Point/Station      315.000 to Point/Station      303.000
**** CONFLUENCE OF MINOR STREAMS ****
____________________________________________________________________
Along Main Stream number: 1 in normal stream number 2
```

```
Stream flow area =       3.140(Ac.)
Runoff from this stream =      17.570(CFS)
Time of concentration =     5.36 min.
Rainfall intensity =      7.305(In/Hr)
Summary of stream data:

Stream   Flow rate      TC            Rainfall Intensity
 No.       (CFS)       (min)                 (In/Hr)


1       44.496      7.26          6.009
2       17.570      5.36          7.305
Qmax(1) =
         1.000 *    1.000 *    44.496) +
         0.823 *    1.000 *    17.570) + =      58.949
Qmax(2) =
         1.000 *    0.739 *    44.496) +
         1.000 *    1.000 *    17.570) + =      50.440

Total of 2 streams to confluence:
Flow rates before confluence point:
      44.496      17.570
Maximum flow rates at confluence using above data:
       58.949       50.440
Area of streams before confluence:
        9.770        3.140
Results of confluence:
Total flow rate =      58.949(CFS)
Time of concentration =      7.257 min.
Effective stream area after confluence =      12.910(Ac.)
End of computations, total study area =          12.910 (Ac.)
```

```
                San Diego County Rational Hydrology Program

CIVILCADD/CIVILDESIGN Engineering Software,(c)1991-2004 Version 7.4

Rational method hydrology  program based on
San Diego County Flood Control Division 2003 hydrology manual
      Rational Hydrology Study        Date: 10/02/12
----------------------------------------------------------------------
2468 QUARRY CREEK
PROPOSED CONDITIONS
SYSTEM 400
FILE: S400P100
----------------------------------------------------------------------
 *********   Hydrology Study Control Information **********

----------------------------------------------------------------------


Program License Serial Number 4049

----------------------------------------------------------------------
Rational hydrology study storm event year is   100.0
English (in-lb) input data Units used

Map data precipitation entered:
6 hour,  precipitation(inches) =  2.900
24 hour precipitation(inches) =  5.100
P6/P24 =    56.9%
San Diego hydrology manual 'C' values used


++++++++++++++++++++++++++++++++++++++++++++++++++++++++++++++++++++++
Process from Point/Station      400.000 to Point/Station      401.000
**** INITIAL AREA EVALUATION ****
______________________________________________________________________
Decimal fraction soil group A = 0.000
Decimal fraction soil group B = 0.000
Decimal fraction soil group C = 0.000
Decimal fraction soil group D = 1.000
[MEDIUM DENSITY RESIDENTIAL                    ]
(7.3 DU/A or Less       )
Impervious value, Ai = 0.400
Sub-Area C Value = 0.570
Initial subarea total flow distance  =  100.000(Ft.)
Highest elevation =  362.000(Ft.)
Lowest elevation =  361.000(Ft.)
Elevation difference =    1.000(Ft.) Slope =  1.000 %
INITIAL AREA TIME OF CONCENTRATION CALCULATIONS:
The maximum overland flow distance is 65.00 (Ft)
for the top area slope value of   1.00 %, in a development type of
 7.3 DU/A or Less
In Accordance With Table 3-2
Initial Area Time of Concentration =   8.40 minutes
 (for slope value of   1.00 %)
Rainfall intensity (I) =      5.468(In/Hr) for a   100.0 year storm
Effective runoff coefficient used for area (Q=KCIA) is C = 0.570
Subarea runoff =      0.405(CFS)
Total initial stream area =        0.130(Ac.)
```

```
++++++++++++++++++++++++++++++++++++++++++++++++++++++++++++++++++++++
Process from Point/Station      401.000 to Point/Station      402.000
**** STREET FLOW TRAVEL TIME + SUBAREA FLOW ADDITION ****
______________________________________________________________________
Top of street segment elevation =   361.000(Ft.)
End of street segment elevation =   329.000(Ft.)
Length of street segment  =   815.000(Ft.)
Height of curb above gutter flowline  =    6.0(In.)
Width of half street (curb to crown)  =  22.000(Ft.)
Distance from crown to crossfall grade break  =  18.000(Ft.)
Slope from gutter to grade break (v/hz) =   0.020
Slope from grade break to crown (v/hz)  =   0.020
Street flow is on [1] side(s) of the street
Distance from curb to property line  =  10.000(Ft.)
Slope from curb to property line (v/hz) =   0.020
Gutter width =   1.500(Ft.)
Gutter hike from flowline =  1.500(In.)
 Manning's N in gutter =  0.0150
 Manning's N from gutter to grade break =  0.0180
 Manning's N from grade break to crown =  0.0180
Estimated mean flow rate at midpoint of street =      6.049(CFS)
Depth of flow =   0.332(Ft.), Average velocity =   4.099(Ft/s)
Streetflow hydraulics at midpoint of street travel:
Halfstreet flow width =  11.852(Ft.)
Flow velocity =   4.10(Ft/s)
Travel time =    3.31 min.     TC =   11.71  min.
 Adding area flow to street
Decimal fraction soil group A = 0.000
Decimal fraction soil group B = 0.000
Decimal fraction soil group C = 0.000
Decimal fraction soil group D = 1.000
[MEDIUM DENSITY RESIDENTIAL                    ]
(4.3 DU/A or Less       )
Impervious value, Ai = 0.300
Sub-Area C Value = 0.520
Rainfall intensity =      4.412(In/Hr) for a   100.0 year storm
Effective runoff coefficient used for total area
(Q=KCIA) is C = 0.521  CA =      2.633
Subarea runoff =     11.210(CFS) for      4.920(Ac.)
Total runoff =     11.615(CFS)  Total area =       5.050(Ac.)
Street flow at end of street =     11.615(CFS)
Half street flow at end of street =     11.615(CFS)
Depth of flow =   0.402(Ft.), Average velocity =   4.789(Ft/s)
Flow width (from curb towards crown)=  15.344(Ft.)


++++++++++++++++++++++++++++++++++++++++++++++++++++++++++++++++++++++
Process from Point/Station      402.000 to Point/Station      403.000
**** PIPEFLOW TRAVEL TIME (Program estimated size) ****
______________________________________________________________________
Upstream point/station elevation =   329.000(Ft.)
Downstream point/station elevation =   310.000(Ft.)
Pipe length  =   185.00(Ft.)   Manning's N = 0.013
No. of pipes = 1  Required pipe flow  =    11.615(CFS)
Nearest computed pipe diameter  =     15.00(In.)
Calculated individual pipe flow  =    11.615(CFS)
Normal flow depth in pipe =    8.04(In.)
Flow top width inside pipe =   14.96(In.)
Critical depth could not be calculated.
```

```
Pipe flow velocity =     17.36(Ft/s)
Travel time through pipe =    0.18 min.
Time of concentration (TC) =    11.89 min.


++++++++++++++++++++++++++++++++++++++++++++++++++++++++++++++++++++++
Process from Point/Station      402.000 to Point/Station      403.000
**** SUBAREA FLOW ADDITION ****
______________________________________________________________________
Decimal fraction soil group A = 0.000
Decimal fraction soil group B = 0.000
Decimal fraction soil group C = 0.000
Decimal fraction soil group D = 1.000
[UNDISTURBED NATURAL TERRAIN                    ]
(Permanent Open Space   )
Impervious value, Ai = 0.000
Sub-Area C Value = 0.350
Time of concentration =    11.89 min.
Rainfall intensity =      4.370(In/Hr) for a   100.0 year storm
Effective runoff coefficient used for total area
(Q=KCIA) is C = 0.506  CA =      2.804
Subarea runoff =      0.637(CFS) for      0.490(Ac.)
Total runoff =     12.252(CFS)  Total area =       5.540(Ac.)


++++++++++++++++++++++++++++++++++++++++++++++++++++++++++++++++++++++
Process from Point/Station      402.000 to Point/Station      403.000
**** CONFLUENCE OF MAIN STREAMS ****
______________________________________________________________________
The following data inside Main Stream is listed:
In Main Stream number: 1
Stream flow area =      5.540(Ac.)
Runoff from this stream =     12.252(CFS)
Time of concentration =   11.89 min.
Rainfall intensity =     4.370(In/Hr)
Program is now starting with Main Stream No. 2


++++++++++++++++++++++++++++++++++++++++++++++++++++++++++++++++++++++
Process from Point/Station      404.000 to Point/Station      405.000
**** INITIAL AREA EVALUATION ****
______________________________________________________________________
Decimal fraction soil group A = 0.000
Decimal fraction soil group B = 0.000
Decimal fraction soil group C = 0.000
Decimal fraction soil group D = 1.000
[MEDIUM DENSITY RESIDENTIAL                     ]
(7.3 DU/A or Less       )
Impervious value, Ai = 0.400
Sub-Area C Value = 0.570
Initial subarea total flow distance  =   70.000(Ft.)
Highest elevation =  330.000(Ft.)
Lowest elevation =  329.300(Ft.)
Elevation difference =    0.700(Ft.) Slope =  1.000 %
INITIAL AREA TIME OF CONCENTRATION CALCULATIONS:
The maximum overland flow distance is 65.00 (Ft)
for the top area slope value of   1.00 %, in a development type of
 7.3 DU/A or Less
In Accordance With Table 3-2
Initial Area Time of Concentration =   8.40 minutes
```

```
 (for slope value of   1.00 %)
Rainfall intensity (I) =      5.468(In/Hr) for a   100.0 year storm
Effective runoff coefficient used for area (Q=KCIA) is C = 0.570
Subarea runoff =      0.343(CFS)
Total initial stream area =        0.110(Ac.)


++++++++++++++++++++++++++++++++++++++++++++++++++++++++++++++++++++++
Process from Point/Station      405.000 to Point/Station      405.000
**** SUBAREA FLOW ADDITION ****
______________________________________________________________________
Decimal fraction soil group A = 0.000
Decimal fraction soil group B = 0.000
Decimal fraction soil group C = 0.000
Decimal fraction soil group D = 1.000
[MEDIUM DENSITY RESIDENTIAL                    ]
(7.3 DU/A or Less       )
Impervious value, Ai = 0.400
Sub-Area C Value = 0.570
Time of concentration =     8.40 min.
Rainfall intensity =      5.468(In/Hr) for a   100.0 year storm
Effective runoff coefficient used for total area
(Q=KCIA) is C = 0.570  CA =      0.393
Subarea runoff =      1.808(CFS) for      0.580(Ac.)
Total runoff =      2.150(CFS)  Total area =       0.690(Ac.)


++++++++++++++++++++++++++++++++++++++++++++++++++++++++++++++++++++++
Process from Point/Station      405.000 to Point/Station      406.000
**** PIPEFLOW TRAVEL TIME (Program estimated size) ****
______________________________________________________________________
Upstream point/station elevation =   329.300(Ft.)
Downstream point/station elevation =   322.300(Ft.)
Pipe length  =   400.00(Ft.)   Manning's N = 0.013
No. of pipes = 1  Required pipe flow  =     2.150(CFS)
Nearest computed pipe diameter  =      9.00(In.)
Calculated individual pipe flow  =     2.150(CFS)
Normal flow depth in pipe =    7.24(In.)
Flow top width inside pipe =    7.14(In.)
Critical Depth =    7.92(In.)
Pipe flow velocity =      5.65(Ft/s)
Travel time through pipe =    1.18 min.
Time of concentration (TC) =     9.58 min.


++++++++++++++++++++++++++++++++++++++++++++++++++++++++++++++++++++++
Process from Point/Station      405.000 to Point/Station      406.000
**** CONFLUENCE OF MINOR STREAMS ****
______________________________________________________________________
Along Main Stream number: 2 in normal stream number 1
Stream flow area =      0.690(Ac.)
Runoff from this stream =      2.150(CFS)
Time of concentration =    9.58 min.
Rainfall intensity =     5.023(In/Hr)


++++++++++++++++++++++++++++++++++++++++++++++++++++++++++++++++++++++
Process from Point/Station      407.000 to Point/Station      408.000
**** INITIAL AREA EVALUATION ****
______________________________________________________________________
```

```
Decimal fraction soil group A = 0.000
Decimal fraction soil group B = 0.000
Decimal fraction soil group C = 0.000
Decimal fraction soil group D = 1.000
[MEDIUM DENSITY RESIDENTIAL                    ]
(7.3 DU/A or Less       )
Impervious value, Ai = 0.400
Sub-Area C Value = 0.570
Initial subarea total flow distance  =  100.000(Ft.)
Highest elevation =  325.000(Ft.)
Lowest elevation =  324.000(Ft.)
Elevation difference =    1.000(Ft.) Slope =  1.000 %
INITIAL AREA TIME OF CONCENTRATION CALCULATIONS:
The maximum overland flow distance is 65.00 (Ft)
for the top area slope value of   1.00 %, in a development type of
 7.3 DU/A or Less
In Accordance With Table 3-2
Initial Area Time of Concentration =   8.40 minutes
 (for slope value of   1.00 %)
Rainfall intensity (I) =      5.468(In/Hr) for a   100.0 year storm
Effective runoff coefficient used for area (Q=KCIA) is C = 0.570
Subarea runoff =      0.654(CFS)
Total initial stream area =        0.210(Ac.)


++++++++++++++++++++++++++++++++++++++++++++++++++++++++++++++++++++++
Process from Point/Station      408.000 to Point/Station      409.000
**** STREET FLOW TRAVEL TIME + SUBAREA FLOW ADDITION ****
______________________________________________________________________
Top of street segment elevation =   324.000(Ft.)
End of street segment elevation =   320.200(Ft.)
Length of street segment  =   395.000(Ft.)
Height of curb above gutter flowline  =    6.0(In.)
Width of half street (curb to crown)  =  22.000(Ft.)
Distance from crown to crossfall grade break  =  18.000(Ft.)
Slope from gutter to grade break (v/hz) =   0.020
Slope from grade break to crown (v/hz)  =   0.020
Street flow is on [1] side(s) of the street
Distance from curb to property line  =  10.000(Ft.)
Slope from curb to property line (v/hz) =   0.020
Gutter width =   1.500(Ft.)
Gutter hike from flowline =  1.500(In.)
 Manning's N in gutter =  0.0150
 Manning's N from gutter to grade break =  0.0180
 Manning's N from grade break to crown =  0.0180
Estimated mean flow rate at midpoint of street =      5.650(CFS)
Depth of flow =   0.400(Ft.), Average velocity =   2.360(Ft/s)
Streetflow hydraulics at midpoint of street travel:
Halfstreet flow width =  15.240(Ft.)
Flow velocity =   2.36(Ft/s)
Travel time =    2.79 min.     TC =   11.19  min.
 Adding area flow to street
Decimal fraction soil group A = 0.000
Decimal fraction soil group B = 0.000
Decimal fraction soil group C = 0.000
Decimal fraction soil group D = 1.000
[MEDIUM DENSITY RESIDENTIAL                    ]
(7.3 DU/A or Less       )
Impervious value, Ai = 0.400
Sub-Area C Value = 0.570
```

```
Rainfall intensity =      4.545(In/Hr) for a   100.0 year storm
Effective runoff coefficient used for total area
(Q=KCIA) is C = 0.570  CA =      2.326
Subarea runoff =      9.915(CFS) for      3.870(Ac.)
Total runoff =     10.569(CFS)  Total area =       4.080(Ac.)
Street flow at end of street =     10.569(CFS)
Half street flow at end of street =     10.569(CFS)
Depth of flow =   0.484(Ft.), Average velocity =   2.747(Ft/s)
Flow width (from curb towards crown)=  19.431(Ft.)


++++++++++++++++++++++++++++++++++++++++++++++++++++++++++++++++++++++
Process from Point/Station      409.000 to Point/Station      406.000
**** PIPEFLOW TRAVEL TIME (Program estimated size) ****
______________________________________________________________________
Upstream point/station elevation =   320.200(Ft.)
Downstream point/station elevation =   317.300(Ft.)
Pipe length  =   290.00(Ft.)   Manning's N = 0.013
No. of pipes = 1  Required pipe flow  =    10.569(CFS)
Nearest computed pipe diameter  =     21.00(In.)
Calculated individual pipe flow  =    10.569(CFS)
Normal flow depth in pipe =   12.54(In.)
Flow top width inside pipe =   20.60(In.)
Critical Depth =   14.54(In.)
Pipe flow velocity =      7.05(Ft/s)
Travel time through pipe =    0.69 min.
Time of concentration (TC) =    11.87 min.


++++++++++++++++++++++++++++++++++++++++++++++++++++++++++++++++++++++
Process from Point/Station      409.000 to Point/Station      406.000
**** CONFLUENCE OF MINOR STREAMS ****
______________________________________________________________________
Along Main Stream number: 2 in normal stream number 2
Stream flow area =      4.080(Ac.)
Runoff from this stream =     10.569(CFS)
Time of concentration =   11.87 min.
Rainfall intensity =     4.374(In/Hr)
Summary of stream data:

Stream   Flow rate      TC            Rainfall Intensity
 No.       (CFS)       (min)                 (In/Hr)


1        2.150      9.58          5.023
2       10.569     11.87          4.374
Qmax(1) =
         1.000 *    1.000 *     2.150) +
         1.000 *    0.807 *    10.569) + =      10.678
Qmax(2) =
         0.871 *    1.000 *     2.150) +
         1.000 *    1.000 *    10.569) + =      12.441

Total of 2 streams to confluence:
Flow rates before confluence point:
       2.150      10.569
Maximum flow rates at confluence using above data:
       10.678      12.441
Area of streams before confluence:
        0.690       4.080
```

```
Results of confluence:
Total flow rate =     12.441(CFS)
Time of concentration =    11.874 min.
Effective stream area after confluence =      4.770(Ac.)


++++++++++++++++++++++++++++++++++++++++++++++++++++++++++++++++++++++
Process from Point/Station      406.000 to Point/Station      403.000
**** PIPEFLOW TRAVEL TIME (Program estimated size) ****
______________________________________________________________________
Upstream point/station elevation =   317.300(Ft.)
Downstream point/station elevation =   300.000(Ft.)
Pipe length  =   225.00(Ft.)   Manning's N = 0.013
No. of pipes = 1  Required pipe flow  =    12.441(CFS)
Nearest computed pipe diameter  =     15.00(In.)
Calculated individual pipe flow  =    12.441(CFS)
Normal flow depth in pipe =    9.20(In.)
Flow top width inside pipe =   14.61(In.)
Critical depth could not be calculated.
Pipe flow velocity =     15.77(Ft/s)
Travel time through pipe =    0.24 min.
Time of concentration (TC) =    12.11 min.


++++++++++++++++++++++++++++++++++++++++++++++++++++++++++++++++++++++
Process from Point/Station      406.000 to Point/Station      403.000
**** CONFLUENCE OF MAIN STREAMS ****
______________________________________________________________________
The following data inside Main Stream is listed:
In Main Stream number: 2
Stream flow area =      4.770(Ac.)
Runoff from this stream =     12.441(CFS)
Time of concentration =   12.11 min.
Rainfall intensity =     4.318(In/Hr)
Summary of stream data:

Stream   Flow rate      TC            Rainfall Intensity
 No.       (CFS)       (min)                 (In/Hr)


1       12.252     11.89          4.370
2       12.441     12.11          4.318
Qmax(1) =
         1.000 *    1.000 *    12.252) +
         1.000 *    0.982 *    12.441) + =      24.467
Qmax(2) =
         0.988 *    1.000 *    12.252) +
         1.000 *    1.000 *    12.441) + =      24.549

Total of 2 main streams to confluence:
Flow rates before confluence point:
      12.252      12.441
Maximum flow rates at confluence using above data:
       24.467       24.549
Area of streams before confluence:
        5.540        4.770


Results of confluence:
Total flow rate =     24.549(CFS)
```

```
Time of concentration =    12.112 min.
Effective stream area after confluence  =     10.310(Ac.)


++++++++++++++++++++++++++++++++++++++++++++++++++++++++++++++++++++++
Process from Point/Station      403.000 to Point/Station      410.000
**** IMPROVED CHANNEL TRAVEL TIME ****
______________________________________________________________________
Upstream point elevation =   300.000(Ft.)
Downstream point elevation =   259.500(Ft.)
Channel length thru subarea  =   835.000(Ft.)
Channel base width =    0.500(Ft.)
Slope or 'Z' of left channel bank =   2.000
Slope or 'Z' of right channel bank =   2.000
Estimated mean flow rate at midpoint of channel =     25.133(CFS)
Manning's 'N'    = 0.018
Maximum depth of channel  =    1.000(Ft.)
Flow(q) thru subarea =     25.133(CFS)
Depth of flow =   0.946(Ft.), Average velocity =  11.117(Ft/s)
Channel flow top width =    4.282(Ft.)
Flow Velocity =   11.12(Ft/s)
Travel time  =    1.25 min.
Time of concentration =   13.36 min.
Critical depth =      1.438(Ft.)
 Adding area flow to channel
Decimal fraction soil group A = 0.000
Decimal fraction soil group B = 0.000
Decimal fraction soil group C = 0.000
Decimal fraction soil group D = 1.000
[UNDISTURBED NATURAL TERRAIN                  ]
(Permanent Open Space   )
Impervious value, Ai = 0.000
Sub-Area C Value = 0.350
Rainfall intensity =      4.053(In/Hr) for a   100.0 year storm
Effective runoff coefficient used for total area
(Q=KCIA) is C = 0.502  CA =      6.328
Subarea runoff =      1.095(CFS) for      2.300(Ac.)
Total runoff =     25.645(CFS)  Total area =      12.610(Ac.)
Depth of flow =   0.954(Ft.), Average velocity =  11.173(Ft/s)
Critical depth =      1.453(Ft.)


++++++++++++++++++++++++++++++++++++++++++++++++++++++++++++++++++++++
Process from Point/Station      403.000 to Point/Station      410.000
**** CONFLUENCE OF MAIN STREAMS ****
______________________________________________________________________
The following data inside Main Stream is listed:
In Main Stream number: 1
Stream flow area =     12.610(Ac.)
Runoff from this stream =     25.645(CFS)
Time of concentration =   13.36 min.
Rainfall intensity =     4.053(In/Hr)
Program is now starting with Main Stream No. 2


++++++++++++++++++++++++++++++++++++++++++++++++++++++++++++++++++++++
Process from Point/Station      411.000 to Point/Station      412.000
**** INITIAL AREA EVALUATION ****
______________________________________________________________________
Decimal fraction soil group A = 0.000
```

```
Decimal fraction soil group B = 0.000
Decimal fraction soil group C = 0.000
Decimal fraction soil group D = 1.000
[MEDIUM DENSITY RESIDENTIAL                    ]
(7.3 DU/A or Less       )
Impervious value, Ai = 0.400
Sub-Area C Value = 0.570
Initial subarea total flow distance  =   60.000(Ft.)
Highest elevation =  330.000(Ft.)
Lowest elevation =  329.400(Ft.)
Elevation difference =    0.600(Ft.) Slope =  1.000 %
INITIAL AREA TIME OF CONCENTRATION CALCULATIONS:
The maximum overland flow distance is 65.00 (Ft)
for the top area slope value of   1.00 %, in a development type of
 7.3 DU/A or Less
In Accordance With Table 3-2
Initial Area Time of Concentration =   8.40 minutes
 (for slope value of   1.00 %)
Rainfall intensity (I) =      5.468(In/Hr) for a   100.0 year storm
Effective runoff coefficient used for area (Q=KCIA) is C = 0.570
Subarea runoff =      0.374(CFS)
Total initial stream area =        0.120(Ac.)


++++++++++++++++++++++++++++++++++++++++++++++++++++++++++++++++++++++
Process from Point/Station      412.000 to Point/Station      413.000
**** IMPROVED CHANNEL TRAVEL TIME ****
______________________________________________________________________
Upstream point elevation =   329.400(Ft.)
Downstream point elevation =   326.000(Ft.)
Channel length thru subarea  =   250.000(Ft.)
Channel base width =    0.500(Ft.)
Slope or 'Z' of left channel bank =   2.000
Slope or 'Z' of right channel bank =   2.000
Estimated mean flow rate at midpoint of channel =      1.735(CFS)
Manning's 'N'    = 0.015
Maximum depth of channel  =    1.000(Ft.)
Flow(q) thru subarea =      1.735(CFS)
Depth of flow =   0.356(Ft.), Average velocity =   4.030(Ft/s)
Channel flow top width =    1.922(Ft.)
Flow Velocity =    4.03(Ft/s)
Travel time  =    1.03 min.
Time of concentration =    9.43 min.
Critical depth =      0.434(Ft.)
 Adding area flow to channel
Decimal fraction soil group A = 0.000
Decimal fraction soil group B = 0.000
Decimal fraction soil group C = 0.000
Decimal fraction soil group D = 1.000
[MEDIUM DENSITY RESIDENTIAL                    ]
(7.3 DU/A or Less       )
Impervious value, Ai = 0.400
Sub-Area C Value = 0.570
Rainfall intensity =      5.073(In/Hr) for a   100.0 year storm
Effective runoff coefficient used for total area
(Q=KCIA) is C = 0.570  CA =      0.599
Subarea runoff =      2.662(CFS) for      0.930(Ac.)
Total runoff =      3.036(CFS)  Total area =       1.050(Ac.)
Depth of flow =   0.460(Ft.), Average velocity =   4.650(Ft/s)
Critical depth =      0.566(Ft.)
```

```
++++++++++++++++++++++++++++++++++++++++++++++++++++++++++++++++++++++
Process from Point/Station      413.000 to Point/Station      414.000
**** PIPEFLOW TRAVEL TIME (Program estimated size) ****
______________________________________________________________________
Upstream point/station elevation =   326.000(Ft.)
Downstream point/station elevation =   320.500(Ft.)
Pipe length  =   375.00(Ft.)   Manning's N = 0.013
No. of pipes = 1  Required pipe flow  =     3.036(CFS)
Nearest computed pipe diameter  =     12.00(In.)
Calculated individual pipe flow  =     3.036(CFS)
Normal flow depth in pipe =    7.42(In.)
Flow top width inside pipe =   11.66(In.)
Critical Depth =    8.96(In.)
Pipe flow velocity =      5.95(Ft/s)
Travel time through pipe =    1.05 min.
Time of concentration (TC) =    10.48 min.


++++++++++++++++++++++++++++++++++++++++++++++++++++++++++++++++++++++
Process from Point/Station      413.000 to Point/Station      414.000
**** SUBAREA FLOW ADDITION ****
______________________________________________________________________
Decimal fraction soil group A = 0.000
Decimal fraction soil group B = 0.000
Decimal fraction soil group C = 0.000
Decimal fraction soil group D = 1.000
[MEDIUM DENSITY RESIDENTIAL                    ]
(7.3 DU/A or Less       )
Impervious value, Ai = 0.400
Sub-Area C Value = 0.570
Time of concentration =    10.48 min.
Rainfall intensity =      4.739(In/Hr) for a   100.0 year storm
Effective runoff coefficient used for total area
(Q=KCIA) is C = 0.570  CA =      2.816
Subarea runoff =     10.309(CFS) for      3.890(Ac.)
Total runoff =     13.345(CFS)  Total area =       4.940(Ac.)


++++++++++++++++++++++++++++++++++++++++++++++++++++++++++++++++++++++
Process from Point/Station      414.000 to Point/Station      415.000
**** PIPEFLOW TRAVEL TIME (Program estimated size) ****
______________________________________________________________________
Upstream point/station elevation =   320.500(Ft.)
Downstream point/station elevation =   316.600(Ft.)
Pipe length  =   430.00(Ft.)   Manning's N = 0.013
No. of pipes = 1  Required pipe flow  =    13.345(CFS)
Nearest computed pipe diameter  =     21.00(In.)
Calculated individual pipe flow  =    13.345(CFS)
Normal flow depth in pipe =   15.35(In.)
Flow top width inside pipe =   18.62(In.)
Critical Depth =   16.32(In.)
Pipe flow velocity =      7.08(Ft/s)
Travel time through pipe =    1.01 min.
Time of concentration (TC) =    11.50 min.


++++++++++++++++++++++++++++++++++++++++++++++++++++++++++++++++++++++
Process from Point/Station      414.000 to Point/Station      415.000
```

```
**** SUBAREA FLOW ADDITION ****
_____________________________________________________________________
Decimal fraction soil group A = 0.000
Decimal fraction soil group B = 0.000
Decimal fraction soil group C = 0.000
Decimal fraction soil group D = 1.000
[MEDIUM DENSITY RESIDENTIAL                    ]
(7.3 DU/A or Less        )
Impervious value, Ai = 0.400
Sub-Area C Value = 0.570
Time of concentration =    11.50 min.
Rainfall intensity =      4.466(In/Hr) for a   100.0 year storm
Effective runoff coefficient used for total area
(Q=KCIA) is C = 0.570  CA =      4.212
Subarea runoff =      5.467(CFS) for      2.450(Ac.)
Total runoff =     18.812(CFS)  Total area =       7.390(Ac.)


++++++++++++++++++++++++++++++++++++++++++++++++++++++++++++++++++++++
Process from Point/Station      415.000 to Point/Station      416.000
**** PIPEFLOW TRAVEL TIME (Program estimated size) ****
_____________________________________________________________________
Upstream point/station elevation =   316.600(Ft.)
Downstream point/station elevation =   306.000(Ft.)
Pipe length  =   280.00(Ft.)   Manning's N = 0.013
No. of pipes = 1  Required pipe flow  =    18.812(CFS)
Nearest computed pipe diameter  =     18.00(In.)
Calculated individual pipe flow  =    18.812(CFS)
Normal flow depth in pipe =   13.62(In.)
Flow top width inside pipe =   15.45(In.)
Critical depth could not be calculated.
Pipe flow velocity =     13.12(Ft/s)
Travel time through pipe =    0.36 min.
Time of concentration (TC) =    11.85 min.


++++++++++++++++++++++++++++++++++++++++++++++++++++++++++++++++++++++
Process from Point/Station      415.000 to Point/Station      416.000
**** CONFLUENCE OF MINOR STREAMS ****
_____________________________________________________________________
Along Main Stream number: 2 in normal stream number 1
Stream flow area =      7.390(Ac.)
Runoff from this stream =     18.812(CFS)
Time of concentration =   11.85 min.
Rainfall intensity =     4.379(In/Hr)


++++++++++++++++++++++++++++++++++++++++++++++++++++++++++++++++++++++
Process from Point/Station      417.000 to Point/Station      418.000
**** INITIAL AREA EVALUATION ****
_____________________________________________________________________
Decimal fraction soil group A = 0.000
Decimal fraction soil group B = 0.000
Decimal fraction soil group C = 0.000
Decimal fraction soil group D = 1.000
[MEDIUM DENSITY RESIDENTIAL                    ]
(7.3 DU/A or Less        )
Impervious value, Ai = 0.400
Sub-Area C Value = 0.570
Initial subarea total flow distance  =  100.000(Ft.)
```

```
Highest elevation =  308.000(Ft.)
Lowest elevation =  307.000(Ft.)
Elevation difference =    1.000(Ft.) Slope =  1.000 %
INITIAL AREA TIME OF CONCENTRATION CALCULATIONS:
The maximum overland flow distance is 65.00 (Ft)
for the top area slope value of   1.00 %, in a development type of
 7.3 DU/A or Less
In Accordance With Table 3-2
Initial Area Time of Concentration =   8.40 minutes
 (for slope value of   1.00 %)
Rainfall intensity (I) =      5.468(In/Hr) for a   100.0 year storm
Effective runoff coefficient used for area (Q=KCIA) is C = 0.570
Subarea runoff =      0.467(CFS)
Total initial stream area =        0.150(Ac.)


++++++++++++++++++++++++++++++++++++++++++++++++++++++++++++++++++++++
Process from Point/Station      418.000 to Point/Station      419.000
**** STREET FLOW TRAVEL TIME + SUBAREA FLOW ADDITION ****
______________________________________________________________________
Top of street segment elevation =   307.000(Ft.)
End of street segment elevation =   303.000(Ft.)
Length of street segment  =   280.000(Ft.)
Height of curb above gutter flowline  =    6.0(In.)
Width of half street (curb to crown)  =  22.000(Ft.)
Distance from crown to crossfall grade break  =  18.000(Ft.)
Slope from gutter to grade break (v/hz) =   0.020
Slope from grade break to crown (v/hz)  =   0.020
Street flow is on [1] side(s) of the street
Distance from curb to property line  =  10.000(Ft.)
Slope from curb to property line (v/hz) =   0.020
Gutter width =   1.500(Ft.)
Gutter hike from flowline =  1.500(In.)
 Manning's N in gutter =  0.0150
 Manning's N from gutter to grade break =  0.0180
 Manning's N from grade break to crown =  0.0180
Estimated mean flow rate at midpoint of street =      2.214(CFS)
Depth of flow =   0.288(Ft.), Average velocity =   2.201(Ft/s)
Streetflow hydraulics at midpoint of street travel:
Halfstreet flow width =   9.669(Ft.)
Flow velocity =   2.20(Ft/s)
Travel time =    2.12 min.     TC =   10.52  min.
 Adding area flow to street
Decimal fraction soil group A = 0.000
Decimal fraction soil group B = 0.000
Decimal fraction soil group C = 0.000
Decimal fraction soil group D = 1.000
[MEDIUM DENSITY RESIDENTIAL                  ]
(7.3 DU/A or Less       )
Impervious value, Ai = 0.400
Sub-Area C Value = 0.570
Rainfall intensity =      4.729(In/Hr) for a   100.0 year storm
Effective runoff coefficient used for total area
(Q=KCIA) is C = 0.570  CA =      0.821
Subarea runoff =      3.414(CFS) for      1.290(Ac.)
Total runoff =      3.882(CFS)  Total area =       1.440(Ac.)
Street flow at end of street =      3.882(CFS)
Half street flow at end of street =      3.882(CFS)
Depth of flow =   0.338(Ft.), Average velocity =   2.509(Ft/s)
Flow width (from curb towards crown)=  12.149(Ft.)
```

```
++++++++++++++++++++++++++++++++++++++++++++++++++++++++++++++++++++++
Process from Point/Station      419.000 to Point/Station      416.000
**** PIPEFLOW TRAVEL TIME (Program estimated size) ****
______________________________________________________________________
Upstream point/station elevation =   303.000(Ft.)
Downstream point/station elevation =   301.000(Ft.)
Pipe length  =   200.00(Ft.)   Manning's N = 0.013
No. of pipes = 1  Required pipe flow  =     3.882(CFS)
Nearest computed pipe diameter  =     15.00(In.)
Calculated individual pipe flow  =     3.882(CFS)
Normal flow depth in pipe =    8.38(In.)
Flow top width inside pipe =   14.90(In.)
Critical Depth =    9.55(In.)
Pipe flow velocity =      5.50(Ft/s)
Travel time through pipe =    0.61 min.
Time of concentration (TC) =    11.13 min.


++++++++++++++++++++++++++++++++++++++++++++++++++++++++++++++++++++++
Process from Point/Station      419.000 to Point/Station      416.000
**** CONFLUENCE OF MINOR STREAMS ****
______________________________________________________________________
Along Main Stream number: 2 in normal stream number 2
Stream flow area =      1.440(Ac.)
Runoff from this stream =      3.882(CFS)
Time of concentration =   11.13 min.
Rainfall intensity =     4.561(In/Hr)
Summary of stream data:

Stream   Flow rate      TC            Rainfall Intensity
 No.       (CFS)       (min)                 (In/Hr)


1       18.812     11.85          4.379
2        3.882     11.13          4.561
Qmax(1) =
         1.000 *    1.000 *    18.812) +
         0.960 *    1.000 *     3.882) + =      22.539
Qmax(2) =
         1.000 *    0.939 *    18.812) +
         1.000 *    1.000 *     3.882) + =      21.542

Total of 2 streams to confluence:
Flow rates before confluence point:
      18.812       3.882
Maximum flow rates at confluence using above data:
       22.539       21.542
Area of streams before confluence:
        7.390        1.440
Results of confluence:
Total flow rate =     22.539(CFS)
Time of concentration =    11.852 min.
Effective stream area after confluence =      8.830(Ac.)


++++++++++++++++++++++++++++++++++++++++++++++++++++++++++++++++++++++
Process from Point/Station      416.000 to Point/Station      420.000
**** PIPEFLOW TRAVEL TIME (Program estimated size) ****
```

```
Upstream point/station elevation =   301.000(Ft.)
Downstream point/station elevation =   289.000(Ft.)
Pipe length  =    45.00(Ft.)   Manning's N = 0.013
No. of pipes = 1  Required pipe flow  =    22.539(CFS)
Nearest computed pipe diameter  =     15.00(In.)
Calculated individual pipe flow  =    22.539(CFS)
Normal flow depth in pipe =    9.04(In.)
Flow top width inside pipe =   14.68(In.)
Critical depth could not be calculated.
Pipe flow velocity =     29.19(Ft/s)
Travel time through pipe =    0.03 min.
Time of concentration (TC) =    11.88 min.


++++++++++++++++++++++++++++++++++++++++++++++++++++++++++++++++++++++
Process from Point/Station      416.000 to Point/Station      420.000
**** SUBAREA FLOW ADDITION ****

Decimal fraction soil group A = 0.000
Decimal fraction soil group B = 0.000
Decimal fraction soil group C = 0.000
Decimal fraction soil group D = 1.000
[UNDISTURBED NATURAL TERRAIN                    ]
(Permanent Open Space   )
Impervious value, Ai = 0.000
Sub-Area C Value = 0.350
Time of concentration =    11.88 min.
Rainfall intensity =      4.373(In/Hr) for a   100.0 year storm
Effective runoff coefficient used for total area
(Q=KCIA) is C = 0.558  CA =      5.205
Subarea runoff =      0.221(CFS) for      0.490(Ac.)
Total runoff =     22.760(CFS)  Total area =       9.320(Ac.)


++++++++++++++++++++++++++++++++++++++++++++++++++++++++++++++++++++++
Process from Point/Station      420.000 to Point/Station      421.000
**** PIPEFLOW TRAVEL TIME (Program estimated size) ****

Upstream point/station elevation =   289.000(Ft.)
Downstream point/station elevation =   262.000(Ft.)
Pipe length  =    65.00(Ft.)   Manning's N = 0.013
No. of pipes = 1  Required pipe flow  =    22.760(CFS)
Nearest computed pipe diameter  =     12.00(In.)
Calculated individual pipe flow  =    22.760(CFS)
Normal flow depth in pipe =    9.75(In.)
Flow top width inside pipe =    9.37(In.)
Critical depth could not be calculated.
Pipe flow velocity =     33.33(Ft/s)
Travel time through pipe =    0.03 min.
Time of concentration (TC) =    11.91 min.


++++++++++++++++++++++++++++++++++++++++++++++++++++++++++++++++++++++
Process from Point/Station      421.000 to Point/Station      410.000
**** IMPROVED CHANNEL TRAVEL TIME ****

Upstream point elevation =   262.000(Ft.)
Downstream point elevation =   259.500(Ft.)
Channel length thru subarea  =    70.000(Ft.)
```

```
Channel base width =    0.500(Ft.)
Slope or 'Z' of left channel bank =   2.000
Slope or 'Z' of right channel bank =   2.000
Manning's 'N'    = 0.018
Maximum depth of channel  =    3.000(Ft.)
Flow(q) thru subarea =     22.760(CFS)
Depth of flow =   0.967(Ft.), Average velocity =   9.669(Ft/s)
Channel flow top width =    4.368(Ft.)
Flow Velocity =    9.67(Ft/s)
Travel time  =    0.12 min.
Time of concentration =   12.03 min.
Critical depth =      1.398(Ft.)


++++++++++++++++++++++++++++++++++++++++++++++++++++++++++++++++++++++
Process from Point/Station      421.000 to Point/Station      410.000
**** CONFLUENCE OF MAIN STREAMS ****
______________________________________________________________________
The following data inside Main Stream is listed:
In Main Stream number: 2
Stream flow area =      9.320(Ac.)
Runoff from this stream =     22.760(CFS)
Time of concentration =   12.03 min.
Rainfall intensity =     4.337(In/Hr)
Summary of stream data:

Stream   Flow rate      TC            Rainfall Intensity
 No.       (CFS)       (min)                 (In/Hr)


1       25.645     13.36          4.053
2       22.760     12.03          4.337
Qmax(1) =
         1.000 *    1.000 *    25.645) +
         0.934 *    1.000 *    22.760) + =      46.913
Qmax(2) =
         1.000 *    0.900 *    25.645) +
         1.000 *    1.000 *    22.760) + =      45.846

Total of 2 main streams to confluence:
Flow rates before confluence point:
      25.645      22.760
Maximum flow rates at confluence using above data:
       46.913       45.846
Area of streams before confluence:
       12.610        9.320


Results of confluence:
Total flow rate =     46.913(CFS)
Time of concentration =    13.364 min.
Effective stream area after confluence  =     21.930(Ac.)


++++++++++++++++++++++++++++++++++++++++++++++++++++++++++++++++++++++
Process from Point/Station      410.000 to Point/Station      422.000
**** IMPROVED CHANNEL TRAVEL TIME ****
______________________________________________________________________
Upstream point elevation =   259.500(Ft.)
Downstream point elevation =   212.000(Ft.)
```

```
Channel length thru subarea  =   909.000(Ft.)
Channel base width =    0.500(Ft.)
Slope or 'Z' of left channel bank =   2.000
Slope or 'Z' of right channel bank =   2.000
Manning's 'N'    = 0.018
Maximum depth of channel  =    1.000(Ft.)
Flow(q) thru subarea =     46.913(CFS)
Depth of flow =   1.173(Ft.), Average velocity =  14.302(Ft/s)
!!Warning: Water is above left or right bank elevations
Channel flow top width =    4.500(Ft.)
Flow Velocity =   14.30(Ft/s)
Travel time  =    1.06 min.
Time of concentration =   14.42 min.
Critical depth =      1.938(Ft.)
ERROR - Channel depth exceeds maximum allowable depth


++++++++++++++++++++++++++++++++++++++++++++++++++++++++++++++++++++++
Process from Point/Station      422.000 to Point/Station      423.000
**** IMPROVED CHANNEL TRAVEL TIME ****
______________________________________________________________________
Upstream point elevation =   212.000(Ft.)
Downstream point elevation =   115.000(Ft.)
Channel length thru subarea  =   217.000(Ft.)
Channel base width =    0.500(Ft.)
Slope or 'Z' of left channel bank =   2.000
Slope or 'Z' of right channel bank =   2.000
Estimated mean flow rate at midpoint of channel =     49.266(CFS)
Manning's 'N'    = 0.018
Maximum depth of channel  =    1.000(Ft.)
Flow(q) thru subarea =     49.266(CFS)
Depth of flow =   0.786(Ft.), Average velocity =  30.246(Ft/s)
Channel flow top width =    3.644(Ft.)
Flow Velocity =   30.25(Ft/s)
Travel time  =    0.12 min.
Time of concentration =   14.54 min.
Critical depth =      2.000(Ft.)
 Adding area flow to channel
Decimal fraction soil group A = 0.000
Decimal fraction soil group B = 0.000
Decimal fraction soil group C = 0.000
Decimal fraction soil group D = 1.000
[UNDISTURBED NATURAL TERRAIN                  ]
(Permanent Open Space   )
Impervious value, Ai = 0.000
Sub-Area C Value = 0.350
Rainfall intensity =      3.838(In/Hr) for a   100.0 year storm
Effective runoff coefficient used for total area
(Q=KCIA) is C = 0.491  CA =     13.436
Subarea runoff =      4.652(CFS) for      5.440(Ac.)
Total runoff =     51.564(CFS)  Total area =      27.370(Ac.)
Depth of flow =   0.801(Ft.), Average velocity =  30.594(Ft/s)
Critical depth =      2.047(Ft.)


++++++++++++++++++++++++++++++++++++++++++++++++++++++++++++++++++++++
Process from Point/Station      423.000 to Point/Station      452.000
**** PIPEFLOW TRAVEL TIME (Program estimated size) ****
______________________________________________________________________
Upstream point/station elevation =   115.000(Ft.)
```

```
Downstream point/station elevation =   114.500(Ft.)
Pipe length  =    58.00(Ft.)   Manning's N = 0.013
No. of pipes = 1  Required pipe flow  =    51.564(CFS)
Nearest computed pipe diameter  =     36.00(In.)
Calculated individual pipe flow  =    51.564(CFS)
Normal flow depth in pipe =   25.08(In.)
Flow top width inside pipe =   33.10(In.)
Critical Depth =   28.04(In.)
Pipe flow velocity =      9.80(Ft/s)
Travel time through pipe =    0.10 min.
Time of concentration (TC) =    14.64 min.


++++++++++++++++++++++++++++++++++++++++++++++++++++++++++++++++++++++
Process from Point/Station      423.000 to Point/Station      452.000
**** CONFLUENCE OF MAIN STREAMS ****
______________________________________________________________________
The following data inside Main Stream is listed:
In Main Stream number: 1
Stream flow area =     27.370(Ac.)
Runoff from this stream =     51.564(CFS)
Time of concentration =   14.64 min.
Rainfall intensity =     3.821(In/Hr)
Program is now starting with Main Stream No. 2


++++++++++++++++++++++++++++++++++++++++++++++++++++++++++++++++++++++
Process from Point/Station      424.000 to Point/Station      425.000
**** INITIAL AREA EVALUATION ****
______________________________________________________________________
Decimal fraction soil group A = 0.000
Decimal fraction soil group B = 0.000
Decimal fraction soil group C = 0.000
Decimal fraction soil group D = 1.000
[UNDISTURBED NATURAL TERRAIN                    ]
(Permanent Open Space   )
Impervious value, Ai = 0.000
Sub-Area C Value = 0.350
Initial subarea total flow distance  =   60.000(Ft.)
Highest elevation =  260.000(Ft.)
Lowest elevation =  230.000(Ft.)
Elevation difference =   30.000(Ft.) Slope = 50.000 %
INITIAL AREA TIME OF CONCENTRATION CALCULATIONS:
The maximum overland flow distance is 100.00 (Ft)
for the top area slope value of  50.00 %, in a development type of
 Permanent Open Space
In Accordance With Figure 3-3
Initial Area Time of Concentration =   3.66 minutes
TC = [1.8*(1.1-C)*distance(Ft.)^.5)/(% slope^(1/3)]
TC = [1.8*(1.1-0.3500)*( 100.000^.5)/(  50.000^(1/3)]=   3.66
Calculated TC of    3.664 minutes is less than 5 minutes,
 resetting TC to 5.0 minutes for rainfall intensity calculations
Rainfall intensity (I) =      7.641(In/Hr) for a   100.0 year storm
Effective runoff coefficient used for area (Q=KCIA) is C = 0.350
Subarea runoff =      0.134(CFS)
Total initial stream area =        0.050(Ac.)


++++++++++++++++++++++++++++++++++++++++++++++++++++++++++++++++++++++
Process from Point/Station      425.000 to Point/Station      426.000
```

```
**** IMPROVED CHANNEL TRAVEL TIME ****
_____________________________________________________________________
Upstream point elevation =   230.000(Ft.)
Downstream point elevation =   216.000(Ft.)
Channel length thru subarea  =   300.000(Ft.)
Channel base width =    0.500(Ft.)
Slope or 'Z' of left channel bank =   2.000
Slope or 'Z' of right channel bank =   2.000
Manning's 'N'    = 0.018
Maximum depth of channel  =    3.000(Ft.)
Flow(q) thru subarea =      0.134(CFS)
Depth of flow =   0.076(Ft.), Average velocity =   2.701(Ft/s)
Channel flow top width =    0.804(Ft.)
Flow Velocity =    2.70(Ft/s)
Travel time  =    1.85 min.
Time of concentration =    5.52 min.
Critical depth =      0.111(Ft.)


++++++++++++++++++++++++++++++++++++++++++++++++++++++++++++++++++++++
Process from Point/Station      426.000 to Point/Station      427.000
**** IMPROVED CHANNEL TRAVEL TIME ****
_____________________________________________________________________
Upstream point elevation =   216.000(Ft.)
Downstream point elevation =   138.000(Ft.)
Channel length thru subarea  =   188.000(Ft.)
Channel base width =    0.500(Ft.)
Slope or 'Z' of left channel bank =   2.000
Slope or 'Z' of right channel bank =   2.000
Estimated mean flow rate at midpoint of channel =      2.218(CFS)
Manning's 'N'    = 0.018
Maximum depth of channel  =    3.000(Ft.)
Flow(q) thru subarea =      2.218(CFS)
Depth of flow =   0.190(Ft.), Average velocity =  13.228(Ft/s)
Channel flow top width =    1.261(Ft.)
Flow Velocity =   13.23(Ft/s)
Travel time  =    0.24 min.
Time of concentration =    5.75 min.
Critical depth =      0.488(Ft.)
 Adding area flow to channel
Decimal fraction soil group A = 0.000
Decimal fraction soil group B = 0.000
Decimal fraction soil group C = 0.000
Decimal fraction soil group D = 1.000
[UNDISTURBED NATURAL TERRAIN                  ]
(Permanent Open Space   )
Impervious value, Ai = 0.000
Sub-Area C Value = 0.350
Rainfall intensity =      6.980(In/Hr) for a   100.0 year storm
Effective runoff coefficient used for total area
(Q=KCIA) is C = 0.350  CA =      0.609
Subarea runoff =      4.117(CFS) for      1.690(Ac.)
Total runoff =      4.251(CFS)  Total area =      1.740(Ac.)
Depth of flow =   0.263(Ft.), Average velocity =  15.741(Ft/s)
Critical depth =      0.664(Ft.)


++++++++++++++++++++++++++++++++++++++++++++++++++++++++++++++++++++++
Process from Point/Station      427.000 to Point/Station      428.000
**** IMPROVED CHANNEL TRAVEL TIME ****
```

```
Upstream point elevation =   138.000(Ft.)
Downstream point elevation =   130.500(Ft.)
Channel length thru subarea  =   235.000(Ft.)
Channel base width =    0.000(Ft.)
Slope or 'Z' of left channel bank =   4.000
Slope or 'Z' of right channel bank =   4.000
Manning's 'N'    = 0.030
Maximum depth of channel  =    1.000(Ft.)
Flow(q) thru subarea =      4.251(CFS)
Depth of flow =   0.541(Ft.), Average velocity =   3.628(Ft/s)
Channel flow top width =    4.330(Ft.)
Flow Velocity =    3.63(Ft/s)
Travel time  =    1.08 min.
Time of concentration =    6.83 min.
Critical depth =      0.586(Ft.)


++++++++++++++++++++++++++++++++++++++++++++++++++++++++++++++++++++++
Process from Point/Station      428.000 to Point/Station      428.000
**** SUBAREA FLOW ADDITION ****
----------------------------------------------------------------------
Decimal fraction soil group A = 0.000
Decimal fraction soil group B = 0.000
Decimal fraction soil group C = 0.000
Decimal fraction soil group D = 1.000
[MEDIUM DENSITY RESIDENTIAL                    ]
(14.5 DU/A or Less      )
Impervious value, Ai = 0.500
Sub-Area C Value = 0.630
Time of concentration =     6.83 min.
Rainfall intensity =      6.247(In/Hr) for a   100.0 year storm
Effective runoff coefficient used for total area
(Q=KCIA) is C = 0.500  CA =      1.875
Subarea runoff =      7.465(CFS) for      2.010(Ac.)
Total runoff =     11.716(CFS)  Total area =       3.750(Ac.)


++++++++++++++++++++++++++++++++++++++++++++++++++++++++++++++++++++++
Process from Point/Station      428.000 to Point/Station      452.000
**** PIPEFLOW TRAVEL TIME (Program estimated size) ****
----------------------------------------------------------------------
Upstream point/station elevation =   128.000(Ft.)
Downstream point/station elevation =   114.500(Ft.)
Pipe length  =   332.00(Ft.)   Manning's N = 0.013
No. of pipes = 1  Required pipe flow  =    11.716(CFS)
Nearest computed pipe diameter  =     15.00(In.)
Calculated individual pipe flow  =    11.716(CFS)
Normal flow depth in pipe =   11.12(In.)
Flow top width inside pipe =   13.14(In.)
Critical depth could not be calculated.
Pipe flow velocity =     12.01(Ft/s)
Travel time through pipe =    0.46 min.
Time of concentration (TC) =     7.29 min.


++++++++++++++++++++++++++++++++++++++++++++++++++++++++++++++++++++++
Process from Point/Station      428.000 to Point/Station      452.000
**** CONFLUENCE OF MAIN STREAMS ****
----------------------------------------------------------------------
```

```
The following data inside Main Stream is listed:
In Main Stream number: 2
Stream flow area =      3.750(Ac.)
Runoff from this stream =     11.716(CFS)
Time of concentration =    7.29 min.
Rainfall intensity =     5.990(In/Hr)
Summary of stream data:

Stream   Flow rate      TC            Rainfall Intensity
 No.       (CFS)       (min)                 (In/Hr)


1       51.564     14.64          3.821
2       11.716      7.29          5.990
Qmax(1) =
         1.000 *    1.000 *    51.564) +
         0.638 *    1.000 *    11.716) + =      59.037
Qmax(2) =
         1.000 *    0.498 *    51.564) +
         1.000 *    1.000 *    11.716) + =      37.398

Total of 2 main streams to confluence:
Flow rates before confluence point:
      51.564      11.716
Maximum flow rates at confluence using above data:
       59.037       37.398
Area of streams before confluence:
       27.370        3.750


Results of confluence:
Total flow rate =     59.037(CFS)
Time of concentration =    14.642 min.
Effective stream area after confluence  =     31.120(Ac.)


++++++++++++++++++++++++++++++++++++++++++++++++++++++++++++++++++++++
Process from Point/Station      452.000 to Point/Station      454.000
**** PIPEFLOW TRAVEL TIME (Program estimated size) ****
______________________________________________________________________
Upstream point/station elevation =   114.500(Ft.)
Downstream point/station elevation =   107.000(Ft.)
Pipe length  =   238.00(Ft.)   Manning's N = 0.013
No. of pipes = 1  Required pipe flow  =    59.037(CFS)
Nearest computed pipe diameter  =     30.00(In.)
Calculated individual pipe flow  =    59.037(CFS)
Normal flow depth in pipe =   20.48(In.)
Flow top width inside pipe =   27.92(In.)
Critical depth could not be calculated.
Pipe flow velocity =     16.52(Ft/s)
Travel time through pipe =    0.24 min.
Time of concentration (TC) =    14.88 min.


++++++++++++++++++++++++++++++++++++++++++++++++++++++++++++++++++++++
Process from Point/Station      452.000 to Point/Station      454.000
**** CONFLUENCE OF MINOR STREAMS ****
______________________________________________________________________
Along Main Stream number: 1 in normal stream number 1
Stream flow area =     31.120(Ac.)
```

```
Runoff from this stream =      59.037(CFS)
Time of concentration =   14.88 min.
Rainfall intensity =     3.781(In/Hr)


++++++++++++++++++++++++++++++++++++++++++++++++++++++++++++++++++++++
Process from Point/Station      433.000 to Point/Station      434.000
**** INITIAL AREA EVALUATION ****
______________________________________________________________________
Decimal fraction soil group A = 0.000
Decimal fraction soil group B = 0.000
Decimal fraction soil group C = 0.000
Decimal fraction soil group D = 1.000
[UNDISTURBED NATURAL TERRAIN                    ]
(Permanent Open Space   )
Impervious value, Ai = 0.000
Sub-Area C Value = 0.350
Initial subarea total flow distance  =   63.000(Ft.)
Highest elevation =  196.000(Ft.)
Lowest elevation =  166.000(Ft.)
Elevation difference =   30.000(Ft.) Slope = 47.619 %
INITIAL AREA TIME OF CONCENTRATION CALCULATIONS:
The maximum overland flow distance is 100.00 (Ft)
for the top area slope value of  47.62 %, in a development type of
 Permanent Open Space
In Accordance With Figure 3-3
Initial Area Time of Concentration =   3.72 minutes
TC = [1.8*(1.1-C)*distance(Ft.)^.5)/(% slope^(1/3)]
TC = [1.8*(1.1-0.3500)*( 100.000^.5)/(  47.619^(1/3)]=   3.72
Calculated TC of    3.725 minutes is less than 5 minutes,
 resetting TC to 5.0 minutes for rainfall intensity calculations
Rainfall intensity (I) =      7.641(In/Hr) for a   100.0 year storm
Effective runoff coefficient used for area (Q=KCIA) is C = 0.350
Subarea runoff =      0.053(CFS)
Total initial stream area =        0.020(Ac.)


++++++++++++++++++++++++++++++++++++++++++++++++++++++++++++++++++++++
Process from Point/Station      434.000 to Point/Station      435.000
**** IMPROVED CHANNEL TRAVEL TIME ****
______________________________________________________________________
Upstream point elevation =   166.000(Ft.)
Downstream point elevation =   151.800(Ft.)
Channel length thru subarea  =   269.000(Ft.)
Channel base width =    0.500(Ft.)
Slope or 'Z' of left channel bank =   2.000
Slope or 'Z' of right channel bank =   2.000
Manning's 'N'    = 0.018
Maximum depth of channel  =    1.000(Ft.)
Flow(q) thru subarea =      0.053(CFS)
Depth of flow =   0.043(Ft.), Average velocity =   2.096(Ft/s)
Channel flow top width =    0.674(Ft.)
Flow Velocity =    2.10(Ft/s)
Travel time  =    2.14 min.
Time of concentration =    5.86 min.
Critical depth =      0.064(Ft.)


++++++++++++++++++++++++++++++++++++++++++++++++++++++++++++++++++++++
Process from Point/Station      435.000 to Point/Station      436.000
```

```
**** IMPROVED CHANNEL TRAVEL TIME ****
_____________________________________________________________________
Upstream point elevation =   151.800(Ft.)
Downstream point elevation =   113.000(Ft.)
Channel length thru subarea  =    88.000(Ft.)
Channel base width =    0.500(Ft.)
Slope or 'Z' of left channel bank =   2.000
Slope or 'Z' of right channel bank =   2.000
Estimated mean flow rate at midpoint of channel =      1.069(CFS)
Manning's 'N'    = 0.018
Maximum depth of channel  =    1.000(Ft.)
Flow(q) thru subarea =      1.069(CFS)
Depth of flow =   0.128(Ft.), Average velocity =  11.034(Ft/s)
Channel flow top width =    1.013(Ft.)
Flow Velocity =   11.03(Ft/s)
Travel time  =    0.13 min.
Time of concentration =    6.00 min.
Critical depth =      0.342(Ft.)
 Adding area flow to channel
Decimal fraction soil group A = 0.000
Decimal fraction soil group B = 0.000
Decimal fraction soil group C = 0.000
Decimal fraction soil group D = 1.000
[UNDISTURBED NATURAL TERRAIN                  ]
(Permanent Open Space   )
Impervious value, Ai = 0.000
Sub-Area C Value = 0.350
Rainfall intensity =      6.796(In/Hr) for a   100.0 year storm
Effective runoff coefficient used for total area
(Q=KCIA) is C = 0.350  CA =      0.297
Subarea runoff =      1.968(CFS) for      0.830(Ac.)
Total runoff =      2.022(CFS)  Total area =       0.850(Ac.)
Depth of flow =   0.179(Ft.), Average velocity =  13.186(Ft/s)
Critical depth =      0.469(Ft.)


++++++++++++++++++++++++++++++++++++++++++++++++++++++++++++++++++++++
Process from Point/Station      436.000 to Point/Station      454.000
**** PIPEFLOW TRAVEL TIME (Program estimated size) ****
_____________________________________________________________________
Upstream point/station elevation =   113.000(Ft.)
Downstream point/station elevation =   107.000(Ft.)
Pipe length  =   150.00(Ft.)   Manning's N = 0.013
No. of pipes = 1  Required pipe flow  =     2.022(CFS)
Nearest computed pipe diameter  =      9.00(In.)
Calculated individual pipe flow  =     2.022(CFS)
Normal flow depth in pipe =    5.08(In.)
Flow top width inside pipe =    8.92(In.)
Critical Depth =    7.74(In.)
Pipe flow velocity =      7.86(Ft/s)
Travel time through pipe =    0.32 min.
Time of concentration (TC) =     6.31 min.


++++++++++++++++++++++++++++++++++++++++++++++++++++++++++++++++++++++
Process from Point/Station      436.000 to Point/Station      454.000
**** CONFLUENCE OF MINOR STREAMS ****
_____________________________________________________________________
Along Main Stream number: 1 in normal stream number 2
Stream flow area =      0.850(Ac.)
```

```
Runoff from this stream =      2.022(CFS)
Time of concentration =    6.31 min.
Rainfall intensity =     6.573(In/Hr)
Summary of stream data:

Stream   Flow rate      TC            Rainfall Intensity
 No.       (CFS)       (min)                 (In/Hr)


1       59.037     14.88          3.781
2        2.022      6.31          6.573
Qmax(1) =
         1.000 *    1.000 *    59.037) +
         0.575 *    1.000 *     2.022) + =      60.200
Qmax(2) =
         1.000 *    0.424 *    59.037) +
         1.000 *    1.000 *     2.022) + =      27.071

Total of 2 streams to confluence:
Flow rates before confluence point:
      59.037       2.022
Maximum flow rates at confluence using above data:
       60.200       27.071
Area of streams before confluence:
       31.120        0.850
Results of confluence:
Total flow rate =     60.200(CFS)
Time of concentration =    14.882 min.
Effective stream area after confluence =     31.970(Ac.)


++++++++++++++++++++++++++++++++++++++++++++++++++++++++++++++++++++++
Process from Point/Station      454.000 to Point/Station      456.000
**** PIPEFLOW TRAVEL TIME (Program estimated size) ****
______________________________________________________________________
Upstream point/station elevation =   107.000(Ft.)
Downstream point/station elevation =    93.000(Ft.)
Pipe length  =   326.00(Ft.)   Manning's N = 0.013
No. of pipes = 1  Required pipe flow  =    60.200(CFS)
Nearest computed pipe diameter  =     27.00(In.)
Calculated individual pipe flow  =    60.200(CFS)
Normal flow depth in pipe =   20.77(In.)
Flow top width inside pipe =   22.76(In.)
Critical depth could not be calculated.
Pipe flow velocity =     18.35(Ft/s)
Travel time through pipe =    0.30 min.
Time of concentration (TC) =    15.18 min.


++++++++++++++++++++++++++++++++++++++++++++++++++++++++++++++++++++++
Process from Point/Station      454.000 to Point/Station      456.000
**** CONFLUENCE OF MAIN STREAMS ****
______________________________________________________________________
The following data inside Main Stream is listed:
In Main Stream number: 1
Stream flow area =     31.970(Ac.)
Runoff from this stream =     60.200(CFS)
Time of concentration =   15.18 min.
Rainfall intensity =     3.733(In/Hr)
Program is now starting with Main Stream No. 2
```

```
++++++++++++++++++++++++++++++++++++++++++++++++++++++++++++++++++++++
Process from Point/Station      430.000 to Point/Station      431.000
**** INITIAL AREA EVALUATION ****
______________________________________________________________________
Decimal fraction soil group A = 0.000
Decimal fraction soil group B = 0.000
Decimal fraction soil group C = 0.000
Decimal fraction soil group D = 1.000
[HIGH DENSITY RESIDENTIAL                    ]
(43.0 DU/A or Less       )
Impervious value, Ai = 0.800
Sub-Area C Value = 0.790
Initial subarea total flow distance  =  100.000(Ft.)
Highest elevation =  123.000(Ft.)
Lowest elevation =  122.000(Ft.)
Elevation difference =    1.000(Ft.) Slope =  1.000 %
INITIAL AREA TIME OF CONCENTRATION CALCULATIONS:
The maximum overland flow distance is 65.00 (Ft)
for the top area slope value of   1.00 %, in a development type of
 43.0 DU/A or Less
In Accordance With Figure 3-3
Initial Area Time of Concentration =   4.50 minutes
TC = [1.8*(1.1-C)*distance(Ft.)^.5)/(% slope^(1/3)]
TC = [1.8*(1.1-0.7900)*(  65.000^.5)/(   1.000^(1/3)]=   4.50
The initial area total distance of  100.00 (Ft.) entered leaves a
remaining distance of   35.00 (Ft.)
Using Figure 3-4, the travel time for this distance is   0.71 minutes
for a distance of  35.00 (Ft.) and a slope of  1.00 %
with an elevation difference of   0.35(Ft.) from the end of the top area
Tt = [11.9*length(Mi)^3)/(elevation change(Ft.))]^.385 *60(min/hr)
 =    0.710 Minutes
Tt=[(11.9*0.0066^3)/(  0.35)]^.385=  0.71
Total initial area Ti =   4.50 minutes from Figure 3-3 formula plus
  0.71 minutes from the Figure 3-4 formula =   5.21 minutes
Rainfall intensity (I) =      7.441(In/Hr) for a   100.0 year storm
Effective runoff coefficient used for area (Q=KCIA) is C = 0.790
Subarea runoff =      1.881(CFS)
Total initial stream area =        0.320(Ac.)


++++++++++++++++++++++++++++++++++++++++++++++++++++++++++++++++++++++
Process from Point/Station      431.000 to Point/Station      432.000
**** IMPROVED CHANNEL TRAVEL TIME ****
______________________________________________________________________
Upstream point elevation =   122.000(Ft.)
Downstream point elevation =   115.300(Ft.)
Channel length thru subarea  =   875.000(Ft.)
Channel base width =    5.000(Ft.)
Slope or 'Z' of left channel bank =   5.000
Slope or 'Z' of right channel bank =   5.000
Estimated mean flow rate at midpoint of channel =     13.342(CFS)
Manning's 'N'    = 0.018
Maximum depth of channel  =    2.000(Ft.)
Flow(q) thru subarea =     13.342(CFS)
Depth of flow =   0.487(Ft.), Average velocity =   3.680(Ft/s)
Channel flow top width =    9.875(Ft.)
Flow Velocity =    3.68(Ft/s)
Travel time  =    3.96 min.
```

```
Time of concentration =    9.17 min.
Critical depth =      0.508(Ft.)
 Adding area flow to channel
Decimal fraction soil group A = 0.000
Decimal fraction soil group B = 0.000
Decimal fraction soil group C = 0.000
Decimal fraction soil group D = 1.000
[HIGH DENSITY RESIDENTIAL                    ]
(43.0 DU/A or Less      )
Impervious value, Ai = 0.800
Sub-Area C Value = 0.790
Rainfall intensity =      5.166(In/Hr) for a   100.0 year storm
Effective runoff coefficient used for total area
(Q=KCIA) is C = 0.790  CA =      4.787
Subarea runoff =     22.852(CFS) for      5.740(Ac.)
Total runoff =     24.733(CFS)  Total area =       6.060(Ac.)
Depth of flow =   0.673(Ft.), Average velocity =   4.395(Ft/s)
Critical depth =      0.719(Ft.)


++++++++++++++++++++++++++++++++++++++++++++++++++++++++++++++++++++++
Process from Point/Station      429.000 to Point/Station      432.000
**** SUBAREA FLOW ADDITION ****
______________________________________________________________________
Decimal fraction soil group A = 0.000
Decimal fraction soil group B = 0.000
Decimal fraction soil group C = 0.000
Decimal fraction soil group D = 1.000
[UNDISTURBED NATURAL TERRAIN                 ]
(Permanent Open Space   )
Impervious value, Ai = 0.000
Sub-Area C Value = 0.350
Time of concentration =     9.17 min.
Rainfall intensity =      5.166(In/Hr) for a   100.0 year storm
Effective runoff coefficient used for total area
(Q=KCIA) is C = 0.743  CA =      5.043
Subarea runoff =      1.320(CFS) for      0.730(Ac.)
Total runoff =     26.053(CFS)  Total area =       6.790(Ac.)


++++++++++++++++++++++++++++++++++++++++++++++++++++++++++++++++++++++
Process from Point/Station      432.000 to Point/Station      457.000
**** PIPEFLOW TRAVEL TIME (Program estimated size) ****
______________________________________________________________________
Upstream point/station elevation =   101.000(Ft.)
Downstream point/station elevation =   100.000(Ft.)
Pipe length  =   140.00(Ft.)   Manning's N = 0.013
No. of pipes = 1  Required pipe flow  =    26.053(CFS)
Nearest computed pipe diameter  =     27.00(In.)
Calculated individual pipe flow  =    26.053(CFS)
Normal flow depth in pipe =   22.03(In.)
Flow top width inside pipe =   20.93(In.)
Critical Depth =   21.37(In.)
Pipe flow velocity =      7.50(Ft/s)
Travel time through pipe =    0.31 min.
Time of concentration (TC) =     9.48 min.


++++++++++++++++++++++++++++++++++++++++++++++++++++++++++++++++++++++
Process from Point/Station      457.000 to Point/Station      456.000
```

```
**** SUBAREA FLOW ADDITION ****
_____________________________________________________________________
Decimal fraction soil group A = 0.000
Decimal fraction soil group B = 0.000
Decimal fraction soil group C = 0.000
Decimal fraction soil group D = 1.000
[UNDISTURBED NATURAL TERRAIN                    ]
(Permanent Open Space   )
Impervious value, Ai = 0.000
Sub-Area C Value = 0.350
Time of concentration =     9.48 min.
Rainfall intensity =      5.056(In/Hr) for a   100.0 year storm
Effective runoff coefficient used for total area
(Q=KCIA) is C = 0.717  CA =      5.207
Subarea runoff =      0.278(CFS) for      0.470(Ac.)
Total runoff =     26.331(CFS)  Total area =       7.260(Ac.)


++++++++++++++++++++++++++++++++++++++++++++++++++++++++++++++++++++++++
Process from Point/Station      432.000 to Point/Station      456.000
**** CONFLUENCE OF MAIN STREAMS ****
_____________________________________________________________________
The following data inside Main Stream is listed:
In Main Stream number: 2
Stream flow area =      7.260(Ac.)
Runoff from this stream =     26.331(CFS)
Time of concentration =    9.48 min.
Rainfall intensity =     5.056(In/Hr)
Summary of stream data:

Stream   Flow rate      TC            Rainfall Intensity
 No.       (CFS)       (min)                 (In/Hr)


1       60.200     15.18          3.733
2       26.331      9.48          5.056
Qmax(1) =
         1.000 *    1.000 *    60.200) +
         0.738 *    1.000 *    26.331) + =      79.641
Qmax(2) =
         1.000 *    0.625 *    60.200) +
         1.000 *    1.000 *    26.331) + =      63.943

Total of 2 main streams to confluence:
Flow rates before confluence point:
      60.200      26.331
Maximum flow rates at confluence using above data:
       79.641       63.943
Area of streams before confluence:
       31.970        7.260


Results of confluence:
Total flow rate =     79.641(CFS)
Time of concentration =    15.178 min.
Effective stream area after confluence  =     39.230(Ac.)
End of computations, total study area =          39.230 (Ac.)
```

```
                San Diego County Rational Hydrology Program

CIVILCADD/CIVILDESIGN Engineering Software,(c)1991-2004 Version 7.4

Rational method hydrology  program based on
San Diego County Flood Control Division 2003 hydrology manual
      Rational Hydrology Study        Date: 10/02/12
----------------------------------------------------------------------
2468 QUARRY CREEK
PROPOSED CONDITIONS
SYSTEM 500
FILE: S500P100
----------------------------------------------------------------------
 *********   Hydrology Study Control Information **********

----------------------------------------------------------------------


Program License Serial Number 4049

----------------------------------------------------------------------
Rational hydrology study storm event year is   100.0
English (in-lb) input data Units used

Map data precipitation entered:
6 hour,  precipitation(inches) =  2.900
24 hour precipitation(inches) =  5.100
P6/P24 =    56.9%
San Diego hydrology manual 'C' values used


++++++++++++++++++++++++++++++++++++++++++++++++++++++++++++++++++++++
Process from Point/Station      500.000 to Point/Station      510.000
**** INITIAL AREA EVALUATION ****
______________________________________________________________________
Decimal fraction soil group A = 0.000
Decimal fraction soil group B = 0.000
Decimal fraction soil group C = 0.000
Decimal fraction soil group D = 1.000
[HIGH DENSITY RESIDENTIAL                    ]
(43.0 DU/A or Less      )
Impervious value, Ai = 0.800
Sub-Area C Value = 0.790
Initial subarea total flow distance  =   60.000(Ft.)
Highest elevation =  124.000(Ft.)
Lowest elevation =  123.400(Ft.)
Elevation difference =    0.600(Ft.) Slope =  1.000 %
INITIAL AREA TIME OF CONCENTRATION CALCULATIONS:
The maximum overland flow distance is 65.00 (Ft)
for the top area slope value of   1.00 %, in a development type of
 43.0 DU/A or Less
In Accordance With Figure 3-3
Initial Area Time of Concentration =   4.50 minutes
TC = [1.8*(1.1-C)*distance(Ft.)^.5)/(% slope^(1/3)]
TC = [1.8*(1.1-0.7900)*(  65.000^.5)/(   1.000^(1/3)]=   4.50
Calculated TC of    4.499 minutes is less than 5 minutes,
 resetting TC to 5.0 minutes for rainfall intensity calculations
Rainfall intensity (I) =      7.641(In/Hr) for a   100.0 year storm
Effective runoff coefficient used for area (Q=KCIA) is C = 0.790
```

```
Subarea runoff =      8.451(CFS)
Total initial stream area =        1.400(Ac.)


++++++++++++++++++++++++++++++++++++++++++++++++++++++++++++++++++++++
Process from Point/Station      510.000 to Point/Station      530.000
**** IMPROVED CHANNEL TRAVEL TIME ****
______________________________________________________________________
Upstream point elevation =   123.400(Ft.)
Downstream point elevation =   121.400(Ft.)
Channel length thru subarea  =   211.000(Ft.)
Channel base width =    5.000(Ft.)
Slope or 'Z' of left channel bank =   3.000
Slope or 'Z' of right channel bank =   3.000
Estimated mean flow rate at midpoint of channel =     21.661(CFS)
Manning's 'N'    = 0.018
Maximum depth of channel  =    1.000(Ft.)
Flow(q) thru subarea =     21.661(CFS)
Depth of flow =   0.633(Ft.), Average velocity =   4.961(Ft/s)
Channel flow top width =    8.797(Ft.)
Flow Velocity =    4.96(Ft/s)
Travel time  =    0.71 min.
Time of concentration =    5.21 min.
Critical depth =      0.719(Ft.)
 Adding area flow to channel
Decimal fraction soil group A = 0.000
Decimal fraction soil group B = 0.000
Decimal fraction soil group C = 0.000
Decimal fraction soil group D = 1.000
[HIGH DENSITY RESIDENTIAL                    ]
(43.0 DU/A or Less      )
Impervious value, Ai = 0.800
Sub-Area C Value = 0.790
Rainfall intensity =      7.443(In/Hr) for a   100.0 year storm
Effective runoff coefficient used for total area
(Q=KCIA) is C = 0.790  CA =      4.677
Subarea runoff =     26.358(CFS) for      4.520(Ac.)
Total runoff =     34.809(CFS)  Total area =       5.920(Ac.)
Depth of flow =   0.818(Ft.), Average velocity =   5.712(Ft/s)
Critical depth =      0.938(Ft.)


++++++++++++++++++++++++++++++++++++++++++++++++++++++++++++++++++++++
Process from Point/Station      530.000 to Point/Station      547.000
**** PIPEFLOW TRAVEL TIME (Program estimated size) ****
______________________________________________________________________
Upstream point/station elevation =   116.000(Ft.)
Downstream point/station elevation =   115.000(Ft.)
Pipe length  =   100.00(Ft.)   Manning's N = 0.013
No. of pipes = 1  Required pipe flow  =    34.809(CFS)
Nearest computed pipe diameter  =     30.00(In.)
Calculated individual pipe flow  =    34.809(CFS)
Normal flow depth in pipe =   21.23(In.)
Flow top width inside pipe =   27.29(In.)
Critical Depth =   24.05(In.)
Pipe flow velocity =      9.38(Ft/s)
Travel time through pipe =    0.18 min.
Time of concentration (TC) =     5.39 min.
```

```
++++++++++++++++++++++++++++++++++++++++++++++++++++++++++++++++++++++
Process from Point/Station      547.000 to Point/Station      547.000
**** SUBAREA FLOW ADDITION ****
______________________________________________________________________
Decimal fraction soil group A = 0.000
Decimal fraction soil group B = 0.000
Decimal fraction soil group C = 0.000
Decimal fraction soil group D = 1.000
[HIGH DENSITY RESIDENTIAL                    ]
(43.0 DU/A or Less      )
Impervious value, Ai = 0.800
Sub-Area C Value = 0.790
Time of concentration =     5.39 min.
Rainfall intensity =      7.284(In/Hr) for a   100.0 year storm
Effective runoff coefficient used for total area
(Q=KCIA) is C = 0.790  CA =      5.072
Subarea runoff =      2.132(CFS) for      0.500(Ac.)
Total runoff =     36.941(CFS)  Total area =       6.420(Ac.)


++++++++++++++++++++++++++++++++++++++++++++++++++++++++++++++++++++++
Process from Point/Station      547.000 to Point/Station      550.000
**** PIPEFLOW TRAVEL TIME (Program estimated size) ****
______________________________________________________________________
Upstream point/station elevation =   109.000(Ft.)
Downstream point/station elevation =    82.000(Ft.)
Pipe length  =   118.00(Ft.)   Manning's N = 0.013
No. of pipes = 1  Required pipe flow  =    36.941(CFS)
Nearest computed pipe diameter  =     18.00(In.)
Calculated individual pipe flow  =    36.941(CFS)
Normal flow depth in pipe =   11.47(In.)
Flow top width inside pipe =   17.31(In.)
Critical depth could not be calculated.
Pipe flow velocity =     31.08(Ft/s)
Travel time through pipe =    0.06 min.
Time of concentration (TC) =     5.45 min.


++++++++++++++++++++++++++++++++++++++++++++++++++++++++++++++++++++++
Process from Point/Station      547.000 to Point/Station      550.000
**** CONFLUENCE OF MINOR STREAMS ****
______________________________________________________________________
Along Main Stream number: 1 in normal stream number 1
Stream flow area =      6.420(Ac.)
Runoff from this stream =     36.941(CFS)
Time of concentration =    5.45 min.
Rainfall intensity =     7.229(In/Hr)


++++++++++++++++++++++++++++++++++++++++++++++++++++++++++++++++++++++
Process from Point/Station      531.000 to Point/Station      533.000
**** INITIAL AREA EVALUATION ****
______________________________________________________________________
Decimal fraction soil group A = 0.000
Decimal fraction soil group B = 0.000
Decimal fraction soil group C = 0.000
Decimal fraction soil group D = 1.000
[HIGH DENSITY RESIDENTIAL                    ]
(43.0 DU/A or Less      )
Impervious value, Ai = 0.800
```

```
Sub-Area C Value = 0.790
Initial subarea total flow distance  =   74.000(Ft.)
Highest elevation =  122.000(Ft.)
Lowest elevation =  121.300(Ft.)
Elevation difference =    0.700(Ft.) Slope =  0.946 %
INITIAL AREA TIME OF CONCENTRATION CALCULATIONS:
The maximum overland flow distance is 65.00 (Ft)
for the top area slope value of   0.94 %, in a development type of
 43.0 DU/A or Less
In Accordance With Figure 3-3
Initial Area Time of Concentration =   4.58 minutes
TC = [1.8*(1.1-C)*distance(Ft.)^.5)/(% slope^(1/3)]
TC = [1.8*(1.1-0.7900)*(  65.000^.5)/(   0.945^(1/3)]=   4.58
The initial area total distance of   74.00 (Ft.) entered leaves a
remaining distance of    9.00 (Ft.)
Using Figure 3-4, the travel time for this distance is   0.26 minutes
for a distance of   9.00 (Ft.) and a slope of  0.94 %
with an elevation difference of   0.09(Ft.) from the end of the top area
Tt = [11.9*length(Mi)^3)/(elevation change(Ft.))]^.385 *60(min/hr)
 =    0.255 Minutes
Tt=[(11.9*0.0017^3)/(  0.09)]^.385=  0.26
Total initial area Ti =   4.58 minutes from Figure 3-3 formula plus
  0.26 minutes from the Figure 3-4 formula =   4.84 minutes
Calculated TC of    4.840 minutes is less than 5 minutes,
 resetting TC to 5.0 minutes for rainfall intensity calculations
Rainfall intensity (I) =      7.641(In/Hr) for a   100.0 year storm
Effective runoff coefficient used for area (Q=KCIA) is C = 0.790
Subarea runoff =      0.966(CFS)
Total initial stream area =        0.160(Ac.)


++++++++++++++++++++++++++++++++++++++++++++++++++++++++++++++++++++++
Process from Point/Station      533.000 to Point/Station      532.000
**** IMPROVED CHANNEL TRAVEL TIME ****
______________________________________________________________________
Upstream point elevation =   121.300(Ft.)
Downstream point elevation =   114.000(Ft.)
Channel length thru subarea  =   932.000(Ft.)
Channel base width =    5.000(Ft.)
Slope or 'Z' of left channel bank =   3.000
Slope or 'Z' of right channel bank =   3.000
Estimated mean flow rate at midpoint of channel =     11.405(CFS)
Manning's 'N'    = 0.018
Maximum depth of channel  =    2.000(Ft.)
Flow(q) thru subarea =     11.405(CFS)
Depth of flow =   0.468(Ft.), Average velocity =   3.808(Ft/s)
Channel flow top width =    7.806(Ft.)
Flow Velocity =    3.81(Ft/s)
Travel time  =    4.08 min.
Time of concentration =    8.92 min.
Critical depth =      0.492(Ft.)
 Adding area flow to channel
Decimal fraction soil group A = 0.000
Decimal fraction soil group B = 0.000
Decimal fraction soil group C = 0.000
Decimal fraction soil group D = 1.000
[HIGH DENSITY RESIDENTIAL                    ]
(43.0 DU/A or Less      )
Impervious value, Ai = 0.800
Sub-Area C Value = 0.790
```

```
Rainfall intensity =      5.261(In/Hr) for a   100.0 year storm
Effective runoff coefficient used for total area
(Q=KCIA) is C = 0.790  CA =      4.140
Subarea runoff =     20.811(CFS) for      5.080(Ac.)
Total runoff =     21.777(CFS)  Total area =       5.240(Ac.)
Depth of flow =   0.669(Ft.), Average velocity =   4.649(Ft/s)
Critical depth =      0.719(Ft.)


++++++++++++++++++++++++++++++++++++++++++++++++++++++++++++++++++++++
Process from Point/Station      532.000 to Point/Station      532.000
**** SUBAREA FLOW ADDITION ****
______________________________________________________________________
Decimal fraction soil group A = 0.000
Decimal fraction soil group B = 0.000
Decimal fraction soil group C = 0.000
Decimal fraction soil group D = 1.000
[LOW DENSITY RESIDENTIAL                    ]
(1.0 DU/A or Less       )
Impervious value, Ai = 0.100
Sub-Area C Value = 0.410
Time of concentration =     8.92 min.
Rainfall intensity =      5.261(In/Hr) for a   100.0 year storm
Effective runoff coefficient used for total area
(Q=KCIA) is C = 0.735  CA =      4.505
Subarea runoff =      1.920(CFS) for      0.890(Ac.)
Total runoff =     23.697(CFS)  Total area =       6.130(Ac.)


++++++++++++++++++++++++++++++++++++++++++++++++++++++++++++++++++++++
Process from Point/Station      532.000 to Point/Station      570.000
**** PIPEFLOW TRAVEL TIME (Program estimated size) ****
______________________________________________________________________
Upstream point/station elevation =   105.000(Ft.)
Downstream point/station elevation =    74.500(Ft.)
Pipe length  =   148.00(Ft.)   Manning's N = 0.013
No. of pipes = 1  Required pipe flow  =    23.697(CFS)
Nearest computed pipe diameter  =     15.00(In.)
Calculated individual pipe flow  =    23.697(CFS)
Normal flow depth in pipe =   10.22(In.)
Flow top width inside pipe =   13.98(In.)
Critical depth could not be calculated.
Pipe flow velocity =     26.59(Ft/s)
Travel time through pipe =    0.09 min.
Time of concentration (TC) =     9.01 min.


++++++++++++++++++++++++++++++++++++++++++++++++++++++++++++++++++++++
Process from Point/Station      570.000 to Point/Station      550.000
**** CONFLUENCE OF MINOR STREAMS ****
______________________________________________________________________
Along Main Stream number: 1 in normal stream number 2
Stream flow area =      6.130(Ac.)
Runoff from this stream =     23.697(CFS)
Time of concentration =    9.01 min.
Rainfall intensity =     5.226(In/Hr)


++++++++++++++++++++++++++++++++++++++++++++++++++++++++++++++++++++++
Process from Point/Station      548.000 to Point/Station      549.000
```

```
**** INITIAL AREA EVALUATION ****
______________________________________________________________________
Decimal fraction soil group A = 0.000
Decimal fraction soil group B = 0.000
Decimal fraction soil group C = 0.000
Decimal fraction soil group D = 1.000
[UNDISTURBED NATURAL TERRAIN                    ]
(Permanent Open Space   )
Impervious value, Ai = 0.000
Sub-Area C Value = 0.350
Initial subarea total flow distance  =  188.000(Ft.)
Highest elevation =  168.000(Ft.)
Lowest elevation =  136.000(Ft.)
Elevation difference =   32.000(Ft.) Slope = 17.021 %
INITIAL AREA TIME OF CONCENTRATION CALCULATIONS:
The maximum overland flow distance is 100.00 (Ft)
for the top area slope value of  17.02 %, in a development type of
 Permanent Open Space
In Accordance With Figure 3-3
Initial Area Time of Concentration =   5.25 minutes
TC = [1.8*(1.1-C)*distance(Ft.)^.5)/(% slope^(1/3)]
TC = [1.8*(1.1-0.3500)*( 100.000^.5)/(  17.020^(1/3)]=   5.25
The initial area total distance of  188.00 (Ft.) entered leaves a
remaining distance of   88.00 (Ft.)
Using Figure 3-4, the travel time for this distance is   0.49 minutes
for a distance of  88.00 (Ft.) and a slope of 17.02 %
with an elevation difference of  14.98(Ft.) from the end of the top area
Tt = [11.9*length(Mi)^3)/(elevation change(Ft.))]^.385 *60(min/hr)
 =    0.485 Minutes
Tt=[(11.9*0.0167^3)/( 14.98)]^.385=  0.49
Total initial area Ti =   5.25 minutes from Figure 3-3 formula plus
  0.49 minutes from the Figure 3-4 formula =   5.73 minutes
Rainfall intensity (I) =      6.995(In/Hr) for a   100.0 year storm
Effective runoff coefficient used for area (Q=KCIA) is C = 0.350
Subarea runoff =      2.301(CFS)
Total initial stream area =        0.940(Ac.)


++++++++++++++++++++++++++++++++++++++++++++++++++++++++++++++++++++++
Process from Point/Station      549.000 to Point/Station      550.000
**** CONFLUENCE OF MINOR STREAMS ****
______________________________________________________________________
Along Main Stream number: 1 in normal stream number 3
Stream flow area =      0.940(Ac.)
Runoff from this stream =      2.301(CFS)
Time of concentration =    5.73 min.
Rainfall intensity =     6.995(In/Hr)
Summary of stream data:

Stream   Flow rate      TC            Rainfall Intensity
 No.       (CFS)       (min)                 (In/Hr)


1       36.941      5.45          7.229
2       23.697      9.01          5.226
3        2.301      5.73          6.995
Qmax(1) =
         1.000 *    1.000 *    36.941) +
         1.000 *    0.605 *    23.697) +
         1.000 *    0.950 *     2.301) + =      53.456
```

```
Qmax(2) =
         0.723 *    1.000 *    36.941) +
         1.000 *    1.000 *    23.697) +
         0.747 *    1.000 *     2.301) + =      52.120
Qmax(3) =
         0.968 *    1.000 *    36.941) +
         1.000 *    0.636 *    23.697) +
         1.000 *    1.000 *     2.301) + =      53.125

Total of 3 streams to confluence:
Flow rates before confluence point:
      36.941      23.697       2.301
Maximum flow rates at confluence using above data:
       53.456       52.120       53.125
Area of streams before confluence:
        6.420        6.130        0.940
Results of confluence:
Total flow rate =     53.456(CFS)
Time of concentration =     5.449 min.
Effective stream area after confluence =     13.490(Ac.)
End of computations, total study area =          13.490 (Ac.)
```

```
            San Diego County Rational Hydrology Program

CIVILCADD/CIVILDESIGN Engineering Software,(c)1991-2004 Version 7.4

Rational method hydrology  program based on
San Diego County Flood Control Division 2003 hydrology manual
      Rational Hydrology Study        Date: 09/27/11
----------------------------------------------------------------------
2468 QUARRY CREEK
PROPOSED CONDITIONS
SYSTEM 600
FILE: S600P100
----------------------------------------------------------------------
 *********   Hydrology Study Control Information **********

----------------------------------------------------------------------


Program License Serial Number 4049

----------------------------------------------------------------------
Rational hydrology study storm event year is   100.0
English (in-lb) input data Units used

Map data precipitation entered:
6 hour,  precipitation(inches) =  2.900
24 hour precipitation(inches) =  5.100
P6/P24 =    56.9%
San Diego hydrology manual 'C' values used


++++++++++++++++++++++++++++++++++++++++++++++++++++++++++++++++++++++
Process from Point/Station      600.000 to Point/Station      601.000
**** INITIAL AREA EVALUATION ****
______________________________________________________________________
Decimal fraction soil group A = 0.000
Decimal fraction soil group B = 0.000
Decimal fraction soil group C = 0.000
Decimal fraction soil group D = 1.000
[INDUSTRIAL area type                        ]
(General Industrial       )
Impervious value, Ai = 0.950
Sub-Area C Value = 0.870
Initial subarea total flow distance  =  100.000(Ft.)
Highest elevation =  451.000(Ft.)
Lowest elevation =  446.000(Ft.)
Elevation difference =    5.000(Ft.) Slope =  5.000 %
INITIAL AREA TIME OF CONCENTRATION CALCULATIONS:
The maximum overland flow distance is 90.00 (Ft)
for the top area slope value of   5.00 %, in a development type of
 General Industrial
In Accordance With Table 3-2
Initial Area Time of Concentration =   2.30 minutes
 (for slope value of   5.00 %)
Calculated TC of    2.300 minutes is less than 5 minutes,
 resetting TC to 5.0 minutes for rainfall intensity calculations
```

```
Rainfall intensity (I) =      7.641(In/Hr) for a   100.0 year storm
Effective runoff coefficient used for area (Q=KCIA) is C = 0.870
Subarea runoff =      2.792(CFS)
Total initial stream area =        0.420(Ac.)


++++++++++++++++++++++++++++++++++++++++++++++++++++++++++++++++++++++
Process from Point/Station      601.000 to Point/Station      602.000
**** STREET FLOW TRAVEL TIME + SUBAREA FLOW ADDITION ****
______________________________________________________________________
Top of street segment elevation =   446.000(Ft.)
End of street segment elevation =   411.000(Ft.)
Length of street segment  =   625.000(Ft.)
Height of curb above gutter flowline  =    6.0(In.)
Width of half street (curb to crown)  =  22.000(Ft.)
Distance from crown to crossfall grade break  =  18.000(Ft.)
Slope from gutter to grade break (v/hz) =   0.020
Slope from grade break to crown (v/hz)  =   0.020
Street flow is on [1] side(s) of the street
Distance from curb to property line  =  10.000(Ft.)
Slope from curb to property line (v/hz) =   0.020
Gutter width =   1.500(Ft.)
Gutter hike from flowline =  1.500(In.)
 Manning's N in gutter =  0.0150
 Manning's N from gutter to grade break =  0.0180
 Manning's N from grade break to crown =  0.0180
Estimated mean flow rate at midpoint of street =     12.129(CFS)
Depth of flow =   0.386(Ft.), Average velocity =   5.537(Ft/s)
Streetflow hydraulics at midpoint of street travel:
Halfstreet flow width =  14.557(Ft.)
Flow velocity =   5.54(Ft/s)
Travel time =    1.88 min.     TC =    4.18  min.
 Adding area flow to street
Decimal fraction soil group A = 0.000
Decimal fraction soil group B = 0.000
Decimal fraction soil group C = 0.000
Decimal fraction soil group D = 1.000
[MEDIUM DENSITY RESIDENTIAL                  ]
(7.3 DU/A or Less       )
Impervious value, Ai = 0.400
Sub-Area C Value = 0.570
Rainfall intensity =      7.641(In/Hr) for a   100.0 year storm
Effective runoff coefficient used for total area
(Q=KCIA) is C = 0.597  CA =      2.799
Subarea runoff =     18.597(CFS) for      4.270(Ac.)
Total runoff =     21.389(CFS)      Total area =       4.690(Ac.)
Street flow at end of street =     21.389(CFS)
Half street flow at end of street =     21.389(CFS)
Depth of flow =   0.458(Ft.), Average velocity =   6.351(Ft/s)
Flow width (from curb towards crown)=  18.157(Ft.)


++++++++++++++++++++++++++++++++++++++++++++++++++++++++++++++++++++++
Process from Point/Station      602.000 to Point/Station      603.000
**** PIPEFLOW TRAVEL TIME (Program estimated size) ****
______________________________________________________________________
Upstream point/station elevation =   411.000(Ft.)
```

```
Downstream point/station elevation =   350.000(Ft.)
Pipe length  =   760.00(Ft.)   Manning's N = 0.013
No. of pipes = 1  Required pipe flow  =    21.389(CFS)
Nearest computed pipe diameter  =     18.00(In.)
Calculated individual pipe flow  =    21.389(CFS)
Normal flow depth in pipe =   11.30(In.)
Flow top width inside pipe =   17.40(In.)
Critical depth could not be calculated.
Pipe flow velocity =     18.32(Ft/s)
Travel time through pipe =    0.69 min.
Time of concentration (TC) =     4.87 min.


++++++++++++++++++++++++++++++++++++++++++++++++++++++++++++++++++++++
Process from Point/Station      602.000 to Point/Station      603.000
**** SUBAREA FLOW ADDITION ****
______________________________________________________________________
Decimal fraction soil group A = 0.000
Decimal fraction soil group B = 0.000
Decimal fraction soil group C = 0.000
Decimal fraction soil group D = 1.000
[MEDIUM DENSITY RESIDENTIAL                  ]
(7.3 DU/A or Less       )
Impervious value, Ai = 0.400
Sub-Area C Value = 0.570
Time of concentration =     4.87 min.
Rainfall intensity =      7.641(In/Hr) for a   100.0 year storm
Effective runoff coefficient used for total area
(Q=KCIA) is C = 0.591  CA =      3.563
Subarea runoff =      5.836(CFS) for      1.340(Ac.)
Total runoff =     27.225(CFS)      Total area =       6.030(Ac.)


++++++++++++++++++++++++++++++++++++++++++++++++++++++++++++++++++++++
Process from Point/Station      602.000 to Point/Station      603.000
**** CONFLUENCE OF MAIN STREAMS ****
______________________________________________________________________
The following data inside Main Stream is listed:
In Main Stream number: 1
Stream flow area =      6.030(Ac.)
Runoff from this stream =     27.225(CFS)
Time of concentration =    4.87 min.
Rainfall intensity =     7.641(In/Hr)
Program is now starting with Main Stream No. 2


++++++++++++++++++++++++++++++++++++++++++++++++++++++++++++++++++++++
Process from Point/Station      604.000 to Point/Station      605.000
**** INITIAL AREA EVALUATION ****
______________________________________________________________________
Decimal fraction soil group A = 0.000
Decimal fraction soil group B = 0.000
Decimal fraction soil group C = 0.000
Decimal fraction soil group D = 1.000
[UNDISTURBED NATURAL TERRAIN                 ]
(Permanent Open Space   )
Impervious value, Ai = 0.000
```

```
Sub-Area C Value = 0.350
Initial subarea total flow distance  =  100.000(Ft.)
Highest elevation =  420.000(Ft.)
Lowest elevation =  400.000(Ft.)
Elevation difference =   20.000(Ft.) Slope = 20.000 %
INITIAL AREA TIME OF CONCENTRATION CALCULATIONS:
The maximum overland flow distance is 100.00 (Ft)
for the top area slope value of  20.00 %, in a development type of
 Permanent Open Space
In Accordance With Table 3-2
Initial Area Time of Concentration =   6.90 minutes
 (for slope value of  10.00 %)
Rainfall intensity (I) =      6.207(In/Hr) for a   100.0 year storm
Effective runoff coefficient used for area (Q=KCIA) is C = 0.350
Subarea runoff =      0.435(CFS)
Total initial stream area =        0.200(Ac.)


++++++++++++++++++++++++++++++++++++++++++++++++++++++++++++++++++++++
Process from Point/Station      605.000 to Point/Station      606.000
**** IMPROVED CHANNEL TRAVEL TIME ****
______________________________________________________________________
Upstream point elevation =   400.000(Ft.)
Downstream point elevation =   364.000(Ft.)
Channel length thru subarea  =   320.000(Ft.)
Channel base width      =    3.000(Ft.)
Slope or 'Z' of left channel bank =   3.000
Slope or 'Z' of right channel bank =   3.000
Estimated mean flow rate at midpoint of channel =      3.161(CFS)
Manning's 'N'    = 0.050
Maximum depth of channel  =    1.000(Ft.)
Flow(q) thru subarea =      3.161(CFS)
Depth of flow =   0.246(Ft.), Average velocity =   3.433(Ft/s)
Channel flow top width =    4.478(Ft.)
Flow Velocity =    3.43(Ft/s)
Travel time  =    1.55 min.
Time of concentration =    8.45 min.
Critical depth =      0.293(Ft.)
 Adding area flow to channel
Decimal fraction soil group A = 0.000
Decimal fraction soil group B = 0.000
Decimal fraction soil group C = 0.000
Decimal fraction soil group D = 1.000
[UNDISTURBED NATURAL TERRAIN                  ]
(Permanent Open Space   )
Impervious value, Ai = 0.000
Sub-Area C Value = 0.350
Rainfall intensity =      5.445(In/Hr) for a   100.0 year storm
Effective runoff coefficient used for total area
(Q=KCIA) is C = 0.350  CA =      1.071
Subarea runoff =      5.397(CFS) for      2.860(Ac.)
Total runoff =      5.832(CFS)      Total area =       3.060(Ac.)
Depth of flow =   0.347(Ft.), Average velocity =   4.162(Ft/s)
Critical depth =      0.422(Ft.)


++++++++++++++++++++++++++++++++++++++++++++++++++++++++++++++++++++++
```

```
Process from Point/Station      606.000 to Point/Station      607.000
**** STREET FLOW TRAVEL TIME + SUBAREA FLOW ADDITION ****
------------------------------------------------------------------------
Top of street segment elevation =   357.000(Ft.)
End of street segment elevation =   345.000(Ft.)
Length of street segment  =   550.000(Ft.)
Height of curb above gutter flowline  =    6.0(In.)
Width of half street (curb to crown)  =  22.000(Ft.)
Distance from crown to crossfall grade break  =  18.000(Ft.)
Slope from gutter to grade break (v/hz) =   0.020
Slope from grade break to crown (v/hz)  =   0.020
Street flow is on [1] side(s) of the street
Distance from curb to property line  =  10.000(Ft.)
Slope from curb to property line (v/hz) =   0.020
Gutter width =   1.500(Ft.)
Gutter hike from flowline =  1.500(In.)
 Manning's N in gutter =  0.0150
 Manning's N from gutter to grade break =  0.0180
 Manning's N from grade break to crown =  0.0180
Estimated mean flow rate at midpoint of street =      7.812(CFS)
Depth of flow =   0.390(Ft.), Average velocity =   3.482(Ft/s)
Streetflow hydraulics at midpoint of street travel:
Halfstreet flow width =  14.738(Ft.)
Flow velocity =   3.48(Ft/s)
Travel time =    2.63 min.     TC =   11.09  min.
 Adding area flow to street
Decimal fraction soil group A = 0.000
Decimal fraction soil group B = 0.000
Decimal fraction soil group C = 0.000
Decimal fraction soil group D = 1.000
[UNDISTURBED NATURAL TERRAIN                    ]
(Permanent Open Space   )
Impervious value, Ai = 0.000
Sub-Area C Value = 0.350
Rainfall intensity =      4.572(In/Hr) for a   100.0 year storm
Effective runoff coefficient used for total area
(Q=KCIA) is C = 0.350  CA =      2.128
Subarea runoff =      3.897(CFS) for      3.020(Ac.)
Total runoff =      9.729(CFS)      Total area =      6.080(Ac.)
Street flow at end of street =      9.729(CFS)
Half street flow at end of street =      9.729(CFS)
Depth of flow =   0.416(Ft.), Average velocity =   3.671(Ft/s)
Flow width (from curb towards crown)=  16.058(Ft.)


++++++++++++++++++++++++++++++++++++++++++++++++++++++++++++++++++++++
Process from Point/Station      607.000 to Point/Station      608.000
**** PIPEFLOW TRAVEL TIME (Program estimated size) ****
------------------------------------------------------------------------
Upstream point/station elevation =   345.000(Ft.)
Downstream point/station elevation =   344.600(Ft.)
Pipe length  =    40.00(Ft.)   Manning's N = 0.013
No. of pipes = 1  Required pipe flow  =     9.729(CFS)
Nearest computed pipe diameter  =     18.00(In.)
Calculated individual pipe flow  =     9.729(CFS)
Normal flow depth in pipe =   13.69(In.)
Flow top width inside pipe =   15.37(In.)
```

```
Critical Depth =   14.44(In.)
Pipe flow velocity =      6.75(Ft/s)
Travel time through pipe =    0.10 min.
Time of concentration (TC) =    11.18 min.


++++++++++++++++++++++++++++++++++++++++++++++++++++++++++++++++++++++
Process from Point/Station      607.000 to Point/Station      608.000
**** CONFLUENCE OF MINOR STREAMS ****
______________________________________________________________________
Along Main Stream number: 2 in normal stream number 1
Stream flow area =      6.080(Ac.)
Runoff from this stream =      9.729(CFS)
Time of concentration =   11.18 min.
Rainfall intensity =     4.546(In/Hr)


++++++++++++++++++++++++++++++++++++++++++++++++++++++++++++++++++++++
Process from Point/Station      609.000 to Point/Station      610.000
**** INITIAL AREA EVALUATION ****
______________________________________________________________________
Decimal fraction soil group A = 0.000
Decimal fraction soil group B = 0.000
Decimal fraction soil group C = 0.000
Decimal fraction soil group D = 1.000
[MEDIUM DENSITY RESIDENTIAL                    ]
(7.3 DU/A or Less       )
Impervious value, Ai = 0.400
Sub-Area C Value = 0.570
Initial subarea total flow distance  =  100.000(Ft.)
Highest elevation =  362.000(Ft.)
Lowest elevation =  361.000(Ft.)
Elevation difference =    1.000(Ft.) Slope =  1.000 %
INITIAL AREA TIME OF CONCENTRATION CALCULATIONS:
The maximum overland flow distance is 65.00 (Ft)
for the top area slope value of   1.00 %, in a development type of
 7.3 DU/A or Less
In Accordance With Table 3-2
Initial Area Time of Concentration =   8.40 minutes
 (for slope value of   1.00 %)
Rainfall intensity (I) =      5.468(In/Hr) for a   100.0 year storm
Effective runoff coefficient used for area (Q=KCIA) is C = 0.570
Subarea runoff =      0.436(CFS)
Total initial stream area =        0.140(Ac.)


++++++++++++++++++++++++++++++++++++++++++++++++++++++++++++++++++++++
Process from Point/Station      610.000 to Point/Station      608.000
**** STREET FLOW TRAVEL TIME + SUBAREA FLOW ADDITION ****
______________________________________________________________________
Top of street segment elevation =   361.000(Ft.)
End of street segment elevation =   358.000(Ft.)
Length of street segment  =   345.000(Ft.)
Height of curb above gutter flowline  =    6.0(In.)
Width of half street (curb to crown)  =  22.000(Ft.)
Distance from crown to crossfall grade break  =  18.000(Ft.)
Slope from gutter to grade break (v/hz) =   0.020
```

```
Slope from grade break to crown (v/hz)  =   0.020
Street flow is on [1] side(s) of the street
Distance from curb to property line  =  10.000(Ft.)
Slope from curb to property line (v/hz) =   0.020
Gutter width =   1.500(Ft.)
Gutter hike from flowline =  1.500(In.)
 Manning's N in gutter =  0.0150
 Manning's N from gutter to grade break =  0.0180
 Manning's N from grade break to crown =  0.0180
Estimated mean flow rate at midpoint of street =      3.848(CFS)
Depth of flow =   0.362(Ft.), Average velocity =   2.072(Ft/s)
Streetflow hydraulics at midpoint of street travel:
Halfstreet flow width =  13.364(Ft.)
Flow velocity =   2.07(Ft/s)
Travel time =    2.78 min.     TC =   11.18  min.
 Adding area flow to street
Decimal fraction soil group A = 0.000
Decimal fraction soil group B = 0.000
Decimal fraction soil group C = 0.000
Decimal fraction soil group D = 1.000
[MEDIUM DENSITY RESIDENTIAL                  ]
(7.3 DU/A or Less       )
Impervious value, Ai = 0.400
Sub-Area C Value = 0.570
Rainfall intensity =      4.548(In/Hr) for a   100.0 year storm
Effective runoff coefficient used for total area
(Q=KCIA) is C = 0.570  CA =      1.585
Subarea runoff =      6.771(CFS) for      2.640(Ac.)
Total runoff =      7.207(CFS)      Total area =       2.780(Ac.)
Street flow at end of street =      7.207(CFS)
Half street flow at end of street =      7.207(CFS)
Depth of flow =   0.437(Ft.), Average velocity =   2.409(Ft/s)
Flow width (from curb towards crown)=  17.089(Ft.)


++++++++++++++++++++++++++++++++++++++++++++++++++++++++++++++++++++++
Process from Point/Station      610.000 to Point/Station      608.000
**** CONFLUENCE OF MINOR STREAMS ****
______________________________________________________________________
Along Main Stream number: 2 in normal stream number 2
Stream flow area =      2.780(Ac.)
Runoff from this stream =      7.207(CFS)
Time of concentration =   11.18 min.
Rainfall intensity =     4.548(In/Hr)
Summary of stream data:

Stream   Flow rate      TC            Rainfall Intensity
 No.       (CFS)       (min)                 (In/Hr)


1        9.729     11.18                4.546
2        7.207     11.18                4.548
Qmax(1) =
         1.000 *    1.000 *     9.729) +
         0.999 *    1.000 *     7.207) + =      16.932
Qmax(2) =
         1.000 *    0.999 *     9.729) +
```

```
         1.000 *    1.000 *     7.207) + =      16.928

Total of 2 streams to confluence:
Flow rates before confluence point:
       9.729       7.207
Maximum flow rates at confluence using above data:
       16.932       16.928
Area of streams before confluence:
        6.080        2.780
Results of confluence:
Total flow rate =     16.932(CFS)
Time of concentration =    11.185 min.
Effective stream area after confluence =      8.860(Ac.)


++++++++++++++++++++++++++++++++++++++++++++++++++++++++++++++++++++++
Process from Point/Station      608.000 to Point/Station      603.000
**** PIPEFLOW TRAVEL TIME (Program estimated size) ****
______________________________________________________________________
Upstream point/station elevation =   358.000(Ft.)
Downstream point/station elevation =   357.000(Ft.)
Pipe length  =   100.00(Ft.)   Manning's N = 0.013
No. of pipes = 1  Required pipe flow  =    16.932(CFS)
Nearest computed pipe diameter  =     24.00(In.)
Calculated individual pipe flow  =    16.932(CFS)
Normal flow depth in pipe =   15.49(In.)
Flow top width inside pipe =   22.96(In.)
Critical Depth =   17.79(In.)
Pipe flow velocity =      7.90(Ft/s)
Travel time through pipe =    0.21 min.
Time of concentration (TC) =    11.40 min.


++++++++++++++++++++++++++++++++++++++++++++++++++++++++++++++++++++++
Process from Point/Station      608.000 to Point/Station      603.000
**** CONFLUENCE OF MAIN STREAMS ****
______________________________________________________________________
The following data inside Main Stream is listed:
In Main Stream number: 2
Stream flow area =      8.860(Ac.)
Runoff from this stream =     16.932(CFS)
Time of concentration =   11.40 min.
Rainfall intensity =     4.491(In/Hr)
Summary of stream data:

Stream   Flow rate      TC            Rainfall Intensity
 No.       (CFS)       (min)                 (In/Hr)


1       27.225      4.87                7.641
2       16.932     11.40                4.491
Qmax(1) =
         1.000 *    1.000 *    27.225) +
         1.000 *    0.428 *    16.932) + =      34.464
Qmax(2) =
         0.588 *    1.000 *    27.225) +
         1.000 *    1.000 *    16.932) + =      32.935
```

```
Total of 2 main streams to confluence:
Flow rates before confluence point:
      27.225      16.932
Maximum flow rates at confluence using above data:
       34.464       32.935
Area of streams before confluence:
        6.030        8.860


Results of confluence:
Total flow rate =     34.464(CFS)
Time of concentration =     4.873 min.
Effective stream area after confluence  =     14.890(Ac.)


++++++++++++++++++++++++++++++++++++++++++++++++++++++++++++++++++++++
Process from Point/Station      603.000 to Point/Station      611.000
**** PIPEFLOW TRAVEL TIME (Program estimated size) ****
______________________________________________________________________
Upstream point/station elevation =   350.000(Ft.)
Downstream point/station elevation =   340.000(Ft.)
Pipe length  =   270.00(Ft.)   Manning's N = 0.013
No. of pipes = 1  Required pipe flow  =    34.464(CFS)
Nearest computed pipe diameter  =     24.00(In.)
Calculated individual pipe flow  =    34.464(CFS)
Normal flow depth in pipe =   16.13(In.)
Flow top width inside pipe =   22.54(In.)
Critical depth could not be calculated.
Pipe flow velocity =     15.37(Ft/s)
Travel time through pipe =    0.29 min.
Time of concentration (TC) =     5.17 min.


++++++++++++++++++++++++++++++++++++++++++++++++++++++++++++++++++++++
Process from Point/Station      603.000 to Point/Station      611.000
**** SUBAREA FLOW ADDITION ****
______________________________________________________________________
Decimal fraction soil group A = 0.000
Decimal fraction soil group B = 0.000
Decimal fraction soil group C = 0.000
Decimal fraction soil group D = 1.000
[MEDIUM DENSITY RESIDENTIAL                  ]
(7.3 DU/A or Less       )
Impervious value, Ai = 0.400
Sub-Area C Value = 0.570
Time of concentration =     5.17 min.
Rainfall intensity =      7.482(In/Hr) for a   100.0 year storm
Effective runoff coefficient used for total area
(Q=KCIA) is C = 0.494  CA =      7.931
Subarea runoff =     24.878(CFS) for      1.150(Ac.)
Total runoff =     59.342(CFS)      Total area =      16.040(Ac.)


++++++++++++++++++++++++++++++++++++++++++++++++++++++++++++++++++++++
Process from Point/Station      611.000 to Point/Station      612.000
**** PIPEFLOW TRAVEL TIME (Program estimated size) ****
```

```
Upstream point/station elevation =   340.000(Ft.)
Downstream point/station elevation =   260.000(Ft.)
Pipe length  =   200.00(Ft.)   Manning's N = 0.013
No. of pipes = 1  Required pipe flow  =    59.342(CFS)
Nearest computed pipe diameter  =     18.00(In.)
Calculated individual pipe flow  =    59.342(CFS)
Normal flow depth in pipe =   13.27(In.)
Flow top width inside pipe =   15.85(In.)
Critical depth could not be calculated.
Pipe flow velocity =     42.50(Ft/s)
Travel time through pipe =    0.08 min.
Time of concentration (TC) =     5.24 min.


++++++++++++++++++++++++++++++++++++++++++++++++++++++++++++++++++++++
Process from Point/Station      611.000 to Point/Station      612.000
**** CONFLUENCE OF MAIN STREAMS ****
----------------------------------------------------------------------
The following data inside Main Stream is listed:
In Main Stream number: 1
Stream flow area =     16.040(Ac.)
Runoff from this stream =     59.342(CFS)
Time of concentration =    5.24 min.
Rainfall intensity =     7.410(In/Hr)
Program is now starting with Main Stream No. 2


++++++++++++++++++++++++++++++++++++++++++++++++++++++++++++++++++++++
Process from Point/Station      613.000 to Point/Station      614.000
**** INITIAL AREA EVALUATION ****
----------------------------------------------------------------------
Decimal fraction soil group A = 0.000
Decimal fraction soil group B = 0.000
Decimal fraction soil group C = 0.000
Decimal fraction soil group D = 1.000
[MEDIUM DENSITY RESIDENTIAL                    ]
(7.3 DU/A or Less        )
Impervious value, Ai = 0.400
Sub-Area C Value = 0.570
Initial subarea total flow distance  =  100.000(Ft.)
Highest elevation =  347.000(Ft.)
Lowest elevation =  340.000(Ft.)
Elevation difference =    7.000(Ft.) Slope =  7.000 %
INITIAL AREA TIME OF CONCENTRATION CALCULATIONS:
The maximum overland flow distance is 100.00 (Ft)
for the top area slope value of   7.00 %, in a development type of
 7.3 DU/A or Less
In Accordance With Table 3-2
Initial Area Time of Concentration =   6.00 minutes
 (for slope value of   5.00 %)
Rainfall intensity (I) =      6.793(In/Hr) for a   100.0 year storm
Effective runoff coefficient used for area (Q=KCIA) is C = 0.570
Subarea runoff =      0.310(CFS)
Total initial stream area =        0.080(Ac.)
```

```
++++++++++++++++++++++++++++++++++++++++++++++++++++++++++++++++++++++
Process from Point/Station      614.000 to Point/Station      615.000
**** STREET FLOW TRAVEL TIME + SUBAREA FLOW ADDITION ****
______________________________________________________________________
Top of street segment elevation =   340.000(Ft.)
End of street segment elevation =   302.000(Ft.)
Length of street segment  =   865.000(Ft.)
Height of curb above gutter flowline  =    6.0(In.)
Width of half street (curb to crown)  =  22.000(Ft.)
Distance from crown to crossfall grade break  =  18.000(Ft.)
Slope from gutter to grade break (v/hz) =   0.020
Slope from grade break to crown (v/hz)  =   0.020
Street flow is on [1] side(s) of the street
Distance from curb to property line  =  10.000(Ft.)
Slope from curb to property line (v/hz) =   0.020
Gutter width =   1.500(Ft.)
Gutter hike from flowline =  1.500(In.)
 Manning's N in gutter =  0.0150
 Manning's N from gutter to grade break =  0.0180
 Manning's N from grade break to crown =  0.0180
Estimated mean flow rate at midpoint of street =      5.638(CFS)
Depth of flow =   0.320(Ft.), Average velocity =   4.208(Ft/s)
Streetflow hydraulics at midpoint of street travel:
Halfstreet flow width =  11.262(Ft.)
Flow velocity =   4.21(Ft/s)
Travel time =    3.43 min.     TC =    9.43  min.
 Adding area flow to street
Decimal fraction soil group A = 0.000
Decimal fraction soil group B = 0.000
Decimal fraction soil group C = 0.000
Decimal fraction soil group D = 1.000
[MEDIUM DENSITY RESIDENTIAL                  ]
(7.3 DU/A or Less       )
Impervious value, Ai = 0.400
Sub-Area C Value = 0.570
Rainfall intensity =      5.076(In/Hr) for a   100.0 year storm
Effective runoff coefficient used for total area
(Q=KCIA) is C = 0.570  CA =      2.172
Subarea runoff =     10.714(CFS) for      3.730(Ac.)
Total runoff =     11.024(CFS)      Total area =       3.810(Ac.)
Street flow at end of street =     11.024(CFS)
Half street flow at end of street =     11.024(CFS)
Depth of flow =   0.389(Ft.), Average velocity =   4.935(Ft/s)
Flow width (from curb towards crown)=  14.706(Ft.)


++++++++++++++++++++++++++++++++++++++++++++++++++++++++++++++++++++++
Process from Point/Station      615.000 to Point/Station      612.000
**** PIPEFLOW TRAVEL TIME (Program estimated size) ****
______________________________________________________________________
Upstream point/station elevation =   302.000(Ft.)
Downstream point/station elevation =   260.000(Ft.)
Pipe length  =   210.00(Ft.)   Manning's N = 0.013
No. of pipes = 1  Required pipe flow  =    11.024(CFS)
Nearest computed pipe diameter  =     12.00(In.)
Calculated individual pipe flow  =    11.024(CFS)
Normal flow depth in pipe =    7.34(In.)
```

```
Flow top width inside pipe =   11.70(In.)
Critical depth could not be calculated.
Pipe flow velocity =     21.89(Ft/s)
Travel time through pipe =    0.16 min.
Time of concentration (TC) =     9.59 min.


++++++++++++++++++++++++++++++++++++++++++++++++++++++++++++++++++++++
Process from Point/Station      615.000 to Point/Station      612.000
**** CONFLUENCE OF MAIN STREAMS ****
______________________________________________________________________
The following data inside Main Stream is listed:
In Main Stream number: 2
Stream flow area =      3.810(Ac.)
Runoff from this stream =     11.024(CFS)
Time of concentration =    9.59 min.
Rainfall intensity =     5.021(In/Hr)
Summary of stream data:

Stream   Flow rate      TC            Rainfall Intensity
 No.       (CFS)       (min)                 (In/Hr)


1       59.342      5.24               7.410
2       11.024      9.59               5.021
Qmax(1) =
         1.000 *    1.000 *    59.342) +
         1.000 *    0.547 *    11.024) + =      65.373
Qmax(2) =
         0.678 *    1.000 *    59.342) +
         1.000 *    1.000 *    11.024) + =      51.239

Total of 2 main streams to confluence:
Flow rates before confluence point:
      59.342      11.024
Maximum flow rates at confluence using above data:
       65.373       51.239
Area of streams before confluence:
       16.040        3.810


Results of confluence:
Total flow rate =     65.373(CFS)
Time of concentration =     5.244 min.
Effective stream area after confluence  =     19.850(Ac.)


++++++++++++++++++++++++++++++++++++++++++++++++++++++++++++++++++++++
Process from Point/Station      612.000 to Point/Station      616.000
**** IMPROVED CHANNEL TRAVEL TIME ****
______________________________________________________________________
Upstream point elevation =   260.000(Ft.)
Downstream point elevation =   173.000(Ft.)
Channel length thru subarea  =   625.000(Ft.)
Channel base width      =    3.000(Ft.)
Slope or 'Z' of left channel bank =   2.000
Slope or 'Z' of right channel bank =   2.000
```

```
Estimated mean flow rate at midpoint of channel =     77.205(CFS)
Manning's 'N'    = 0.050
Maximum depth of channel  =    5.000(Ft.)
Flow(q) thru subarea =     77.205(CFS)
Depth of flow =   1.355(Ft.), Average velocity =   9.980(Ft/s)
Channel flow top width =    8.419(Ft.)
Flow Velocity =    9.98(Ft/s)
Travel time  =    1.04 min.
Time of concentration =    6.29 min.
Critical depth =      1.859(Ft.)
 Adding area flow to channel
Decimal fraction soil group A = 0.000
Decimal fraction soil group B = 0.000
Decimal fraction soil group C = 0.000
Decimal fraction soil group D = 1.000
[UNDISTURBED NATURAL TERRAIN                    ]
(Permanent Open Space   )
Impervious value, Ai = 0.000
Sub-Area C Value = 0.350
Rainfall intensity =      6.591(In/Hr) for a   100.0 year storm
Effective runoff coefficient used for total area
(Q=KCIA) is C = 0.457  CA =     13.498
Subarea runoff =     23.593(CFS) for      9.700(Ac.)
Total runoff =     88.966(CFS)      Total area =      29.550(Ac.)
Depth of flow =   1.453(Ft.), Average velocity =  10.364(Ft/s)
Critical depth =      2.000(Ft.)


++++++++++++++++++++++++++++++++++++++++++++++++++++++++++++++++++++++
Process from Point/Station      612.000 to Point/Station      616.000
**** CONFLUENCE OF MAIN STREAMS ****
______________________________________________________________________
The following data inside Main Stream is listed:
In Main Stream number: 1
Stream flow area =     29.550(Ac.)
Runoff from this stream =     88.966(CFS)
Time of concentration =    6.29 min.
Rainfall intensity =     6.591(In/Hr)
Program is now starting with Main Stream No. 2


++++++++++++++++++++++++++++++++++++++++++++++++++++++++++++++++++++++
Process from Point/Station      617.000 to Point/Station      618.000
**** INITIAL AREA EVALUATION ****
______________________________________________________________________
Decimal fraction soil group A = 0.000
Decimal fraction soil group B = 0.000
Decimal fraction soil group C = 0.000
Decimal fraction soil group D = 1.000
[MEDIUM DENSITY RESIDENTIAL                     ]
(7.3 DU/A or Less       )
Impervious value, Ai = 0.400
Sub-Area C Value = 0.570
Initial subarea total flow distance  =  100.000(Ft.)
Highest elevation =  345.000(Ft.)
Lowest elevation =  344.000(Ft.)
Elevation difference =    1.000(Ft.) Slope =  1.000 %
```

```
INITIAL AREA TIME OF CONCENTRATION CALCULATIONS:
The maximum overland flow distance is 65.00 (Ft)
for the top area slope value of   1.00 %, in a development type of
 7.3 DU/A or Less
In Accordance With Table 3-2
Initial Area Time of Concentration =   8.40 minutes
 (for slope value of   1.00 %)
Rainfall intensity (I) =      5.468(In/Hr) for a   100.0 year storm
Effective runoff coefficient used for area (Q=KCIA) is C = 0.570
Subarea runoff =      0.717(CFS)
Total initial stream area =        0.230(Ac.)


++++++++++++++++++++++++++++++++++++++++++++++++++++++++++++++++++++++
Process from Point/Station      618.000 to Point/Station      619.000
**** STREET FLOW TRAVEL TIME + SUBAREA FLOW ADDITION ****
______________________________________________________________________
Top of street segment elevation =   344.000(Ft.)
End of street segment elevation =   334.000(Ft.)
Length of street segment  =   510.000(Ft.)
Height of curb above gutter flowline  =    6.0(In.)
Width of half street (curb to crown)  =  22.000(Ft.)
Distance from crown to crossfall grade break  =  18.000(Ft.)
Slope from gutter to grade break (v/hz) =   0.020
Slope from grade break to crown (v/hz)  =   0.020
Street flow is on [1] side(s) of the street
Distance from curb to property line  =  10.000(Ft.)
Slope from curb to property line (v/hz) =   0.020
Gutter width =   1.500(Ft.)
Gutter hike from flowline =  1.500(In.)
 Manning's N in gutter =  0.0150
 Manning's N from gutter to grade break =  0.0180
 Manning's N from grade break to crown =  0.0180
Estimated mean flow rate at midpoint of street =      8.327(CFS)
Depth of flow =   0.404(Ft.), Average velocity =   3.396(Ft/s)
Streetflow hydraulics at midpoint of street travel:
Halfstreet flow width =  15.430(Ft.)
Flow velocity =   3.40(Ft/s)
Travel time =    2.50 min.     TC =   10.90  min.
 Adding area flow to street
Decimal fraction soil group A = 0.000
Decimal fraction soil group B = 0.000
Decimal fraction soil group C = 0.000
Decimal fraction soil group D = 1.000
[MEDIUM DENSITY RESIDENTIAL                  ]
(7.3 DU/A or Less       )
Impervious value, Ai = 0.400
Sub-Area C Value = 0.570
Rainfall intensity =      4.621(In/Hr) for a   100.0 year storm
Effective runoff coefficient used for total area
(Q=KCIA) is C = 0.570  CA =      3.437
Subarea runoff =     15.167(CFS) for      5.800(Ac.)
Total runoff =     15.883(CFS)      Total area =       6.030(Ac.)
Street flow at end of street =     15.883(CFS)
Half street flow at end of street =     15.883(CFS)
Depth of flow =   0.491(Ft.), Average velocity =   3.972(Ft/s)
Flow width (from curb towards crown)=  19.819(Ft.)
```

```
++++++++++++++++++++++++++++++++++++++++++++++++++++++++++++++++++++++
Process from Point/Station      619.000 to Point/Station      616.000
**** PIPEFLOW TRAVEL TIME (Program estimated size) ****
______________________________________________________________________
Upstream point/station elevation =   334.000(Ft.)
Downstream point/station elevation =   190.000(Ft.)
Pipe length  =   610.00(Ft.)   Manning's N = 0.013
No. of pipes = 1  Required pipe flow  =    15.883(CFS)
Nearest computed pipe diameter  =     12.00(In.)
Calculated individual pipe flow  =    15.883(CFS)
Normal flow depth in pipe =    9.05(In.)
Flow top width inside pipe =   10.34(In.)
Critical depth could not be calculated.
Pipe flow velocity =     25.00(Ft/s)
Travel time through pipe =    0.41 min.
Time of concentration (TC) =    11.31 min.


++++++++++++++++++++++++++++++++++++++++++++++++++++++++++++++++++++++
Process from Point/Station      619.000 to Point/Station      616.000
**** CONFLUENCE OF MAIN STREAMS ****
______________________________________________________________________
The following data inside Main Stream is listed:
In Main Stream number: 2
Stream flow area =      6.030(Ac.)
Runoff from this stream =     15.883(CFS)
Time of concentration =   11.31 min.
Rainfall intensity =     4.513(In/Hr)
Program is now starting with Main Stream No. 3


++++++++++++++++++++++++++++++++++++++++++++++++++++++++++++++++++++++
Process from Point/Station      620.000 to Point/Station      621.000
**** INITIAL AREA EVALUATION ****
______________________________________________________________________
Decimal fraction soil group A = 0.000
Decimal fraction soil group B = 0.000
Decimal fraction soil group C = 0.000
Decimal fraction soil group D = 1.000
[MEDIUM DENSITY RESIDENTIAL                    ]
(7.3 DU/A or Less       )
Impervious value, Ai = 0.400
Sub-Area C Value = 0.570
Initial subarea total flow distance  =  100.000(Ft.)
Highest elevation =  307.000(Ft.)
Lowest elevation =  306.000(Ft.)
Elevation difference =    1.000(Ft.) Slope =  1.000 %
INITIAL AREA TIME OF CONCENTRATION CALCULATIONS:
The maximum overland flow distance is 65.00 (Ft)
for the top area slope value of   1.00 %, in a development type of
 7.3 DU/A or Less
In Accordance With Table 3-2
Initial Area Time of Concentration =   8.40 minutes
 (for slope value of   1.00 %)
Rainfall intensity (I) =      5.468(In/Hr) for a   100.0 year storm
```

```
Effective runoff coefficient used for area (Q=KCIA) is C = 0.570
Subarea runoff =      0.499(CFS)
Total initial stream area =        0.160(Ac.)


++++++++++++++++++++++++++++++++++++++++++++++++++++++++++++++++++++++
Process from Point/Station      621.000 to Point/Station      622.000
**** STREET FLOW TRAVEL TIME + SUBAREA FLOW ADDITION ****
______________________________________________________________________
Top of street segment elevation =   306.000(Ft.)
End of street segment elevation =   285.000(Ft.)
Length of street segment  =   685.000(Ft.)
Height of curb above gutter flowline  =    6.0(In.)
Width of half street (curb to crown)  =  22.000(Ft.)
Distance from crown to crossfall grade break  =  18.000(Ft.)
Slope from gutter to grade break (v/hz) =   0.020
Slope from grade break to crown (v/hz)  =   0.020
Street flow is on [1] side(s) of the street
Distance from curb to property line  =  10.000(Ft.)
Slope from curb to property line (v/hz) =   0.020
Gutter width =   1.500(Ft.)
Gutter hike from flowline =  1.500(In.)
 Manning's N in gutter =  0.0150
 Manning's N from gutter to grade break =  0.0180
 Manning's N from grade break to crown =  0.0180
Estimated mean flow rate at midpoint of street =      7.991(CFS)
Depth of flow =   0.373(Ft.), Average velocity =   3.985(Ft/s)
Streetflow hydraulics at midpoint of street travel:
Halfstreet flow width =  13.907(Ft.)
Flow velocity =   3.98(Ft/s)
Travel time =    2.87 min.     TC =   11.27  min.
 Adding area flow to street
Decimal fraction soil group A = 0.000
Decimal fraction soil group B = 0.000
Decimal fraction soil group C = 0.000
Decimal fraction soil group D = 1.000
[MEDIUM DENSITY RESIDENTIAL                  ]
(7.3 DU/A or Less       )
Impervious value, Ai = 0.400
Sub-Area C Value = 0.570
Rainfall intensity =      4.525(In/Hr) for a   100.0 year storm
Effective runoff coefficient used for total area
(Q=KCIA) is C = 0.570  CA =      3.409
Subarea runoff =     14.925(CFS) for      5.820(Ac.)
Total runoff =     15.423(CFS)      Total area =       5.980(Ac.)
Street flow at end of street =     15.423(CFS)
Half street flow at end of street =     15.423(CFS)
Depth of flow =   0.455(Ft.), Average velocity =   4.670(Ft/s)
Flow width (from curb towards crown)=  17.977(Ft.)


++++++++++++++++++++++++++++++++++++++++++++++++++++++++++++++++++++++
Process from Point/Station      622.000 to Point/Station      622.100
**** PIPEFLOW TRAVEL TIME (Program estimated size) ****
______________________________________________________________________
Upstream point/station elevation =   285.000(Ft.)
Downstream point/station elevation =   252.000(Ft.)
```

```
Pipe length  =   255.00(Ft.)   Manning's N = 0.013
No. of pipes = 1  Required pipe flow  =    15.423(CFS)
Nearest computed pipe diameter  =     15.00(In.)
Calculated individual pipe flow  =    15.423(CFS)
Normal flow depth in pipe =    8.93(In.)
Flow top width inside pipe =   14.72(In.)
Critical depth could not be calculated.
Pipe flow velocity =     20.25(Ft/s)
Travel time through pipe =    0.21 min.
Time of concentration (TC) =    11.47 min.


++++++++++++++++++++++++++++++++++++++++++++++++++++++++++++++++++++++
Process from Point/Station      622.000 to Point/Station      622.100
**** SUBAREA FLOW ADDITION ****
______________________________________________________________________
Decimal fraction soil group A = 0.000
Decimal fraction soil group B = 0.000
Decimal fraction soil group C = 0.000
Decimal fraction soil group D = 1.000
[MEDIUM DENSITY RESIDENTIAL                  ]
(7.3 DU/A or Less       )
Impervious value, Ai = 0.400
Sub-Area C Value = 0.570
Time of concentration =    11.47 min.
Rainfall intensity =      4.471(In/Hr) for a   100.0 year storm
Effective runoff coefficient used for total area
(Q=KCIA) is C = 0.570  CA =      5.022
Subarea runoff =      7.030(CFS) for      2.830(Ac.)
Total runoff =     22.453(CFS)      Total area =       8.810(Ac.)


++++++++++++++++++++++++++++++++++++++++++++++++++++++++++++++++++++++
Process from Point/Station      622.100 to Point/Station      616.000
**** PIPEFLOW TRAVEL TIME (Program estimated size) ****
______________________________________________________________________
Upstream point/station elevation =   252.000(Ft.)
Downstream point/station elevation =   203.000(Ft.)
Pipe length  =   150.00(Ft.)   Manning's N = 0.013
No. of pipes = 1  Required pipe flow  =    22.453(CFS)
Nearest computed pipe diameter  =     15.00(In.)
Calculated individual pipe flow  =    22.453(CFS)
Normal flow depth in pipe =    8.45(In.)
Flow top width inside pipe =   14.88(In.)
Critical depth could not be calculated.
Pipe flow velocity =     31.55(Ft/s)
Travel time through pipe =    0.08 min.
Time of concentration (TC) =    11.55 min.


++++++++++++++++++++++++++++++++++++++++++++++++++++++++++++++++++++++
Process from Point/Station      622.100 to Point/Station      616.000
**** CONFLUENCE OF MAIN STREAMS ****
______________________________________________________________________
The following data inside Main Stream is listed:
In Main Stream number: 3
Stream flow area =      8.810(Ac.)
```

```
Runoff from this stream =     22.453(CFS)
Time of concentration =   11.55 min.
Rainfall intensity =     4.451(In/Hr)
Summary of stream data:

Stream   Flow rate      TC            Rainfall Intensity
 No.       (CFS)       (min)                 (In/Hr)


1       88.966      6.29                6.591
2       15.883     11.31                4.513
3       22.453     11.55                4.451
Qmax(1) =
         1.000 *    1.000 *    88.966) +
         1.000 *    0.556 *    15.883) +
         1.000 *    0.544 *    22.453) + =     110.014
Qmax(2) =
         0.685 *    1.000 *    88.966) +
         1.000 *    1.000 *    15.883) +
         1.000 *    0.979 *    22.453) + =      98.782
Qmax(3) =
         0.675 *    1.000 *    88.966) +
         0.986 *    1.000 *    15.883) +
         1.000 *    1.000 *    22.453) + =      98.205

Total of 3 main streams to confluence:
Flow rates before confluence point:
      88.966      15.883      22.453
Maximum flow rates at confluence using above data:
      110.014       98.782       98.205
Area of streams before confluence:
       29.550        6.030        8.810


Results of confluence:
Total flow rate =    110.014(CFS)
Time of concentration =     6.287 min.
Effective stream area after confluence  =     44.390(Ac.)


++++++++++++++++++++++++++++++++++++++++++++++++++++++++++++++++++++++++
Process from Point/Station      616.000 to Point/Station      623.000
**** IMPROVED CHANNEL TRAVEL TIME ****
________________________________________________________________________
Upstream point elevation =   173.000(Ft.)
Downstream point elevation =   149.000(Ft.)
Channel length thru subarea  =   460.000(Ft.)
Channel base width      =    5.000(Ft.)
Slope or 'Z' of left channel bank =   4.000
Slope or 'Z' of right channel bank =   4.000
Estimated mean flow rate at midpoint of channel =    125.248(CFS)
Manning's 'N'    = 0.050
Maximum depth of channel  =    5.000(Ft.)
Flow(q) thru subarea =    125.248(CFS)
Depth of flow =   1.607(Ft.), Average velocity =   6.817(Ft/s)
Channel flow top width =   17.859(Ft.)
Flow Velocity =    6.82(Ft/s)
```

```
Travel time  =    1.12 min.
Time of concentration =    7.41 min.
Critical depth =      1.750(Ft.)
 Adding area flow to channel
Decimal fraction soil group A = 0.000
Decimal fraction soil group B = 0.000
Decimal fraction soil group C = 0.000
Decimal fraction soil group D = 1.000
[UNDISTURBED NATURAL TERRAIN                    ]
(Permanent Open Space   )
Impervious value, Ai = 0.000
Sub-Area C Value = 0.350
Rainfall intensity =      5.927(In/Hr) for a   100.0 year storm
Effective runoff coefficient used for total area
(Q=KCIA) is C = 0.480  CA =     23.714
Subarea runoff =     30.546(CFS) for      5.020(Ac.)
Total runoff =    140.560(CFS)      Total area =      49.410(Ac.)
Depth of flow =   1.697(Ft.), Average velocity =   7.027(Ft/s)
Critical depth =      1.859(Ft.)


++++++++++++++++++++++++++++++++++++++++++++++++++++++++++++++++++++++
Process from Point/Station      616.000 to Point/Station      623.000
**** CONFLUENCE OF MAIN STREAMS ****
______________________________________________________________________
The following data inside Main Stream is listed:
In Main Stream number: 1
Stream flow area =     49.410(Ac.)
Runoff from this stream =    140.560(CFS)
Time of concentration =    7.41 min.
Rainfall intensity =     5.927(In/Hr)
Program is now starting with Main Stream No. 2


++++++++++++++++++++++++++++++++++++++++++++++++++++++++++++++++++++++
Process from Point/Station      624.000 to Point/Station      625.000
**** INITIAL AREA EVALUATION ****
______________________________________________________________________
Decimal fraction soil group A = 0.000
Decimal fraction soil group B = 0.000
Decimal fraction soil group C = 0.000
Decimal fraction soil group D = 1.000
[MEDIUM DENSITY RESIDENTIAL                     ]
(7.3 DU/A or Less       )
Impervious value, Ai = 0.400
Sub-Area C Value = 0.570
Initial subarea total flow distance  =  120.000(Ft.)
Highest elevation =  249.000(Ft.)
Lowest elevation =  246.000(Ft.)
Elevation difference =    3.000(Ft.) Slope =  2.500 %
INITIAL AREA TIME OF CONCENTRATION CALCULATIONS:
The maximum overland flow distance is 95.00 (Ft)
for the top area slope value of   2.50 %, in a development type of
 7.3 DU/A or Less
In Accordance With Table 3-2
Initial Area Time of Concentration =   7.00 minutes
 (for slope value of   3.00 %)
```

```
Rainfall intensity (I) =      6.150(In/Hr) for a   100.0 year storm
Effective runoff coefficient used for area (Q=KCIA) is C = 0.570
Subarea runoff =      0.841(CFS)
Total initial stream area =        0.240(Ac.)


++++++++++++++++++++++++++++++++++++++++++++++++++++++++++++++++++++++
Process from Point/Station      625.000 to Point/Station      626.000
**** STREET FLOW TRAVEL TIME + SUBAREA FLOW ADDITION ****
______________________________________________________________________
Top of street segment elevation =   246.000(Ft.)
End of street segment elevation =   240.500(Ft.)
Length of street segment  =   345.000(Ft.)
Height of curb above gutter flowline  =    6.0(In.)
Width of half street (curb to crown)  =  22.000(Ft.)
Distance from crown to crossfall grade break  =  18.000(Ft.)
Slope from gutter to grade break (v/hz) =   0.020
Slope from grade break to crown (v/hz)  =   0.020
Street flow is on [1] side(s) of the street
Distance from curb to property line  =  10.000(Ft.)
Slope from curb to property line (v/hz) =   0.020
Gutter width =   1.500(Ft.)
Gutter hike from flowline =  1.500(In.)
 Manning's N in gutter =  0.0150
 Manning's N from gutter to grade break =  0.0180
 Manning's N from grade break to crown =  0.0180
Estimated mean flow rate at midpoint of street =      4.941(CFS)
Depth of flow =   0.357(Ft.), Average velocity =   2.770(Ft/s)
Streetflow hydraulics at midpoint of street travel:
Halfstreet flow width =  13.087(Ft.)
Flow velocity =   2.77(Ft/s)
Travel time =    2.08 min.     TC =    9.08  min.
 Adding area flow to street
Decimal fraction soil group A = 0.000
Decimal fraction soil group B = 0.000
Decimal fraction soil group C = 0.000
Decimal fraction soil group D = 1.000
[MEDIUM DENSITY RESIDENTIAL                  ]
(7.3 DU/A or Less       )
Impervious value, Ai = 0.400
Sub-Area C Value = 0.570
Rainfall intensity =      5.202(In/Hr) for a   100.0 year storm
Effective runoff coefficient used for total area
(Q=KCIA) is C = 0.570  CA =      1.727
Subarea runoff =      8.142(CFS) for      2.790(Ac.)
Total runoff =      8.984(CFS)      Total area =       3.030(Ac.)
Street flow at end of street =      8.984(CFS)
Half street flow at end of street =      8.984(CFS)
Depth of flow =   0.426(Ft.), Average velocity =   3.197(Ft/s)
Flow width (from curb towards crown)=  16.548(Ft.)


++++++++++++++++++++++++++++++++++++++++++++++++++++++++++++++++++++++
Process from Point/Station      626.000 to Point/Station      627.000
**** PIPEFLOW TRAVEL TIME (Program estimated size) ****
______________________________________________________________________
Upstream point/station elevation =   240.500(Ft.)
```

```
Downstream point/station elevation =   203.000(Ft.)
Pipe length  =   350.00(Ft.)   Manning's N = 0.013
No. of pipes = 1  Required pipe flow  =     8.984(CFS)
Nearest computed pipe diameter  =     12.00(In.)
Calculated individual pipe flow  =     8.984(CFS)
Normal flow depth in pipe =    7.90(In.)
Flow top width inside pipe =   11.38(In.)
Critical depth could not be calculated.
Pipe flow velocity =     16.38(Ft/s)
Travel time through pipe =    0.36 min.
Time of concentration (TC) =     9.43 min.


++++++++++++++++++++++++++++++++++++++++++++++++++++++++++++++++++++++
Process from Point/Station      626.000 to Point/Station      627.000
**** SUBAREA FLOW ADDITION ****
______________________________________________________________________
Decimal fraction soil group A = 0.000
Decimal fraction soil group B = 0.000
Decimal fraction soil group C = 0.000
Decimal fraction soil group D = 1.000
[MEDIUM DENSITY RESIDENTIAL                  ]
(7.3 DU/A or Less       )
Impervious value, Ai = 0.400
Sub-Area C Value = 0.570
Time of concentration =     9.43 min.
Rainfall intensity =      5.074(In/Hr) for a   100.0 year storm
Effective runoff coefficient used for total area
(Q=KCIA) is C = 0.570  CA =      4.948
Subarea runoff =     16.121(CFS) for      5.650(Ac.)
Total runoff =     25.104(CFS)      Total area =       8.680(Ac.)


++++++++++++++++++++++++++++++++++++++++++++++++++++++++++++++++++++++
Process from Point/Station      627.000 to Point/Station      623.000
**** PIPEFLOW TRAVEL TIME (Program estimated size) ****
______________________________________________________________________
Upstream point/station elevation =   203.000(Ft.)
Downstream point/station elevation =   149.000(Ft.)
Pipe length  =   275.00(Ft.)   Manning's N = 0.013
No. of pipes = 1  Required pipe flow  =    25.104(CFS)
Nearest computed pipe diameter  =     15.00(In.)
Calculated individual pipe flow  =    25.104(CFS)
Normal flow depth in pipe =   10.90(In.)
Flow top width inside pipe =   13.37(In.)
Critical depth could not be calculated.
Pipe flow velocity =     26.31(Ft/s)
Travel time through pipe =    0.17 min.
Time of concentration (TC) =     9.61 min.


++++++++++++++++++++++++++++++++++++++++++++++++++++++++++++++++++++++
Process from Point/Station      627.000 to Point/Station      623.000
**** CONFLUENCE OF MAIN STREAMS ****
______________________________________________________________________
The following data inside Main Stream is listed:
In Main Stream number: 2
```

```
Stream flow area =      8.680(Ac.)
Runoff from this stream =     25.104(CFS)
Time of concentration =    9.61 min.
Rainfall intensity =     5.014(In/Hr)
Program is now starting with Main Stream No. 3


++++++++++++++++++++++++++++++++++++++++++++++++++++++++++++++++++++++
Process from Point/Station      628.000 to Point/Station      629.000
**** INITIAL AREA EVALUATION ****
______________________________________________________________________
Decimal fraction soil group A = 0.000
Decimal fraction soil group B = 0.000
Decimal fraction soil group C = 0.000
Decimal fraction soil group D = 1.000
[MEDIUM DENSITY RESIDENTIAL                    ]
(7.3 DU/A or Less       )
Impervious value, Ai = 0.400
Sub-Area C Value = 0.570
Initial subarea total flow distance  =  105.000(Ft.)
Highest elevation =  208.000(Ft.)
Lowest elevation =  206.000(Ft.)
Elevation difference =    2.000(Ft.) Slope =  1.905 %
INITIAL AREA TIME OF CONCENTRATION CALCULATIONS:
The maximum overland flow distance is 80.00 (Ft)
for the top area slope value of   1.91 %, in a development type of
 7.3 DU/A or Less
In Accordance With Table 3-2
Initial Area Time of Concentration =   7.40 minutes
 (for slope value of   2.00 %)
Rainfall intensity (I) =      5.934(In/Hr) for a   100.0 year storm
Effective runoff coefficient used for area (Q=KCIA) is C = 0.570
Subarea runoff =      0.913(CFS)
Total initial stream area =        0.270(Ac.)


++++++++++++++++++++++++++++++++++++++++++++++++++++++++++++++++++++++
Process from Point/Station      629.000 to Point/Station      630.000
**** STREET FLOW TRAVEL TIME + SUBAREA FLOW ADDITION ****
______________________________________________________________________
Top of street segment elevation =   206.000(Ft.)
End of street segment elevation =   178.000(Ft.)
Length of street segment  =   730.000(Ft.)
Height of curb above gutter flowline  =    6.0(In.)
Width of half street (curb to crown)  =  22.000(Ft.)
Distance from crown to crossfall grade break  =  18.000(Ft.)
Slope from gutter to grade break (v/hz) =   0.020
Slope from grade break to crown (v/hz)  =   0.020
Street flow is on [1] side(s) of the street
Distance from curb to property line  =  10.000(Ft.)
Slope from curb to property line (v/hz) =   0.020
Gutter width =   1.500(Ft.)
Gutter hike from flowline =  1.500(In.)
 Manning's N in gutter =  0.0150
 Manning's N from gutter to grade break =  0.0180
 Manning's N from grade break to crown =  0.0180
Estimated mean flow rate at midpoint of street =      7.435(CFS)
```

```
Depth of flow =   0.354(Ft.), Average velocity =   4.266(Ft/s)
Streetflow hydraulics at midpoint of street travel:
Halfstreet flow width =  12.930(Ft.)
Flow velocity =   4.27(Ft/s)
Travel time =    2.85 min.     TC =   10.25  min.
 Adding area flow to street
Decimal fraction soil group A = 0.000
Decimal fraction soil group B = 0.000
Decimal fraction soil group C = 0.000
Decimal fraction soil group D = 1.000
[MEDIUM DENSITY RESIDENTIAL                    ]
(7.3 DU/A or Less        )
Impervious value, Ai = 0.400
Sub-Area C Value = 0.570
Rainfall intensity =      4.808(In/Hr) for a   100.0 year storm
Effective runoff coefficient used for total area
(Q=KCIA) is C = 0.570  CA =      2.890
Subarea runoff =     12.982(CFS) for      4.800(Ac.)
Total runoff =     13.896(CFS)      Total area =       5.070(Ac.)
Street flow at end of street =     13.896(CFS)
Half street flow at end of street =     13.896(CFS)
Depth of flow =   0.426(Ft.), Average velocity =   4.956(Ft/s)
Flow width (from curb towards crown)=  16.530(Ft.)


++++++++++++++++++++++++++++++++++++++++++++++++++++++++++++++++++++++
Process from Point/Station      630.000 to Point/Station      623.000
**** PIPEFLOW TRAVEL TIME (Program estimated size) ****
______________________________________________________________________
Upstream point/station elevation =   178.000(Ft.)
Downstream point/station elevation =   149.000(Ft.)
Pipe length  =   300.00(Ft.)   Manning's N = 0.013
No. of pipes = 1  Required pipe flow  =    13.896(CFS)
Nearest computed pipe diameter  =     15.00(In.)
Calculated individual pipe flow  =    13.896(CFS)
Normal flow depth in pipe =    9.18(In.)
Flow top width inside pipe =   14.62(In.)
Critical depth could not be calculated.
Pipe flow velocity =     17.66(Ft/s)
Travel time through pipe =    0.28 min.
Time of concentration (TC) =    10.54 min.


++++++++++++++++++++++++++++++++++++++++++++++++++++++++++++++++++++++
Process from Point/Station      630.000 to Point/Station      623.000
**** CONFLUENCE OF MAIN STREAMS ****
______________________________________________________________________
The following data inside Main Stream is listed:
In Main Stream number: 3
Stream flow area =      5.070(Ac.)
Runoff from this stream =     13.896(CFS)
Time of concentration =   10.54 min.
Rainfall intensity =     4.725(In/Hr)
Summary of stream data:

Stream   Flow rate      TC            Rainfall Intensity
 No.       (CFS)       (min)                 (In/Hr)
```

```
1       140.560      7.41                5.927
2        25.104      9.61                5.014
3        13.896     10.54                4.725
Qmax(1) =
          1.000 *    1.000 *   140.560) +
          1.000 *    0.772 *    25.104) +
          1.000 *    0.704 *    13.896) + =     169.706
Qmax(2) =
          0.846 *    1.000 *   140.560) +
          1.000 *    1.000 *    25.104) +
          1.000 *    0.912 *    13.896) + =     156.686
Qmax(3) =
          0.797 *    1.000 *   140.560) +
          0.942 *    1.000 *    25.104) +
          1.000 *    1.000 *    13.896) + =     149.586

Total of 3 main streams to confluence:
Flow rates before confluence point:
     140.560      25.104      13.896
Maximum flow rates at confluence using above data:
      169.706      156.686      149.586
Area of streams before confluence:
       49.410        8.680        5.070


Results of confluence:
Total flow rate =    169.706(CFS)
Time of concentration =     7.412 min.
Effective stream area after confluence  =     63.160(Ac.)


++++++++++++++++++++++++++++++++++++++++++++++++++++++++++++++++++++++
Process from Point/Station      623.000 to Point/Station      631.000
**** PIPEFLOW TRAVEL TIME (Program estimated size) ****
______________________________________________________________________
Upstream point/station elevation =   149.000(Ft.)
Downstream point/station elevation =   126.000(Ft.)
Pipe length  =   440.00(Ft.)   Manning's N = 0.013
No. of pipes = 1  Required pipe flow  =   169.706(CFS)
Nearest computed pipe diameter  =     39.00(In.)
Calculated individual pipe flow  =   169.706(CFS)
Normal flow depth in pipe =   28.88(In.)
Flow top width inside pipe =   34.20(In.)
Critical depth could not be calculated.
Pipe flow velocity =     25.75(Ft/s)
Travel time through pipe =    0.28 min.
Time of concentration (TC) =     7.70 min.


++++++++++++++++++++++++++++++++++++++++++++++++++++++++++++++++++++++
Process from Point/Station      623.000 to Point/Station      631.000
**** SUBAREA FLOW ADDITION ****
______________________________________________________________________
Decimal fraction soil group A = 0.000
Decimal fraction soil group B = 0.000
```

```
Decimal fraction soil group C = 0.000
Decimal fraction soil group D = 1.000
[UNDISTURBED NATURAL TERRAIN                    ]
(Permanent Open Space   )
Impervious value, Ai = 0.000
Sub-Area C Value = 0.350
Time of concentration =     7.70 min.
Rainfall intensity =      5.785(In/Hr) for a   100.0 year storm
Effective runoff coefficient used for total area
(Q=KCIA) is C = 0.492  CA =     32.703
Subarea runoff =     19.477(CFS) for      3.290(Ac.)
Total runoff =    189.184(CFS)      Total area =      66.450(Ac.)


++++++++++++++++++++++++++++++++++++++++++++++++++++++++++++++++++++++
Process from Point/Station      631.000 to Point/Station      633.000
**** IMPROVED CHANNEL TRAVEL TIME ****
______________________________________________________________________
Upstream point elevation =   126.000(Ft.)
Downstream point elevation =   110.000(Ft.)
Channel length thru subarea  =   253.000(Ft.)
Channel base width      =    5.000(Ft.)
Slope or 'Z' of left channel bank =   3.000
Slope or 'Z' of right channel bank =   3.000
Estimated mean flow rate at midpoint of channel =    192.377(CFS)
Manning's 'N'    = 0.045
Maximum depth of channel  =    5.000(Ft.)
Flow(q) thru subarea =    192.377(CFS)
Depth of flow =   1.911(Ft.), Average velocity =   9.380(Ft/s)
Channel flow top width =   16.466(Ft.)
Flow Velocity =    9.38(Ft/s)
Travel time  =    0.45 min.
Time of concentration =    8.15 min.
Critical depth =      2.328(Ft.)
 Adding area flow to channel
Decimal fraction soil group A = 0.000
Decimal fraction soil group B = 0.000
Decimal fraction soil group C = 0.000
Decimal fraction soil group D = 1.000
[UNDISTURBED NATURAL TERRAIN                    ]
(Permanent Open Space   )
Impervious value, Ai = 0.000
Sub-Area C Value = 0.350
Rainfall intensity =      5.577(In/Hr) for a   100.0 year storm
Effective runoff coefficient used for total area
(Q=KCIA) is C = 0.479  CA =     35.058
Subarea runoff =      6.335(CFS) for      6.730(Ac.)
Total runoff =    195.519(CFS)      Total area =      73.180(Ac.)
Depth of flow =   1.926(Ft.), Average velocity =   9.420(Ft/s)
Critical depth =      2.344(Ft.)


++++++++++++++++++++++++++++++++++++++++++++++++++++++++++++++++++++++
Process from Point/Station      633.000 to Point/Station      645.000
**** PIPEFLOW TRAVEL TIME (Program estimated size) ****
______________________________________________________________________
Upstream point/station elevation =   110.000(Ft.)
```

```
Downstream point/station elevation =   104.000(Ft.)
Pipe length  =   500.00(Ft.)   Manning's N = 0.013
No. of pipes = 1  Required pipe flow  =   195.519(CFS)
Nearest computed pipe diameter  =     54.00(In.)
Calculated individual pipe flow  =   195.519(CFS)
Normal flow depth in pipe =   40.31(In.)
Flow top width inside pipe =   46.98(In.)
Critical Depth =   48.05(In.)
Pipe flow velocity =     15.34(Ft/s)
Travel time through pipe =    0.54 min.
Time of concentration (TC) =     8.69 min.


++++++++++++++++++++++++++++++++++++++++++++++++++++++++++++++++++++++
Process from Point/Station      633.000 to Point/Station      645.000
**** CONFLUENCE OF MINOR STREAMS ****
______________________________________________________________________
Along Main Stream number: 1 in normal stream number 1
Stream flow area =     73.180(Ac.)
Runoff from this stream =    195.519(CFS)
Time of concentration =    8.69 min.
Rainfall intensity =     5.350(In/Hr)


++++++++++++++++++++++++++++++++++++++++++++++++++++++++++++++++++++++
Process from Point/Station      642.000 to Point/Station      643.000
**** INITIAL AREA EVALUATION ****
______________________________________________________________________
Decimal fraction soil group A = 0.000
Decimal fraction soil group B = 0.000
Decimal fraction soil group C = 0.000
Decimal fraction soil group D = 1.000
[UNDISTURBED NATURAL TERRAIN                    ]
(Permanent Open Space   )
Impervious value, Ai = 0.000
Sub-Area C Value = 0.350
Initial subarea total flow distance  =  120.000(Ft.)
Highest elevation =  329.000(Ft.)
Lowest elevation =  323.000(Ft.)
Elevation difference =    6.000(Ft.) Slope =  5.000 %
INITIAL AREA TIME OF CONCENTRATION CALCULATIONS:
The maximum overland flow distance is 100.00 (Ft)
for the top area slope value of   5.00 %, in a development type of
 Permanent Open Space
In Accordance With Figure 3-3
Initial Area Time of Concentration =   7.89 minutes
TC = [1.8*(1.1-C)*distance(Ft.)^.5)/(% slope^(1/3)]
TC = [1.8*(1.1-0.3500)*( 100.000^.5)/(   5.000^(1/3)]=   7.89
Rainfall intensity (I) =      5.691(In/Hr) for a   100.0 year storm
Effective runoff coefficient used for area (Q=KCIA) is C = 0.350
Subarea runoff =      0.239(CFS)
Total initial stream area =        0.120(Ac.)


++++++++++++++++++++++++++++++++++++++++++++++++++++++++++++++++++++++
Process from Point/Station      643.000 to Point/Station      644.000
**** IMPROVED CHANNEL TRAVEL TIME ****
```

```
Upstream point elevation =   323.000(Ft.)
Downstream point elevation =   109.000(Ft.)
Channel length thru subarea  =   805.000(Ft.)
Channel base width      =   10.000(Ft.)
Slope or 'Z' of left channel bank =   2.000
Slope or 'Z' of right channel bank =   2.000
Estimated mean flow rate at midpoint of channel =      5.975(CFS)
Manning's 'N'    = 0.018
Maximum depth of channel  =    1.000(Ft.)
Flow(q) thru subarea =      5.975(CFS)
Depth of flow =   0.077(Ft.), Average velocity =   7.622(Ft/s)
Channel flow top width =   10.309(Ft.)
Flow Velocity =    7.62(Ft/s)
Travel time  =    1.76 min.
Time of concentration =    9.66 min.
Critical depth =      0.219(Ft.)
 Adding area flow to channel
Decimal fraction soil group A = 0.000
Decimal fraction soil group B = 0.000
Decimal fraction soil group C = 0.000
Decimal fraction soil group D = 1.000
[UNDISTURBED NATURAL TERRAIN                  ]
(Permanent Open Space   )
Impervious value, Ai = 0.000
Sub-Area C Value = 0.350
Rainfall intensity =      4.998(In/Hr) for a   100.0 year storm
Effective runoff coefficient used for total area
(Q=KCIA) is C = 0.350  CA =      2.331
Subarea runoff =     11.411(CFS) for      6.540(Ac.)
Total runoff =     11.650(CFS)      Total area =       6.660(Ac.)
Depth of flow =   0.115(Ft.), Average velocity =   9.891(Ft/s)
Critical depth =      0.340(Ft.)


++++++++++++++++++++++++++++++++++++++++++++++++++++++++++++++++++++++
Process from Point/Station      644.000 to Point/Station      645.000
**** PIPEFLOW TRAVEL TIME (Program estimated size) ****
```

---

```
Upstream point/station elevation =   109.000(Ft.)
Downstream point/station elevation =   104.000(Ft.)
Pipe length  =    47.00(Ft.)   Manning's N = 0.013
No. of pipes = 1  Required pipe flow  =    11.650(CFS)
Nearest computed pipe diameter  =     15.00(In.)
Calculated individual pipe flow  =    11.650(CFS)
Normal flow depth in pipe =    7.97(In.)
Flow top width inside pipe =   14.97(In.)
Critical depth could not be calculated.
Pipe flow velocity =     17.60(Ft/s)
Travel time through pipe =    0.04 min.
Time of concentration (TC) =     9.70 min.


++++++++++++++++++++++++++++++++++++++++++++++++++++++++++++++++++++++
Process from Point/Station      644.000 to Point/Station      645.000
**** CONFLUENCE OF MINOR STREAMS ****
```

---

```
Along Main Stream number: 1 in normal stream number 2
Stream flow area =      6.660(Ac.)
Runoff from this stream =     11.650(CFS)
Time of concentration =    9.70 min.
Rainfall intensity =     4.983(In/Hr)
Summary of stream data:

Stream   Flow rate      TC            Rainfall Intensity
 No.       (CFS)       (min)                 (In/Hr)


1      195.519      8.69                5.350
2       11.650      9.70                4.983
Qmax(1) =
         1.000 *    1.000 *   195.519) +
         1.000 *    0.896 *    11.650) + =     205.956
Qmax(2) =
         0.932 *    1.000 *   195.519) +
         1.000 *    1.000 *    11.650) + =     193.781

Total of 2 streams to confluence:
Flow rates before confluence point:
     195.519      11.650
Maximum flow rates at confluence using above data:
      205.956      193.781
Area of streams before confluence:
       73.180        6.660
Results of confluence:
Total flow rate =    205.956(CFS)
Time of concentration =     8.690 min.
Effective stream area after confluence =     79.840(Ac.)


++++++++++++++++++++++++++++++++++++++++++++++++++++++++++++++++++++++
Process from Point/Station      645.000 to Point/Station      646.000
**** PIPEFLOW TRAVEL TIME (Program estimated size) ****
______________________________________________________________________
Upstream point/station elevation =   104.000(Ft.)
Downstream point/station elevation =   102.500(Ft.)
Pipe length  =   186.50(Ft.)   Manning's N = 0.013
No. of pipes = 1  Required pipe flow  =   205.956(CFS)
Nearest computed pipe diameter  =     60.00(In.)
Calculated individual pipe flow  =   205.956(CFS)
Normal flow depth in pipe =   43.78(In.)
Flow top width inside pipe =   53.29(In.)
Critical Depth =   49.08(In.)
Pipe flow velocity =     13.43(Ft/s)
Travel time through pipe =    0.23 min.
Time of concentration (TC) =     8.92 min.


++++++++++++++++++++++++++++++++++++++++++++++++++++++++++++++++++++++
Process from Point/Station      645.000 to Point/Station      646.000
**** CONFLUENCE OF MINOR STREAMS ****
______________________________________________________________________
Along Main Stream number: 1 in normal stream number 1
Stream flow area =     79.840(Ac.)
```

```
Runoff from this stream =    205.956(CFS)
Time of concentration =    8.92 min.
Rainfall intensity =     5.260(In/Hr)


++++++++++++++++++++++++++++++++++++++++++++++++++++++++++++++++++++++
Process from Point/Station      637.000 to Point/Station      638.000
**** INITIAL AREA EVALUATION ****
______________________________________________________________________
Decimal fraction soil group A = 0.000
Decimal fraction soil group B = 0.000
Decimal fraction soil group C = 0.000
Decimal fraction soil group D = 1.000
[UNDISTURBED NATURAL TERRAIN                    ]
(Permanent Open Space   )
Impervious value, Ai = 0.000
Sub-Area C Value = 0.350
Initial subarea total flow distance  =   98.000(Ft.)
Highest elevation =  213.000(Ft.)
Lowest elevation =  206.000(Ft.)
Elevation difference =    7.000(Ft.) Slope =  7.143 %
INITIAL AREA TIME OF CONCENTRATION CALCULATIONS:
The maximum overland flow distance is 100.00 (Ft)
for the top area slope value of   7.14 %, in a development type of
 Permanent Open Space
In Accordance With Figure 3-3
Initial Area Time of Concentration =   7.01 minutes
TC = [1.8*(1.1-C)*distance(Ft.)^.5)/(% slope^(1/3)]
TC = [1.8*(1.1-0.3500)*( 100.000^.5)/(   7.143^(1/3)]=   7.01
Rainfall intensity (I) =      6.145(In/Hr) for a   100.0 year storm
Effective runoff coefficient used for area (Q=KCIA) is C = 0.350
Subarea runoff =      0.043(CFS)
Total initial stream area =        0.020(Ac.)


++++++++++++++++++++++++++++++++++++++++++++++++++++++++++++++++++++++
Process from Point/Station      638.000 to Point/Station      639.000
**** IMPROVED CHANNEL TRAVEL TIME ****
______________________________________________________________________
Upstream point elevation =   206.000(Ft.)
Downstream point elevation =   130.000(Ft.)
Channel length thru subarea  =   417.000(Ft.)
Channel base width      =    0.500(Ft.)
Slope or 'Z' of left channel bank =   2.000
Slope or 'Z' of right channel bank =   2.000
Manning's 'N'    = 0.018
Maximum depth of channel  =    1.000(Ft.)
Flow(q) thru subarea =      0.043(CFS)
Depth of flow =   0.027(Ft.), Average velocity =   2.917(Ft/s)
Channel flow top width =    0.607(Ft.)
Flow Velocity =    2.92(Ft/s)
Travel time  =    2.38 min.
Time of concentration =    9.39 min.
Critical depth =      0.057(Ft.)


++++++++++++++++++++++++++++++++++++++++++++++++++++++++++++++++++++++
```

```
Process from Point/Station      639.000 to Point/Station      640.000
**** IMPROVED CHANNEL TRAVEL TIME ****
_____________________________________________________________________
Upstream point elevation =   130.000(Ft.)
Downstream point elevation =   110.000(Ft.)
Channel length thru subarea  =    50.000(Ft.)
Channel base width      =    0.500(Ft.)
Slope or 'Z' of left channel bank =   2.000
Slope or 'Z' of right channel bank =   2.000
Manning's 'N'    = 0.018
Maximum depth of channel  =    1.000(Ft.)
Flow(q) thru subarea =      0.043(CFS)
Depth of flow =   0.021(Ft.), Average velocity =   3.753(Ft/s)
Channel flow top width =    0.585(Ft.)
Flow Velocity =    3.75(Ft/s)
Travel time  =    0.22 min.
Time of concentration =    9.61 min.
Critical depth =      0.057(Ft.)


++++++++++++++++++++++++++++++++++++++++++++++++++++++++++++++++++++++
Process from Point/Station      640.000 to Point/Station      641.000
**** IMPROVED CHANNEL TRAVEL TIME ****
_____________________________________________________________________
Upstream point elevation =   110.000(Ft.)
Downstream point elevation =   106.000(Ft.)
Channel length thru subarea  =    62.000(Ft.)
Channel base width      =    0.500(Ft.)
Slope or 'Z' of left channel bank =   2.000
Slope or 'Z' of right channel bank =   2.000
Estimated mean flow rate at midpoint of channel =      0.885(CFS)
Manning's 'N'    = 0.018
Maximum depth of channel  =    1.000(Ft.)
Flow(q) thru subarea =      0.885(CFS)
Depth of flow =   0.191(Ft.), Average velocity =   5.233(Ft/s)
Channel flow top width =    1.266(Ft.)
Flow Velocity =    5.23(Ft/s)
Travel time  =    0.20 min.
Time of concentration =    9.81 min.
Critical depth =      0.311(Ft.)
 Adding area flow to channel
Decimal fraction soil group A = 0.000
Decimal fraction soil group B = 0.000
Decimal fraction soil group C = 0.000
Decimal fraction soil group D = 1.000
[UNDISTURBED NATURAL TERRAIN                    ]
(Permanent Open Space   )
Impervious value, Ai = 0.000
Sub-Area C Value = 0.350
Rainfall intensity =      4.946(In/Hr) for a   100.0 year storm
Effective runoff coefficient used for total area
(Q=KCIA) is C = 0.350  CA =      0.329
Subarea runoff =      1.584(CFS) for      0.920(Ac.)
Total runoff =      1.627(CFS)      Total area =      0.940(Ac.)
Depth of flow =   0.259(Ft.), Average velocity =   6.159(Ft/s)
Critical depth =      0.422(Ft.)
```

```
++++++++++++++++++++++++++++++++++++++++++++++++++++++++++++++++++++++
Process from Point/Station      641.000 to Point/Station      646.000
**** PIPEFLOW TRAVEL TIME (Program estimated size) ****
______________________________________________________________________
Upstream point/station elevation =   106.000(Ft.)
Downstream point/station elevation =   102.500(Ft.)
Pipe length  =    50.00(Ft.)   Manning's N = 0.013
No. of pipes = 1  Required pipe flow  =     1.627(CFS)
Nearest computed pipe diameter  =      9.00(In.)
Calculated individual pipe flow  =     1.627(CFS)
Normal flow depth in pipe =    3.80(In.)
Flow top width inside pipe =    8.89(In.)
Critical Depth =    7.04(In.)
Pipe flow velocity =      9.18(Ft/s)
Travel time through pipe =    0.09 min.
Time of concentration (TC) =     9.90 min.


++++++++++++++++++++++++++++++++++++++++++++++++++++++++++++++++++++++
Process from Point/Station      641.000 to Point/Station      646.000
**** CONFLUENCE OF MINOR STREAMS ****
______________________________________________________________________
Along Main Stream number: 1 in normal stream number 2
Stream flow area =      0.940(Ac.)
Runoff from this stream =      1.627(CFS)
Time of concentration =    9.90 min.
Rainfall intensity =     4.917(In/Hr)
Summary of stream data:

Stream   Flow rate      TC            Rainfall Intensity
 No.       (CFS)       (min)                 (In/Hr)


1      205.956      8.92               5.260
2        1.627      9.90               4.917
Qmax(1) =
         1.000 *    1.000 *   205.956) +
         1.000 *    0.901 *     1.627) + =     207.422
Qmax(2) =
         0.935 *    1.000 *   205.956) +
         1.000 *    1.000 *     1.627) + =     194.171

Total of 2 streams to confluence:
Flow rates before confluence point:
     205.956       1.627
Maximum flow rates at confluence using above data:
      207.422      194.171
Area of streams before confluence:
       79.840        0.940
Results of confluence:
Total flow rate =    207.422(CFS)
Time of concentration =     8.921 min.
Effective stream area after confluence =     80.780(Ac.)


++++++++++++++++++++++++++++++++++++++++++++++++++++++++++++++++++++++
```

```
Process from Point/Station       646.000 to Point/Station       632.000
**** PIPEFLOW TRAVEL TIME (Program estimated size) ****
------------------------------------------------------------------------
Upstream point/station elevation =   102.500(Ft.)
Downstream point/station elevation =    93.000(Ft.)
Pipe length  =   851.00(Ft.)   Manning's N = 0.013
No. of pipes = 1  Required pipe flow  =   207.422(CFS)
Nearest computed pipe diameter  =     54.00(In.)
Calculated individual pipe flow  =   207.422(CFS)
Normal flow depth in pipe =   44.16(In.)
Flow top width inside pipe =   41.70(In.)
Critical Depth =   48.98(In.)
Pipe flow velocity =     14.89(Ft/s)
Travel time through pipe =    0.95 min.
Time of concentration (TC) =     9.87 min.
End of computations, total study area =          80.780 (Ac.)
```

San Diego County Rational Hydrology Program

CIVILCADD/CIVILDESIGN Engineering Software,(c)1991-2004 Version 7.4

Rational method hydrology program based on
San Diego County Flood Control Division 2003 hydrology manual
Rational Hydrology Study Date: 02/27/12

---

2468 QUARRY CREEK
SYSTEM 700
PROPOSED CONDITIONS
FILE: S700P100

---

********* Hydrology Study Control Information **********

---

Program License Serial Number 4049

---

Rational hydrology study storm event year is 100.0
English (in-lb) input data Units used

Map data precipitation entered:
6 hour, precipitation(inches) = 2.900
24 hour precipitation(inches) = 5.100
P6/P24 = 56.9%
San Diego hydrology manual 'C' values used

++++++++++++++++++++++++++++++++++++++++++++++++++++++++++++++++++++++
Process from Point/Station 700.000 to Point/Station 702.000
**** INITIAL AREA EVALUATION ****

---

Decimal fraction soil group A = 0.000
Decimal fraction soil group B = 0.000
Decimal fraction soil group C = 0.000
Decimal fraction soil group D = 1.000
[INDUSTRIAL area type ]
(General Industrial )
Impervious value, Ai = 0.950
Sub-Area C Value = 0.870
Initial subarea total flow distance = 90.000(Ft.)
Highest elevation = 151.400(Ft.)
Lowest elevation = 150.000(Ft.)
Elevation difference = 1.400(Ft.) Slope = 1.556 %
INITIAL AREA TIME OF CONCENTRATION CALCULATIONS:
The maximum overland flow distance is 70.00 (Ft)
for the top area slope value of 1.56 %, in a development type of
General Industrial
In Accordance With Figure 3-3
Initial Area Time of Concentration = 2.99 minutes
TC = [1.8*(1.1-C)*distance(Ft.)^.5)/(% slope^(1/3)]
TC = [1.8*(1.1-0.8700)*( 70.000^.5)/( 1.556^(1/3)]= 2.99
The initial area total distance of 90.00 (Ft.) entered leaves a

```
remaining distance of   20.00 (Ft.)
Using Figure 3-4, the travel time for this distance is   0.39 minutes
for a distance of  20.00 (Ft.) and a slope of  1.56 %
with an elevation difference of   0.31(Ft.) from the end of the top area
Tt = [11.9*length(Mi)^3)/(elevation change(Ft.))]^.385 *60(min/hr)
 =    0.389 Minutes
Tt=[(11.9*0.0038^3)/(  0.31)]^.385=  0.39
Total initial area Ti =   2.99 minutes from Figure 3-3 formula plus
  0.39 minutes from the Figure 3-4 formula =   3.38 minutes
Calculated TC of    3.379 minutes is less than 5 minutes,
 resetting TC to 5.0 minutes for rainfall intensity calculations
Rainfall intensity (I) =      7.641(In/Hr) for a   100.0 year storm
Effective runoff coefficient used for area (Q=KCIA) is C = 0.870
Subarea runoff =      0.598(CFS)
Total initial stream area =        0.090(Ac.)


++++++++++++++++++++++++++++++++++++++++++++++++++++++++++++++++++++++
Process from Point/Station      702.000 to Point/Station      708.000
**** STREET FLOW TRAVEL TIME + SUBAREA FLOW ADDITION ****
______________________________________________________________________
Top of street segment elevation =   151.400(Ft.)
End of street segment elevation =   108.080(Ft.)
Length of street segment  =  1486.000(Ft.)
Height of curb above gutter flowline  =    6.0(In.)
Width of half street (curb to crown)  =  17.000(Ft.)
Distance from crown to crossfall grade break  =  10.000(Ft.)
Slope from gutter to grade break (v/hz) =   0.020
Slope from grade break to crown (v/hz)  =   0.020
Street flow is on [1] side(s) of the street
Distance from curb to property line  =  13.000(Ft.)
Slope from curb to property line (v/hz) =   0.020
Gutter width =   1.500(Ft.)
Gutter hike from flowline =  1.500(In.)
 Manning's N in gutter =  0.0150
 Manning's N from gutter to grade break =  0.0180
 Manning's N from grade break to crown =  0.0180
Estimated mean flow rate at midpoint of street =      4.164(CFS)
Depth of flow =   0.311(Ft.), Average velocity =   3.351(Ft/s)
Streetflow hydraulics at midpoint of street travel:
Halfstreet flow width =  10.824(Ft.)
Flow velocity =   3.35(Ft/s)
Travel time =    7.39 min.     TC =   10.77  min.
 Adding area flow to street
Decimal fraction soil group A = 0.000
Decimal fraction soil group B = 0.000
Decimal fraction soil group C = 0.000
Decimal fraction soil group D = 1.000
[INDUSTRIAL area type                        ]
(General Industrial       )
Impervious value, Ai = 0.950
Sub-Area C Value = 0.870
Rainfall intensity =      4.658(In/Hr) for a   100.0 year storm
Effective runoff coefficient used for total area
(Q=KCIA) is C = 0.870  CA =      1.679
Subarea runoff =      7.223(CFS) for      1.840(Ac.)
Total runoff =      7.821(CFS)      Total area =       1.930(Ac.)
```

```
Street flow at end of street =      7.821(CFS)
Half street flow at end of street =      7.821(CFS)
Depth of flow =   0.374(Ft.), Average velocity =   3.889(Ft/s)
Flow width (from curb towards crown)=  13.928(Ft.)


++++++++++++++++++++++++++++++++++++++++++++++++++++++++++++++++++++++
Process from Point/Station      704.000 to Point/Station      708.000
**** SUBAREA FLOW ADDITION ****
______________________________________________________________________
Decimal fraction soil group A = 0.000
Decimal fraction soil group B = 0.000
Decimal fraction soil group C = 0.000
Decimal fraction soil group D = 1.000
[UNDISTURBED NATURAL TERRAIN                    ]
(Permanent Open Space   )
Impervious value, Ai = 0.000
Sub-Area C Value = 0.350
Time of concentration =    10.77 min.
Rainfall intensity =      4.658(In/Hr) for a   100.0 year storm
Effective runoff coefficient used for total area
(Q=KCIA) is C = 0.659  CA =      2.141
Subarea runoff =      2.152(CFS) for      1.320(Ac.)
Total runoff =      9.973(CFS)      Total area =      3.250(Ac.)


++++++++++++++++++++++++++++++++++++++++++++++++++++++++++++++++++++++
Process from Point/Station      706.000 to Point/Station      708.000
**** SUBAREA FLOW ADDITION ****
______________________________________________________________________
Decimal fraction soil group A = 0.000
Decimal fraction soil group B = 0.000
Decimal fraction soil group C = 0.000
Decimal fraction soil group D = 1.000
[INDUSTRIAL area type                           ]
(General Industrial       )
Impervious value, Ai = 0.950
Sub-Area C Value = 0.870
Time of concentration =    10.77 min.
Rainfall intensity =      4.658(In/Hr) for a   100.0 year storm
Effective runoff coefficient used for total area
(Q=KCIA) is C = 0.715  CA =      3.159
Subarea runoff =      4.741(CFS) for      1.170(Ac.)
Total runoff =     14.714(CFS)      Total area =      4.420(Ac.)


++++++++++++++++++++++++++++++++++++++++++++++++++++++++++++++++++++++
Process from Point/Station      708.000 to Point/Station      711.000
**** PIPEFLOW TRAVEL TIME (Program estimated size) ****
______________________________________________________________________
Upstream point/station elevation =   104.500(Ft.)
Downstream point/station elevation =   104.000(Ft.)
Pipe length  =     8.00(Ft.)   Manning's N = 0.013
No. of pipes = 1  Required pipe flow  =    14.714(CFS)
Nearest computed pipe diameter  =     15.00(In.)
Calculated individual pipe flow  =    14.714(CFS)
Normal flow depth in pipe =   11.25(In.)
```

```
Flow top width inside pipe =   12.99(In.)
Critical depth could not be calculated.
Pipe flow velocity =     14.92(Ft/s)
Travel time through pipe =    0.01 min.
Time of concentration (TC) =    10.78 min.


++++++++++++++++++++++++++++++++++++++++++++++++++++++++++++++++++++++
Process from Point/Station      710.000 to Point/Station      711.000
**** SUBAREA FLOW ADDITION ****
______________________________________________________________________
Decimal fraction soil group A = 0.000
Decimal fraction soil group B = 0.000
Decimal fraction soil group C = 0.000
Decimal fraction soil group D = 1.000
[INDUSTRIAL area type                        ]
(General Industrial       )
Impervious value, Ai = 0.950
Sub-Area C Value = 0.870
Time of concentration =    10.78 min.
Rainfall intensity =      4.655(In/Hr) for a   100.0 year storm
Effective runoff coefficient used for total area
(Q=KCIA) is C = 0.752  CA =      4.377
Subarea runoff =      5.662(CFS) for      1.400(Ac.)
Total runoff =     20.377(CFS)      Total area =       5.820(Ac.)


++++++++++++++++++++++++++++++++++++++++++++++++++++++++++++++++++++++
Process from Point/Station      711.000 to Point/Station      713.000
**** PIPEFLOW TRAVEL TIME (Program estimated size) ****
______________________________________________________________________
Upstream point/station elevation =   104.000(Ft.)
Downstream point/station elevation =   101.000(Ft.)
Pipe length  =   247.00(Ft.)   Manning's N = 0.013
No. of pipes = 1  Required pipe flow  =    20.377(CFS)
Nearest computed pipe diameter  =     24.00(In.)
Calculated individual pipe flow  =    20.377(CFS)
Normal flow depth in pipe =   16.50(In.)
Flow top width inside pipe =   22.25(In.)
Critical Depth =   19.44(In.)
Pipe flow velocity =      8.85(Ft/s)
Travel time through pipe =    0.47 min.
Time of concentration (TC) =    11.24 min.


++++++++++++++++++++++++++++++++++++++++++++++++++++++++++++++++++++++
Process from Point/Station      711.000 to Point/Station      713.000
**** CONFLUENCE OF MINOR STREAMS ****
______________________________________________________________________
Along Main Stream number: 1 in normal stream number 1
Stream flow area =      5.820(Ac.)
Runoff from this stream =     20.377(CFS)
Time of concentration =   11.24 min.
Rainfall intensity =     4.530(In/Hr)


++++++++++++++++++++++++++++++++++++++++++++++++++++++++++++++++++++++
```

```
Process from Point/Station      712.000 to Point/Station      713.000
**** INITIAL AREA EVALUATION ****
____________________________________________________________________
Decimal fraction soil group A = 0.000
Decimal fraction soil group B = 0.000
Decimal fraction soil group C = 0.000
Decimal fraction soil group D = 1.000
[MEDIUM DENSITY RESIDENTIAL                    ]
(14.5 DU/A or Less      )
Impervious value, Ai = 0.500
Sub-Area C Value = 0.630
Initial subarea total flow distance  =  285.000(Ft.)
Highest elevation =  114.000(Ft.)
Lowest elevation =  110.000(Ft.)
Elevation difference =    4.000(Ft.) Slope =  1.404 %
INITIAL AREA TIME OF CONCENTRATION CALCULATIONS:
The maximum overland flow distance is 65.00 (Ft)
for the top area slope value of   1.40 %, in a development type of
 14.5 DU/A or Less
In Accordance With Figure 3-3
Initial Area Time of Concentration =   6.09 minutes
TC = [1.8*(1.1-C)*distance(Ft.)^.5)/(% slope^(1/3)]
TC = [1.8*(1.1-0.6300)*(  65.000^.5)/(   1.404^(1/3)]=   6.09
The initial area total distance of  285.00 (Ft.) entered leaves a
remaining distance of  220.00 (Ft.)
Using Figure 3-4, the travel time for this distance is   2.57 minutes
for a distance of 220.00 (Ft.) and a slope of  1.40 %
with an elevation difference of   3.09(Ft.) from the end of the top area
Tt = [11.9*length(Mi)^3)/(elevation change(Ft.))]^.385 *60(min/hr)
 =    2.568 Minutes
Tt=[(11.9*0.0417^3)/(  3.09)]^.385=  2.57
Total initial area Ti =   6.09 minutes from Figure 3-3 formula plus
  2.57 minutes from the Figure 3-4 formula =   8.66 minutes
Rainfall intensity (I) =      5.362(In/Hr) for a   100.0 year storm
Effective runoff coefficient used for area (Q=KCIA) is C = 0.630
Subarea runoff =      3.851(CFS)
Total initial stream area =        1.140(Ac.)


++++++++++++++++++++++++++++++++++++++++++++++++++++++++++++++++++++++
Process from Point/Station      712.000 to Point/Station      713.000
**** CONFLUENCE OF MINOR STREAMS ****
____________________________________________________________________
Along Main Stream number: 1 in normal stream number 2
Stream flow area =      1.140(Ac.)
Runoff from this stream =      3.851(CFS)
Time of concentration =    8.66 min.
Rainfall intensity =     5.362(In/Hr)
Summary of stream data:

Stream   Flow rate      TC            Rainfall Intensity
 No.       (CFS)       (min)                 (In/Hr)


1       20.377     11.24                 4.530
2        3.851      8.66                 5.362
Qmax(1) =
```

```
        1.000 *    1.000 *    20.377) +
        0.845 *    1.000 *     3.851) + =      23.630
Qmax(2) =
        1.000 *    0.770 *    20.377) +
        1.000 *    1.000 *     3.851) + =      19.542

Total of 2 streams to confluence:
Flow rates before confluence point:
      20.377       3.851
Maximum flow rates at confluence using above data:
       23.630       19.542
Area of streams before confluence:
        5.820        1.140
Results of confluence:
Total flow rate =     23.630(CFS)
Time of concentration =    11.244 min.
Effective stream area after confluence =      6.960(Ac.)


++++++++++++++++++++++++++++++++++++++++++++++++++++++++++++++++++++++
Process from Point/Station      713.000 to Point/Station      722.000
**** PIPEFLOW TRAVEL TIME (Program estimated size) ****
______________________________________________________________________
Upstream point/station elevation =   101.000(Ft.)
Downstream point/station elevation =    99.500(Ft.)
Pipe length  =    73.00(Ft.)   Manning's N = 0.013
No. of pipes = 1  Required pipe flow  =    23.630(CFS)
Nearest computed pipe diameter  =     24.00(In.)
Calculated individual pipe flow  =    23.630(CFS)
Normal flow depth in pipe =   15.21(In.)
Flow top width inside pipe =   23.12(In.)
Critical Depth =   20.68(In.)
Pipe flow velocity =     11.26(Ft/s)
Travel time through pipe =    0.11 min.
Time of concentration (TC) =    11.35 min.


++++++++++++++++++++++++++++++++++++++++++++++++++++++++++++++++++++++
Process from Point/Station      713.000 to Point/Station      722.000
**** CONFLUENCE OF MINOR STREAMS ****
______________________________________________________________________
Along Main Stream number: 1 in normal stream number 1
Stream flow area =      6.960(Ac.)
Runoff from this stream =     23.630(CFS)
Time of concentration =   11.35 min.
Rainfall intensity =     4.502(In/Hr)


++++++++++++++++++++++++++++++++++++++++++++++++++++++++++++++++++++++
Process from Point/Station      714.000 to Point/Station      716.000
**** INITIAL AREA EVALUATION ****
______________________________________________________________________
Decimal fraction soil group A = 0.000
Decimal fraction soil group B = 0.000
Decimal fraction soil group C = 0.000
Decimal fraction soil group D = 1.000
[INDUSTRIAL area type                        ]
```

```
(General Industrial        )
Impervious value, Ai = 0.950
Sub-Area C Value = 0.870
Initial subarea total flow distance  =   92.000(Ft.)
Highest elevation =  146.000(Ft.)
Lowest elevation =  144.000(Ft.)
Elevation difference =    2.000(Ft.) Slope =  2.174 %
INITIAL AREA TIME OF CONCENTRATION CALCULATIONS:
The maximum overland flow distance is 70.00 (Ft)
for the top area slope value of   2.17 %, in a development type of
 General Industrial
In Accordance With Figure 3-3
Initial Area Time of Concentration =   2.67 minutes
TC = [1.8*(1.1-C)*distance(Ft.)^.5)/(% slope^(1/3)]
TC = [1.8*(1.1-0.8700)*(  70.000^.5)/(   2.174^(1/3)]=   2.67
The initial area total distance of   92.00 (Ft.) entered leaves a
remaining distance of   22.00 (Ft.)
Using Figure 3-4, the travel time for this distance is   0.37 minutes
for a distance of  22.00 (Ft.) and a slope of  2.17 %
with an elevation difference of   0.48(Ft.) from the end of the top area
Tt = [11.9*length(Mi)^3)/(elevation change(Ft.))]^.385 *60(min/hr)
 =    0.368 Minutes
Tt=[(11.9*0.0042^3)/(  0.48)]^.385=  0.37
Total initial area Ti =   2.67 minutes from Figure 3-3 formula plus
  0.37 minutes from the Figure 3-4 formula =   3.04 minutes
Calculated TC of    3.042 minutes is less than 5 minutes,
 resetting TC to 5.0 minutes for rainfall intensity calculations
Rainfall intensity (I) =      7.641(In/Hr) for a   100.0 year storm
Effective runoff coefficient used for area (Q=KCIA) is C = 0.870
Subarea runoff =      0.598(CFS)
Total initial stream area =        0.090(Ac.)


++++++++++++++++++++++++++++++++++++++++++++++++++++++++++++++++++++++
Process from Point/Station      716.000 to Point/Station      720.000
**** STREET FLOW TRAVEL TIME + SUBAREA FLOW ADDITION ****
______________________________________________________________________
Top of street segment elevation =   144.000(Ft.)
End of street segment elevation =   107.500(Ft.)
Length of street segment  =  1190.000(Ft.)
Height of curb above gutter flowline  =    6.0(In.)
Width of half street (curb to crown)  =  20.000(Ft.)
Distance from crown to crossfall grade break  =  10.000(Ft.)
Slope from gutter to grade break (v/hz) =   0.020
Slope from grade break to crown (v/hz)  =   0.020
Street flow is on [1] side(s) of the street
Distance from curb to property line  =  10.000(Ft.)
Slope from curb to property line (v/hz) =   0.020
Gutter width =   1.500(Ft.)
Gutter hike from flowline =  1.500(In.)
 Manning's N in gutter =  0.0150
 Manning's N from gutter to grade break =  0.0180
 Manning's N from grade break to crown =  0.0180
Estimated mean flow rate at midpoint of street =      2.889(CFS)
Depth of flow =   0.279(Ft.), Average velocity =   3.141(Ft/s)
Streetflow hydraulics at midpoint of street travel:
Halfstreet flow width =   9.212(Ft.)
```

```
Flow velocity =   3.14(Ft/s)
Travel time =    6.32 min.     TC =    9.36  min.
 Adding area flow to street
Decimal fraction soil group A = 0.000
Decimal fraction soil group B = 0.000
Decimal fraction soil group C = 0.000
Decimal fraction soil group D = 1.000
[INDUSTRIAL area type                        ]
(General Industrial       )
Impervious value, Ai = 0.950
Sub-Area C Value = 0.870
Rainfall intensity =      5.100(In/Hr) for a   100.0 year storm
Effective runoff coefficient used for total area
(Q=KCIA) is C = 0.870  CA =      1.027
Subarea runoff =      4.637(CFS) for      1.090(Ac.)
Total runoff =      5.236(CFS)      Total area =       1.180(Ac.)
Street flow at end of street =      5.236(CFS)
Half street flow at end of street =      5.236(CFS)
Depth of flow =   0.330(Ft.), Average velocity =   3.605(Ft/s)
Flow width (from curb towards crown)=  11.752(Ft.)


++++++++++++++++++++++++++++++++++++++++++++++++++++++++++++++++++++++
Process from Point/Station      720.000 to Point/Station      723.000
**** PIPEFLOW TRAVEL TIME (Program estimated size) ****
______________________________________________________________________
Upstream point/station elevation =   102.000(Ft.)
Downstream point/station elevation =   100.000(Ft.)
Pipe length  =   232.00(Ft.)   Manning's N = 0.013
No. of pipes = 1  Required pipe flow  =     5.236(CFS)
Nearest computed pipe diameter  =     15.00(In.)
Calculated individual pipe flow  =     5.236(CFS)
Normal flow depth in pipe =   10.85(In.)
Flow top width inside pipe =   13.42(In.)
Critical Depth =   11.13(In.)
Pipe flow velocity =      5.51(Ft/s)
Travel time through pipe =    0.70 min.
Time of concentration (TC) =    10.06 min.


++++++++++++++++++++++++++++++++++++++++++++++++++++++++++++++++++++++
Process from Point/Station      723.000 to Point/Station      723.000
**** SUBAREA FLOW ADDITION ****
______________________________________________________________________
Decimal fraction soil group A = 0.000
Decimal fraction soil group B = 0.000
Decimal fraction soil group C = 0.000
Decimal fraction soil group D = 1.000
[INDUSTRIAL area type                        ]
(General Industrial       )
Impervious value, Ai = 0.950
Sub-Area C Value = 0.870
Time of concentration =    10.06 min.
Rainfall intensity =      4.868(In/Hr) for a   100.0 year storm
Effective runoff coefficient used for total area
(Q=KCIA) is C = 0.870  CA =      1.288
Subarea runoff =      1.032(CFS) for      0.300(Ac.)
```

```
Total runoff =      6.268(CFS)      Total area =       1.480(Ac.)


++++++++++++++++++++++++++++++++++++++++++++++++++++++++++++++++++++++
Process from Point/Station      724.000 to Point/Station      723.000
**** SUBAREA FLOW ADDITION ****
______________________________________________________________________
Decimal fraction soil group A = 0.000
Decimal fraction soil group B = 0.000
Decimal fraction soil group C = 0.000
Decimal fraction soil group D = 1.000
[INDUSTRIAL area type                        ]
(General Industrial       )
Impervious value, Ai = 0.950
Sub-Area C Value = 0.870
Time of concentration =    10.06 min.
Rainfall intensity =      4.868(In/Hr) for a   100.0 year storm
Effective runoff coefficient used for total area
(Q=KCIA) is C = 0.870  CA =      1.766
Subarea runoff =      2.329(CFS) for      0.550(Ac.)
Total runoff =      8.597(CFS)      Total area =       2.030(Ac.)


++++++++++++++++++++++++++++++++++++++++++++++++++++++++++++++++++++++
Process from Point/Station      723.000 to Point/Station      722.000
**** PIPEFLOW TRAVEL TIME (Program estimated size) ****
______________________________________________________________________
Upstream point/station elevation =   100.000(Ft.)
Downstream point/station elevation =    99.500(Ft.)
Pipe length  =    78.00(Ft.)   Manning's N = 0.013
No. of pipes = 1  Required pipe flow  =     8.597(CFS)
Nearest computed pipe diameter  =     21.00(In.)
Calculated individual pipe flow  =     8.597(CFS)
Normal flow depth in pipe =   12.67(In.)
Flow top width inside pipe =   20.55(In.)
Critical Depth =   13.08(In.)
Pipe flow velocity =      5.67(Ft/s)
Travel time through pipe =    0.23 min.
Time of concentration (TC) =    10.29 min.


++++++++++++++++++++++++++++++++++++++++++++++++++++++++++++++++++++++
Process from Point/Station      723.000 to Point/Station      722.000
**** CONFLUENCE OF MINOR STREAMS ****
______________________________________________________________________
Along Main Stream number: 1 in normal stream number 2
Stream flow area =      2.030(Ac.)
Runoff from this stream =      8.597(CFS)
Time of concentration =   10.29 min.
Rainfall intensity =     4.797(In/Hr)
Summary of stream data:

Stream   Flow rate      TC            Rainfall Intensity
 No.       (CFS)       (min)                (In/Hr)


1       23.630     11.35               4.502
```

```
2        8.597     10.29                4.797
Qmax(1) =
         1.000 *    1.000 *    23.630) +
         0.939 *    1.000 *     8.597) + =      31.698
Qmax(2) =
         1.000 *    0.906 *    23.630) +
         1.000 *    1.000 *     8.597) + =      30.013

Total of 2 streams to confluence:
Flow rates before confluence point:
      23.630       8.597
Maximum flow rates at confluence using above data:
       31.698       30.013
Area of streams before confluence:
        6.960        2.030
Results of confluence:
Total flow rate =     31.698(CFS)
Time of concentration =    11.352 min.
Effective stream area after confluence =      8.990(Ac.)


++++++++++++++++++++++++++++++++++++++++++++++++++++++++++++++++++++++
Process from Point/Station      722.000 to Point/Station      742.000
**** PIPEFLOW TRAVEL TIME (Program estimated size) ****
______________________________________________________________________
Upstream point/station elevation =    99.500(Ft.)
Downstream point/station elevation =    97.400(Ft.)
Pipe length  =   431.00(Ft.)   Manning's N = 0.013
No. of pipes = 1  Required pipe flow  =    31.698(CFS)
Nearest computed pipe diameter  =     33.00(In.)
Calculated individual pipe flow  =    31.698(CFS)
Normal flow depth in pipe =   23.55(In.)
Flow top width inside pipe =   29.83(In.)
Critical Depth =   22.48(In.)
Pipe flow velocity =      6.99(Ft/s)
Travel time through pipe =    1.03 min.
Time of concentration (TC) =    12.38 min.


++++++++++++++++++++++++++++++++++++++++++++++++++++++++++++++++++++++
Process from Point/Station      722.000 to Point/Station      742.000
**** CONFLUENCE OF MAIN STREAMS ****
______________________________________________________________________
The following data inside Main Stream is listed:
In Main Stream number: 1
Stream flow area =      8.990(Ac.)
Runoff from this stream =     31.698(CFS)
Time of concentration =   12.38 min.
Rainfall intensity =     4.258(In/Hr)
Program is now starting with Main Stream No. 2


++++++++++++++++++++++++++++++++++++++++++++++++++++++++++++++++++++++
Process from Point/Station      730.000 to Point/Station      732.000
**** INITIAL AREA EVALUATION ****
______________________________________________________________________
Decimal fraction soil group A = 0.000
```

```
Decimal fraction soil group B = 0.000
Decimal fraction soil group C = 0.000
Decimal fraction soil group D = 1.000
[INDUSTRIAL area type                        ]
(General Industrial       )
Impervious value, Ai = 0.950
Sub-Area C Value = 0.870
Initial subarea total flow distance  =   72.000(Ft.)
Highest elevation =  110.700(Ft.)
Lowest elevation =  109.700(Ft.)
Elevation difference =    1.000(Ft.) Slope =  1.389 %
INITIAL AREA TIME OF CONCENTRATION CALCULATIONS:
The maximum overland flow distance is 60.00 (Ft)
for the top area slope value of   1.39 %, in a development type of
 General Industrial
In Accordance With Figure 3-3
Initial Area Time of Concentration =   2.87 minutes
TC = [1.8*(1.1-C)*distance(Ft.)^.5)/(% slope^(1/3)]
TC = [1.8*(1.1-0.8700)*(  60.000^.5)/(   1.389^(1/3)]=   2.87
The initial area total distance of   72.00 (Ft.) entered leaves a
remaining distance of   12.00 (Ft.)
Using Figure 3-4, the travel time for this distance is   0.27 minutes
for a distance of  12.00 (Ft.) and a slope of  1.39 %
with an elevation difference of   0.17(Ft.) from the end of the top area
Tt = [11.9*length(Mi)^3)/(elevation change(Ft.))]^.385 *60(min/hr)
 =    0.275 Minutes
Tt=[(11.9*0.0023^3)/(  0.17)]^.385=  0.27
Total initial area Ti =   2.87 minutes from Figure 3-3 formula plus
  0.27 minutes from the Figure 3-4 formula =   3.15 minutes
Calculated TC of    3.149 minutes is less than 5 minutes,
 resetting TC to 5.0 minutes for rainfall intensity calculations
Rainfall intensity (I) =      7.641(In/Hr) for a   100.0 year storm
Effective runoff coefficient used for area (Q=KCIA) is C = 0.870
Subarea runoff =      0.465(CFS)
Total initial stream area =        0.070(Ac.)


++++++++++++++++++++++++++++++++++++++++++++++++++++++++++++++++++++++
Process from Point/Station      732.000 to Point/Station      736.000
**** STREET FLOW TRAVEL TIME + SUBAREA FLOW ADDITION ****
______________________________________________________________________
Top of street segment elevation =   109.700(Ft.)
End of street segment elevation =   105.100(Ft.)
Length of street segment  =   457.000(Ft.)
Height of curb above gutter flowline  =    6.0(In.)
Width of half street (curb to crown)  =  17.000(Ft.)
Distance from crown to crossfall grade break  =  10.000(Ft.)
Slope from gutter to grade break (v/hz) =   0.020
Slope from grade break to crown (v/hz)  =   0.020
Street flow is on [1] side(s) of the street
Distance from curb to property line  =  13.000(Ft.)
Slope from curb to property line (v/hz) =   0.020
Gutter width =   1.500(Ft.)
Gutter hike from flowline =  1.500(In.)
 Manning's N in gutter =  0.0150
 Manning's N from gutter to grade break =  0.0180
 Manning's N from grade break to crown =  0.0180
```

```
Estimated mean flow rate at midpoint of street =      2.150(CFS)
Depth of flow =   0.300(Ft.), Average velocity =   1.911(Ft/s)
Streetflow hydraulics at midpoint of street travel:
Halfstreet flow width =  10.267(Ft.)
Flow velocity =   1.91(Ft/s)
Travel time =    3.99 min.     TC =    7.14  min.
 Adding area flow to street
Decimal fraction soil group A = 0.000
Decimal fraction soil group B = 0.000
Decimal fraction soil group C = 0.000
Decimal fraction soil group D = 1.000
[INDUSTRIAL area type                        ]
(General Industrial       )
Impervious value, Ai = 0.950
Sub-Area C Value = 0.870
Rainfall intensity =      6.075(In/Hr) for a   100.0 year storm
Effective runoff coefficient used for total area
(Q=KCIA) is C = 0.870  CA =      0.644
Subarea runoff =      3.446(CFS) for      0.670(Ac.)
Total runoff =      3.911(CFS)      Total area =       0.740(Ac.)
Street flow at end of street =      3.911(CFS)
Half street flow at end of street =      3.911(CFS)
Depth of flow =   0.356(Ft.), Average velocity =   2.199(Ft/s)
Flow width (from curb towards crown)=  13.066(Ft.)


++++++++++++++++++++++++++++++++++++++++++++++++++++++++++++++++++++++
Process from Point/Station      732.000 to Point/Station      736.000
**** CONFLUENCE OF MINOR STREAMS ****
______________________________________________________________________
Along Main Stream number: 2 in normal stream number 1
Stream flow area =      0.740(Ac.)
Runoff from this stream =      3.911(CFS)
Time of concentration =    7.14 min.
Rainfall intensity =     6.075(In/Hr)


++++++++++++++++++++++++++++++++++++++++++++++++++++++++++++++++++++++
Process from Point/Station      744.000 to Point/Station      746.000
**** INITIAL AREA EVALUATION ****
______________________________________________________________________
Decimal fraction soil group A = 0.000
Decimal fraction soil group B = 0.000
Decimal fraction soil group C = 0.000
Decimal fraction soil group D = 1.000
[HIGH DENSITY RESIDENTIAL                    ]
(43.0 DU/A or Less      )
Impervious value, Ai = 0.800
Sub-Area C Value = 0.790
Initial subarea total flow distance  =   63.000(Ft.)
Highest elevation =  124.000(Ft.)
Lowest elevation =  123.000(Ft.)
Elevation difference =    1.000(Ft.) Slope =  1.587 %
INITIAL AREA TIME OF CONCENTRATION CALCULATIONS:
The maximum overland flow distance is 75.00 (Ft)
for the top area slope value of   1.59 %, in a development type of
 43.0 DU/A or Less
```

```
In Accordance With Figure 3-3
Initial Area Time of Concentration =   4.14 minutes
TC = [1.8*(1.1-C)*distance(Ft.)^.5)/(% slope^(1/3)]
TC = [1.8*(1.1-0.7900)*(  75.000^.5)/(   1.587^(1/3)]=   4.14
Calculated TC of    4.143 minutes is less than 5 minutes,
 resetting TC to 5.0 minutes for rainfall intensity calculations
Rainfall intensity (I) =      7.641(In/Hr) for a   100.0 year storm
Effective runoff coefficient used for area (Q=KCIA) is C = 0.790
Subarea runoff =      7.364(CFS)
Total initial stream area =        1.220(Ac.)


++++++++++++++++++++++++++++++++++++++++++++++++++++++++++++++++++++++
Process from Point/Station      746.000 to Point/Station      766.000
**** IMPROVED CHANNEL TRAVEL TIME ****
______________________________________________________________________
Upstream point elevation =   123.000(Ft.)
Downstream point elevation =   111.500(Ft.)
Channel length thru subarea  =   792.000(Ft.)
Channel base width      =   10.000(Ft.)
Slope or 'Z' of left channel bank =   5.000
Slope or 'Z' of right channel bank =   5.000
Estimated mean flow rate at midpoint of channel =     34.175(CFS)
Manning's 'N'    = 0.018
Maximum depth of channel  =    1.000(Ft.)
Flow(q) thru subarea =     34.175(CFS)
Depth of flow =   0.497(Ft.), Average velocity =   5.507(Ft/s)
Channel flow top width =   14.971(Ft.)
Flow Velocity =    5.51(Ft/s)
Travel time  =    2.40 min.
Time of concentration =    6.54 min.
Critical depth =      0.641(Ft.)
 Adding area flow to channel
Decimal fraction soil group A = 0.000
Decimal fraction soil group B = 0.000
Decimal fraction soil group C = 0.000
Decimal fraction soil group D = 1.000
[HIGH DENSITY RESIDENTIAL                    ]
(43.0 DU/A or Less      )
Impervious value, Ai = 0.800
Sub-Area C Value = 0.790
Rainfall intensity =      6.426(In/Hr) for a   100.0 year storm
Effective runoff coefficient used for total area
(Q=KCIA) is C = 0.790  CA =      9.480
Subarea runoff =     53.552(CFS) for     10.780(Ac.)
Total runoff =     60.916(CFS)      Total area =      12.000(Ac.)
Depth of flow =   0.686(Ft.), Average velocity =   6.613(Ft/s)
Critical depth =      0.898(Ft.)


++++++++++++++++++++++++++++++++++++++++++++++++++++++++++++++++++++++
Process from Point/Station      766.000 to Point/Station      736.000
**** PIPEFLOW TRAVEL TIME (Program estimated size) ****
______________________________________________________________________
Upstream point/station elevation =   105.500(Ft.)
Downstream point/station elevation =    98.400(Ft.)
Pipe length  =    81.00(Ft.)   Manning's N = 0.013
```

```
No. of pipes = 1  Required pipe flow  =    60.916(CFS)
Nearest computed pipe diameter  =     24.00(In.)
Calculated individual pipe flow  =    60.916(CFS)
Normal flow depth in pipe =   17.95(In.)
Flow top width inside pipe =   20.84(In.)
Critical depth could not be calculated.
Pipe flow velocity =     24.16(Ft/s)
Travel time through pipe =    0.06 min.
Time of concentration (TC) =     6.60 min.


++++++++++++++++++++++++++++++++++++++++++++++++++++++++++++++++++++++
Process from Point/Station      766.000 to Point/Station      736.000
**** CONFLUENCE OF MINOR STREAMS ****
______________________________________________________________________
Along Main Stream number: 2 in normal stream number 2
Stream flow area =     12.000(Ac.)
Runoff from this stream =     60.916(CFS)
Time of concentration =    6.60 min.
Rainfall intensity =     6.391(In/Hr)
Summary of stream data:

Stream   Flow rate      TC            Rainfall Intensity
 No.       (CFS)       (min)                 (In/Hr)


1        3.911      7.14               6.075
2       60.916      6.60               6.391
Qmax(1) =
         1.000 *    1.000 *     3.911) +
         0.951 *    1.000 *    60.916) + =      61.816
Qmax(2) =
         1.000 *    0.924 *     3.911) +
         1.000 *    1.000 *    60.916) + =      64.531

Total of 2 streams to confluence:
Flow rates before confluence point:
       3.911      60.916
Maximum flow rates at confluence using above data:
       61.816       64.531
Area of streams before confluence:
        0.740       12.000
Results of confluence:
Total flow rate =     64.531(CFS)
Time of concentration =     6.596 min.
Effective stream area after confluence =     12.740(Ac.)


++++++++++++++++++++++++++++++++++++++++++++++++++++++++++++++++++++++
Process from Point/Station      736.000 to Point/Station      742.000
**** PIPEFLOW TRAVEL TIME (Program estimated size) ****
______________________________________________________________________
Upstream point/station elevation =    98.400(Ft.)
Downstream point/station elevation =    97.400(Ft.)
Pipe length  =    27.00(Ft.)   Manning's N = 0.013
No. of pipes = 1  Required pipe flow  =    64.531(CFS)
Nearest computed pipe diameter  =     30.00(In.)
```

```
Calculated individual pipe flow  =    64.531(CFS)
Normal flow depth in pipe =   20.63(In.)
Flow top width inside pipe =   27.81(In.)
Critical depth could not be calculated.
Pipe flow velocity =     17.93(Ft/s)
Travel time through pipe =    0.03 min.
Time of concentration (TC) =     6.62 min.


++++++++++++++++++++++++++++++++++++++++++++++++++++++++++++++++++++++
Process from Point/Station      736.000 to Point/Station      742.000
**** CONFLUENCE OF MAIN STREAMS ****
______________________________________________________________________
The following data inside Main Stream is listed:
In Main Stream number: 2
Stream flow area =     12.740(Ac.)
Runoff from this stream =     64.531(CFS)
Time of concentration =    6.62 min.
Rainfall intensity =     6.375(In/Hr)
Program is now starting with Main Stream No. 3


++++++++++++++++++++++++++++++++++++++++++++++++++++++++++++++++++++++
Process from Point/Station      738.000 to Point/Station      739.000
**** INITIAL AREA EVALUATION ****
______________________________________________________________________
Decimal fraction soil group A = 0.000
Decimal fraction soil group B = 0.000
Decimal fraction soil group C = 0.000
Decimal fraction soil group D = 1.000
[INDUSTRIAL area type                        ]
(General Industrial       )
Impervious value, Ai = 0.950
Sub-Area C Value = 0.870
Initial subarea total flow distance  =   72.000(Ft.)
Highest elevation =  110.700(Ft.)
Lowest elevation =  109.700(Ft.)
Elevation difference =    1.000(Ft.) Slope =  1.389 %
INITIAL AREA TIME OF CONCENTRATION CALCULATIONS:
The maximum overland flow distance is 60.00 (Ft)
for the top area slope value of   1.39 %, in a development type of
 General Industrial
In Accordance With Figure 3-3
Initial Area Time of Concentration =   2.87 minutes
TC = [1.8*(1.1-C)*distance(Ft.)^.5)/(% slope^(1/3)]
TC = [1.8*(1.1-0.8700)*(  60.000^.5)/(   1.390^(1/3)]=   2.87
The initial area total distance of   72.00 (Ft.) entered leaves a
remaining distance of   12.00 (Ft.)
Using Figure 3-4, the travel time for this distance is   0.27 minutes
for a distance of  12.00 (Ft.) and a slope of  1.39 %
with an elevation difference of   0.17(Ft.) from the end of the top area
Tt = [11.9*length(Mi)^3)/(elevation change(Ft.))]^.385 *60(min/hr)
 =    0.274 Minutes
Tt=[(11.9*0.0023^3)/(  0.17)]^.385=  0.27
Total initial area Ti =   2.87 minutes from Figure 3-3 formula plus
  0.27 minutes from the Figure 3-4 formula =   3.15 minutes
Calculated TC of    3.148 minutes is less than 5 minutes,
```

```
 resetting TC to 5.0 minutes for rainfall intensity calculations
Rainfall intensity (I) =      7.641(In/Hr) for a   100.0 year storm
Effective runoff coefficient used for area (Q=KCIA) is C = 0.870
Subarea runoff =      0.332(CFS)
Total initial stream area =        0.050(Ac.)


++++++++++++++++++++++++++++++++++++++++++++++++++++++++++++++++++++++
Process from Point/Station      739.000 to Point/Station      740.000
**** STREET FLOW TRAVEL TIME + SUBAREA FLOW ADDITION ****
______________________________________________________________________
Top of street segment elevation =   109.700(Ft.)
End of street segment elevation =   105.000(Ft.)
Length of street segment  =   477.000(Ft.)
Height of curb above gutter flowline  =    6.0(In.)
Width of half street (curb to crown)  =  17.000(Ft.)
Distance from crown to crossfall grade break  =  10.000(Ft.)
Slope from gutter to grade break (v/hz) =   0.020
Slope from grade break to crown (v/hz)  =   0.020
Street flow is on [1] side(s) of the street
Distance from curb to property line  =  13.000(Ft.)
Slope from curb to property line (v/hz) =   0.020
Gutter width =   1.500(Ft.)
Gutter hike from flowline =  1.500(In.)
 Manning's N in gutter =  0.0150
 Manning's N from gutter to grade break =  0.0180
 Manning's N from grade break to crown =  0.0180
Estimated mean flow rate at midpoint of street =      1.577(CFS)
Depth of flow =   0.276(Ft.), Average velocity =   1.765(Ft/s)
Streetflow hydraulics at midpoint of street travel:
Halfstreet flow width =   9.068(Ft.)
Flow velocity =   1.76(Ft/s)
Travel time =    4.50 min.     TC =    7.65  min.
 Adding area flow to street
Decimal fraction soil group A = 0.000
Decimal fraction soil group B = 0.000
Decimal fraction soil group C = 0.000
Decimal fraction soil group D = 1.000
[INDUSTRIAL area type                        ]
(General Industrial       )
Impervious value, Ai = 0.950
Sub-Area C Value = 0.870
Rainfall intensity =      5.807(In/Hr) for a   100.0 year storm
Effective runoff coefficient used for total area
(Q=KCIA) is C = 0.870  CA =      0.496
Subarea runoff =      2.547(CFS) for      0.520(Ac.)
Total runoff =      2.879(CFS)      Total area =       0.570(Ac.)
Street flow at end of street =      2.879(CFS)
Half street flow at end of street =      2.879(CFS)
Depth of flow =   0.327(Ft.), Average velocity =   2.029(Ft/s)
Flow width (from curb towards crown)=  11.611(Ft.)


++++++++++++++++++++++++++++++++++++++++++++++++++++++++++++++++++++++
Process from Point/Station      740.000 to Point/Station      742.000
**** PIPEFLOW TRAVEL TIME (Program estimated size) ****
______________________________________________________________________
```

```
Upstream point/station elevation =    98.000(Ft.)
Downstream point/station elevation =    97.400(Ft.)
Pipe length  =     3.00(Ft.)   Manning's N = 0.013
No. of pipes = 1  Required pipe flow  =     2.879(CFS)
Nearest computed pipe diameter  =      9.00(In.)
Calculated individual pipe flow  =     2.879(CFS)
Normal flow depth in pipe =    3.90(In.)
Flow top width inside pipe =    8.92(In.)
Critical depth could not be calculated.
Pipe flow velocity =     15.70(Ft/s)
Travel time through pipe =    0.00 min.
Time of concentration (TC) =     7.66 min.


++++++++++++++++++++++++++++++++++++++++++++++++++++++++++++++++++++++
Process from Point/Station      740.000 to Point/Station      742.000
**** CONFLUENCE OF MAIN STREAMS ****
______________________________________________________________________
The following data inside Main Stream is listed:
In Main Stream number: 3
Stream flow area =      0.570(Ac.)
Runoff from this stream =      2.879(CFS)
Time of concentration =    7.66 min.
Rainfall intensity =     5.805(In/Hr)
Summary of stream data:

Stream   Flow rate      TC            Rainfall Intensity
 No.       (CFS)       (min)                 (In/Hr)


1       31.698     12.38                4.258
2       64.531      6.62                6.375
3        2.879      7.66                5.805
Qmax(1) =
         1.000 *    1.000 *    31.698) +
         0.668 *    1.000 *    64.531) +
         0.733 *    1.000 *     2.879) + =      76.908
Qmax(2) =
         1.000 *    0.535 *    31.698) +
         1.000 *    1.000 *    64.531) +
         1.000 *    0.865 *     2.879) + =      83.974
Qmax(3) =
         1.000 *    0.618 *    31.698) +
         0.911 *    1.000 *    64.531) +
         1.000 *    1.000 *     2.879) + =      81.243

Total of 3 main streams to confluence:
Flow rates before confluence point:
      31.698      64.531       2.879
Maximum flow rates at confluence using above data:
       76.908       83.974       81.243
Area of streams before confluence:
        8.990       12.740        0.570


Results of confluence:
Total flow rate =     81.243(CFS)
```

```
Time of concentration =     7.656 min.
Effective stream area after confluence  =     22.300(Ac.)


++++++++++++++++++++++++++++++++++++++++++++++++++++++++++++++++++++++
Process from Point/Station      742.000 to Point/Station      786.000
**** PIPEFLOW TRAVEL TIME (Program estimated size) ****
______________________________________________________________________
Upstream point/station elevation =    97.400(Ft.)
Downstream point/station elevation =    97.000(Ft.)
Pipe length  =    45.00(Ft.)   Manning's N = 0.013
No. of pipes = 1  Required pipe flow  =    81.243(CFS)
Nearest computed pipe diameter  =     42.00(In.)
Calculated individual pipe flow  =    81.243(CFS)
Normal flow depth in pipe =   29.91(In.)
Flow top width inside pipe =   38.04(In.)
Critical Depth =   33.76(In.)
Pipe flow velocity =     11.08(Ft/s)
Travel time through pipe =    0.07 min.
Time of concentration (TC) =     7.72 min.


++++++++++++++++++++++++++++++++++++++++++++++++++++++++++++++++++++++
Process from Point/Station      742.000 to Point/Station      786.000
**** CONFLUENCE OF MAIN STREAMS ****
______________________________________________________________________
The following data inside Main Stream is listed:
In Main Stream number: 1
Stream flow area =     22.300(Ac.)
Runoff from this stream =     81.243(CFS)
Time of concentration =    7.72 min.
Rainfall intensity =     5.772(In/Hr)
Program is now starting with Main Stream No. 2


++++++++++++++++++++++++++++++++++++++++++++++++++++++++++++++++++++++
Process from Point/Station      770.000 to Point/Station      772.000
**** INITIAL AREA EVALUATION ****
______________________________________________________________________
Decimal fraction soil group A = 0.000
Decimal fraction soil group B = 0.000
Decimal fraction soil group C = 0.000
Decimal fraction soil group D = 1.000
[INDUSTRIAL area type                        ]
(General Industrial       )
Impervious value, Ai = 0.950
Sub-Area C Value = 0.870
Initial subarea total flow distance  =  108.000(Ft.)
Highest elevation =  130.700(Ft.)
Lowest elevation =  129.700(Ft.)
Elevation difference =    1.000(Ft.) Slope =  0.926 %
INITIAL AREA TIME OF CONCENTRATION CALCULATIONS:
The maximum overland flow distance is 60.00 (Ft)
for the top area slope value of   0.93 %, in a development type of
 General Industrial
In Accordance With Figure 3-3
Initial Area Time of Concentration =   3.29 minutes
```

```
TC = [1.8*(1.1-C)*distance(Ft.)^.5)/(% slope^(1/3)]
TC = [1.8*(1.1-0.8700)*(  60.000^.5)/(   0.926^(1/3)]=   3.29
The initial area total distance of  108.00 (Ft.) entered leaves a
remaining distance of   48.00 (Ft.)
Using Figure 3-4, the travel time for this distance is   0.93 minutes
for a distance of  48.00 (Ft.) and a slope of  0.93 %
with an elevation difference of   0.44(Ft.) from the end of the top area
Tt = [11.9*length(Mi)^3)/(elevation change(Ft.))]^.385 *60(min/hr)
 =    0.933 Minutes
Tt=[(11.9*0.0091^3)/(  0.44)]^.385=  0.93
Total initial area Ti =   3.29 minutes from Figure 3-3 formula plus
  0.93 minutes from the Figure 3-4 formula =   4.22 minutes
Calculated TC of    4.223 minutes is less than 5 minutes,
 resetting TC to 5.0 minutes for rainfall intensity calculations
Rainfall intensity (I) =      7.641(In/Hr) for a   100.0 year storm
Effective runoff coefficient used for area (Q=KCIA) is C = 0.870
Subarea runoff =      1.197(CFS)
Total initial stream area =        0.180(Ac.)


++++++++++++++++++++++++++++++++++++++++++++++++++++++++++++++++++++++
Process from Point/Station      772.000 to Point/Station      774.000
**** STREET FLOW TRAVEL TIME + SUBAREA FLOW ADDITION ****
______________________________________________________________________
Top of street segment elevation =   129.700(Ft.)
End of street segment elevation =   121.700(Ft.)
Length of street segment  =   520.000(Ft.)
Height of curb above gutter flowline  =    6.0(In.)
Width of half street (curb to crown)  =  17.000(Ft.)
Distance from crown to crossfall grade break  =   6.000(Ft.)
Slope from gutter to grade break (v/hz) =   0.020
Slope from grade break to crown (v/hz)  =   0.020
Street flow is on [1] side(s) of the street
Distance from curb to property line  =  13.000(Ft.)
Slope from curb to property line (v/hz) =   0.020
Gutter width =   1.500(Ft.)
Gutter hike from flowline =  1.500(In.)
 Manning's N in gutter =  0.0150
 Manning's N from gutter to grade break =  0.0180
 Manning's N from grade break to crown =  0.0180
Estimated mean flow rate at midpoint of street =      1.967(CFS)
Depth of flow =   0.276(Ft.), Average velocity =   2.204(Ft/s)
Streetflow hydraulics at midpoint of street travel:
Halfstreet flow width =   9.061(Ft.)
Flow velocity =   2.20(Ft/s)
Travel time =    3.93 min.     TC =    8.15  min.
 Adding area flow to street
Decimal fraction soil group A = 0.000
Decimal fraction soil group B = 0.000
Decimal fraction soil group C = 0.000
Decimal fraction soil group D = 1.000
[INDUSTRIAL area type                        ]
(General Industrial       )
Impervious value, Ai = 0.950
Sub-Area C Value = 0.870
Rainfall intensity =      5.573(In/Hr) for a   100.0 year storm
Effective runoff coefficient used for total area
```

```
(Q=KCIA) is C = 0.870  CA =      0.479
Subarea runoff =      1.470(CFS) for      0.370(Ac.)
Total runoff =      2.667(CFS)      Total area =       0.550(Ac.)
Street flow at end of street =      2.667(CFS)
Half street flow at end of street =      2.667(CFS)
Depth of flow =   0.301(Ft.), Average velocity =   2.364(Ft/s)
Flow width (from curb towards crown)=  10.281(Ft.)


++++++++++++++++++++++++++++++++++++++++++++++++++++++++++++++++++++++
Process from Point/Station      774.000 to Point/Station      778.000
**** PIPEFLOW TRAVEL TIME (Program estimated size) ****
______________________________________________________________________
Upstream point/station elevation =   115.700(Ft.)
Downstream point/station elevation =   115.400(Ft.)
Pipe length  =     3.25(Ft.)   Manning's N = 0.013
No. of pipes = 1  Required pipe flow  =     2.667(CFS)
Nearest computed pipe diameter  =      9.00(In.)
Calculated individual pipe flow  =     2.667(CFS)
Normal flow depth in pipe =    4.66(In.)
Flow top width inside pipe =    8.99(In.)
Critical Depth =    8.44(In.)
Pipe flow velocity =     11.55(Ft/s)
Travel time through pipe =    0.00 min.
Time of concentration (TC) =     8.16 min.


++++++++++++++++++++++++++++++++++++++++++++++++++++++++++++++++++++++
Process from Point/Station      776.000 to Point/Station      778.000
**** SUBAREA FLOW ADDITION ****
______________________________________________________________________
Decimal fraction soil group A = 0.000
Decimal fraction soil group B = 0.000
Decimal fraction soil group C = 0.000
Decimal fraction soil group D = 1.000
[INDUSTRIAL area type                        ]
(General Industrial       )
Impervious value, Ai = 0.950
Sub-Area C Value = 0.870
Time of concentration =     8.16 min.
Rainfall intensity =      5.571(In/Hr) for a   100.0 year storm
Effective runoff coefficient used for total area
(Q=KCIA) is C = 0.870  CA =      0.844
Subarea runoff =      2.035(CFS) for      0.420(Ac.)
Total runoff =      4.702(CFS)      Total area =       0.970(Ac.)


++++++++++++++++++++++++++++++++++++++++++++++++++++++++++++++++++++++
Process from Point/Station      778.000 to Point/Station      784.000
**** PIPEFLOW TRAVEL TIME (Program estimated size) ****
______________________________________________________________________
Upstream point/station elevation =   115.400(Ft.)
Downstream point/station elevation =   104.500(Ft.)
Pipe length  =   907.70(Ft.)   Manning's N = 0.013
No. of pipes = 1  Required pipe flow  =     4.702(CFS)
Nearest computed pipe diameter  =     15.00(In.)
Calculated individual pipe flow  =     4.702(CFS)
```

```
Normal flow depth in pipe =    8.93(In.)
Flow top width inside pipe =   14.72(In.)
Critical Depth =   10.55(In.)
Pipe flow velocity =      6.17(Ft/s)
Travel time through pipe =    2.45 min.
Time of concentration (TC) =    10.61 min.


++++++++++++++++++++++++++++++++++++++++++++++++++++++++++++++++++++++
Process from Point/Station      780.000 to Point/Station      784.000
**** SUBAREA FLOW ADDITION ****
______________________________________________________________________
Decimal fraction soil group A = 0.000
Decimal fraction soil group B = 0.000
Decimal fraction soil group C = 0.000
Decimal fraction soil group D = 1.000
[INDUSTRIAL area type                        ]
(General Industrial       )
Impervious value, Ai = 0.950
Sub-Area C Value = 0.870
Time of concentration =    10.61 min.
Rainfall intensity =      4.703(In/Hr) for a   100.0 year storm
Effective runoff coefficient used for total area
(Q=KCIA) is C = 0.870  CA =      1.479
Subarea runoff =      2.254(CFS) for      0.730(Ac.)
Total runoff =      6.955(CFS)      Total area =       1.700(Ac.)


++++++++++++++++++++++++++++++++++++++++++++++++++++++++++++++++++++++
Process from Point/Station      782.000 to Point/Station      784.000
**** SUBAREA FLOW ADDITION ****
______________________________________________________________________
Decimal fraction soil group A = 0.000
Decimal fraction soil group B = 0.000
Decimal fraction soil group C = 0.000
Decimal fraction soil group D = 1.000
[INDUSTRIAL area type                        ]
(General Industrial       )
Impervious value, Ai = 0.950
Sub-Area C Value = 0.870
Time of concentration =    10.61 min.
Rainfall intensity =      4.703(In/Hr) for a   100.0 year storm
Effective runoff coefficient used for total area
(Q=KCIA) is C = 0.870  CA =      2.201
Subarea runoff =      3.396(CFS) for      0.830(Ac.)
Total runoff =     10.351(CFS)      Total area =       2.530(Ac.)


++++++++++++++++++++++++++++++++++++++++++++++++++++++++++++++++++++++
Process from Point/Station      784.000 to Point/Station      786.000
**** PIPEFLOW TRAVEL TIME (Program estimated size) ****
______________________________________________________________________
Upstream point/station elevation =   104.500(Ft.)
Downstream point/station elevation =    97.000(Ft.)
Pipe length  =   506.00(Ft.)   Manning's N = 0.013
No. of pipes = 1  Required pipe flow  =    10.351(CFS)
Nearest computed pipe diameter  =     18.00(In.)
```

```
Calculated individual pipe flow  =    10.351(CFS)
Normal flow depth in pipe =   12.28(In.)
Flow top width inside pipe =   16.76(In.)
Critical Depth =   14.85(In.)
Pipe flow velocity =      8.06(Ft/s)
Travel time through pipe =    1.05 min.
Time of concentration (TC) =    11.66 min.


++++++++++++++++++++++++++++++++++++++++++++++++++++++++++++++++++++++
Process from Point/Station      784.000 to Point/Station      786.000
**** CONFLUENCE OF MAIN STREAMS ****
______________________________________________________________________
The following data inside Main Stream is listed:
In Main Stream number: 2
Stream flow area =      2.530(Ac.)
Runoff from this stream =     10.351(CFS)
Time of concentration =   11.66 min.
Rainfall intensity =     4.426(In/Hr)
Summary of stream data:

Stream   Flow rate      TC            Rainfall Intensity
 No.       (CFS)       (min)                 (In/Hr)


1       81.243      7.72                5.772
2       10.351     11.66                4.426
Qmax(1) =
         1.000 *    1.000 *    81.243) +
         1.000 *    0.662 *    10.351) + =      88.100
Qmax(2) =
         0.767 *    1.000 *    81.243) +
         1.000 *    1.000 *    10.351) + =      72.645

Total of 2 main streams to confluence:
Flow rates before confluence point:
      81.243      10.351
Maximum flow rates at confluence using above data:
       88.100       72.645
Area of streams before confluence:
       22.300        2.530


Results of confluence:
Total flow rate =     88.100(CFS)
Time of concentration =     7.723 min.
Effective stream area after confluence  =     24.830(Ac.)


++++++++++++++++++++++++++++++++++++++++++++++++++++++++++++++++++++++
Process from Point/Station      786.000 to Point/Station      788.000
**** PIPEFLOW TRAVEL TIME (Program estimated size) ****
______________________________________________________________________
Upstream point/station elevation =    97.000(Ft.)
Downstream point/station elevation =    96.500(Ft.)
Pipe length  =    42.00(Ft.)   Manning's N = 0.013
No. of pipes = 1  Required pipe flow  =    88.100(CFS)
```

```
Nearest computed pipe diameter  =     39.00(In.)
Calculated individual pipe flow  =    88.100(CFS)
Normal flow depth in pipe =   31.22(In.)
Flow top width inside pipe =   31.17(In.)
Critical Depth =   34.89(In.)
Pipe flow velocity =     12.38(Ft/s)
Travel time through pipe =    0.06 min.
Time of concentration (TC) =     7.78 min.


++++++++++++++++++++++++++++++++++++++++++++++++++++++++++++++++++++++
Process from Point/Station      786.000 to Point/Station      788.000
**** CONFLUENCE OF MINOR STREAMS ****
______________________________________________________________________
Along Main Stream number: 1 in normal stream number 1
Stream flow area =     24.830(Ac.)
Runoff from this stream =     88.100(CFS)
Time of concentration =    7.78 min.
Rainfall intensity =     5.745(In/Hr)


++++++++++++++++++++++++++++++++++++++++++++++++++++++++++++++++++++++
Process from Point/Station      787.000 to Point/Station      788.000
**** INITIAL AREA EVALUATION ****
______________________________________________________________________
Decimal fraction soil group A = 0.000
Decimal fraction soil group B = 0.000
Decimal fraction soil group C = 0.000
Decimal fraction soil group D = 1.000
[LOW DENSITY RESIDENTIAL                    ]
(1.0 DU/A or Less       )
Impervious value, Ai = 0.100
Sub-Area C Value = 0.410
Initial subarea total flow distance  =  180.000(Ft.)
Highest elevation =   98.000(Ft.)
Lowest elevation =   96.000(Ft.)
Elevation difference =    2.000(Ft.) Slope =  1.111 %
INITIAL AREA TIME OF CONCENTRATION CALCULATIONS:
The maximum overland flow distance is 70.00 (Ft)
for the top area slope value of   1.11 %, in a development type of
 1.0 DU/A or Less
In Accordance With Figure 3-3
Initial Area Time of Concentration =  10.04 minutes
TC = [1.8*(1.1-C)*distance(Ft.)^.5)/(% slope^(1/3)]
TC = [1.8*(1.1-0.4100)*(  70.000^.5)/(   1.110^(1/3)]=  10.04
The initial area total distance of  180.00 (Ft.) entered leaves a
remaining distance of  110.00 (Ft.)
Using Figure 3-4, the travel time for this distance is   1.65 minutes
for a distance of 110.00 (Ft.) and a slope of  1.11 %
with an elevation difference of   1.22(Ft.) from the end of the top area
Tt = [11.9*length(Mi)^3)/(elevation change(Ft.))]^.385 *60(min/hr)
 =    1.648 Minutes
Tt=[(11.9*0.0208^3)/(  1.22)]^.385=  1.65
Total initial area Ti =  10.04 minutes from Figure 3-3 formula plus
  1.65 minutes from the Figure 3-4 formula =  11.68 minutes
Rainfall intensity (I) =      4.419(In/Hr) for a   100.0 year storm
Effective runoff coefficient used for area (Q=KCIA) is C = 0.410
```

```
Subarea runoff =       3.153(CFS)
Total initial stream area =        1.740(Ac.)


++++++++++++++++++++++++++++++++++++++++++++++++++++++++++++++++++++++
Process from Point/Station      787.000 to Point/Station      788.000
**** CONFLUENCE OF MINOR STREAMS ****
______________________________________________________________________
Along Main Stream number: 1 in normal stream number 2
Stream flow area =       1.740(Ac.)
Runoff from this stream =       3.153(CFS)
Time of concentration =   11.68 min.
Rainfall intensity =     4.419(In/Hr)
Summary of stream data:

Stream   Flow rate      TC            Rainfall Intensity
 No.       (CFS)       (min)                 (In/Hr)


1       88.100      7.78                5.745
2        3.153     11.68                4.419
Qmax(1) =
         1.000 *    1.000 *    88.100) +
         1.000 *    0.666 *     3.153) + =      90.199
Qmax(2) =
         0.769 *    1.000 *    88.100) +
         1.000 *    1.000 *     3.153) + =      70.925

Total of 2 streams to confluence:
Flow rates before confluence point:
      88.100       3.153
Maximum flow rates at confluence using above data:
       90.199       70.925
Area of streams before confluence:
       24.830        1.740
Results of confluence:
Total flow rate =     90.199(CFS)
Time of concentration =     7.780 min.
Effective stream area after confluence =     26.570(Ac.)
End of computations, total study area =          26.570 (Ac.)
```

# APPENDIX 4

## Preliminary Energy Dissipation Calculations

# Table A-3

**Table A-3** Average Manning Roughness Coefficients for Small Open Channels Conveying Less than 50 cfs[4]

| | Design Flow Depth | | |
|---|---|---|---|
| **Lining Type** | **0 – 0.5 ft** | **0.5 – 2.0 ft** | **> 2.0 ft** |
| **Concrete (Poured)** | 0.015 | 0.013 | 0.013 |
| **Air Blown Concrete** | 0.023 | 0.019 | 0.016 |
| **Grouted Riprap** | 0.040 | 0.030 | 0.028 |
| **Stone Masonry** | 0.042 | 0.032 | 0.030 |
| **Soil Cement** | 0.025 | 0.022 | 0.020 |
| **Bare Soil** | 0.023 | 0.020 | 0.020 |
| **Rock Cut** | 0.045 | 0.035 | 0.025 |
| **Rock Riprap** | Based on Rock Size (See Section 5.7.2) | | |

# Table A-4

**Table A-4** Average Manning Roughness Coefficients for Larger Open Channels

| | |
|---|---|
| **Unlined Channels** | |
| Clay Loam | 0.023 |
| Sand | 0.020 |
| **Lined Channels** | |
| Grass Lined (Well-Maintained) | 0.035 |
| Grass Lined (Not Maintained) | 0.045 |
| Wetland-Bottom Channels (New Channel) | 0.023 |
| Wetland-Bottom Channels (Mature Channel) | See Table A-5 |
| Riprap-Lined Channels | See Section 5.7.2 |
| Concrete (Poured) | 0.014 |
| Air Blown Mortar (Gunite or Shotcrete)[5] | 0.016 |
| Asphaltic Concrete or Bituminous Plant Mix | 0.018 |

*For channels with revetments or multiple lining types, use composite Manning roughness coefficient based on component lining materials.*

[4] Based on materials and workmanship required by standard specifications.
[5] For air-blown concrete, use $n$=0.012 (if troweled) and $n$=0.025 if purposely roughened.

### 5.7.1 Longitudinal Channel Slope

The longitudinal slope of riprap-lined channels shall be dictated by maximum permissible velocity requirements. Table 5-2 summarizes the maximum permissible velocity for standard riprap gradations. Where topography is steeper than desirable, drop structures may be used to maintain design velocities (see Section 5.12).

**Table 5-2** Channel Bottom Riprap Protection

| Design Velocity (ft/s) | Rock Gradation |
|---|---|
| 6-10 | No. 2 Backing |
| 10-12 | ¼ ton |
| 12-14 | ½ ton |
| 14-16 | 1 ton |
| 16-18 | 2 ton |
| > 18 | Special Design |

### 5.7.2 Roughness Coefficients

The Manning roughness coefficient (n) for hydraulic computations shall be estimated for loose rock riprap using the Manning-Strickler equation (Equation 5-5). Equation 5-5 (Chang, 1992) does not apply to grouted rock riprap or to very shallow flow. Table 5-3 provides Manning roughness coefficients for standard rock riprap classifications based on the Manning-Strickler method.

$$n = 0.0395 d_{50}^{1/6} \qquad (5\text{-}5)$$

where ...

$n$ = Manning roughness coefficient (dimensionless); and

$d_{50}$ = median stone diameter (feet).

**Table 5-3** Standard Rock Riprap Gradations

| Rock Gradation [a] | Median Stone Weight ($W_{50}$) [c] | Median Stone Diameter ($d_{50}$) [d] | Manning n (Ungrouted) [e] |
|---|---|---|---|
| **No. 3 Backing** | 5 lb | 0.4 ft | 0.034 |
| **No. 2 Backing** | 25 lb | 0.7 ft | 0.037 |
| **No. 1 Backing** [b] | 75 lb | 1.0 ft | 0.039 |
| **Light** | 200 lb | 1.3 ft | 0.041 |
| **¼ Ton** | 500 lb | 1.8 ft | 0.044 |
| **½ Ton** | 1000 lb | 2.3 ft | 0.045 * |
| **1 Ton** | 2000 lb | 2.9 ft | 0.047 |
| **2 Ton** | 4000 lb | 3.6 ft | 0.049 |

*(a) Except for 2 ton rock, classification is based upon Caltrans Method B Placement, which allows dumping of the rock and spreading by mechanical equipment. Local surface irregularities shall not vary from the planned grade by more than 1 foot, measured perpendicular to the slope. Two-ton rock requires special placement, see Caltrans (2002) or Greenbook for more information. (b) No. 1 Backing has same gradation as Facing Riprap. (c) per Caltrans (2002). (d) Assumes specific weight of 165 lb/ft3. The designer shall take care to apply a unit weight that is applicable to the type of riprap specified for the project, and adjust their calculations when necessary. (e) Based on Manning-Strickler relationship (Chang, 1988).*

Program Package Serial Number: 1355

WATER SURFACE PROFILE LISTING Date: 2-28-2012 Time: 5:22: 2

2468 QUARRY CREEK
LINE 1 PER DWG 470-5A
PROPOSED Q

| Station / L/Elem | Invert Elev / Ch Slope | Depth (FT) | Water Elev | Q (CFS) | Vel (FPS) | Vel Head / SF Ave | Energy Grd.El. / HF | Super Elev / SE Dpth | Critical Depth / Froude N | Flow Top Width / Norm Dp | Height/ Dia.-FT / "N" | Base Wt or I.D. / X-Fall | ZL / ZR | No Wth Prs/Pip / Type Ch |
|---|---|---|---|---|---|---|---|---|---|---|---|---|---|---|
| 70.140 | 84.850 | 2.128 | 86.978 | 210.00 | 9.50 | 1.40 | 88.38 | .00 | 2.56 | 16.77 | 1.000 | 4.000 | 3.00 | 0 .0 |
| .288 | .0018 | | | | | .0614 | .02 | 2.13 | 1.46 | 4.60 | .045 | .00 | 3.00 | TRAP |
| 70.428 | 84.851 | 2.113 | 86.963 | 210.00 | 9.61 | 1.43 | 88.40 | .00 | 2.56 | 16.68 | 1.000 | 4.000 | 3.00 | 0 .0 |
| 1.262 | .0018 | | | | | .0667 | .08 | 2.11 | 1.48 | 4.60 | .045 | .00 | 3.00 | TRAP |
| 71.689 | 84.853 | 2.051 | 86.904 | 210.00 | 10.08 | 1.58 | 88.48 | .00 | 2.56 | 16.31 | 1.000 | 4.000 | 3.00 | 0 .0 |
| 1.320 | .0018 | | | | | .0758 | .10 | 2.05 | 1.57 | 4.60 | .045 | .00 | 3.00 | TRAP |
| 73.010 | 84.855 | 1.991 | 86.846 | 210.00 | 10.57 | 1.74 | 88.58 | .00 | 2.56 | 15.95 | 1.000 | 4.000 | 3.00 | 0 .0 |
| 1.362 | .0018 | | | | | .0862 | .12 | 1.99 | 1.67 | 4.60 | .045 | .00 | 3.00 | TRAP |
| 74.372 | 84.858 | 1.933 | 86.790 | 210.00 | 11.09 | 1.91 | 88.70 | .00 | 2.56 | 15.60 | 1.000 | 4.000 | 3.00 | 0 .0 |
| 1.390 | .0018 | | | | | .0981 | .14 | 1.93 | 1.77 | 4.60 | .045 | .00 | 3.00 | TRAP |
| 75.762 | 84.860 | 1.875 | 86.736 | 210.00 | 11.63 | 2.10 | 88.84 | .00 | 2.56 | 15.25 | 1.000 | 4.000 | 3.00 | 0 .0 |
| 1.406 | .0018 | | | | | .1116 | .16 | 1.88 | 1.88 | 4.60 | .045 | .00 | 3.00 | TRAP |
| 77.168 | 84.863 | 1.820 | 86.682 | 210.00 | 12.20 | 2.31 | 88.99 | .00 | 2.56 | 14.92 | 1.000 | 4.000 | 3.00 | 0 .0 |
| 1.413 | .0018 | | | | | .1269 | .18 | 1.82 | 2.00 | 4.60 | .045 | .00 | 3.00 | TRAP |
| 78.581 | 84.865 | 1.765 | 86.631 | 210.00 | 12.80 | 2.54 | 89.17 | .00 | 2.56 | 14.59 | 1.000 | 4.000 | 3.00 | 0 .0 |
| 1.411 | .0018 | | | | | .1444 | .20 | 1.77 | 2.13 | 4.60 | .045 | .00 | 3.00 | TRAP |
| 79.993 | 84.868 | 1.713 | 86.580 | 210.00 | 13.42 | 2.80 | 89.38 | .00 | 2.56 | 14.28 | 1.000 | 4.000 | 3.00 | 0 .0 |
| 1.403 | .0018 | | | | | .1643 | .23 | 1.71 | 2.26 | 4.60 | .045 | .00 | 3.00 | TRAP |

2468 QUARRY CREEK
LINE 1 PER DWG 470-5A
PROPOSED Q

| Station / L/Elem | Invert Elev / Ch Slope | Depth (FT) | Water Elev | Q (CFS) | Vel (FPS) | Vel Head / SF Ave | Energy Grd.El. / HF | Super Elev / SE Dpth | Critical Depth / Froude N | Flow Top Width / Norm Dp | Height/ Dia.-FT / "N" | Base Wt or I.D. / X-Fall | ZL / ZR | No Wth Prs/Pip / Type Ch |
|---|---|---|---|---|---|---|---|---|---|---|---|---|---|---|
| 81.396 | 84.870 | 1.661 | 86.531 | 210.00 | 14.07 | 3.08 | 89.61 | .00 | 2.56 | 13.97 | 1.000 | 4.000 | 3.00 | 0 .0 |
| 1.389 | .0018 | | | | | .1870 | .26 | 1.66 | 2.40 | 4.60 | .045 | .00 | 3.00 | TRAP |
| 82.785 | 84.873 | 1.611 | 86.483 | 210.00 | 14.76 | 3.38 | 89.87 | .00 | 2.56 | 13.66 | 1.000 | 4.000 | 3.00 | 0 .0 |
| 1.371 | .0018 | | | | | .2129 | .29 | 1.61 | 2.55 | 4.60 | .045 | .00 | 3.00 | TRAP |
| 84.156 | 84.875 | 1.562 | 86.437 | 210.00 | 15.48 | 3.72 | 90.16 | .00 | 2.56 | 13.37 | 1.000 | 4.000 | 3.00 | 0 .0 |
| 1.349 | .0018 | | | | | .2423 | .33 | 1.56 | 2.71 | 4.60 | .045 | .00 | 3.00 | TRAP |
| 85.505 | 84.878 | 1.514 | 86.392 | 210.00 | 16.24 | 4.09 | 90.49 | .00 | 2.56 | 13.08 | 1.000 | 4.000 | 3.00 | 0 .0 |
| 1.325 | .0018 | | | | | .2758 | .37 | 1.51 | 2.88 | 4.60 | .045 | .00 | 3.00 | TRAP |
| 86.830 | 84.880 | 1.468 | 86.348 | 210.00 | 17.03 | 4.50 | 90.85 | .00 | 2.56 | 12.81 | 1.000 | 4.000 | 3.00 | 0 .0 |
| .133 | .0080 | | | | | .2332 | .03 | 1.47 | 3.06 | 3.18 | .040 | .00 | 3.00 | TRAP |
| 86.963 | 84.881 | 1.464 | 86.345 | 210.00 | 17.09 | 4.54 | 90.88 | .00 | 2.56 | 12.78 | 1.000 | 4.000 | 3.00 | 0 .0 |
| 1.684 | .0080 | | | | | .2506 | .42 | 1.46 | 3.07 | 3.18 | .040 | .00 | 3.00 | TRAP |
| 88.647 | 84.895 | 1.419 | 86.313 | 210.00 | 17.93 | 4.99 | 91.30 | .00 | 2.56 | 12.51 | 1.000 | 4.000 | 3.00 | 0 .0 |
| 1.641 | .0080 | | | | | .2854 | .47 | 1.42 | 3.27 | 3.18 | .040 | .00 | 3.00 | TRAP |
| 90.287 | 84.908 | 1.375 | 86.282 | 210.00 | 18.80 | 5.49 | 91.77 | .00 | 2.56 | 12.25 | 1.000 | 4.000 | 3.00 | 0 .0 |
| 1.597 | .0080 | | | | | .3250 | .52 | 1.37 | 3.47 | 3.18 | .040 | .00 | 3.00 | TRAP |
| 91.884 | 84.920 | 1.332 | 86.252 | 210.00 | 19.72 | 6.04 | 92.29 | .00 | 2.56 | 11.99 | 1.000 | 4.000 | 3.00 | 0 .0 |
| 1.552 | .0080 | | | | | .3702 | .57 | 1.33 | 3.69 | 3.18 | .040 | .00 | 3.00 | TRAP |

2468 QUARRY CREEK
LINE 1 PER DWG 470-5A
PROPOSED Q

| Station / L/Elem | Invert Elev / Ch Slope | Depth (FT) | Water Elev | Q (CFS) | Vel (FPS) | Vel Head / SF Ave | Energy Grd.El. / HF | Super Elev / SE Dpth | Critical Depth / Froude N | Flow Top Width / Norm Dp | Height/ Dia.-FT / "N" | Base Wt or I.D. / X-Fall | ZL / ZR | No Wth Prs/Pip / Type Ch |
|---|---|---|---|---|---|---|---|---|---|---|---|---|---|---|
| 93.436 | 84.933 | 1.290 | 86.223 | 210.00 | 20.68 | 6.64 | 92.87 | .00 | 2.56 | 11.74 | 1.000 | 4.000 | 3.00 | 0 .0 |
| 1.508 | .0080 | | | | | .4217 | .64 | 1.29 | 3.92 | 3.18 | .040 | .00 | 3.00 | TRAP |
| 94.944 | 84.945 | 1.249 | 86.194 | 210.00 | 21.69 | 7.31 | 93.50 | .00 | 2.56 | 11.50 | 1.000 | 4.000 | 3.00 | 0 .0 |
| 1.463 | .0080 | | | | | .4804 | .70 | 1.25 | 4.17 | 3.18 | .040 | .00 | 3.00 | TRAP |
| 96.407 | 84.957 | 1.210 | 86.166 | 210.00 | 22.75 | 8.04 | 94.20 | .00 | 2.56 | 11.26 | 1.000 | 4.000 | 3.00 | 0 .0 |
| 1.419 | .0080 | | | | | .5475 | .78 | 1.21 | 4.43 | 3.18 | .040 | .00 | 3.00 | TRAP |
| 97.826 | 84.968 | 1.171 | 86.139 | 210.00 | 23.86 | 8.84 | 94.98 | .00 | 2.56 | 11.03 | 1.000 | 4.000 | 3.00 | 0 .0 |
| 1.375 | .0080 | | | | | .6239 | .86 | 1.17 | 4.71 | 3.18 | .040 | .00 | 3.00 | TRAP |
| 99.200 | 84.979 | 1.134 | 86.113 | 210.00 | 25.03 | 9.73 | 95.84 | .00 | 2.56 | 10.80 | 1.000 | 4.000 | 3.00 | 0 .0 |
| 1.331 | .0080 | | | | | .7112 | .95 | 1.13 | 5.00 | 3.18 | .040 | .00 | 3.00 | TRAP |
| 100.532 | 84.990 | 1.097 | 86.087 | 210.00 | 26.25 | 10.70 | 96.79 | .00 | 2.56 | 10.58 | 1.000 | 4.000 | 3.00 | 0 .0 |
| 1.288 | .0080 | | | | | .8108 | 1.04 | 1.10 | 5.32 | 3.18 | .040 | .00 | 3.00 | TRAP |
| 101.820 | 85.000 | 1.062 | 86.062 | 210.00 | 27.53 | 11.77 | 97.83 | .00 | 2.56 | 10.37 | 1.000 | 4.000 | 3.00 | 0 .0 |
| TRANS STR | 1.0000 | | | | | .6524 | .01 | 1.06 | 5.66 | | .040 | .00 | 3.00 | TRAP |
| 101.830 | 85.010 | 2.117 | 87.127 | 210.00 | 26.55 | 10.94 | 98.07 | .00 | 4.13 | 4.94 | 5.000 | .000 | .00 | 1 .0 |
| 28.029 | .0625 | | | | | .0450 | 1.26 | 2.12 | 3.70 | 1.95 | .013 | .00 | .00 | PIPE |
| 129.859 | 86.762 | 2.157 | 88.919 | 210.00 | 25.89 | 10.41 | 99.33 | .00 | 4.13 | 4.95 | 5.000 | .000 | .00 | 1 .0 |
| 40.068 | .0625 | | | | | .0409 | 1.64 | 2.16 | 3.57 | 1.95 | .013 | .00 | .00 | PIPE |

Velocity at pipe outlet

2468 QUARRY CREEK
LINE 1 PER DWG 470-5A
PROPOSED Q

| Station / L/Elem | Invert Elev / Ch Slope | Depth (FT) | Water Elev | Q (CFS) | Vel (FPS) | Vel Head / SF Ave | Energy Grd.El. / HF | Super Elev / SE Dpth | Critical Depth / Froude N | Flow Top Width / Norm Dp | Height/ Dia.-FT / "N" | Base Wt or I.D. / X-Fall | ZL / ZR | No Wth Prs/Pip / Type Ch |
|---|---|---|---|---|---|---|---|---|---|---|---|---|---|---|
| 169.927 | 89.266 | 2.237 | 91.504 | 210.00 | 24.69 | 9.47 | 100.97 | .00 | 4.13 | 4.97 | 5.000 | .000 | .00 | 1 .0 |
| 29.256 | .0625 | | | | | .0359 | 1.05 | 2.24 | 3.33 | 1.95 | .013 | .00 | .00 | PIPE |
| 199.184 | 91.095 | 2.320 | 93.415 | 210.00 | 23.54 | 8.61 | 102.02 | .00 | 4.13 | 4.99 | 5.000 | .000 | .00 | 1 .0 |
| 22.476 | .0625 | | | | | .0316 | .71 | 2.32 | 3.10 | 1.95 | .013 | .00 | .00 | PIPE |
| 221.660 | 92.500 | 2.408 | 94.908 | 210.00 | 22.45 | 7.82 | 102.73 | .00 | 4.13 | 5.00 | 5.000 | .000 | .00 | 1 .0 |
| JUNCT STR | .1250 | | | | | .0281 | .11 | 2.41 | 2.89 | | .013 | .00 | .00 | PIPE |
| 225.660 | 93.000 | 2.654 | 95.654 | 210.00 | 21.52 | 7.19 | 102.84 | .00 | 4.10 | 4.43 | 4.500 | .000 | .00 | 1 .0 |
| 52.324 | .0294 | | | | | .0262 | 1.37 | 2.65 | 2.55 | 2.57 | .013 | .00 | .00 | PIPE |
| 277.984 | 94.537 | 2.685 | 97.222 | 210.00 | 21.21 | 6.99 | 104.21 | .00 | 4.10 | 4.42 | 4.500 | .000 | .00 | 1 .0 |
| 101.880 | .0294 | | | | | .0242 | 2.47 | 2.69 | 2.50 | 2.57 | .013 | .00 | .00 | PIPE |
| 379.864 | 97.530 | 2.795 | 100.325 | 210.00 | 20.23 | 6.35 | 106.68 | .00 | 4.10 | 4.37 | 4.500 | .000 | .00 | 1 .0 |
| 58.223 | .0294 | | | | | .0215 | 1.25 | 2.80 | 2.31 | 2.57 | .013 | .00 | .00 | PIPE |
| 438.087 | 99.240 | 2.912 | 102.152 | 210.00 | 19.29 | 5.78 | 107.93 | .00 | 4.10 | 4.30 | 4.500 | .000 | .00 | 1 .0 |
| 38.788 | .0294 | | | | | .0191 | .74 | 2.91 | 2.14 | 2.57 | .013 | .00 | .00 | PIPE |
| 476.875 | 100.379 | 3.037 | 103.416 | 210.00 | 18.39 | 5.25 | 108.67 | .00 | 4.10 | 4.22 | 4.500 | .000 | .00 | 1 .0 |
| 27.742 | .0294 | | | | | .0170 | .47 | 3.04 | 1.97 | 2.57 | .013 | .00 | .00 | PIPE |
| 504.617 | 101.194 | 3.170 | 104.364 | 210.00 | 17.53 | 4.77 | 109.14 | .00 | 4.10 | 4.11 | 4.500 | .000 | .00 | 1 .0 |
| 20.300 | .0294 | | | | | .0151 | .31 | 3.17 | 1.81 | 2.57 | .013 | .00 | .00 | PIPE |

2468 QUARRY CREEK
LINE 1 PER DWG 470-5A
PROPOSED Q

| Station / L/Elem | Invert Elev / Ch Slope | Depth (FT) | Water Elev | Q (CFS) | Vel (FPS) | Vel Head / SF Ave | Energy Grd.El. / HF | Super Elev / SE Dpth | Critical Depth / Froude N | Flow Top Width / Norm Dp | Height/ Dia.-FT / "N" | Base Wt or I.D. / X-Fall | ZL / ZR | No Wth Prs/Pip Type Ch |
|---|---|---|---|---|---|---|---|---|---|---|---|---|---|---|
| 524.917 | 101.790 | 3.315 | 105.105 | 210.00 | 16.72 | 4.34 | 109.44 | .00 | 4.10 | 3.96 | 4.500 | .000 | .00 | 1 .0 |
| 14.902 | .0294 | | | | | .0136 | .20 | 3.32 | 1.65 | 2.57 | .013 | .00 | .00 | PIPE |
| 539.819 | 102.228 | 3.474 | 105.702 | 210.00 | 15.94 | 3.94 | 109.65 | .00 | 4.10 | 3.78 | 4.500 | .000 | .00 | 1 .0 |
| 10.655 | .0294 | | | | | .0122 | .13 | 3.47 | 1.50 | 2.57 | .013 | .00 | .00 | PIPE |
| 550.475 | 102.541 | 3.650 | 106.191 | 210.00 | 15.20 | 3.59 | 109.78 | .00 | 4.10 | 3.52 | 4.500 | .000 | .00 | 1 .0 |
| 6.851 | .0294 | | | | | .0111 | .08 | 3.65 | 1.35 | 2.57 | .013 | .00 | .00 | PIPE |
| 557.325 | 102.742 | 3.851 | 106.593 | 210.00 | 14.49 | 3.26 | 109.85 | .00 | 4.10 | 3.16 | 4.500 | .000 | .00 | 1 .0 |
| 2.645 | .0294 | | | | | .0103 | .03 | 3.85 | 1.19 | 2.57 | .013 | .00 | .00 | PIPE |
| WALL ENTRANCE | | | | | | | | | | | | | | |
| 559.970 | 102.820 | 4.099 | 106.919 | 210.00 | 13.81 | 2.96 | 109.88 | .00 | 4.10 | 2.56 | 4.500 | .000 | .00 | 0 .0 |
| HYDRAULIC JUMP | | | | | | | | | | | | | | |
| 559.970 | 102.820 | 4.098 | 106.918 | 210.00 | 13.81 | 2.96 | 109.88 | .00 | 4.10 | 2.57 | 4.500 | .000 | .00 | 1 .0 |

Program Package Serial Number: 1355

WATER SURFACE PROFILE LISTING Date:10- 2-2012 Time: 6:41:16

2468 QUARRY CREEK
LINE 3 PER DWG 470-5A
PROPOSED Q

Velocity @ end of riprap non-erosive

| Station / L/Elem | Invert Elev / Ch Slope | Depth (FT) | Water Elev | Q (CFS) | Vel (FPS) | Vel Head / SF Ave | Energy Grd.El. / HF | Super Elev / SE Dpth | Critical Depth / Froude N | Flow Top Width / Norm Dp | Height/ Dia.-FT / "N" | Base Wt or I.D. / X-Fall | ZL / ZR | No Wth Prs/Pip / Type Ch |
|---|---|---|---|---|---|---|---|---|---|---|---|---|---|---|
| 64.560 | 71.140 | 1.357 | 72.497 | 59.00 | 5.39 | .45 | 72.95 | .00 | 1.36 | 12.14 | 1.000 | 4.000 | 3.00 | 0 .0 |
| .099 | .0042 | | | | | .0301 | .00 | 1.36 | 1.00 | 2.19 | .045 | .00 | 3.00 | TRAP |
| 64.659 | 71.140 | 1.400 | 72.541 | 59.00 | 5.14 | .41 | 72.95 | .00 | 1.36 | 12.40 | 1.000 | 4.000 | 3.00 | 0 .0 |
| .336 | .0042 | | | | | .0264 | .01 | 1.40 | .94 | 2.19 | .045 | .00 | 3.00 | TRAP |
| 64.996 | 71.142 | 1.445 | 72.587 | 59.00 | 4.90 | .37 | 72.96 | .00 | 1.36 | 12.67 | 1.000 | 4.000 | 3.00 | 0 .0 |
| .634 | .0042 | | | | | .0232 | .01 | 1.45 | .89 | 2.19 | .045 | .00 | 3.00 | TRAP |
| 65.630 | 71.145 | 1.491 | 72.636 | 59.00 | 4.67 | .34 | 72.97 | .00 | 1.36 | 12.95 | 1.000 | 4.000 | 3.00 | 0 .0 |
| 1.011 | .0042 | | | | | .0204 | .02 | 1.49 | .83 | 2.19 | .045 | .00 | 3.00 | TRAP |
| 66.640 | 71.149 | 1.538 | 72.687 | 59.00 | 4.45 | .31 | 72.99 | .00 | 1.36 | 13.23 | 1.000 | 4.000 | 3.00 | 0 .0 |
| 1.489 | .0042 | | | | | .0179 | .03 | 1.54 | .78 | 2.19 | .045 | .00 | 3.00 | TRAP |
| 68.129 | 71.155 | 1.586 | 72.742 | 59.00 | 4.25 | .28 | 73.02 | .00 | 1.36 | 13.52 | 1.000 | 4.000 | 3.00 | 0 .0 |
| 2.102 | .0042 | | | | | .0157 | .03 | 1.59 | .74 | 2.19 | .045 | .00 | 3.00 | TRAP |
| 70.231 | 71.164 | 1.636 | 72.800 | 59.00 | 4.05 | .25 | 73.05 | .00 | 1.36 | 13.82 | 1.000 | 4.000 | 3.00 | 0 .0 |
| 2.260 | .0042 | | | | | .0141 | .03 | 1.64 | .69 | 2.19 | .045 | .00 | 3.00 | TRAP |
| 72.491 | 71.174 | 1.672 | 72.846 | 59.00 | 3.91 | .24 | 73.08 | .00 | 1.36 | 14.03 | 1.000 | 4.000 | 3.00 | 0 .0 |
| HYDRAULIC JUMP | | | | | | | | | | | | | | |
| 72.491 | 71.174 | 1.074 | 72.247 | 59.00 | 7.61 | .90 | 73.15 | .00 | 1.36 | 10.44 | 1.000 | 4.000 | 3.00 | 0 .0 |
| .164 | .0042 | | | | | .0837 | .01 | 1.07 | 1.56 | 2.19 | .045 | .00 | 3.00 | TRAP |

2468 QUARRY CREEK
LINE 3 PER DWG 470-5A
PROPOSED Q

| Station / L/Elem | Invert Elev / Ch Slope | Depth (FT) | Water Elev | Q (CFS) | Vel (FPS) | Vel Head / SF Ave | Energy Grd.El. / HF | Super Elev / SE Dpth | Critical Depth / Froude N | Flow Top Width / Norm Dp | Height/ Dia.-FT / "N" | Base Wt or I.D. / X-Fall | ZL / ZR | No Wth Prs/Pip / Type Ch |
|---|---|---|---|---|---|---|---|---|---|---|---|---|---|---|
| 72.655 | 71.174 | 1.066 | 72.240 | 59.00 | 7.69 | .92 | 73.16 | .00 | 1.36 | 10.40 | 1.000 | 4.000 | 3.00 | 0 .0 |
| .659 | .0042 | | | | | .0908 | .06 | 1.07 | 1.58 | 2.19 | .045 | .00 | 3.00 | TRAP |
| 73.314 | 71.177 | 1.031 | 72.208 | 59.00 | 8.06 | 1.01 | 73.22 | .00 | 1.36 | 10.19 | 1.000 | 4.000 | 3.00 | 0 .0 |
| .676 | .0042 | | | | | .1036 | .07 | 1.03 | 1.68 | 2.19 | .045 | .00 | 3.00 | TRAP |
| 73.991 | 71.180 | .998 | 72.178 | 59.00 | 8.46 | 1.11 | 73.29 | .00 | 1.36 | 9.99 | 1.000 | 4.000 | 3.00 | 0 .0 |
| .686 | .0042 | | | | | .1182 | .08 | 1.00 | 1.78 | 2.19 | .045 | .00 | 3.00 | TRAP |
| 74.677 | 71.183 | .965 | 72.148 | 59.00 | 8.87 | 1.22 | 73.37 | .00 | 1.36 | 9.79 | 1.000 | 4.000 | 3.00 | 0 .0 |
| .691 | .0042 | | | | | .1348 | .09 | .96 | 1.90 | 2.19 | .045 | .00 | 3.00 | TRAP |
| 75.368 | 71.186 | .933 | 72.119 | 59.00 | 9.30 | 1.34 | 73.46 | .00 | 1.36 | 9.60 | 1.000 | 4.000 | 3.00 | 0 .0 |
| .691 | .0042 | | | | | .1538 | .11 | .93 | 2.02 | 2.19 | .045 | .00 | 3.00 | TRAP |
| 76.059 | 71.189 | .902 | 72.090 | 59.00 | 9.76 | 1.48 | 73.57 | .00 | 1.36 | 9.41 | 1.000 | 4.000 | 3.00 | 0 .0 |
| .686 | .0042 | | | | | .1756 | .12 | .90 | 2.14 | 2.19 | .045 | .00 | 3.00 | TRAP |
| 76.745 | 71.192 | .872 | 72.063 | 59.00 | 10.23 | 1.63 | 73.69 | .00 | 1.36 | 9.23 | 1.000 | 4.000 | 3.00 | 0 .0 |
| .679 | .0042 | | | | | .2004 | .14 | .87 | 2.28 | 2.19 | .045 | .00 | 3.00 | TRAP |
| 77.424 | 71.194 | .842 | 72.037 | 59.00 | 10.73 | 1.79 | 73.83 | .00 | 1.36 | 9.05 | 1.000 | 4.000 | 3.00 | 0 .0 |
| .669 | .0042 | | | | | .2289 | .15 | .84 | 2.43 | 2.19 | .045 | .00 | 3.00 | TRAP |
| 78.093 | 71.197 | .814 | 72.011 | 59.00 | 11.26 | 1.97 | 73.98 | .00 | 1.36 | 8.88 | 1.000 | 4.000 | 3.00 | 0 .0 |
| .657 | .0042 | | | | | .2614 | .17 | .81 | 2.58 | 2.19 | .045 | .00 | 3.00 | TRAP |

ungrouted riprap

2468 QUARRY CREEK
LINE 3 PER DWG 470-5A
PROPOSED Q

| Station / L/Elem | Invert Elev / Ch Slope | Depth (FT) | Water Elev | Q (CFS) | Vel (FPS) | Vel Head / SF Ave | Energy Grd.El. / HF | Super Elev / SE Dpth | Critical Depth / Froude N | Flow Top Width / Norm Dp | Height/ Dia.-FT / "N" | Base Wt or I.D. / X-Fall | ZL / ZR | No Wth Prs/Pip / Type Ch |
|---|---|---|---|---|---|---|---|---|---|---|---|---|---|---|
| 78.750 | 71.200 | .786 | 71.986 | 59.00 | 11.81 | 2.16 | 74.15 | .00 | 1.36 | 8.72 | 1.000 | 4.000 | 3.00 | 0 .0 |
| .796 | .0050 | | | | | .2356 | .19 | .79 | 2.75 | 1.99 | .040 | .00 | 3.00 | TRAP |
| 79.546 | 71.204 | .760 | 71.964 | 59.00 | 12.37 | 2.37 | 74.34 | .00 | 1.36 | 8.56 | 1.000 | 4.000 | 3.00 | 0 .0 |
| .801 | .0050 | | | | | .2688 | .22 | .76 | 2.92 | 1.99 | .040 | .00 | 3.00 | TRAP |
| 80.347 | 71.208 | .734 | 71.942 | 59.00 | 12.97 | 2.61 | 74.55 | .00 | 1.36 | 8.40 | 1.000 | 4.000 | 3.00 | 0 .0 |
| .780 | .0050 | | | | | .3072 | .24 | .73 | 3.11 | 1.99 | .040 | .00 | 3.00 | TRAP |
| 81.128 | 71.212 | .708 | 71.920 | 59.00 | 13.60 | 2.87 | 74.79 | .00 | 1.36 | 8.25 | 1.000 | 4.000 | 3.00 | 0 .0 |
| .759 | .0050 | | | | | .3512 | .27 | .71 | 3.31 | 1.99 | .040 | .00 | 3.00 | TRAP |
| 81.886 | 71.216 | .683 | 71.899 | 59.00 | 14.27 | 3.16 | 75.06 | .00 | 1.36 | 8.10 | 1.000 | 4.000 | 3.00 | 0 .0 |
| .736 | .0050 | | | | | .4017 | .30 | .68 | 3.52 | 1.99 | .040 | .00 | 3.00 | TRAP |
| 82.623 | 71.219 | .660 | 71.879 | 59.00 | 14.96 | 3.48 | 75.36 | .00 | 1.36 | 7.96 | 1.000 | 4.000 | 3.00 | 0 .0 |
| .714 | .0050 | | | | | .4595 | .33 | .66 | 3.75 | 1.99 | .040 | .00 | 3.00 | TRAP |
| 83.336 | 71.223 | .636 | 71.859 | 59.00 | 15.69 | 3.82 | 75.68 | .00 | 1.36 | 7.82 | 1.000 | 4.000 | 3.00 | 0 .0 |
| .691 | .0050 | | | | | .5258 | .36 | .64 | 3.99 | 1.99 | .040 | .00 | 3.00 | TRAP |
| 84.027 | 71.226 | .614 | 71.840 | 59.00 | 16.46 | 4.21 | 76.05 | .00 | 1.36 | 7.68 | 1.000 | 4.000 | 3.00 | 0 .0 |
| .668 | .0050 | | | | | .6019 | .40 | .61 | 4.25 | 1.99 | .040 | .00 | 3.00 | TRAP |
| 84.695 | 71.230 | .592 | 71.822 | 59.00 | 17.26 | 4.63 | 76.45 | .00 | 1.36 | 7.55 | 1.000 | 4.000 | 3.00 | 0 .0 |
| .645 | .0050 | | | | | .6891 | .44 | .59 | 4.52 | 1.99 | .040 | .00 | 3.00 | TRAP |

2468 QUARRY CREEK
LINE 3 PER DWG 470-5A
PROPOSED Q

| Station / L/Elem | Invert Elev / Ch Slope | Depth (FT) | Water Elev | Q (CFS) | Vel (FPS) | Vel Head / SF Ave | Energy Grd.El. / HF | Super Elev / SE Dpth | Critical Depth / Froude N | Flow Top Width / Norm Dp | Height/ Dia.-FT / "N" | Base Wt or I.D. / X-Fall | ZL / ZR | No Wth Prs/Pip / Type Ch |
|---|---|---|---|---|---|---|---|---|---|---|---|---|---|---|
| 85.341 | 71.233 | .571 | 71.803 | 59.00 | 18.11 | 5.09 | 76.89 | .00 | 1.36 | 7.42 | 1.000 | 4.000 | 3.00 | 0 .0 |
| .623 | .0050 | | | | | .7892 | .49 | .57 | 4.82 | 1.99 | .040 | .00 | 3.00 | TRAP |
| 85.964 | 71.236 | .550 | 71.786 | 59.00 | 18.99 | 5.60 | 77.39 | .00 | 1.36 | 7.30 | 1.000 | 4.000 | 3.00 | 0 .0 |
| .600 | .0050 | | | | | .9042 | .54 | .55 | 5.13 | 1.99 | .040 | .00 | 3.00 | TRAP |
| 86.564 | 71.239 | .530 | 71.769 | 59.00 | 19.92 | 6.16 | 77.93 | .00 | 1.36 | 7.18 | 1.000 | 4.000 | 3.00 | 0 .0 |
| .578 | .0050 | | | | | 1.0363 | .60 | .53 | 5.46 | 1.99 | .040 | .00 | 3.00 | TRAP |
| WARNING: POSSIBLE ERROR IN CALCULATIONS, PROGRAM USES MANNINGS, EQUATION, AVERAGE FRICTION SLOPE = 1.03626 | | | | | | | | | | | | | | |
| 87.143 | 71.242 | .511 | 71.753 | 59.00 | 20.89 | 6.78 | 78.53 | .00 | 1.36 | 7.06 | 1.000 | 4.000 | 3.00 | 0 .0 |
| .557 | .0050 | | | | | 1.1880 | .66 | .51 | 5.82 | 1.99 | .040 | .00 | 3.00 | TRAP |
| WARNING: POSSIBLE ERROR IN CALCULATIONS, PROGRAM USES MANNINGS, EQUATION, AVERAGE FRICTION SLOPE = 1.18798 | | | | | | | | | | | | | | |
| 87.699 | 71.245 | .492 | 71.737 | 59.00 | 21.91 | 7.45 | 79.19 | .00 | 1.36 | 6.95 | 1.000 | 4.000 | 3.00 | 0 .0 |
| .536 | .0050 | | | | | 1.3624 | .73 | .49 | 6.20 | 1.99 | .040 | .00 | 3.00 | TRAP |
| WARNING: POSSIBLE ERROR IN CALCULATIONS, PROGRAM USES MANNINGS, EQUATION, AVERAGE FRICTION SLOPE = 1.36237 | | | | | | | | | | | | | | |
| 88.235 | 71.247 | .474 | 71.721 | 59.00 | 22.98 | 8.20 | 79.92 | .00 | 1.36 | 6.84 | 1.000 | 4.000 | 3.00 | 0 .0 |
| .515 | .0050 | | | | | 1.5629 | .80 | .47 | 6.61 | 1.99 | .040 | .00 | 3.00 | TRAP |
| WARNING: POSSIBLE ERROR IN CALCULATIONS, PROGRAM USES MANNINGS, EQUATION, AVERAGE FRICTION SLOPE = 1.56288 | | | | | | | | | | | | | | |
| 88.750 | 71.250 | .456 | 71.706 | 59.00 | 24.10 | 9.02 | 80.72 | .00 | 1.36 | 6.74 | 1.000 | 4.000 | 3.00 | 0 .0 |
| TRANS STR | 1.0000 | | | | | 1.2201 | .01 | .46 | 7.04 | | .040 | .00 | 3.00 | TRAP |
| WARNING: POSSIBLE ERROR IN CALCULATIONS, PROGRAM USES MANNINGS, EQUATION, AVERAGE FRICTION SLOPE = 1.22010 | | | | | | | | | | | | | | |
| 88.760 | 71.260 | 1.077 | 72.337 | 59.00 | 23.47 | 8.55 | 80.89 | .00 | 2.41 | 3.23 | 3.500 | .000 | .00 | 1 .0 |
| 1.559 | .0051 | | | | | .0822 | .13 | 1.08 | 4.69 | 2.41 | .013 | .00 | .00 | PIPE |

Velocity at pipe outlet

Change Pipe Grade

```
90.319    71.268    1.071    72.339     59.00   23.64    8.68    81.02     .00    2.41     3.23    3.500     .000   .00   1   .0
     -|-       -|-      -|-       -|-       -|-     -|-     -|-       -|-     -|-      -|-      -|-     -|-     -|-     |-
 9.929    .0051                                        .0889      .88     1.07    4.74    2.41    .013       .00   .00  PIPE
```

2468 QUARRY CREEK
LINE 3 PER DWG 470-5A
PROPOSED Q

| Station / L/Elem | Invert Elev / Ch Slope | Depth (FT) | Water Elev | Q (CFS) | Vel (FPS) | Vel Head / SF Ave | Energy Grd.El. / HF | Super Elev / SE Dpth | Critical Depth / Froude N | Flow Top Width / Norm Dp | Height/ Dia.-FT / "N" | Base Wt or I.D. / X-Fall | ZL / ZR | No Wth Prs/Pip / Type Ch |
|---|---|---|---|---|---|---|---|---|---|---|---|---|---|---|
| 100.248 | 71.319 | 1.035 | 72.354 | 59.00 | 24.79 | 9.54 | 81.90 | .00 | 2.41 | 3.19 | 3.500 | .000 | .00 | 1 .0 |
| 9.536 | .0051 | | | | | .1015 | .97 | 1.04 | 5.06 | 2.41 | .013 | .00 | .00 | PIPE |
| 109.784 | 71.368 | 1.000 | 72.368 | 59.00 | 26.00 | 10.50 | 82.87 | .00 | 2.41 | 3.16 | 3.500 | .000 | .00 | 1 .0 |
| 9.163 | .0051 | | | | | .1160 | 1.06 | 1.00 | 5.41 | 2.41 | .013 | .00 | .00 | PIPE |
| 118.947 | 71.415 | .966 | 72.381 | 59.00 | 27.27 | 11.55 | 83.93 | .00 | 2.41 | 3.13 | 3.500 | .000 | .00 | 1 .0 |
| 8.813 | .0051 | | | | | .1326 | 1.17 | .97 | 5.78 | 2.41 | .013 | .00 | .00 | PIPE |
| 127.760 | 71.460 | .934 | 72.394 | 59.00 | 28.60 | 12.70 | 85.10 | .00 | 2.41 | 3.10 | 3.500 | .000 | .00 | 1 .0 |
| 4.000 | .0825 | | | | | .1434 | .57 | .93 | 6.18 | 1.07 | .013 | .00 | .00 | PIPE |
| 131.760 | 71.790 | .928 | 72.718 | 59.00 | 28.89 | 12.96 | 85.67 | .00 | 2.41 | 3.09 | 3.500 | .000 | .00 | 1 .0 |
| 11.199 | .2367 | | | | | .1364 | 1.53 | .93 | 6.26 | .82 | .013 | .00 | .00 | PIPE |
| 142.959 | 74.440 | .959 | 75.400 | 59.00 | 27.56 | 11.79 | 87.19 | .00 | 2.41 | 3.12 | 3.500 | .000 | .00 | 1 .0 |
| 8.858 | .2367 | | | | | .1194 | 1.06 | .96 | 5.86 | .82 | .013 | .00 | .00 | PIPE |
| 151.817 | 76.537 | .992 | 77.529 | 59.00 | 26.27 | 10.72 | 88.25 | .00 | 2.41 | 3.15 | 3.500 | .000 | .00 | 1 .0 |
| 7.107 | .2367 | | | | | .1045 | .74 | .99 | 5.49 | .82 | .013 | .00 | .00 | PIPE |
| 158.925 | 78.219 | 1.027 | 79.246 | 59.00 | 25.05 | 9.74 | 88.99 | .00 | 2.41 | 3.19 | 3.500 | .000 | .00 | 1 .0 |
| 5.854 | .2367 | | | | | .0915 | .54 | 1.03 | 5.14 | .82 | .013 | .00 | .00 | PIPE |
| 164.778 | 79.604 | 1.063 | 80.667 | 59.00 | 23.88 | 8.86 | 89.53 | .00 | 2.41 | 3.22 | 3.500 | .000 | .00 | 1 .0 |
| 4.907 | .2367 | | | | | .0801 | .39 | 1.06 | 4.81 | .82 | .013 | .00 | .00 | PIPE |

2468 QUARRY CREEK
LINE 3 PER DWG 470-5A
PROPOSED Q

| Station / L/Elem | Invert Elev / Ch Slope | Depth (FT) | Water Elev | Q (CFS) | Vel (FPS) | Vel Head / SF Ave | Energy Grd.El. / HF | Super Elev / SE Dpth | Critical Depth / Froude N | Flow Top Width / Norm Dp | Height/ Dia.-FT / "N" | Base Wt or I.D. / X-Fall | ZL / ZR | No Wth Prs/Pip / Type Ch |
|---|---|---|---|---|---|---|---|---|---|---|---|---|---|---|
| 169.685 | 80.766 | 1.100 | 81.866 | 59.00 | 22.77 | 8.05 | 89.92 | .00 | 2.41 | 3.25 | 3.500 | .000 | .00 | 1 .0 |
| 4.162 | .2367 | | | | | .0701 | .29 | 1.10 | 4.49 | .82 | .013 | .00 | .00 | PIPE |
| 173.848 | 81.751 | 1.139 | 82.890 | 59.00 | 21.71 | 7.32 | 90.21 | .00 | 2.41 | 3.28 | 3.500 | .000 | .00 | 1 .0 |
| 3.570 | .2367 | | | | | .0614 | .22 | 1.14 | 4.20 | .82 | .013 | .00 | .00 | PIPE |
| 177.418 | 82.596 | 1.179 | 83.775 | 59.00 | 20.70 | 6.66 | 90.43 | .00 | 2.41 | 3.31 | 3.500 | .000 | .00 | 1 .0 |
| 3.080 | .2367 | | | | | .0538 | .17 | 1.18 | 3.93 | .82 | .013 | .00 | .00 | PIPE |
| 180.497 | 83.324 | 1.221 | 84.546 | 59.00 | 19.74 | 6.05 | 90.60 | .00 | 2.41 | 3.34 | 3.500 | .000 | .00 | 1 .0 |
| 2.676 | .2367 | | | | | .0472 | .13 | 1.22 | 3.68 | .82 | .013 | .00 | .00 | PIPE |
| 183.173 | 83.958 | 1.264 | 85.222 | 59.00 | 18.82 | 5.50 | 90.72 | .00 | 2.41 | 3.36 | 3.500 | .000 | .00 | 1 .0 |
| 2.325 | .2367 | | | | | .0414 | .10 | 1.26 | 3.44 | .82 | .013 | .00 | .00 | PIPE |
| 185.498 | 84.508 | 1.310 | 85.818 | 59.00 | 17.95 | 5.00 | 90.82 | .00 | 2.41 | 3.39 | 3.500 | .000 | .00 | 1 .0 |
| 2.034 | .2367 | | | | | .0363 | .07 | 1.31 | 3.21 | .82 | .013 | .00 | .00 | PIPE |
| 187.532 | 84.989 | 1.357 | 86.346 | 59.00 | 17.11 | 4.55 | 90.89 | .00 | 2.41 | 3.41 | 3.500 | .000 | .00 | 1 .0 |
| 1.778 | .2367 | | | | | .0318 | .06 | 1.36 | 3.00 | .82 | .013 | .00 | .00 | PIPE |
| 189.310 | 85.410 | 1.406 | 86.816 | 59.00 | 16.31 | 4.13 | 90.95 | .00 | 2.41 | 3.43 | 3.500 | .000 | .00 | 1 .0 |
| 1.556 | .2367 | | | | | .0279 | .04 | 1.41 | 2.80 | .82 | .013 | .00 | .00 | PIPE |
| 190.866 | 85.778 | 1.457 | 87.235 | 59.00 | 15.55 | 3.76 | 90.99 | .00 | 2.41 | 3.45 | 3.500 | .000 | .00 | 1 .0 |
| 1.355 | .2367 | | | | | .0245 | .03 | 1.46 | 2.61 | .82 | .013 | .00 | .00 | PIPE |

2468 QUARRY CREEK
LINE 3 PER DWG 470-5A
PROPOSED Q

| Station / L/Elem | Invert Elev / Ch Slope | Depth (FT) | Water Elev | Q (CFS) | Vel (FPS) | Vel Head / SF Ave | Energy Grd.El. / HF | Super Elev / SE Dpth | Critical Depth / Froude N | Flow Top Width / Norm Dp | Height/Dia.-FT / "N" | Base Wt or I.D. / X-Fall | ZL / ZR | No Wth Prs/Pip / Type Ch |
|---|---|---|---|---|---|---|---|---|---|---|---|---|---|---|
| 192.221 | 86.099 | 1.511 | 87.610 | 59.00 | 14.83 | 3.42 | 91.03 | .00 | 2.41 | 3.47 | 3.500 | .000 | .00 | 1 .0 |
| 1.183 | .2367 | | | | | .0216 | .03 | 1.51 | 2.44 | .82 | .013 | .00 | .00 | PIPE |
| 193.404 | 86.379 | 1.567 | 87.946 | 59.00 | 14.14 | 3.10 | 91.05 | .00 | 2.41 | 3.48 | 3.500 | .000 | .00 | 1 .0 |
| 1.030 | .2367 | | | | | .0189 | .02 | 1.57 | 2.28 | .82 | .013 | .00 | .00 | PIPE |
| 194.434 | 86.623 | 1.625 | 88.248 | 59.00 | 13.48 | 2.82 | 91.07 | .00 | 2.41 | 3.49 | 3.500 | .000 | .00 | 1 .0 |
| .889 | .2367 | | | | | .0167 | .01 | 1.63 | 2.12 | .82 | .013 | .00 | .00 | PIPE |
| 195.323 | 86.833 | 1.686 | 88.519 | 59.00 | 12.85 | 2.57 | 91.09 | .00 | 2.41 | 3.50 | 3.500 | .000 | .00 | 1 .0 |
| .762 | .2367 | | | | | .0147 | .01 | 1.69 | 1.98 | .82 | .013 | .00 | .00 | PIPE |
| 196.086 | 87.014 | 1.750 | 88.764 | 59.00 | 12.26 | 2.33 | 91.10 | .00 | 2.41 | 3.50 | 3.500 | .000 | .00 | 1 .0 |
| .644 | .2367 | | | | | .0129 | .01 | 1.75 | 1.84 | .82 | .013 | .00 | .00 | PIPE |
| 196.730 | 87.166 | 1.818 | 88.984 | 59.00 | 11.69 | 2.12 | 91.10 | .00 | 2.41 | 3.50 | 3.500 | .000 | .00 | 1 .0 |
| .545 | .2367 | | | | | .0114 | .01 | 1.82 | 1.71 | .82 | .013 | .00 | .00 | PIPE |
| 197.275 | 87.295 | 1.888 | 89.183 | 59.00 | 11.14 | 1.93 | 91.11 | .00 | 2.41 | 3.49 | 3.500 | .000 | .00 | 1 .0 |
| .447 | .2367 | | | | | .0100 | .00 | 1.89 | 1.59 | .82 | .013 | .00 | .00 | PIPE |
| 197.722 | 87.401 | 1.962 | 89.363 | 59.00 | 10.62 | 1.75 | 91.12 | .00 | 2.41 | 3.47 | 3.500 | .000 | .00 | 1 .0 |
| .353 | .2367 | | | | | .0089 | .00 | 1.96 | 1.48 | .82 | .013 | .00 | .00 | PIPE |
| 198.074 | 87.484 | 2.041 | 89.525 | 59.00 | 10.13 | 1.59 | 91.12 | .00 | 2.41 | 3.45 | 3.500 | .000 | .00 | 1 .0 |
| .275 | .2367 | | | | | .0078 | .00 | 2.04 | 1.37 | .82 | .013 | .00 | .00 | PIPE |

2468 QUARRY CREEK
LINE 3 PER DWG 470-5A
PROPOSED Q

| Station / L/Elem | Invert Elev / Ch Slope | Depth (FT) | Water Elev | Q (CFS) | Vel (FPS) | Vel Head / SF Ave | Energy Grd.El. / HF | Super Elev / SE Dpth | Critical Depth / Froude N | Flow Top Width / Norm Dp | Height/ Dia.-FT / "N" | Base Wt or I.D. / X-Fall | ZL / ZR | No Wth Prs/Pip / Type Ch |
|---|---|---|---|---|---|---|---|---|---|---|---|---|---|---|
| 198.349 | 87.549 | 2.123 | 89.672 | 59.00 | 9.66 | 1.45 | 91.12 | .00 | 2.41 | 3.42 | 3.500 | .000 | .00 | 1 .0 |
| .190 | .2367 | | | | | .0069 | .00 | 2.12 | 1.27 | .82 | .013 | .00 | .00 | PIPE |
| 198.539 | 87.594 | 2.211 | 89.805 | 59.00 | 9.21 | 1.32 | 91.12 | .00 | 2.41 | 3.38 | 3.500 | .000 | .00 | 1 .0 |
| .116 | .2367 | | | | | .0062 | .00 | 2.21 | 1.18 | .82 | .013 | .00 | .00 | PIPE |
| 198.655 | 87.622 | 2.304 | 89.926 | 59.00 | 8.78 | 1.20 | 91.12 | .00 | 2.41 | 3.32 | 3.500 | .000 | .00 | 1 .0 |
| .035 | .2367 | | | | | .0055 | .00 | 2.30 | 1.09 | .82 | .013 | .00 | .00 | PIPE |
| WALL ENTRANCE | | | | | | | | | | | | | | |
| 198.690 | 87.630 | 2.407 | 90.037 | 59.00 | 8.36 | 1.09 | 91.12 | .00 | 2.41 | 3.24 | 3.500 | .000 | .00 | 0 .0 |

Program Package Serial Number: 1355

WATER SURFACE PROFILE LISTING Date:12-14-2011 Time: 9:49:28

2468 QUARRY CREEK
LINE 3 PER DWG 470-5A
AS-BUILT Q

Velocity @ end of riprap
nonerosive

| Station / L/Elem | Invert Elev / Ch Slope | Depth (FT) | Water Elev | Q (CFS) | Vel (FPS) | Vel Head / SF Ave | Energy Grd.El. / HF | Super Elev / SE Dpth | Critical Depth / Froude N | Flow Top Width / Norm Dp | Height/ Dia.-FT / "N" | Base Wt or I.D. / X-Fall | ZL / ZR | No Wth Prs/Pip / Type Ch |
|---|---|---|---|---|---|---|---|---|---|---|---|---|---|---|
| 64.560 | 71.140 | .988 | 72.128 | 32.50 | 4.72 | .35 | 72.47 | .00 | .99 | 9.93 | 1.000 | 4.000 | 3.00 | 0 .0 |
| .070 | .0042 | | | | | .0327 | .00 | .99 | 1.00 | 1.66 | .045 | .00 | 3.00 | TRAP |
| 64.630 | 71.140 | 1.021 | 72.162 | 32.50 | 4.50 | .31 | 72.48 | .00 | .99 | 10.13 | 1.000 | 4.000 | 3.00 | 0 .0 |
| .237 | .0042 | | | | | .0286 | .01 | 1.02 | .94 | 1.66 | .045 | .00 | 3.00 | TRAP |
| 64.867 | 71.141 | 1.056 | 72.197 | 32.50 | 4.29 | .29 | 72.48 | .00 | .99 | 10.34 | 1.000 | 4.000 | 3.00 | 0 .0 |
| .448 | .0042 | | | | | .0251 | .01 | 1.06 | .88 | 1.66 | .045 | .00 | 3.00 | TRAP |
| 65.315 | 71.143 | 1.091 | 72.234 | 32.50 | 4.09 | .26 | 72.49 | .00 | .99 | 10.55 | 1.000 | 4.000 | 3.00 | 0 .0 |
| .713 | .0042 | | | | | .0220 | .02 | 1.09 | .83 | 1.66 | .045 | .00 | 3.00 | TRAP |
| 66.028 | 71.146 | 1.128 | 72.274 | 32.50 | 3.90 | .24 | 72.51 | .00 | .99 | 10.77 | 1.000 | 4.000 | 3.00 | 0 .0 |
| 1.050 | .0042 | | | | | .0193 | .02 | 1.13 | .78 | 1.66 | .045 | .00 | 3.00 | TRAP |
| 67.078 | 71.151 | 1.165 | 72.316 | 32.50 | 3.72 | .22 | 72.53 | .00 | .99 | 10.99 | 1.000 | 4.000 | 3.00 | 0 .0 |
| 1.479 | .0042 | | | | | .0170 | .03 | 1.17 | .74 | 1.66 | .045 | .00 | 3.00 | TRAP |
| 68.557 | 71.157 | 1.203 | 72.360 | 32.50 | 3.55 | .20 | 72.56 | .00 | .99 | 11.22 | 1.000 | 4.000 | 3.00 | 0 .0 |
| 2.032 | .0042 | | | | | .0149 | .03 | 1.20 | .69 | 1.66 | .045 | .00 | 3.00 | TRAP |
| 70.589 | 71.165 | 1.243 | 72.408 | 32.50 | 3.38 | .18 | 72.59 | .00 | .99 | 11.46 | 1.000 | 4.000 | 3.00 | 0 .0 |
| 2.755 | .0042 | | | | | .0131 | .04 | 1.24 | .65 | 1.66 | .045 | .00 | 3.00 | TRAP |
| 73.344 | 71.177 | 1.283 | 72.460 | 32.50 | 3.23 | .16 | 72.62 | .00 | .99 | 11.70 | 1.000 | 4.000 | 3.00 | 0 .0 |
| 3.716 | .0042 | | | | | .0115 | .04 | 1.28 | .61 | 1.66 | .045 | .00 | 3.00 | TRAP |

2468 QUARRY CREEK
LINE 3 PER DWG 470-5A
AS-BUILT Q

| Station / L/Elem | Invert Elev / Ch Slope | Depth (FT) | Water Elev | Q (CFS) | Vel (FPS) | Vel Head / SF Ave | Energy Grd.El. / HF | Super Elev / SE Dpth | Critical Depth / Froude N | Flow Top Width / Norm Dp | Height/Dia.-FT / "N" | Base Wt or I.D. / X-Fall | ZL / ZR | No Wth Prs/Pip / Type Ch |
|---|---|---|---|---|---|---|---|---|---|---|---|---|---|---|
| 77.060 | 71.193 | 1.325 | 72.518 | 32.50 | 3.08 | .15 | 72.66 | .00 | .99 | 11.95 | 1.000 | 4.000 | 3.00 | 0 .0 |
| 1.467 | .0042 | | | | | .0105 | .02 | 1.32 | .58 | 1.66 | .045 | .00 | 3.00 | TRAP |
| 78.527 | 71.199 | 1.341 | 72.540 | 32.50 | 3.02 | .14 | 72.68 | .00 | .99 | 12.04 | 1.000 | 4.000 | 3.00 | 0 .0 |
| HYDRAULIC JUMP | | | | | | | | | | | | | | |
| 78.527 | 71.199 | .696 | 71.895 | 32.50 | 7.67 | .91 | 72.81 | .00 | .99 | 8.18 | 1.000 | 4.000 | 3.00 | 0 .0 |
| .223 | .0042 | | | | | .1383 | .03 | .70 | 1.88 | 1.66 | .045 | .00 | 3.00 | TRAP |
| 78.750 | 71.200 | .686 | 71.886 | 32.50 | 7.83 | .95 | 72.84 | .00 | .99 | 8.11 | 1.000 | 4.000 | 3.00 | 0 .0 |
| .139 | .0050 | | | | | .1141 | .02 | .69 | 1.93 | 1.51 | .040 | .00 | 3.00 | TRAP |
| 78.889 | 71.201 | .680 | 71.881 | 32.50 | 7.91 | .97 | 72.85 | .00 | .99 | 8.08 | 1.000 | 4.000 | 3.00 | 0 .0 |
| .615 | .0050 | | | | | .1242 | .08 | .68 | 1.96 | 1.51 | .040 | .00 | 3.00 | TRAP |
| 79.504 | 71.204 | .656 | 71.860 | 32.50 | 8.30 | 1.07 | 72.93 | .00 | .99 | 7.94 | 1.000 | 4.000 | 3.00 | 0 .0 |
| .611 | .0050 | | | | | .1420 | .09 | .66 | 2.08 | 1.51 | .040 | .00 | 3.00 | TRAP |
| 80.115 | 71.207 | .633 | 71.840 | 32.50 | 8.70 | 1.18 | 73.02 | .00 | .99 | 7.80 | 1.000 | 4.000 | 3.00 | 0 .0 |
| .604 | .0050 | | | | | .1625 | .10 | .63 | 2.22 | 1.51 | .040 | .00 | 3.00 | TRAP |
| 80.718 | 71.210 | .611 | 71.820 | 32.50 | 9.13 | 1.29 | 73.11 | .00 | .99 | 7.66 | 1.000 | 4.000 | 3.00 | 0 .0 |
| .594 | .0050 | | | | | .1860 | .11 | .61 | 2.36 | 1.51 | .040 | .00 | 3.00 | TRAP |
| 81.312 | 71.213 | .589 | 71.802 | 32.50 | 9.57 | 1.42 | 73.22 | .00 | .99 | 7.53 | 1.000 | 4.000 | 3.00 | 0 .0 |
| .582 | .0050 | | | | | .2130 | .12 | .59 | 2.51 | 1.51 | .040 | .00 | 3.00 | TRAP |

ungrouted riprap

grouted riprap

Program Package Serial Number: 1355

WATER SURFACE PROFILE LISTING Date:12-14-2011 Time: 9:49:28

2468 QUARRY CREEK
LINE 3 PER DWG 470-5A
AS-BUILT Q

| Station / L/Elem | Invert Elev / Ch Slope | Depth (FT) | Water Elev | Q (CFS) | Vel (FPS) | Vel Head / SF Ave | Energy Grd.El. / HF | Super Elev / SE Dpth | Critical Depth / Froude N | Flow Top Width / Norm Dp | Height/ Dia.-FT / "N" | Base Wt or I.D. / X-Fall | ZL / ZR | No Wth Prs/Pip / Type Ch |
|---|---|---|---|---|---|---|---|---|---|---|---|---|---|---|
| 81.894 | 71.216 | .568 | 71.783 | 32.50 | 10.04 | 1.56 | 73.35 | .00 | .99 | 7.41 | 1.000 | 4.000 | 3.00 | 0 .0 |
| .569 | .0050 | | | | | .2440 | .14 | .57 | 2.68 | 1.51 | .040 | .00 | 3.00 | TRAP |
| 82.463 | 71.219 | .547 | 71.766 | 32.50 | 10.53 | 1.72 | 73.49 | .00 | .99 | 7.28 | 1.000 | 4.000 | 3.00 | 0 .0 |
| .555 | .0050 | | | | | .2795 | .16 | .55 | 2.85 | 1.51 | .040 | .00 | 3.00 | TRAP |
| 83.018 | 71.221 | .527 | 71.749 | 32.50 | 11.04 | 1.89 | 73.64 | .00 | .99 | 7.16 | 1.000 | 4.000 | 3.00 | 0 .0 |
| .539 | .0050 | | | | | .3204 | .17 | .53 | 3.04 | 1.51 | .040 | .00 | 3.00 | TRAP |
| 83.557 | 71.224 | .508 | 71.732 | 32.50 | 11.58 | 2.08 | 73.81 | .00 | .99 | 7.05 | 1.000 | 4.000 | 3.00 | 0 .0 |
| .523 | .0050 | | | | | .3673 | .19 | .51 | 3.23 | 1.51 | .040 | .00 | 3.00 | TRAP |
| 84.081 | 71.227 | .489 | 71.716 | 32.50 | 12.15 | 2.29 | 74.01 | .00 | .99 | 6.94 | 1.000 | 4.000 | 3.00 | 0 .0 |
| .507 | .0050 | | | | | .4212 | .21 | .49 | 3.45 | 1.51 | .040 | .00 | 3.00 | TRAP |
| 84.588 | 71.229 | .471 | 71.700 | 32.50 | 12.74 | 2.52 | 74.22 | .00 | .99 | 6.83 | 1.000 | 4.000 | 3.00 | 0 .0 |
| .490 | .0050 | | | | | .4833 | .24 | .47 | 3.67 | 1.51 | .040 | .00 | 3.00 | TRAP |
| 85.078 | 71.232 | .454 | 71.685 | 32.50 | 13.36 | 2.77 | 74.46 | .00 | .99 | 6.72 | 1.000 | 4.000 | 3.00 | 0 .0 |
| .474 | .0050 | | | | | .5546 | .26 | .45 | 3.91 | 1.51 | .040 | .00 | 3.00 | TRAP |
| 85.551 | 71.234 | .437 | 71.671 | 32.50 | 14.01 | 3.05 | 74.72 | .00 | .99 | 6.62 | 1.000 | 4.000 | 3.00 | 0 .0 |
| .457 | .0050 | | | | | .6367 | .29 | .44 | 4.17 | 1.51 | .040 | .00 | 3.00 | TRAP |
| 86.008 | 71.236 | .420 | 71.657 | 32.50 | 14.70 | 3.35 | 75.01 | .00 | .99 | 6.52 | 1.000 | 4.000 | 3.00 | 0 .0 |
| .440 | .0050 | | | | | .7312 | .32 | .42 | 4.45 | 1.51 | .040 | .00 | 3.00 | TRAP |

Program Package Serial Number: 1355

WATER SURFACE PROFILE LISTING Date:12-14-2011 Time: 9:49:28

2468 QUARRY CREEK
LINE 3 PER DWG 470-5A
AS-BUILT Q

| Station / L/Elem | Invert Elev / Ch Slope | Depth (FT) | Water Elev | Q (CFS) | Vel (FPS) | Vel Head / SF Ave | Energy Grd.El. / HF | Super Elev / SE Dpth | Critical Depth / Froude N | Flow Top Width / Norm Dp | Height/ Dia.-FT / "N" | Base Wt or I.D. / X-Fall | ZL / ZR | No Wth Prs/Pip / Type Ch |
|---|---|---|---|---|---|---|---|---|---|---|---|---|---|---|
| 86.448 | 71.238 | .404 | 71.643 | 32.50 | 15.42 | 3.69 | 75.33 | .00 | .99 | 6.43 | 1.000 | 4.000 | 3.00 | 0 .0 |
| .423 | .0050 | | | | | .8400 | .36 | .40 | 4.74 | 1.51 | .040 | .00 | 3.00 | TRAP |
| 86.872 | 71.241 | .389 | 71.630 | 32.50 | 16.17 | 4.06 | 75.69 | .00 | .99 | 6.33 | 1.000 | 4.000 | 3.00 | 0 .0 |
| .407 | .0050 | | | | | .9654 | .39 | .39 | 5.06 | 1.51 | .040 | .00 | 3.00 | TRAP |
| 87.279 | 71.243 | .374 | 71.617 | 32.50 | 16.96 | 4.46 | 76.08 | .00 | .99 | 6.24 | 1.000 | 4.000 | 3.00 | 0 .0 |
| .391 | .0050 | | | | | 1.1099 | .43 | .37 | 5.39 | 1.51 | .040 | .00 | 3.00 | TRAP |
| WARNING: POSSIBLE ERROR IN CALCULATIONS, PROGRAM USES MANNINGS, EQUATION, AVERAGE FRICTION SLOPE = 1.10995 | | | | | | | | | | | | | | |
| 87.670 | 71.245 | .360 | 71.604 | 32.50 | 17.78 | 4.91 | 76.52 | .00 | .99 | 6.16 | 1.000 | 4.000 | 3.00 | 0 .0 |
| .375 | .0050 | | | | | 1.2766 | .48 | .36 | 5.75 | 1.51 | .040 | .00 | 3.00 | TRAP |
| WARNING: POSSIBLE ERROR IN CALCULATIONS, PROGRAM USES MANNINGS, EQUATION, AVERAGE FRICTION SLOPE = 1.27657 | | | | | | | | | | | | | | |
| 88.045 | 71.246 | .346 | 71.592 | 32.50 | 18.65 | 5.40 | 76.99 | .00 | .99 | 6.08 | 1.000 | 4.000 | 3.00 | 0 .0 |
| .360 | .0050 | | | | | 1.4687 | .53 | .35 | 6.14 | 1.51 | .040 | .00 | 3.00 | TRAP |
| WARNING: POSSIBLE ERROR IN CALCULATIONS, PROGRAM USES MANNINGS, EQUATION, AVERAGE FRICTION SLOPE = 1.46875 | | | | | | | | | | | | | | |
| 88.405 | 71.248 | .332 | 71.581 | 32.50 | 19.56 | 5.94 | 77.52 | .00 | .99 | 5.99 | 1.000 | 4.000 | 3.00 | 0 .0 |
| .345 | .0050 | | | | | 1.6905 | .58 | .33 | 6.55 | 1.51 | .040 | .00 | 3.00 | TRAP |
| WARNING: POSSIBLE ERROR IN CALCULATIONS, PROGRAM USES MANNINGS, EQUATION, AVERAGE FRICTION SLOPE = 1.69050 | | | | | | | | | | | | | | |
| 88.750 | 71.250 | .319 | 71.569 | 32.50 | 20.52 | 6.54 | 78.11 | .00 | .99 | 5.92 | 1.000 | 4.000 | 3.00 | 0 .0 |
| TRANS STR 1.0000 | | | | | | 1.2995 | .01 | .32 | 6.99 | | .040 | .00 | 3.00 | TRAP |
| WARNING: POSSIBLE ERROR IN CALCULATIONS, PROGRAM USES MANNINGS, EQUATION, AVERAGE FRICTION SLOPE = 1.29947 | | | | | | | | | | | | | | |
| 88.760 | 71.260 | .790 | 72.050 | 32.50 | 19.95 | 6.18 | 78.23 | .00 | 1.76 | 2.93 | 3.500 | .000 | .00 | 1 .0 |
| 1.123 | .0051 | | | | | .0843 | .09 | .79 | 4.71 | 1.65 | .013 | .00 | .00 | PIPE |
| 89.883 | 71.266 | .786 | 72.052 | 32.50 | 20.10 | 6.28 | 78.33 | .00 | 1.76 | 2.92 | 3.500 | .000 | .00 | 1 .0 |

Velocity at pipe outlet

| | | | | | | | | | | | |
|---|---|---|---|---|---|---|---|---|---|---|---|
| 6.980 | .0051 | .0913 | .64 | .79 | 4.76 | 1.65 | .013 | .00 | .00 | PIPE |

2468 QUARRY CREEK
LINE 3 PER DWG 470-5A
AS-BUILT Q

| Station / L/Elem | Invert Elev / Ch Slope | Depth (FT) | Water Elev | Q (CFS) | Vel (FPS) | Vel Head / SF Ave | Energy Grd.El. / HF | Super Elev / SE Dpth | Critical Depth / Froude N | Flow Top Width / Norm Dp | Height/ Dia.-FT / "N" | Base Wt or I.D. / X-Fall | ZL / ZR | No Wth Prs/Pip / Type Ch |
|---|---|---|---|---|---|---|---|---|---|---|---|---|---|---|
| 96.863 | 71.302 | .760 | 72.062 | 32.50 | 21.08 | 6.90 | 78.96 | .00 | 1.76 | 2.89 | 3.500 | .000 | .00 | 1 .0 |
| 6.698 | .0051 | | | | | .1045 | .70 | .76 | 5.08 | 1.65 | .013 | .00 | .00 | PIPE |
| 103.561 | 71.336 | .735 | 72.071 | 32.50 | 22.11 | 7.59 | 79.66 | .00 | 1.76 | 2.85 | 3.500 | .000 | .00 | 1 .0 |
| 6.427 | .0051 | | | | | .1195 | .77 | .74 | 5.43 | 1.65 | .013 | .00 | .00 | PIPE |
| 109.989 | 71.369 | .711 | 72.080 | 32.50 | 23.19 | 8.35 | 80.43 | .00 | 1.76 | 2.82 | 3.500 | .000 | .00 | 1 .0 |
| 6.164 | .0051 | | | | | .1367 | .84 | .71 | 5.79 | 1.65 | .013 | .00 | .00 | PIPE |
| 116.152 | 71.400 | .687 | 72.088 | 32.50 | 24.32 | 9.19 | 81.28 | .00 | 1.76 | 2.78 | 3.500 | .000 | .00 | 1 .0 |
| 5.925 | .0051 | | | | | .1565 | .93 | .69 | 6.18 | 1.65 | .013 | .00 | .00 | PIPE |
| 122.077 | 71.431 | .665 | 72.096 | 32.50 | 25.51 | 10.11 | 82.20 | .00 | 1.76 | 2.75 | 3.500 | .000 | .00 | 1 .0 |
| 5.683 | .0051 | | | | | .1792 | 1.02 | .67 | 6.60 | 1.65 | .013 | .00 | .00 | PIPE |
| 127.760 | 71.460 | .644 | 72.104 | 32.50 | 26.76 | 11.12 | 83.22 | .00 | 1.76 | 2.71 | 3.500 | .000 | .00 | 1 .0 |
| 4.000 | .0825 | | | | | .1971 | .79 | .64 | 7.05 | .79 | .013 | .00 | .00 | PIPE |
| 131.760 | 71.790 | .635 | 72.425 | 32.50 | 27.31 | 11.58 | 84.01 | .00 | 1.76 | 2.70 | 3.500 | .000 | .00 | 1 .0 |
| 13.148 | .2367 | | | | | .1960 | 2.58 | .63 | 7.25 | .61 | .013 | .00 | .00 | PIPE |
| 144.908 | 74.902 | .645 | 75.547 | 32.50 | 26.65 | 11.03 | 86.58 | .00 | 1.76 | 2.71 | 3.500 | .000 | .00 | 1 .0 |
| 16.497 | .2367 | | | | | .1772 | 2.92 | .65 | 7.01 | .61 | .013 | .00 | .00 | PIPE |
| 161.405 | 78.806 | .667 | 79.474 | 32.50 | 25.41 | 10.03 | 89.50 | .00 | 1.76 | 2.75 | 3.500 | .000 | .00 | 1 .0 |
| 10.867 | .2367 | | | | | .1548 | 1.68 | .67 | 6.57 | .61 | .013 | .00 | .00 | PIPE |

2468 QUARRY CREEK
LINE 3 PER DWG 470-5A
AS-BUILT Q

| Station / L/Elem | Invert Elev / Ch Slope | Depth (FT) | Water Elev | Q (CFS) | Vel (FPS) | Vel Head / SF Ave | Energy Grd.El. / HF | Super Elev / SE Dpth | Critical Depth / Froude N | Flow Top Width / Norm Dp | Height/Dia.-FT / "N" | Base Wt or I.D. / X-Fall | ZL / ZR | No Wth Prs/Pip / Type Ch |
|---|---|---|---|---|---|---|---|---|---|---|---|---|---|---|
| 172.272 | 81.379 | .689 | 82.068 | 32.50 | 24.23 | 9.12 | 91.18 | .00 | 1.76 | 2.78 | 3.500 | .000 | .00 | 1 .0 |
| 7.936 | .2367 | | | | | .1353 | 1.07 | .69 | 6.15 | .61 | .013 | .00 | .00 | PIPE |
| 180.207 | 83.257 | .713 | 83.970 | 32.50 | 23.10 | 8.29 | 92.26 | .00 | 1.76 | 2.82 | 3.500 | .000 | .00 | 1 .0 |
| 6.158 | .2367 | | | | | .1182 | .73 | .71 | 5.76 | .61 | .013 | .00 | .00 | PIPE |
| 186.366 | 84.714 | .737 | 85.452 | 32.50 | 22.03 | 7.53 | 92.99 | .00 | 1.76 | 2.85 | 3.500 | .000 | .00 | 1 .0 |
| 4.949 | .2367 | | | | | .1033 | .51 | .74 | 5.40 | .61 | .013 | .00 | .00 | PIPE |
| 191.314 | 85.886 | .762 | 86.648 | 32.50 | 21.00 | 6.85 | 93.50 | .00 | 1.76 | 2.89 | 3.500 | .000 | .00 | 1 .0 |
| 4.076 | .2367 | | | | | .0903 | .37 | .76 | 5.06 | .61 | .013 | .00 | .00 | PIPE |
| 195.391 | 86.851 | .788 | 87.639 | 32.50 | 20.03 | 6.23 | 93.87 | .00 | 1.76 | 2.92 | 3.500 | .000 | .00 | 1 .0 |
| 3.418 | .2367 | | | | | .0789 | .27 | .79 | 4.74 | .61 | .013 | .00 | .00 | PIPE |
| 198.808 | 87.659 | .815 | 88.475 | 32.50 | 19.09 | 5.66 | 94.14 | .00 | 1.76 | 2.96 | 3.500 | .000 | .00 | 1 .0 |
| 2.903 | .2367 | | | | | .0690 | .20 | .82 | 4.44 | .61 | .013 | .00 | .00 | PIPE |
| 201.711 | 88.346 | .843 | 89.189 | 32.50 | 18.20 | 5.15 | 94.34 | .00 | 1.76 | 2.99 | 3.500 | .000 | .00 | 1 .0 |
| 2.489 | .2367 | | | | | .0604 | .15 | .84 | 4.15 | .61 | .013 | .00 | .00 | PIPE |
| 204.200 | 88.935 | .872 | 89.808 | 32.50 | 17.36 | 4.68 | 94.49 | .00 | 1.76 | 3.03 | 3.500 | .000 | .00 | 1 .0 |
| 2.150 | .2367 | | | | | .0528 | .11 | .87 | 3.89 | .61 | .013 | .00 | .00 | PIPE |
| 206.349 | 89.444 | .902 | 90.346 | 32.50 | 16.55 | 4.25 | 94.60 | .00 | 1.76 | 3.06 | 3.500 | .000 | .00 | 1 .0 |
| 1.867 | .2367 | | | | | .0462 | .09 | .90 | 3.64 | .61 | .013 | .00 | .00 | PIPE |

2468 QUARRY CREEK
LINE 3 PER DWG 470-5A
AS-BUILT Q

| Station | Invert Elev | Depth (FT) | Water Elev | Q (CFS) | Vel (FPS) | Vel Head | Energy Grd.El. | Super Elev | Critical Depth | Flow Top Width | Height/ Dia.-FT | Base Wt or I.D. | ZL | No Wth Prs/Pip |
|---|---|---|---|---|---|---|---|---|---|---|---|---|---|---|
| L/Elem | Ch Slope | | | | | SF Ave | HF | SE Dpth | Froude N | Norm Dp | "N" | X-Fall | ZR | Type Ch |
| 208.216 | 89.886 | .933 | 90.819 | 32.50 | 15.78 | 3.87 | 94.69 | .00 | 1.76 | 3.10 | 3.500 | .000 | .00 | 1 .0 |
| 1.628 | .2367 | | | | | .0404 | .07 | .93 | 3.41 | .61 | .013 | .00 | .00 | PIPE |
| 209.844 | 90.271 | .965 | 91.236 | 32.50 | 15.05 | 3.51 | 94.75 | .00 | 1.76 | 3.13 | 3.500 | .000 | .00 | 1 .0 |
| 1.418 | .2367 | | | | | .0353 | .05 | .97 | 3.19 | .61 | .013 | .00 | .00 | PIPE |
| 211.262 | 90.607 | .999 | 91.606 | 32.50 | 14.35 | 3.20 | 94.80 | .00 | 1.76 | 3.16 | 3.500 | .000 | .00 | 1 .0 |
| 1.247 | .2367 | | | | | .0309 | .04 | 1.00 | 2.99 | .61 | .013 | .00 | .00 | PIPE |
| 212.509 | 90.902 | 1.033 | 91.935 | 32.50 | 13.68 | 2.90 | 94.84 | .00 | 1.76 | 3.19 | 3.500 | .000 | .00 | 1 .0 |
| 1.083 | .2367 | | | | | .0271 | .03 | 1.03 | 2.79 | .61 | .013 | .00 | .00 | PIPE |
| 213.592 | 91.158 | 1.070 | 92.229 | 32.50 | 13.04 | 2.64 | 94.87 | .00 | 1.76 | 3.23 | 3.500 | .000 | .00 | 1 .0 |
| .954 | .2367 | | | | | .0237 | .02 | 1.07 | 2.61 | .61 | .013 | .00 | .00 | PIPE |
| 214.546 | 91.384 | 1.107 | 92.491 | 32.50 | 12.43 | 2.40 | 94.89 | .00 | 1.76 | 3.26 | 3.500 | .000 | .00 | 1 .0 |
| .830 | .2367 | | | | | .0208 | .02 | 1.11 | 2.45 | .61 | .013 | .00 | .00 | PIPE |
| 215.376 | 91.581 | 1.146 | 92.727 | 32.50 | 11.86 | 2.18 | 94.91 | .00 | 1.76 | 3.28 | 3.500 | .000 | .00 | 1 .0 |
| .720 | .2367 | | | | | .0182 | .01 | 1.15 | 2.29 | .61 | .013 | .00 | .00 | PIPE |
| 216.096 | 91.751 | 1.187 | 92.938 | 32.50 | 11.30 | 1.98 | 94.92 | .00 | 1.76 | 3.31 | 3.500 | .000 | .00 | 1 .0 |
| .627 | .2367 | | | | | .0159 | .01 | 1.19 | 2.14 | .61 | .013 | .00 | .00 | PIPE |
| 216.723 | 91.900 | 1.229 | 93.129 | 32.50 | 10.78 | 1.80 | 94.93 | .00 | 1.76 | 3.34 | 3.500 | .000 | .00 | 1 .0 |
| .539 | .2367 | | | | | .0140 | .01 | 1.23 | 2.00 | .61 | .013 | .00 | .00 | PIPE |

2468 QUARRY CREEK
LINE 3 PER DWG 470-5A
AS-BUILT Q

| Station / L/Elem | Invert Elev / Ch Slope | Depth (FT) | Water Elev | Q (CFS) | Vel (FPS) | Vel Head / SF Ave | Energy Grd.El. / HF | Super Elev / SE Dpth | Critical Depth / Froude N | Flow Top Width / Norm Dp | Height/ Dia.-FT / "N" | Base Wt or I.D. / X-Fall | ZL / ZR | No Wth Prs/Pip / Type Ch |
|---|---|---|---|---|---|---|---|---|---|---|---|---|---|---|
| 217.262 | 92.027 | 1.273 | 93.300 | 32.50 | 10.28 | 1.64 | 94.94 | .00 | 1.76 | 3.37 | 3.500 | .000 | .00 | 1 .0 |
| .464 | .2367 | | | | | .0123 | .01 | 1.27 | 1.87 | .61 | .013 | .00 | .00 | PIPE |
| 217.725 | 92.137 | 1.318 | 93.455 | 32.50 | 9.80 | 1.49 | 94.95 | .00 | 1.76 | 3.39 | 3.500 | .000 | .00 | 1 .0 |
| .387 | .2367 | | | | | .0107 | .00 | 1.32 | 1.75 | .61 | .013 | .00 | .00 | PIPE |
| 218.113 | 92.228 | 1.366 | 93.595 | 32.50 | 9.34 | 1.36 | 94.95 | .00 | 1.76 | 3.41 | 3.500 | .000 | .00 | 1 .0 |
| .322 | .2367 | | | | | .0094 | .00 | 1.37 | 1.63 | .61 | .013 | .00 | .00 | PIPE |
| 218.435 | 92.305 | 1.416 | 93.721 | 32.50 | 8.91 | 1.23 | 94.95 | .00 | 1.76 | 3.44 | 3.500 | .000 | .00 | 1 .0 |
| .267 | .2367 | | | | | .0083 | .00 | 1.42 | 1.52 | .61 | .013 | .00 | .00 | PIPE |
| 218.702 | 92.368 | 1.467 | 93.835 | 32.50 | 8.49 | 1.12 | 94.95 | .00 | 1.76 | 3.45 | 3.500 | .000 | .00 | 1 .0 |
| .208 | .2367 | | | | | .0073 | .00 | 1.47 | 1.42 | .61 | .013 | .00 | .00 | PIPE |
| 218.910 | 92.417 | 1.521 | 93.938 | 32.50 | 8.10 | 1.02 | 94.96 | .00 | 1.76 | 3.47 | 3.500 | .000 | .00 | 1 .0 |
| .159 | .2367 | | | | | .0064 | .00 | 1.52 | 1.33 | .61 | .013 | .00 | .00 | PIPE |
| 219.069 | 92.455 | 1.577 | 94.032 | 32.50 | 7.72 | .93 | 94.96 | .00 | 1.76 | 3.48 | 3.500 | .000 | .00 | 1 .0 |
| .109 | .2367 | | | | | .0056 | .00 | 1.58 | 1.24 | .61 | .013 | .00 | .00 | PIPE |
| 219.178 | 92.481 | 1.636 | 94.117 | 32.50 | 7.36 | .84 | 94.96 | .00 | 1.76 | 3.49 | 3.500 | .000 | .00 | 1 .0 |
| .063 | .2367 | | | | | .0049 | .00 | 1.64 | 1.15 | .61 | .013 | .00 | .00 | PIPE |
| 219.240 | 92.495 | 1.698 | 94.193 | 32.50 | 7.02 | .76 | 94.96 | .00 | 1.76 | 3.50 | 3.500 | .000 | .00 | 1 .0 |
| .020 | .2367 | | | | | .0043 | .00 | 1.70 | 1.08 | .61 | .013 | .00 | .00 | PIPE |

Program Package Serial Number: 1355

WATER SURFACE PROFILE LISTING Date:12-14-2011 Time: 9:49:28

2468 QUARRY CREEK
LINE 3 PER DWG 470-5A
AS-BUILT Q

| Station / L/Elem | Invert Elev / Ch Slope | Depth (FT) | Water Elev | Q (CFS) | Vel (FPS) | Vel Head / SF Ave | Energy Grd.El. / HF | Super Elev / SE Dpth | Critical Depth / Froude N | Flow Top Width / Norm Dp | Height/Dia.-FT / "N" | Base Wt or I.D. / X-Fall | ZL / ZR | No Wth Prs/Pip / Type Ch |
|---|---|---|---|---|---|---|---|---|---|---|---|---|---|---|
| WALL ENTRANCE | | | | | | | | | | | | | | |
| 219.260 | 92.500 | 1.765 | 94.265 | 32.50 | 6.68 | .69 | 94.96 | .00 | 1.76 | 3.50 | 3.500 | .000 | .00 | 0 .0 |

Program Package Serial Number: 1355

WATER SURFACE PROFILE LISTING

Date: 2-28-2012 Time: 5:26:44

2468 QUARRY CREEK
LINE 4 PER DWG 470-5A
PROPOSED Q

| Station / L/Elem | Invert Elev / Ch Slope | Depth (FT) | Water Elev | Q (CFS) | Vel (FPS) | Vel Head / SF Ave | Energy Grd.El. / HF | Super Elev / SE Dpth | Critical Depth / Froude N | Flow Top Width / Norm Dp | Height/ Dia.-FT / "N" | Base Wt or I.D. / X-Fall | ZL / ZR | No Wth Prs/Pip / Type Ch |
|---|---|---|---|---|---|---|---|---|---|---|---|---|---|---|
| 77.740 | 85.920 | 1.146 | 87.066 | 42.80 | 5.02 | .39 | 87.46 | .00 | 1.15 | 10.87 | 1.000 | 4.000 | 3.00 | 0 .0 |
| .084 | .0049 | | | | | .0314 | .00 | 1.15 | 1.00 | 1.82 | .045 | .00 | 3.00 | TRAP |
| 77.824 | 85.920 | 1.184 | 87.104 | 42.80 | 4.79 | .36 | 87.46 | .00 | 1.15 | 11.10 | 1.000 | 4.000 | 3.00 | 0 .0 |
| .287 | .0049 | | | | | .0276 | .01 | 1.18 | .94 | 1.82 | .045 | .00 | 3.00 | TRAP |
| 78.111 | 85.922 | 1.223 | 87.144 | 42.80 | 4.57 | .32 | 87.47 | .00 | 1.15 | 11.34 | 1.000 | 4.000 | 3.00 | 0 .0 |
| .544 | .0049 | | | | | .0242 | .01 | 1.22 | .88 | 1.82 | .045 | .00 | 3.00 | TRAP |
| 78.656 | 85.924 | 1.262 | 87.187 | 42.80 | 4.35 | .29 | 87.48 | .00 | 1.15 | 11.57 | 1.000 | 4.000 | 3.00 | 0 .0 |
| .872 | .0049 | | | | | .0213 | .02 | 1.26 | .83 | 1.82 | .045 | .00 | 3.00 | TRAP |
| 79.528 | 85.929 | 1.303 | 87.232 | 42.80 | 4.15 | .27 | 87.50 | .00 | 1.15 | 11.82 | 1.000 | 4.000 | 3.00 | 0 .0 |
| 1.294 | .0049 | | | | | .0187 | .02 | 1.30 | .78 | 1.82 | .045 | .00 | 3.00 | TRAP |
| 80.822 | 85.935 | 1.346 | 87.281 | 42.80 | 3.96 | .24 | 87.52 | .00 | 1.15 | 12.07 | 1.000 | 4.000 | 3.00 | 0 .0 |
| 1.841 | .0049 | | | | | .0164 | .03 | 1.35 | .74 | 1.82 | .045 | .00 | 3.00 | TRAP |
| 82.662 | 85.944 | 1.389 | 87.333 | 42.80 | 3.77 | .22 | 87.55 | .00 | 1.15 | 12.33 | 1.000 | 4.000 | 3.00 | 0 .0 |
| 2.561 | .0049 | | | | | .0144 | .04 | 1.39 | .69 | 1.82 | .045 | .00 | 3.00 | TRAP |
| 85.224 | 85.957 | 1.433 | 87.390 | 42.80 | 3.60 | .20 | 87.59 | .00 | 1.15 | 12.60 | 1.000 | 4.000 | 3.00 | 0 .0 |
| 3.530 | .0049 | | | | | .0126 | .04 | 1.43 | .65 | 1.82 | .045 | .00 | 3.00 | TRAP |
| 88.753 | 85.974 | 1.479 | 87.453 | 42.80 | 3.43 | .18 | 87.64 | .00 | 1.15 | 12.87 | 1.000 | 4.000 | 3.00 | 0 .0 |
| .155 | .0049 | | | | | .0118 | .00 | 1.48 | .61 | 1.82 | .045 | .00 | 3.00 | TRAP |

2468 QUARRY CREEK
LINE 4 PER DWG 470-5A
PROPOSED Q

| Station / L/Elem | Invert Elev / Ch Slope | Depth (FT) | Water Elev | Q (CFS) | Vel (FPS) | Vel Head / SF Ave | Energy Grd.El. / HF | Super Elev / SE Dpth | Critical Depth / Froude N | Flow Top Width / Norm Dp | Height/ Dia.-FT / "N" | Base Wt or I.D. / X-Fall | ZL / ZR | No Wth Prs/Pip / Type Ch |
|---|---|---|---|---|---|---|---|---|---|---|---|---|---|---|
| 88.908 | 85.975 | 1.479 | 87.454 | 42.80 | 3.43 | .18 | 87.64 | .00 | 1.15 | 12.87 | 1.000 | 4.000 | 3.00 | 0 .0 |
| HYDRAULIC JUMP | | | | | | | | | | | | | | |
| 88.908 | 85.975 | .861 | 86.836 | 42.80 | 7.55 | .89 | 87.72 | .00 | 1.15 | 9.17 | 1.000 | 4.000 | 3.00 | 0 .0 |
| .522 | .0049 | | | | | .1106 | .06 | .86 | 1.69 | 1.82 | .045 | .00 | 3.00 | TRAP |
| 89.431 | 85.977 | .832 | 86.809 | 42.80 | 7.92 | .97 | 87.78 | .00 | 1.15 | 8.99 | 1.000 | 4.000 | 3.00 | 0 .0 |
| .569 | .0049 | | | | | .1263 | .07 | .83 | 1.80 | 1.82 | .045 | .00 | 3.00 | TRAP |
| 90.000 | 85.980 | .804 | 86.784 | 42.80 | 8.31 | 1.07 | 87.86 | .00 | 1.15 | 8.82 | 1.000 | 4.000 | 3.00 | 0 .0 |
| .594 | .0040 | | | | | .1126 | .07 | .80 | 1.92 | 1.81 | .040 | .00 | 3.00 | TRAP |
| 90.594 | 85.982 | .781 | 86.764 | 42.80 | 8.64 | 1.16 | 87.92 | .00 | 1.15 | 8.69 | 1.000 | 4.000 | 3.00 | 0 .0 |
| .723 | .0040 | | | | | .1272 | .09 | .78 | 2.02 | 1.81 | .040 | .00 | 3.00 | TRAP |
| 91.317 | 85.985 | .754 | 86.740 | 42.80 | 9.06 | 1.27 | 88.01 | .00 | 1.15 | 8.53 | 1.000 | 4.000 | 3.00 | 0 .0 |
| .717 | .0040 | | | | | .1454 | .10 | .75 | 2.14 | 1.81 | .040 | .00 | 3.00 | TRAP |
| 92.034 | 85.988 | .728 | 86.716 | 42.80 | 9.50 | 1.40 | 88.12 | .00 | 1.15 | 8.37 | 1.000 | 4.000 | 3.00 | 0 .0 |
| .709 | .0040 | | | | | .1662 | .12 | .73 | 2.28 | 1.81 | .040 | .00 | 3.00 | TRAP |
| 92.742 | 85.991 | .703 | 86.694 | 42.80 | 9.97 | 1.54 | 88.24 | .00 | 1.15 | 8.22 | 1.000 | 4.000 | 3.00 | 0 .0 |
| .697 | .0040 | | | | | .1900 | .13 | .70 | 2.43 | 1.81 | .040 | .00 | 3.00 | TRAP |
| 93.440 | 85.994 | .678 | 86.672 | 42.80 | 10.45 | 1.70 | 88.37 | .00 | 1.15 | 8.07 | 1.000 | 4.000 | 3.00 | 0 .0 |
| .683 | .0040 | | | | | .2173 | .15 | .68 | 2.59 | 1.81 | .040 | .00 | 3.00 | TRAP |

2468 QUARRY CREEK
LINE 4 PER DWG 470-5A
PROPOSED Q

| Station / L/Elem | Invert Elev / Ch Slope | Depth (FT) | Water Elev | Q (CFS) | Vel (FPS) | Vel Head / SF Ave | Energy Grd.El. / HF | Super Elev / SE Dpth | Critical Depth / Froude N | Flow Top Width / Norm Dp | Height/ Dia.-FT / "N" | Base Wt or I.D. / X-Fall | ZL / ZR | No Wth Prs/Pip / Type | Ch |
|---|---|---|---|---|---|---|---|---|---|---|---|---|---|---|---|
| 94.123 | 85.997 | .655 | 86.651 | 42.80 | 10.96 | 1.87 | 88.52 | .00 | 1.15 | 7.93 | 1.000 | 4.000 | 3.00 | 0 | .0 |
| .668 | .0040 | | | | | .2486 | .17 | .65 | 2.75 | 1.81 | .040 | .00 | 3.00 | TRAP | |
| 94.791 | 85.999 | .632 | 86.631 | 42.80 | 11.50 | 2.05 | 88.68 | .00 | 1.15 | 7.79 | 1.000 | 4.000 | 3.00 | 0 | .0 |
| .652 | .0040 | | | | | .2845 | .19 | .63 | 2.93 | 1.81 | .040 | .00 | 3.00 | TRAP | |
| 95.443 | 86.002 | .609 | 86.611 | 42.80 | 12.06 | 2.26 | 88.87 | .00 | 1.15 | 7.65 | 1.000 | 4.000 | 3.00 | 0 | .0 |
| .634 | .0040 | | | | | .3257 | .21 | .61 | 3.12 | 1.81 | .040 | .00 | 3.00 | TRAP | |
| 96.077 | 86.004 | .587 | 86.592 | 42.80 | 12.65 | 2.48 | 89.08 | .00 | 1.15 | 7.52 | 1.000 | 4.000 | 3.00 | 0 | .0 |
| .616 | .0040 | | | | | .3729 | .23 | .59 | 3.32 | 1.81 | .040 | .00 | 3.00 | TRAP | |
| 96.693 | 86.007 | .566 | 86.573 | 42.80 | 13.26 | 2.73 | 89.30 | .00 | 1.15 | 7.40 | 1.000 | 4.000 | 3.00 | 0 | .0 |
| .597 | .0040 | | | | | .4271 | .26 | .57 | 3.54 | 1.81 | .040 | .00 | 3.00 | TRAP | |
| 97.290 | 86.009 | .546 | 86.555 | 42.80 | 13.91 | 3.01 | 89.56 | .00 | 1.15 | 7.27 | 1.000 | 4.000 | 3.00 | 0 | .0 |
| .578 | .0040 | | | | | .4894 | .28 | .55 | 3.77 | 1.81 | .040 | .00 | 3.00 | TRAP | |
| 97.869 | 86.012 | .526 | 86.537 | 42.80 | 14.59 | 3.31 | 89.84 | .00 | 1.15 | 7.16 | 1.000 | 4.000 | 3.00 | 0 | .0 |
| .559 | .0040 | | | | | .5609 | .31 | .53 | 4.02 | 1.81 | .040 | .00 | 3.00 | TRAP | |
| 98.428 | 86.014 | .507 | 86.520 | 42.80 | 15.30 | 3.64 | 90.16 | .00 | 1.15 | 7.04 | 1.000 | 4.000 | 3.00 | 0 | .0 |
| .540 | .0040 | | | | | .6430 | .35 | .51 | 4.28 | 1.81 | .040 | .00 | 3.00 | TRAP | |
| 98.968 | 86.016 | .488 | 86.504 | 42.80 | 16.05 | 4.00 | 90.50 | .00 | 1.15 | 6.93 | 1.000 | 4.000 | 3.00 | 0 | .0 |
| .521 | .0040 | | | | | .7375 | .38 | .49 | 4.56 | 1.81 | .040 | .00 | 3.00 | TRAP | |

2468 QUARRY CREEK
LINE 4 PER DWG 470-5A
PROPOSED Q

| Station / L/Elem | Invert Elev / Ch Slope | Depth (FT) | Water Elev | Q (CFS) | Vel (FPS) | Vel Head / SF Ave | Energy Grd.El. / HF | Super Elev / SE Dpth | Critical Depth / Froude N | Flow Top Width / Norm Dp | Height/ Dia.-FT / "N" | Base Wt or I.D. / X-Fall | ZL / ZR | No Wth Prs/Pip / Type Ch |
|---|---|---|---|---|---|---|---|---|---|---|---|---|---|---|
| 99.488 | 86.018 | .470 | 86.488 | 42.80 | 16.83 | 4.40 | 90.89 | .00 | 1.15 | 6.82 | 1.000 | 4.000 | 3.00 | 0 .0 |
| .502 | .0040 | | | | | .8461 | .42 | .47 | 4.86 | 1.81 | .040 | .00 | 3.00 | TRAP |
| 99.990 | 86.020 | .453 | 86.473 | 42.80 | 17.65 | 4.84 | 91.31 | .00 | 1.15 | 6.72 | 1.000 | 4.000 | 3.00 | 0 .0 |
| TRANS STR | 1.0000 | | | | | .6440 | .01 | .45 | 5.18 | | .040 | .00 | 3.00 | TRAP |
| 100.000 | 86.030 | 1.092 | 87.122 | 42.80 | 16.70 | 4.33 | 91.45 | .00 | 2.04 | 3.24 | 3.500 | .000 | .00 | 1 .0 |
| 4.461 | .0543 | | | | | .0401 | .18 | 1.09 | 3.31 | 1.01 | .013 | .00 | .00 | PIPE |
| 104.461 | 86.272 | 1.098 | 87.370 | 42.80 | 16.56 | 4.26 | 91.63 | .00 | 2.04 | 3.25 | 3.500 | .000 | .00 | 1 .0 |
| 20.281 | .0543 | | | | | .0372 | .75 | 1.10 | 3.27 | 1.01 | .013 | .00 | .00 | PIPE |
| 124.742 | 87.374 | 1.137 | 88.511 | 42.80 | 15.79 | 3.87 | 92.38 | .00 | 2.04 | 3.28 | 3.500 | .000 | .00 | 1 .0 |
| 14.328 | .0543 | | | | | .0326 | .47 | 1.14 | 3.06 | 1.01 | .013 | .00 | .00 | PIPE |
| 139.070 | 88.152 | 1.177 | 89.329 | 42.80 | 15.05 | 3.52 | 92.85 | .00 | 2.04 | 3.31 | 3.500 | .000 | .00 | 1 .0 |
| 10.772 | .0543 | | | | | .0285 | .31 | 1.18 | 2.86 | 1.01 | .013 | .00 | .00 | PIPE |
| 149.842 | 88.738 | 1.219 | 89.957 | 42.80 | 14.35 | 3.20 | 93.16 | .00 | 2.04 | 3.34 | 3.500 | .000 | .00 | 1 .0 |
| 8.451 | .0543 | | | | | .0250 | .21 | 1.22 | 2.68 | 1.01 | .013 | .00 | .00 | PIPE |
| 158.293 | 89.197 | 1.262 | 90.459 | 42.80 | 13.69 | 2.91 | 93.37 | .00 | 2.04 | 3.36 | 3.500 | .000 | .00 | 1 .0 |
| 6.769 | .0543 | | | | | .0219 | .15 | 1.26 | 2.50 | 1.01 | .013 | .00 | .00 | PIPE |
| 165.062 | 89.564 | 1.307 | 90.871 | 42.80 | 13.05 | 2.64 | 93.52 | .00 | 2.04 | 3.39 | 3.500 | .000 | .00 | 1 .0 |
| 5.480 | .0543 | | | | | .0192 | .11 | 1.31 | 2.34 | 1.01 | .013 | .00 | .00 | PIPE |

Velocity at pipe outlet

2468 QUARRY CREEK
LINE 4 PER DWG 470-5A
PROPOSED Q

| Station / L/Elem | Invert Elev / Ch Slope | Depth (FT) | Water Elev | Q (CFS) | Vel (FPS) | Vel Head / SF Ave | Energy Grd.El. / HF | Super Elev / SE Dpth | Critical Depth / Froude N | Flow Top Width / Norm Dp | Height/ Dia.-FT / "N" | Base Wt or I.D. / X-Fall | ZL / ZR | No Wth Prs/Pip / Type Ch |
|---|---|---|---|---|---|---|---|---|---|---|---|---|---|---|
| 170.543 | 89.862 | 1.355 | 91.217 | 42.80 | 12.44 | 2.40 | 93.62 | .00 | 2.04 | 3.41 | 3.500 | .000 | .00 | 1 .0 |
| 4.526 | .0543 | | | | | .0169 | .08 | 1.36 | 2.18 | 1.01 | .013 | .00 | .00 | PIPE |
| 175.068 | 90.108 | 1.404 | 91.512 | 42.80 | 11.86 | 2.19 | 93.70 | .00 | 2.04 | 3.43 | 3.500 | .000 | .00 | 1 .0 |
| 3.736 | .0543 | | | | | .0148 | .06 | 1.40 | 2.04 | 1.01 | .013 | .00 | .00 | PIPE |
| 178.804 | 90.311 | 1.455 | 91.766 | 42.80 | 11.31 | 1.99 | 93.75 | .00 | 2.04 | 3.45 | 3.500 | .000 | .00 | 1 .0 |
| 3.087 | .0543 | | | | | .0130 | .04 | 1.46 | 1.90 | 1.01 | .013 | .00 | .00 | PIPE |
| 181.892 | 90.479 | 1.508 | 91.987 | 42.80 | 10.78 | 1.81 | 93.79 | .00 | 2.04 | 3.47 | 3.500 | .000 | .00 | 1 .0 |
| 2.521 | .0543 | | | | | .0114 | .03 | 1.51 | 1.78 | 1.01 | .013 | .00 | .00 | PIPE |
| 184.413 | 90.616 | 1.564 | 92.180 | 42.80 | 10.28 | 1.64 | 93.82 | .00 | 2.04 | 3.48 | 3.500 | .000 | .00 | 1 .0 |
| 2.060 | .0543 | | | | | .0100 | .02 | 1.56 | 1.66 | 1.01 | .013 | .00 | .00 | PIPE |
| 186.473 | 90.727 | 1.622 | 92.350 | 42.80 | 9.80 | 1.49 | 93.84 | .00 | 2.04 | 3.49 | 3.500 | .000 | .00 | 1 .0 |
| 1.641 | .0543 | | | | | .0088 | .01 | 1.62 | 1.54 | 1.01 | .013 | .00 | .00 | PIPE |
| 188.115 | 90.817 | 1.683 | 92.500 | 42.80 | 9.35 | 1.36 | 93.86 | .00 | 2.04 | 3.50 | 3.500 | .000 | .00 | 1 .0 |
| 1.275 | .0543 | | | | | .0078 | .01 | 1.68 | 1.44 | 1.01 | .013 | .00 | .00 | PIPE |
| 189.390 | 90.886 | 1.747 | 92.633 | 42.80 | 8.91 | 1.23 | 93.87 | .00 | 2.04 | 3.50 | 3.500 | .000 | .00 | 1 .0 |
| .951 | .0543 | | | | | .0068 | .01 | 1.75 | 1.34 | 1.01 | .013 | .00 | .00 | PIPE |
| 190.340 | 90.938 | 1.814 | 92.752 | 42.80 | 8.50 | 1.12 | 93.87 | .00 | 2.04 | 3.50 | 3.500 | .000 | .00 | 1 .0 |
| .661 | .0543 | | | | | .0060 | .00 | 1.81 | 1.25 | 1.01 | .013 | .00 | .00 | PIPE |

2468 QUARRY CREEK
LINE 4 PER DWG 470-5A
PROPOSED Q

| Station / L/Elem | Invert Elev / Ch Slope | Depth (FT) | Water Elev | Q (CFS) | Vel (FPS) | Vel Head / SF Ave | Energy Grd.El. / HF | Super Elev / SE Dpth | Critical Depth / Froude N | Flow Top Width / Norm Dp | Height/ Dia.-FT / "N" | Base Wt or I.D. / X-Fall | ZL / ZR | No Wth Prs/Pip / Type Ch |
|---|---|---|---|---|---|---|---|---|---|---|---|---|---|---|
| 191.001 | 90.973 | 1.884 | 92.858 | 42.80 | 8.10 | 1.02 | 93.88 | .00 | 2.04 | 3.49 | 3.500 | .000 | .00 | 1 .0 |
| .381 | .0543 | | | | | .0053 | .00 | 1.88 | 1.16 | 1.01 | .013 | .00 | .00 | PIPE |
| 191.382 | 90.994 | 1.958 | 92.952 | 42.80 | 7.73 | .93 | 93.88 | .00 | 2.04 | 3.48 | 3.500 | .000 | .00 | 1 .0 |
| .108 | .0543 | | | | | .0047 | .00 | 1.96 | 1.08 | 1.01 | .013 | .00 | .00 | PIPE |
| WALL ENTRANCE | | | | | | | | | | | | | | |
| 191.490 | 91.000 | 2.039 | 93.039 | 42.80 | 7.36 | .84 | 93.88 | .00 | 2.04 | 3.45 | 3.500 | .000 | .00 | 0 .0 |

Program Package Serial Number: 1355

WATER SURFACE PROFILE LISTING Date:10- 2-2012 Time: 6:45:14

2468 QUARRY CREEK
LINE 5 PER DWG 470-5A
PROPOSED Q

| Station / L/Elem | Invert Elev / Ch Slope | Depth (FT) | Water Elev | Q (CFS) | Vel (FPS) | Vel Head / SF Ave | Energy Grd.El. / HF | Super Elev / SE Dpth | Critical Depth / Froude N | Flow Top Width / Norm Dp | Height/ Dia.-FT / "N" | Base Wt or I.D. / X-Fall | ZL / ZR | No Wth Prs/Pip / Type Ch |
|---|---|---|---|---|---|---|---|---|---|---|---|---|---|---|
| 66.450 | 71.070 | 1.583 | 72.653 | 79.60 | 5.75 | .51 | 73.17 | .00 | 1.58 | 13.50 | 1.000 | 4.000 | 3.00 | 0 .0 |
| .125 | .0054 | | | | | .0289 | .00 | 1.58 | 1.00 | 2.37 | .045 | .00 | 3.00 | TRAP |
| 66.575 | 71.071 | 1.633 | 72.703 | 79.60 | 5.48 | .47 | 73.17 | .00 | 1.58 | 13.80 | 1.000 | 4.000 | 3.00 | 0 .0 |
| .424 | .0054 | | | | | .0254 | .01 | 1.63 | .94 | 2.37 | .045 | .00 | 3.00 | TRAP |
| 66.999 | 71.073 | 1.684 | 72.757 | 79.60 | 5.22 | .42 | 73.18 | .00 | 1.58 | 14.10 | 1.000 | 4.000 | 3.00 | 0 .0 |
| .808 | .0054 | | | | | .0223 | .02 | 1.68 | .89 | 2.37 | .045 | .00 | 3.00 | TRAP |
| 67.807 | 71.077 | 1.736 | 72.813 | 79.60 | 4.98 | .39 | 73.20 | .00 | 1.58 | 14.41 | 1.000 | 4.000 | 3.00 | 0 .0 |
| 1.305 | .0054 | | | | | .0196 | .03 | 1.74 | .83 | 2.37 | .045 | .00 | 3.00 | TRAP |
| 69.112 | 71.084 | 1.789 | 72.874 | 79.60 | 4.75 | .35 | 73.22 | .00 | 1.58 | 14.74 | 1.000 | 4.000 | 3.00 | 0 .0 |
| 1.954 | .0054 | | | | | .0172 | .03 | 1.79 | .78 | 2.37 | .045 | .00 | 3.00 | TRAP |
| 71.066 | 71.095 | 1.844 | 72.939 | 79.60 | 4.53 | .32 | 73.26 | .00 | 1.58 | 15.06 | 1.000 | 4.000 | 3.00 | 0 .0 |
| 2.817 | .0054 | | | | | .0151 | .04 | 1.84 | .74 | 2.37 | .045 | .00 | 3.00 | TRAP |
| 73.883 | 71.110 | 1.900 | 73.011 | 79.60 | 4.32 | .29 | 73.30 | .00 | 1.58 | 15.40 | 1.000 | 4.000 | 3.00 | 0 .0 |
| 3.989 | .0054 | | | | | .0133 | .05 | 1.90 | .70 | 2.37 | .045 | .00 | 3.00 | TRAP |
| 77.872 | 71.132 | 1.958 | 73.090 | 79.60 | 4.12 | .26 | 73.35 | .00 | 1.58 | 15.75 | 1.000 | 4.000 | 3.00 | 0 .0 |
| 5.628 | .0054 | | | | | .0117 | .07 | 1.96 | .65 | 2.37 | .045 | .00 | 3.00 | TRAP |
| 83.500 | 71.163 | 2.018 | 73.180 | 79.60 | 3.92 | .24 | 73.42 | .00 | 1.58 | 16.11 | 1.000 | 4.000 | 3.00 | 0 .0 |
| 1.649 | .0054 | | | | | .0108 | .02 | 2.02 | .62 | 2.37 | .045 | .00 | 3.00 | TRAP |

2468 QUARRY CREEK
LINE 5 PER DWG 470-5A
PROPOSED Q

| Station / L/Elem | Invert Elev / Ch Slope | Depth (FT) | Water Elev | Q (CFS) | Vel (FPS) | Vel Head / SF Ave | Energy Grd.El. / HF | Super Elev / SE Dpth | Critical Depth / Froude N | Flow Top Width / Norm Dp | Height/ Dia.-FT / "N" | Base Wt or I.D. / X-Fall | ZL / ZR | No Wth Prs/Pip / Type Ch |
|---|---|---|---|---|---|---|---|---|---|---|---|---|---|---|
| 85.148 | 71.171 | 2.030 | 73.202 | 79.60 | 3.89 | .23 | 73.44 | .00 | 1.58 | 16.18 | 1.000 | 4.000 | 3.00 | 0 .0 |
| HYDRAULIC JUMP | | | | | | | | | | | | | | |
| 85.148 | 71.171 | 1.198 | 72.369 | 79.60 | 8.75 | 1.19 | 73.56 | .00 | 1.58 | 11.19 | 1.000 | 4.000 | 3.00 | 0 .0 |
| .093 | .0054 | | | | | .0977 | .01 | 1.20 | 1.71 | 2.37 | .045 | .00 | 3.00 | TRAP |
| 85.242 | 71.172 | 1.193 | 72.365 | 79.60 | 8.80 | 1.20 | 73.57 | .00 | 1.58 | 11.16 | 1.000 | 4.000 | 3.00 | 0 .0 |
| .823 | .0054 | | | | | .1052 | .09 | 1.19 | 1.72 | 2.37 | .045 | .00 | 3.00 | TRAP |
| 86.065 | 71.176 | 1.155 | 72.332 | 79.60 | 9.23 | 1.32 | 73.65 | .00 | 1.58 | 10.93 | 1.000 | 4.000 | 3.00 | 0 .0 |
| .831 | .0054 | | | | | .1199 | .10 | 1.16 | 1.83 | 2.37 | .045 | .00 | 3.00 | TRAP |
| 86.896 | 71.181 | 1.118 | 72.299 | 79.60 | 9.68 | 1.46 | 73.75 | .00 | 1.58 | 10.71 | 1.000 | 4.000 | 3.00 | 0 .0 |
| .833 | .0054 | | | | | .1367 | .11 | 1.12 | 1.95 | 2.37 | .045 | .00 | 3.00 | TRAP |
| 87.730 | 71.185 | 1.082 | 72.267 | 79.60 | 10.15 | 1.60 | 73.87 | .00 | 1.58 | 10.49 | 1.000 | 4.000 | 3.00 | 0 .0 |
| .830 | .0054 | | | | | .1559 | .13 | 1.08 | 2.07 | 2.37 | .045 | .00 | 3.00 | TRAP |
| 88.560 | 71.190 | 1.047 | 72.237 | 79.60 | 10.65 | 1.76 | 74.00 | .00 | 1.58 | 10.28 | 1.000 | 4.000 | 3.00 | 0 .0 |
| .406 | .0040 | | | | | .1348 | .05 | 1.05 | 2.20 | 2.41 | .040 | .00 | 3.00 | TRAP |
| 88.966 | 71.192 | 1.033 | 72.225 | 79.60 | 10.85 | 1.83 | 74.05 | .00 | 1.58 | 10.20 | 1.000 | 4.000 | 3.00 | 0 .0 |
| 1.035 | .0040 | | | | | .1480 | .15 | 1.03 | 2.26 | 2.41 | .040 | .00 | 3.00 | TRAP |
| 90.001 | 71.196 | .999 | 72.195 | 79.60 | 11.38 | 2.01 | 74.21 | .00 | 1.58 | 10.00 | 1.000 | 4.000 | 3.00 | 0 .0 |
| 1.021 | .0040 | | | | | .1689 | .17 | 1.00 | 2.40 | 2.41 | .040 | .00 | 3.00 | TRAP |

Program Package Serial Number: 1355

WATER SURFACE PROFILE LISTING

Date:10- 2-2012 Time: 6:45:14

2468 QUARRY CREEK
LINE 5 PER DWG 470-5A
PROPOSED Q

| Station / L/Elem | Invert Elev / Ch Slope | Depth (FT) | Water Elev | Q (CFS) | Vel (FPS) | Vel Head / SF Ave | Energy Grd.El. / HF | Super Elev / SE Dpth | Critical Depth / Froude N | Flow Top Width / Norm Dp | Height/ Dia.-FT / "N" | Base Wt or I.D. / X-Fall | ZL / ZR | No Wth Prs/Pip / Type Ch |
|---|---|---|---|---|---|---|---|---|---|---|---|---|---|---|
| 91.022 | 71.200 | .966 | 72.166 | 79.60 | 11.94 | 2.21 | 74.38 | .00 | 1.58 | 9.80 | 1.000 | 4.000 | 3.00 | 0 .0 |
| 1.004 | .0040 | | | | | .1926 | .19 | .97 | 2.55 | 2.41 | .040 | .00 | 3.00 | TRAP |
| 92.026 | 71.204 | .934 | 72.138 | 79.60 | 12.52 | 2.43 | 74.57 | .00 | 1.58 | 9.61 | 1.000 | 4.000 | 3.00 | 0 .0 |
| .984 | .0040 | | | | | .2198 | .22 | .93 | 2.71 | 2.41 | .040 | .00 | 3.00 | TRAP |
| 93.010 | 71.208 | .903 | 72.111 | 79.60 | 13.13 | 2.68 | 74.79 | .00 | 1.58 | 9.42 | 1.000 | 4.000 | 3.00 | 0 .0 |
| .962 | .0040 | | | | | .2509 | .24 | .90 | 2.89 | 2.41 | .040 | .00 | 3.00 | TRAP |
| 93.972 | 71.212 | .873 | 72.085 | 79.60 | 13.77 | 2.95 | 75.03 | .00 | 1.58 | 9.24 | 1.000 | 4.000 | 3.00 | 0 .0 |
| .939 | .0040 | | | | | .2865 | .27 | .87 | 3.07 | 2.41 | .040 | .00 | 3.00 | TRAP |
| 94.911 | 71.215 | .844 | 72.059 | 79.60 | 14.45 | 3.24 | 75.30 | .00 | 1.58 | 9.06 | 1.000 | 4.000 | 3.00 | 0 .0 |
| .915 | .0040 | | | | | .3271 | .30 | .84 | 3.26 | 2.41 | .040 | .00 | 3.00 | TRAP |
| 95.825 | 71.219 | .815 | 72.034 | 79.60 | 15.15 | 3.56 | 75.60 | .00 | 1.58 | 8.89 | 1.000 | 4.000 | 3.00 | 0 .0 |
| .889 | .0040 | | | | | .3736 | .33 | .82 | 3.47 | 2.41 | .040 | .00 | 3.00 | TRAP |
| 96.715 | 71.223 | .787 | 72.010 | 79.60 | 15.89 | 3.92 | 75.93 | .00 | 1.58 | 8.72 | 1.000 | 4.000 | 3.00 | 0 .0 |
| .864 | .0040 | | | | | .4268 | .37 | .79 | 3.70 | 2.41 | .040 | .00 | 3.00 | TRAP |
| 97.578 | 71.226 | .760 | 71.986 | 79.60 | 16.67 | 4.31 | 76.30 | .00 | 1.58 | 8.56 | 1.000 | 4.000 | 3.00 | 0 .0 |
| .837 | .0040 | | | | | .4877 | .41 | .76 | 3.93 | 2.41 | .040 | .00 | 3.00 | TRAP |
| 98.416 | 71.229 | .734 | 71.964 | 79.60 | 17.48 | 4.74 | 76.71 | .00 | 1.58 | 8.41 | 1.000 | 4.000 | 3.00 | 0 .0 |
| .811 | .0040 | | | | | .5575 | .45 | .73 | 4.18 | 2.41 | .040 | .00 | 3.00 | TRAP |

Program Package Serial Number: 1355

WATER SURFACE PROFILE LISTING Date:10- 2-2012 Time: 6:45:14

2468 QUARRY CREEK
LINE 5 PER DWG 470-5A
PROPOSED Q

| Station / L/Elem | Invert Elev / Ch Slope | Depth (FT) | Water Elev | Q (CFS) | Vel (FPS) | Vel Head / SF Ave | Energy Grd.El. / HF | Super Elev / SE Dpth | Critical Depth / Froude N | Flow Top Width / Norm Dp | Height/ Dia.-FT / "N" | Base Wt or I.D. / X-Fall | ZL / ZR | No Wth Prs/Pip / Type Ch |
|---|---|---|---|---|---|---|---|---|---|---|---|---|---|---|
| 99.227 | 71.233 | .709 | 71.941 | 79.60 | 18.33 | 5.22 | 77.16 | .00 | 1.58 | 8.25 | 1.000 | 4.000 | 3.00 | 0 .0 |
| .785 | .0040 | | | | | .6374 | .50 | .71 | 4.45 | 2.41 | .040 | .00 | 3.00 | TRAP |
| 100.012 | 71.236 | .684 | 71.920 | 79.60 | 19.23 | 5.74 | 77.66 | .00 | 1.58 | 8.10 | 1.000 | 4.000 | 3.00 | 0 .0 |
| .759 | .0040 | | | | | .7289 | .55 | .68 | 4.74 | 2.41 | .040 | .00 | 3.00 | TRAP |
| 100.771 | 71.239 | .660 | 71.899 | 79.60 | 20.17 | 6.31 | 78.21 | .00 | 1.58 | 7.96 | 1.000 | 4.000 | 3.00 | 0 .0 |
| .733 | .0040 | | | | | .8338 | .61 | .66 | 5.05 | 2.41 | .040 | .00 | 3.00 | TRAP |
| 101.503 | 71.242 | .637 | 71.879 | 79.60 | 21.15 | 6.95 | 78.82 | .00 | 1.58 | 7.82 | 1.000 | 4.000 | 3.00 | 0 .0 |
| .707 | .0040 | | | | | .9541 | .67 | .64 | 5.37 | 2.41 | .040 | .00 | 3.00 | TRAP |
| 102.211 | 71.245 | .614 | 71.859 | 79.60 | 22.18 | 7.64 | 79.50 | .00 | 1.58 | 7.69 | 1.000 | 4.000 | 3.00 | 0 .0 |
| .682 | .0040 | | | | | 1.0921 | .74 | .61 | 5.72 | 2.41 | .040 | .00 | 3.00 | TRAP |
| WARNING: POSSIBLE ERROR IN CALCULATIONS, PROGRAM USES MANNINGS, EQUATION, AVERAGE FRICTION SLOPE = 1.09213 | | | | | | | | | | | | | | |
| 102.893 | 71.247 | .592 | 71.840 | 79.60 | 23.27 | 8.40 | 80.24 | .00 | 1.58 | 7.55 | 1.000 | 4.000 | 3.00 | 0 .0 |
| .657 | .0040 | | | | | 1.2504 | .82 | .59 | 6.09 | 2.41 | .040 | .00 | 3.00 | TRAP |
| WARNING: POSSIBLE ERROR IN CALCULATIONS, PROGRAM USES MANNINGS, EQUATION, AVERAGE FRICTION SLOPE = 1.25043 | | | | | | | | | | | | | | |
| 103.550 | 71.250 | .571 | 71.821 | 79.60 | 24.40 | 9.25 | 81.07 | .00 | 1.58 | 7.43 | 1.000 | 4.000 | 3.00 | 0 .0 |
| TRANS STR | 1.0008 | | | | | 1.0161 | .01 | .57 | 6.49 | | .040 | .00 | 3.00 | TRAP |
| WARNING: POSSIBLE ERROR IN CALCULATIONS, PROGRAM USES MANNINGS, EQUATION, AVERAGE FRICTION SLOPE = 1.01614 | | | | | | | | | | | | | | |
| 103.560 | 71.260 | 1.133 | 72.393 | 79.60 | 23.83 | 8.82 | 81.21 | .00 | 2.53 | 4.19 | 5.000 | .000 | .00 | 1 .0 |
| 10.348 | .0050 | | | | | .0784 | .81 | 1.13 | 4.70 | 2.30 | .013 | .00 | .00 | PIPE |
| 113.908 | 71.312 | 1.099 | 72.411 | 79.60 | 24.87 | 9.60 | 82.01 | .00 | 2.53 | 4.14 | 5.000 | .000 | .00 | 1 .0 |

Velocity at pipe outfall

| | | | | | | | | | | | | |
|---|---|---|---|---|---|---|---|---|---|---|---|---|
| 10.998 | .0050 | | .0891 | .98 | 1.10 | 4.99 | 2.30 | .013 | .00 | .00 | PIPE |

2468 QUARRY CREEK
LINE 5 PER DWG 470-5A
PROPOSED Q

| Station / L/Elem | Invert Elev / Ch Slope | Depth (FT) | Water Elev | Q (CFS) | Vel (FPS) | Vel Head / SF Ave | Energy Grd.El. / HF | Super Elev / SE Dpth | Critical Depth / Froude N | Flow Top Width / Norm Dp | Height/ Dia.-FT / "N" | Base Wt or I.D. / X-Fall | ZL / ZR | No Wth Prs/Pip / Type Ch |
|---|---|---|---|---|---|---|---|---|---|---|---|---|---|---|
| 124.906 | 71.367 | 1.063 | 72.430 | 79.60 | 26.08 | 10.56 | 82.99 | .00 | 2.53 | 4.09 | 5.000 | .000 | .00 | 1 .0 |
| 10.542 | .0050 | | | | | .1019 | 1.07 | 1.06 | 5.32 | 2.30 | .013 | .00 | .00 | PIPE |
| 135.448 | 71.419 | 1.028 | 72.448 | 79.60 | 27.36 | 11.62 | 84.07 | .00 | 2.53 | 4.04 | 5.000 | .000 | .00 | 1 .0 |
| 10.112 | .0050 | | | | | .1166 | 1.18 | 1.03 | 5.68 | 2.30 | .013 | .00 | .00 | PIPE |
| 145.560 | 71.470 | .995 | 72.465 | 79.60 | 28.69 | 12.78 | 85.25 | .00 | 2.53 | 3.99 | 5.000 | .000 | .00 | 1 .0 |
| 4.000 | .0825 | | | | | .1257 | .50 | .99 | 6.07 | 1.10 | .013 | .00 | .00 | PIPE |
| 149.560 | 71.800 | .990 | 72.790 | 79.60 | 28.89 | 12.96 | 85.75 | .00 | 2.53 | 3.98 | 5.000 | .000 | .00 | 1 .0 |
| 5.083 | .3314 | | | | | .1195 | .61 | .99 | 6.12 | .78 | .013 | .00 | .00 | PIPE |
| 154.643 | 73.484 | 1.021 | 74.505 | 79.60 | 27.64 | 11.86 | 86.37 | .00 | 2.53 | 4.03 | 5.000 | .000 | .00 | 1 .0 |
| 4.611 | .3314 | | | | | .1049 | .48 | 1.02 | 5.76 | .78 | .013 | .00 | .00 | PIPE |
| 159.254 | 75.012 | 1.055 | 76.067 | 79.60 | 26.35 | 10.78 | 86.85 | .00 | 2.53 | 4.08 | 5.000 | .000 | .00 | 1 .0 |
| 3.939 | .3314 | | | | | .0917 | .36 | 1.06 | 5.40 | .78 | .013 | .00 | .00 | PIPE |
| 163.193 | 76.318 | 1.091 | 77.409 | 79.60 | 25.13 | 9.80 | 87.21 | .00 | 2.53 | 4.13 | 5.000 | .000 | .00 | 1 .0 |
| 3.400 | .3314 | | | | | .0801 | .27 | 1.09 | 5.06 | .78 | .013 | .00 | .00 | PIPE |
| 166.593 | 77.444 | 1.128 | 78.572 | 79.60 | 23.96 | 8.91 | 87.48 | .00 | 2.53 | 4.18 | 5.000 | .000 | .00 | 1 .0 |
| 2.951 | .3314 | | | | | .0700 | .21 | 1.13 | 4.74 | .78 | .013 | .00 | .00 | PIPE |
| 169.543 | 78.422 | 1.167 | 79.589 | 79.60 | 22.84 | 8.10 | 87.69 | .00 | 2.53 | 4.23 | 5.000 | .000 | .00 | 1 .0 |
| 2.578 | .3314 | | | | | .0612 | .16 | 1.17 | 4.44 | .78 | .013 | .00 | .00 | PIPE |

2468 QUARRY CREEK
LINE 5 PER DWG 470-5A
PROPOSED Q

| Station / L/Elem | Invert Elev / Ch Slope | Depth (FT) | Water Elev | Q (CFS) | Vel (FPS) | Vel Head / SF Ave | Energy Grd.El. / HF | Super Elev / SE Dpth | Critical Depth / Froude N | Flow Top Width / Norm Dp | Height/ Dia.-FT / "N" | Base Wt or I.D. / X-Fall | ZL / ZR | No Wth Prs/Pip / Type Ch |
|---|---|---|---|---|---|---|---|---|---|---|---|---|---|---|
| 172.122 | 79.277 | 1.207 | 80.484 | 79.60 | 21.78 | 7.37 | 87.85 | .00 | 2.53 | 4.28 | 5.000 | .000 | .00 | 1 .0 |
| 2.262 | .3314 | | | | | .0536 | .12 | 1.21 | 4.15 | .78 | .013 | .00 | .00 | PIPE |
| 174.384 | 80.026 | 1.248 | 81.275 | 79.60 | 20.77 | 6.70 | 87.97 | .00 | 2.53 | 4.33 | 5.000 | .000 | .00 | 1 .0 |
| 1.988 | .3314 | | | | | .0468 | .09 | 1.25 | 3.89 | .78 | .013 | .00 | .00 | PIPE |
| 176.372 | 80.685 | 1.291 | 81.976 | 79.60 | 19.80 | 6.09 | 88.06 | .00 | 2.53 | 4.38 | 5.000 | .000 | .00 | 1 .0 |
| 1.750 | .3314 | | | | | .0410 | .07 | 1.29 | 3.64 | .78 | .013 | .00 | .00 | PIPE |
| 178.123 | 81.265 | 1.336 | 82.601 | 79.60 | 18.88 | 5.53 | 88.14 | .00 | 2.53 | 4.43 | 5.000 | .000 | .00 | 1 .0 |
| 1.547 | .3314 | | | | | .0358 | .06 | 1.34 | 3.41 | .78 | .013 | .00 | .00 | PIPE |
| 179.669 | 81.778 | 1.382 | 83.160 | 79.60 | 18.00 | 5.03 | 88.19 | .00 | 2.53 | 4.47 | 5.000 | .000 | .00 | 1 .0 |
| 1.364 | .3314 | | | | | .0314 | .04 | 1.38 | 3.19 | .78 | .013 | .00 | .00 | PIPE |
| 181.034 | 82.230 | 1.430 | 83.660 | 79.60 | 17.16 | 4.57 | 88.23 | .00 | 2.53 | 4.52 | 5.000 | .000 | .00 | 1 .0 |
| 1.203 | .3314 | | | | | .0275 | .03 | 1.43 | 2.99 | .78 | .013 | .00 | .00 | PIPE |
| 182.237 | 82.629 | 1.480 | 84.109 | 79.60 | 16.36 | 4.16 | 88.27 | .00 | 2.53 | 4.56 | 5.000 | .000 | .00 | 1 .0 |
| 1.061 | .3314 | | | | | .0240 | .03 | 1.48 | 2.79 | .78 | .013 | .00 | .00 | PIPE |
| 183.298 | 82.980 | 1.532 | 84.512 | 79.60 | 15.60 | 3.78 | 88.29 | .00 | 2.53 | 4.61 | 5.000 | .000 | .00 | 1 .0 |
| .936 | .3314 | | | | | .0210 | .02 | 1.53 | 2.61 | .78 | .013 | .00 | .00 | PIPE |
| 184.234 | 83.290 | 1.585 | 84.876 | 79.60 | 14.88 | 3.44 | 88.31 | .00 | 2.53 | 4.65 | 5.000 | .000 | .00 | 1 .0 |
| .819 | .3314 | | | | | .0184 | .02 | 1.59 | 2.44 | .78 | .013 | .00 | .00 | PIPE |

2468 QUARRY CREEK
LINE 5 PER DWG 470-5A
PROPOSED Q

| Station / L/Elem | Invert Elev / Ch Slope | Depth (FT) | Water Elev | Q (CFS) | Vel (FPS) | Vel Head / SF Ave | Energy Grd.El. / HF | Super Elev / SE Dpth | Critical Depth / Froude N | Flow Top Width / Norm Dp | Height/ Dia.-FT / "N" | Base Wt or I.D. / X-Fall | ZL / ZR | No Wth Prs/Pip / Type Ch |
|---|---|---|---|---|---|---|---|---|---|---|---|---|---|---|
| 185.053 | 83.562 | 1.641 | 85.203 | 79.60 | 14.18 | 3.12 | 88.33 | .00 | 2.53 | 4.70 | 5.000 | .000 | .00 | 1 .0 |
| .717 | .3314 | | | | | .0161 | .01 | 1.64 | 2.29 | .78 | .013 | .00 | .00 | PIPE |
| 185.770 | 83.799 | 1.699 | 85.499 | 79.60 | 13.52 | 2.84 | 88.34 | .00 | 2.53 | 4.74 | 5.000 | .000 | .00 | 1 .0 |
| .621 | .3314 | | | | | .0141 | .01 | 1.70 | 2.14 | .78 | .013 | .00 | .00 | PIPE |
| 186.391 | 84.005 | 1.760 | 85.765 | 79.60 | 12.89 | 2.58 | 88.35 | .00 | 2.53 | 4.78 | 5.000 | .000 | .00 | 1 .0 |
| .538 | .3314 | | | | | .0124 | .01 | 1.76 | 2.00 | .78 | .013 | .00 | .00 | PIPE |
| 186.930 | 84.184 | 1.823 | 86.007 | 79.60 | 12.29 | 2.35 | 88.35 | .00 | 2.53 | 4.81 | 5.000 | .000 | .00 | 1 .0 |
| .463 | .3314 | | | | | .0109 | .01 | 1.82 | 1.87 | .78 | .013 | .00 | .00 | PIPE |
| 187.392 | 84.337 | 1.888 | 86.225 | 79.60 | 11.72 | 2.13 | 88.36 | .00 | 2.53 | 4.85 | 5.000 | .000 | .00 | 1 .0 |
| .391 | .3314 | | | | | .0095 | .00 | 1.89 | 1.75 | .78 | .013 | .00 | .00 | PIPE |
| 187.784 | 84.467 | 1.956 | 86.423 | 79.60 | 11.18 | 1.94 | 88.36 | .00 | 2.53 | 4.88 | 5.000 | .000 | .00 | 1 .0 |
| .326 | .3314 | | | | | .0084 | .00 | 1.96 | 1.63 | .78 | .013 | .00 | .00 | PIPE |
| 188.110 | 84.575 | 2.027 | 86.602 | 79.60 | 10.66 | 1.76 | 88.37 | .00 | 2.53 | 4.91 | 5.000 | .000 | .00 | 1 .0 |
| .266 | .3314 | | | | | .0073 | .00 | 2.03 | 1.52 | .78 | .013 | .00 | .00 | PIPE |
| 188.376 | 84.663 | 2.101 | 86.764 | 79.60 | 10.16 | 1.60 | 88.37 | .00 | 2.53 | 4.94 | 5.000 | .000 | .00 | 1 .0 |
| .208 | .3314 | | | | | .0065 | .00 | 2.10 | 1.42 | .78 | .013 | .00 | .00 | PIPE |
| 188.584 | 84.732 | 2.179 | 86.911 | 79.60 | 9.69 | 1.46 | 88.37 | .00 | 2.53 | 4.96 | 5.000 | .000 | .00 | 1 .0 |
| .161 | .3314 | | | | | .0057 | .00 | 2.18 | 1.33 | .78 | .013 | .00 | .00 | PIPE |

2468 QUARRY CREEK
LINE 5 PER DWG 470-5A
PROPOSED Q

| Station / L/Elem | Invert Elev / Ch Slope | Depth (FT) | Water Elev | Q (CFS) | Vel (FPS) | Vel Head / SF Ave | Energy Grd.El. / HF | Super Elev / SE Dpth | Critical Depth / Froude N | Flow Top Width / Norm Dp | Height/ Dia.-FT / "N" | Base Wt or I.D. / X-Fall | ZL / ZR | No Wth Prs/Pip / Type Ch |
|---|---|---|---|---|---|---|---|---|---|---|---|---|---|---|
| 188.746 | 84.786 | 2.259 | 87.045 | 79.60 | 9.24 | 1.32 | 88.37 | .00 | 2.53 | 4.98 | 5.000 | .000 | .00 | 1 .0 |
| .109 | .3314 | | | | | .0050 | .00 | 2.26 | 1.24 | .78 | .013 | .00 | .00 | PIPE |
| 188.854 | 84.822 | 2.344 | 87.166 | 79.60 | 8.81 | 1.20 | 88.37 | .00 | 2.53 | 4.99 | 5.000 | .000 | .00 | 1 .0 |
| .066 | .3314 | | | | | .0044 | .00 | 2.34 | 1.15 | .78 | .013 | .00 | .00 | PIPE |
| 188.920 | 84.843 | 2.432 | 87.275 | 79.60 | 8.40 | 1.09 | 88.37 | .00 | 2.53 | 5.00 | 5.000 | .000 | .00 | 1 .0 |
| .020 | .3314 | | | | | .0039 | .00 | 2.43 | 1.07 | .78 | .013 | .00 | .00 | PIPE |
| WALL ENTRANCE | | | | | | | | | | | | | | |
| 188.940 | 84.850 | 2.527 | 87.377 | 79.60 | 8.00 | .99 | 88.37 | .00 | 2.53 | 5.00 | 5.000 | .000 | .00 | 0 .0 |

Program Package Serial Number: 1355

WATER SURFACE PROFILE LISTING Date: 2-28-2012 Time: 7:14:22

2468 QUARRY CREEK
LINE A - OPTION 1
PR CONDITION Q100-ASSUMING COINCIDENT PEAKS

| Station / L/Elem | Invert Elev / Ch Slope | Depth (FT) | Water Elev | Q (CFS) | Vel (FPS) | Vel Head / SF Ave | Energy Grd.El. / HF | Super Elev / SE Dpth | Critical Depth / Froude N | Flow Top Width / Norm Dp | Height/ Dia.-FT / "N" | Base Wt or I.D. / X-Fall | ZL / ZR | No Wth Prs/Pip / Type Ch |
|---|---|---|---|---|---|---|---|---|---|---|---|---|---|---|
| 100.000 | 84.600 | 4.660 | 89.260 | 297.60 | 15.62 | 3.79 | 93.05 | .00 | 4.66 | 2.52 | 5.000 | .000 | .00 | 1 .0 |
| 31.150 | .0096 | | | | | .0115 | .36 | 4.66 | 1.00 | 5.00 | .013 | .00 | .00 | PIPE |
| 131.150 | 84.900 | 4.909 | 89.809 | 297.60 | 15.22 | 3.60 | 93.41 | .00 | 4.66 | 1.34 | 5.000 | .000 | .00 | 1 .0 |
| JUNCT STR | .1250 | | | | | .0114 | .05 | 4.91 | .70 | | .013 | .00 | .00 | PIPE |
| 135.150 | 85.400 | 7.651 | 93.051 | 207.40 | 13.04 | 2.64 | 95.69 | .00 | 4.08 | .00 | 4.500 | .000 | .00 | 1 .0 |
| 306.098 | .0185 | | | | | .0111 | 3.40 | 7.65 | .00 | 2.98 | .013 | .00 | .00 | PIPE |
| 441.248 | 91.053 | 5.402 | 96.455 | 207.40 | 13.04 | 2.64 | 99.10 | .00 | 4.08 | .00 | 4.500 | .000 | .00 | 1 .0 |
| HYDRAULIC JUMP | | | | | | | | | | | | | | |
| 441.248 | 91.053 | 2.979 | 94.032 | 207.40 | 18.56 | 5.35 | 99.38 | .00 | 4.08 | 4.26 | 4.500 | .000 | .00 | 1 .0 |
| 316.019 | .0185 | | | | | .0185 | 5.84 | 2.98 | 2.02 | 2.98 | .013 | .00 | .00 | PIPE |
| 757.267 | 96.889 | 2.979 | 99.868 | 207.40 | 18.56 | 5.35 | 105.22 | .00 | 4.08 | 4.26 | 4.500 | .000 | .00 | 1 .0 |
| 354.147 | .0185 | | | | | .0180 | 6.39 | 2.98 | 2.02 | 2.98 | .013 | .00 | .00 | PIPE |
| 1111.414 | 103.430 | 3.030 | 106.460 | 207.40 | 18.21 | 5.15 | 111.61 | .00 | 4.08 | 4.22 | 4.500 | .000 | .00 | 1 .0 |
| 184.371 | .0185 | | | | | .0167 | 3.07 | 3.03 | 1.95 | 2.98 | .013 | .00 | .00 | PIPE |
| 1295.785 | 106.835 | 3.163 | 109.998 | 207.40 | 17.36 | 4.68 | 114.68 | .00 | 4.08 | 4.11 | 4.500 | .000 | .00 | 1 .0 |
| 78.022 | .0185 | | | | | .0149 | 1.16 | 3.16 | 1.80 | 2.98 | .013 | .00 | .00 | PIPE |
| 1373.807 | 108.276 | 3.307 | 111.583 | 207.40 | 16.55 | 4.25 | 115.84 | .00 | 4.08 | 3.97 | 4.500 | .000 | .00 | 1 .0 |
| 44.411 | .0185 | | | | | .0133 | .59 | 3.31 | 1.64 | 2.98 | .013 | .00 | .00 | PIPE |

2468 QUARRY CREEK
LINE A - OPTION 1
PR CONDITION Q100-ASSUMING COINCIDENT PEAKS

| Station / L/Elem | Invert Elev / Ch Slope | Depth (FT) | Water Elev | Q (CFS) | Vel (FPS) | Vel Head / SF Ave | Energy Grd.El. / HF | Super Elev / SE Dpth | Critical Depth / Froude N | Flow Top Width / Norm Dp | Height/ Dia.-FT / "N" | Base Wt or I.D. / X-Fall | ZL / ZR | No Wth Prs/Pip / Type Ch |
|---|---|---|---|---|---|---|---|---|---|---|---|---|---|---|
| 1418.218 | 109.096 | 3.465 | 112.561 | 207.40 | 15.78 | 3.87 | 116.43 | .00 | 4.08 | 3.79 | 4.500 | .000 | .00 | 1 .0 |
| 27.306 | .0185 | | | | | .0120 | .33 | 3.47 | 1.49 | 2.98 | .013 | .00 | .00 | PIPE |
| 1445.524 | 109.600 | 3.640 | 113.240 | 207.40 | 15.05 | 3.52 | 116.76 | .00 | 4.08 | 3.54 | 4.500 | .000 | .00 | 1 .0 |
| 15.953 | .0185 | | | | | .0109 | .17 | 3.64 | 1.34 | 2.98 | .013 | .00 | .00 | PIPE |
| 1461.477 | 109.895 | 3.839 | 113.734 | 207.40 | 14.35 | 3.20 | 116.93 | .00 | 4.08 | 3.19 | 4.500 | .000 | .00 | 1 .0 |
| 5.703 | .0185 | | | | | .0101 | .06 | 3.84 | 1.19 | 2.98 | .013 | .00 | .00 | PIPE |
| 1467.180 | 110.000 | 4.083 | 114.083 | 207.40 | 13.68 | 2.90 | 116.99 | .00 | 4.08 | 2.61 | 4.500 | .000 | .00 | 1 .0 |

2468 QUARRY CREEK
LINE A - OPTION 2
PR COND Q100-ASSUMING NO FLOW FROM BASIN DURING PEAK OF OFFSITE RUNON

| Station / L/Elem | Invert Elev / Ch Slope | Depth (FT) | Water Elev | Q (CFS) | Vel (FPS) | Vel Head / SF Ave | Energy Grd.El. / HF | Super Elev / SE Dpth | Critical Depth / Froude N | Flow Top Width / Norm Dp | Height/ Dia.-FT / "N" | Base Wt or I.D. / X-Fall | ZL / ZR | No Wth Prs/Pip / Type Ch |
|---|---|---|---|---|---|---|---|---|---|---|---|---|---|---|
| 100.000 | 84.600 | 2.700 | 87.300 | 207.41 | 19.17 | 5.71 | 93.01 | .00 | 4.10 | 4.98 | 5.000 | .000 | .00 | 1 .0 |
| 31.150 | .0096 | | | | | .0206 | .64 | 2.70 | 2.29 | 3.42 | .013 | .00 | .00 | PIPE |
| 131.150 | 84.900 | 2.625 | 87.525 | 207.41 | 19.86 | 6.13 | 93.65 | .00 | 4.10 | 4.99 | 5.000 | .000 | .00 | 1 .0 |
| JUNCT STR | .1250 | | | | | .0200 | .08 | 2.62 | 2.42 | | .013 | .00 | .00 | PIPE |
| 135.150 | 85.400 | 2.979 | 88.379 | 207.40 | 18.56 | 5.35 | 93.73 | .00 | 4.08 | 4.26 | 4.500 | .000 | .00 | 1 .0 |
| 622.117 | .0185 | | | | | .0185 | 11.49 | 2.98 | 2.02 | 2.98 | .013 | .00 | .00 | PIPE |
| 757.267 | 96.889 | 2.979 | 99.868 | 207.40 | 18.56 | 5.35 | 105.22 | .00 | 4.08 | 4.26 | 4.500 | .000 | .00 | 1 .0 |
| 354.147 | .0185 | | | | | .0180 | 6.39 | 2.98 | 2.02 | 2.98 | .013 | .00 | .00 | PIPE |
| 1111.414 | 103.430 | 3.030 | 106.460 | 207.40 | 18.21 | 5.15 | 111.61 | .00 | 4.08 | 4.22 | 4.500 | .000 | .00 | 1 .0 |
| 184.371 | .0185 | | | | | .0167 | 3.07 | 3.03 | 1.95 | 2.98 | .013 | .00 | .00 | PIPE |
| 1295.785 | 106.835 | 3.163 | 109.998 | 207.40 | 17.36 | 4.68 | 114.68 | .00 | 4.08 | 4.11 | 4.500 | .000 | .00 | 1 .0 |
| 78.022 | .0185 | | | | | .0149 | 1.16 | 3.16 | 1.80 | 2.98 | .013 | .00 | .00 | PIPE |
| 1373.807 | 108.276 | 3.307 | 111.583 | 207.40 | 16.55 | 4.25 | 115.84 | .00 | 4.08 | 3.97 | 4.500 | .000 | .00 | 1 .0 |
| 44.411 | .0185 | | | | | .0133 | .59 | 3.31 | 1.64 | 2.98 | .013 | .00 | .00 | PIPE |
| 1418.218 | 109.096 | 3.465 | 112.561 | 207.40 | 15.78 | 3.87 | 116.43 | .00 | 4.08 | 3.79 | 4.500 | .000 | .00 | 1 .0 |
| 27.306 | .0185 | | | | | .0120 | .33 | 3.47 | 1.49 | 2.98 | .013 | .00 | .00 | PIPE |
| 1445.524 | 109.600 | 3.640 | 113.240 | 207.40 | 15.05 | 3.52 | 116.76 | .00 | 4.08 | 3.54 | 4.500 | .000 | .00 | 1 .0 |
| 15.953 | .0185 | | | | | .0109 | .17 | 3.64 | 1.34 | 2.98 | .013 | .00 | .00 | PIPE |

Program Package Serial Number: 1355

WATER SURFACE PROFILE LISTING Date: 2-28-2012 Time: 7:16:42

2468 QUARRY CREEK
LINE A - OPTION 2
PR COND Q100-ASSUMING NO FLOW FROM BASIN DURING PEAK OF OFFSITE RUNON

| Station / L/Elem | Invert Elev / Ch Slope | Depth (FT) | Water Elev | Q (CFS) | Vel (FPS) | Vel Head / SF Ave | Energy Grd.El. / HF | Super Elev / SE Dpth | Critical Depth / Froude N | Flow Top Width / Norm Dp | Height/ Dia.-FT / "N" | Base Wt or I.D. / X-Fall | ZL / ZR | No Wth Prs/Pip / Type Ch |
|---|---|---|---|---|---|---|---|---|---|---|---|---|---|---|
| 1461.477 | 109.895 | 3.839 | 113.734 | 207.40 | 14.35 | 3.20 | 116.93 | .00 | 4.08 | 3.19 | 4.500 | .000 | .00 | 1 .0 |
| 5.703 | .0185 | | | | | .0101 | .06 | 3.84 | 1.19 | 2.98 | .013 | .00 | .00 | PIPE |
| 1467.180 | 110.000 | 4.083 | 114.083 | 207.40 | 13.68 | 2.90 | 116.99 | .00 | 4.08 | 2.61 | 4.500 | .000 | .00 | 1 .0 |

**PROJECT DESIGN CONSULTANTS**

PLANNING | LANDSCAPE ARCHITECTURE
ENVIRONMENTAL | ENGINEERING | SURVEY

WWW.PROJECTDESIGN.COM

PROJECT: QUARRY CREEK
SUBJECT: ENERGY DISSIPATION
PAGE: ____ OF ____ JOB NO.: 2468
DRAWN BY: CP DATE: 2/28/12
CHECKED BY: ____ DATE: ____

Impact Basin Design - HEC 14 Design Procedure : LINE A

Option 1) Assuming coincident peaks from Sys 600+700
Option 2) Assuming Sys 600 controls velocity calc (Because Sys 700 peak will not be coincident)
Option 1: Q = 297.6, V = 15.62 ; Option 2: Q = 207.4, V = 19.17
Option 2 controls

$D = 5.0' = 60''$

$Q = 207.4$ cfs (option 2)

Step 1) $V_o = 19.17$ fps (from WSPG output)

$A = Q/V_o = 10.82 \text{ ft}^2$

$y_e = (A/2)^{1/2} = (10.82/2)^{1/2} = 2.33$ = equivalent depth of flow entering dissipator

Step 2) Compute $F_r$ and energy at end of pipe, $H_o$

$$F_r = \frac{V_o}{\sqrt{g y_e}} = \frac{19.17}{\sqrt{(32.2)(2.33)}} = 2.2$$

$$H_o = y_e + \frac{V_o^2}{2g} = 2.33 + \frac{(19.17)^2}{2(32.2)} = 8.04$$ (close enough to EGL-FL from WSPG output)

Step 3) Determine $H_o/W_B$ from Figure 9.14. Calculate reqd width of basin, $W_B$

$$W_B = \frac{H_o}{H_o/W_B} = \frac{8.04}{0.6} = 13.4'$$ , Per RSD D-41, $W_B = 14.25$

Step 4) Dimensions per RSD D-41

Step 5) Determine exit velocity, $V_B$

$$H_B = \frac{Q}{W_B * V_B} + \frac{V_B^2}{2g} = H_o\left(1 - \frac{H_L}{H_o}\right), \quad \frac{H_L}{H_o} = 0.46 \text{ (Fig. 9.15)}$$

$$H_B = \frac{207.4}{14.25(V_B)} + \frac{V_B^2}{2(32.2)} = 8.04(1 - 0.46)$$

$V_B = 14.7$ fps, Use 1. ton riprap following the impact basin per D-40 velocity chart.

shows the relationship of the Froude number to the ratio of the energy entering the dissipator to the width of dissipator required. The Los Angeles tests indicate that limited extrapolation of this curve is permissible.

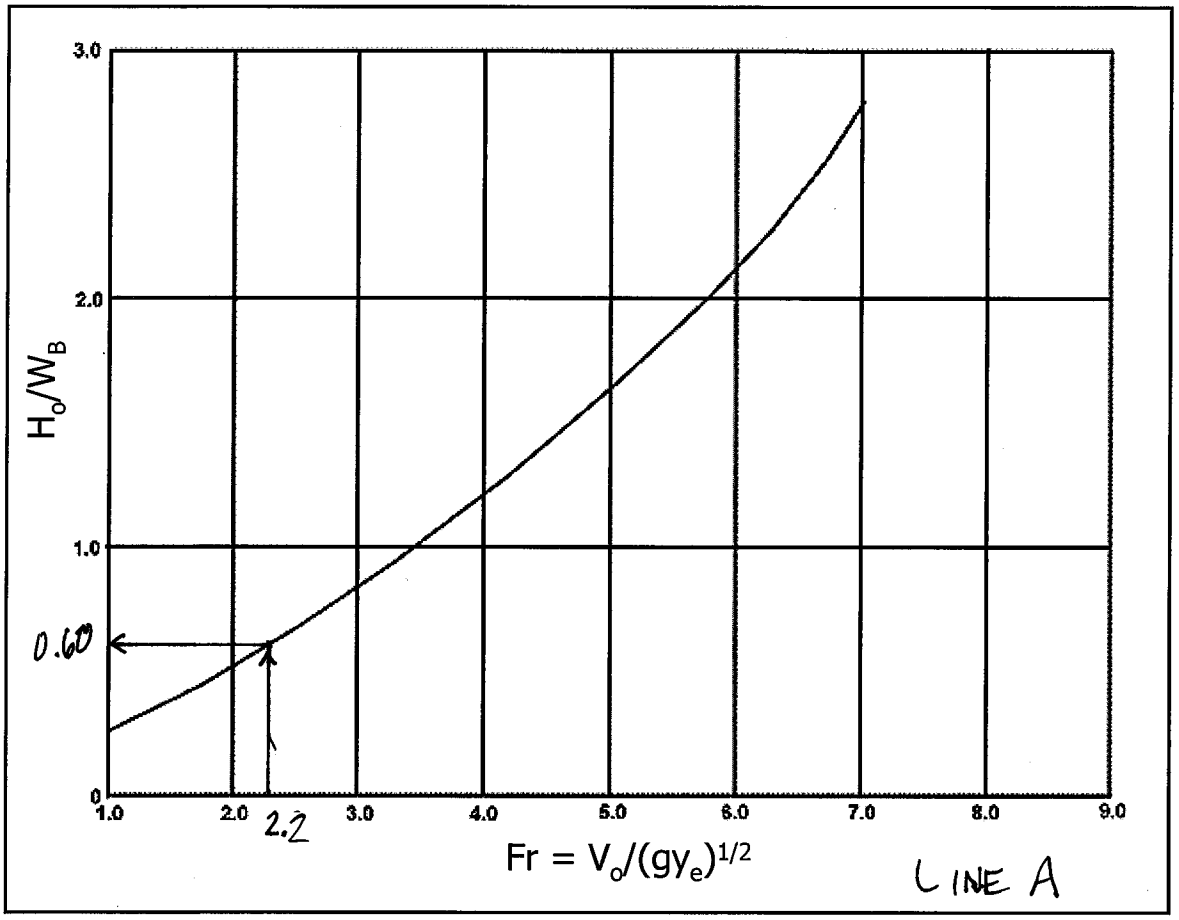


**Figure 9.14. Design Curve for USBR Type VI Impact Basin**

Once the basin width, $W_B$, has been determined, many of the other dimensions shown in Figure 9.13 follow according to Table 9.2. To use Table 9.2, round the value of $W_B$ to the nearest entry in the table to determine the other dimensions. Interpolation is not necessary.

In calculating the energy and the Froude number, the equivalent depth of flow, $y_e = (A/2)^{1/2}$, entering the dissipator from a pipe or irregular-shaped conduit must be computed. In other words, the cross section flow area in the pipe is converted into an equivalent rectangular cross section in which the width is twice the depth of flow. The conduit preceding the dissipator can be open, closed, or of any cross section.

The effectiveness of the basin is best illustrated by comparing the energy losses within the structure to those in a natural hydraulic jump, Figure 9.15. The energy loss was computed based on depth and velocity measurements made in the approach pipe and also in the downstream channel with no tailwater. Compared with the natural hydraulic jump, the USBR Type VI impact basin shows a greater capacity for dissipating energy.



From HEC 14

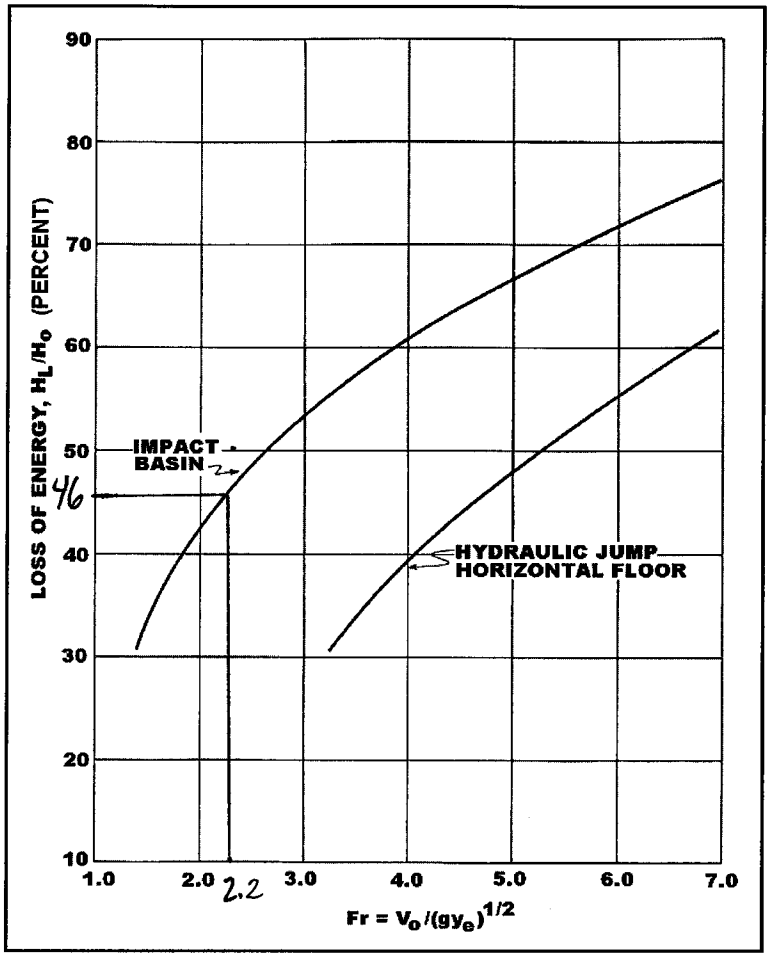


LINE A

**Figure 9.15. Energy Loss of USBR Type VI Impact Basin versus Hydraulic Jump**

For erosion reduction and better basin operation, use the alternative end sill and 45° wingwall design as shown in Figure 9.13. The sill should be set as low as possible to prevent degradation downstream. For best performance, the downstream channel should be at the same elevation as the top of the sill. A slot should be placed in the end sill to provide for drainage during periods of low flow. Although the basin is depressed, the slot allows water to drain into the surrounding soil.

For protection against undermining, a cutoff wall should be added at the end of the basin. Its depth will depend on the type of soil present. Riprap should be placed downstream of the basin for a length of at least four conduit widths. For riprap size recommendations see Chapter 10.

The Los Angeles experiments simulated discharges up to 11.3 $m^3/s$ (400 $ft^3/s$) and entrance velocities as high as 15.2 m/s (50 ft/s). Therefore, use of the basin is limited to installations within these parameters. Velocities up to 15.2 m/s (50 ft/s) can be used without subjecting the structure to damage from cavitation forces. Some structures already constructed have exceeded these thresholds suggesting there may be some design flexibility. For larger installations where discharge is separable, two or more structures may be placed side by side. The USBR Type VI is not recommended where debris or ice buildup may cause substantial clogging.



From HEC 14

Program Package Serial Number: 1355

WATER SURFACE PROFILE LISTING Date:10- 2-2012 Time: 6:50: 3

2468 QUARRY CREEK
SD LINE B
100 YEAR PROPOSED FLOW

| Station / L/Elem | Invert Elev / Ch Slope | Depth (FT) | Water Elev | Q (CFS) | Vel (FPS) | Vel Head / SF Ave | Energy Grd.El. / HF | Super Elev / SE Dpth | Critical Depth / Froude N | Flow Top Width / Norm Dp | Height/ Dia.-FT / "N" | Base Wt or I.D. / X-Fall | ZL / ZR | No Wth Prs/Pip / Type Ch |
|---|---|---|---|---|---|---|---|---|---|---|---|---|---|---|
| 112.330 | 83.640 | .712 | 84.352 | 36.90 | 28.72 | 12.81 | 97.16 | .00 | 1.98 | 2.55 | 3.000 | .000 | .00 | 1 .0 |
| 6.000 | .0100 | | | | | .2146 | 1.29 | .71 | 7.13 | 1.59 | .013 | .00 | .00 | PIPE |
| 118.330 | 83.700 | .689 | 84.389 | 36.90 | 30.12 | 14.08 | 98.47 | .00 | 1.98 | 2.52 | 3.000 | .000 | .00 | 1 .0 |
| 5.734 | .2776 | | | | | .2255 | 1.29 | .69 | 7.62 | .66 | .013 | .00 | .00 | PIPE |
| 124.064 | 85.292 | .694 | 85.986 | 36.90 | 29.79 | 13.78 | 99.77 | .00 | 1.98 | 2.53 | 3.000 | .000 | .00 | 1 .0 |
| 17.665 | .2776 | | | | | .2080 | 3.67 | .69 | 7.50 | .66 | .013 | .00 | .00 | PIPE |
| 141.729 | 90.196 | .717 | 90.913 | 36.90 | 28.41 | 12.53 | 103.44 | .00 | 1.98 | 2.56 | 3.000 | .000 | .00 | 1 .0 |
| 11.630 | .2776 | | | | | .1818 | 2.11 | .72 | 7.03 | .66 | .013 | .00 | .00 | PIPE |
| 153.359 | 93.424 | .742 | 94.167 | 36.90 | 27.08 | 11.39 | 105.56 | .00 | 1.98 | 2.59 | 3.000 | .000 | .00 | 1 .0 |
| 8.516 | .2776 | | | | | .1591 | 1.35 | .74 | 6.58 | .66 | .013 | .00 | .00 | PIPE |
| 161.875 | 95.789 | .768 | 96.557 | 36.90 | 25.82 | 10.35 | 106.91 | .00 | 1.98 | 2.62 | 3.000 | .000 | .00 | 1 .0 |
| 6.611 | .2776 | | | | | .1392 | .92 | .77 | 6.16 | .66 | .013 | .00 | .00 | PIPE |
| 168.485 | 97.624 | .794 | 98.418 | 36.90 | 24.62 | 9.41 | 107.83 | .00 | 1.98 | 2.65 | 3.000 | .000 | .00 | 1 .0 |
| 5.310 | .2776 | | | | | .1217 | .65 | .79 | 5.77 | .66 | .013 | .00 | .00 | PIPE |
| 173.795 | 99.098 | .822 | 99.920 | 36.90 | 23.48 | 8.56 | 108.48 | .00 | 1.98 | 2.68 | 3.000 | .000 | .00 | 1 .0 |
| 4.383 | .2776 | | | | | .1065 | .47 | .82 | 5.40 | .66 | .013 | .00 | .00 | PIPE |
| 178.179 | 100.315 | .850 | 101.165 | 36.90 | 22.38 | 7.78 | 108.94 | .00 | 1.98 | 2.70 | 3.000 | .000 | .00 | 1 .0 |
| 3.673 | .2776 | | | | | .0932 | .34 | .85 | 5.05 | .66 | .013 | .00 | .00 | PIPE |

2468 QUARRY CREEK
SD LINE B
100 YEAR PROPOSED FLOW

| Station / L/Elem | Invert Elev / Ch Slope | Depth (FT) | Water Elev | Q (CFS) | Vel (FPS) | Vel Head / SF Ave | Energy Grd.El. / HF | Super Elev / SE Dpth | Critical Depth / Froude N | Flow Top Width / Norm Dp | Height/ Dia.-FT / "N" | Base Wt or I.D. / X-Fall | ZL / ZR | No Wth Prs/Pip / Type Ch |
|---|---|---|---|---|---|---|---|---|---|---|---|---|---|---|
| 181.851 | 101.334 | .880 | 102.215 | 36.90 | 21.34 | 7.07 | 109.29 | .00 | 1.98 | 2.73 | 3.000 | .000 | .00 | 1 .0 |
| 3.127 | .2776 | | | | | .0816 | .26 | .88 | 4.73 | .66 | .013 | .00 | .00 | PIPE |
| 184.978 | 102.202 | .910 | 103.113 | 36.90 | 20.35 | 6.43 | 109.54 | .00 | 1.98 | 2.76 | 3.000 | .000 | .00 | 1 .0 |
| 2.679 | .2776 | | | | | .0714 | .19 | .91 | 4.42 | .66 | .013 | .00 | .00 | PIPE |
| 187.657 | 102.946 | .942 | 103.888 | 36.90 | 19.40 | 5.84 | 109.73 | .00 | 1.98 | 2.78 | 3.000 | .000 | .00 | 1 .0 |
| 2.317 | .2776 | | | | | .0625 | .14 | .94 | 4.14 | .66 | .013 | .00 | .00 | PIPE |
| 189.974 | 103.590 | .975 | 104.565 | 36.90 | 18.50 | 5.31 | 109.88 | .00 | 1.98 | 2.81 | 3.000 | .000 | .00 | 1 .0 |
| 2.011 | .2776 | | | | | .0548 | .11 | .98 | 3.87 | .66 | .013 | .00 | .00 | PIPE |
| 191.985 | 104.148 | 1.010 | 105.158 | 36.90 | 17.64 | 4.83 | 109.99 | .00 | 1.98 | 2.84 | 3.000 | .000 | .00 | 1 .0 |
| 1.756 | .2776 | | | | | .0480 | .08 | 1.01 | 3.62 | .66 | .013 | .00 | .00 | PIPE |
| 193.741 | 104.635 | 1.046 | 105.681 | 36.90 | 16.82 | 4.39 | 110.07 | .00 | 1.98 | 2.86 | 3.000 | .000 | .00 | 1 .0 |
| 1.538 | .2776 | | | | | .0421 | .06 | 1.05 | 3.38 | .66 | .013 | .00 | .00 | PIPE |
| 195.279 | 105.062 | 1.083 | 106.145 | 36.90 | 16.03 | 3.99 | 110.14 | .00 | 1.98 | 2.88 | 3.000 | .000 | .00 | 1 .0 |
| 1.346 | .2776 | | | | | .0369 | .05 | 1.08 | 3.16 | .66 | .013 | .00 | .00 | PIPE |
| 196.624 | 105.436 | 1.122 | 106.558 | 36.90 | 15.29 | 3.63 | 110.19 | .00 | 1.98 | 2.90 | 3.000 | .000 | .00 | 1 .0 |
| 1.182 | .2776 | | | | | .0324 | .04 | 1.12 | 2.95 | .66 | .013 | .00 | .00 | PIPE |
| 197.806 | 105.764 | 1.162 | 106.926 | 36.90 | 14.58 | 3.30 | 110.23 | .00 | 1.98 | 2.92 | 3.000 | .000 | .00 | 1 .0 |
| 1.031 | .2776 | | | | | .0284 | .03 | 1.16 | 2.76 | .66 | .013 | .00 | .00 | PIPE |

2468 QUARRY CREEK
SD LINE B
100 YEAR PROPOSED FLOW

| Station / L/Elem | Invert Elev / Ch Slope | Depth (FT) | Water Elev | Q (CFS) | Vel (FPS) | Vel Head / SF Ave | Energy Grd.El. / HF | Super Elev / SE Dpth | Critical Depth / Froude N | Flow Top Width / Norm Dp | Height/ Dia.-FT / "N" | Base Wt or I.D. / X-Fall | ZL / ZR | No Wth Prs/Pip / Type Ch |
|---|---|---|---|---|---|---|---|---|---|---|---|---|---|---|
| 198.837 | 106.050 | 1.205 | 107.255 | 36.90 | 13.90 | 3.00 | 110.25 | .00 | 1.98 | 2.94 | 3.000 | .000 | .00 | 1 .0 |
| .909 | .2776 | | | | | .0249 | .02 | 1.21 | 2.58 | .66 | .013 | .00 | .00 | PIPE |
| 199.746 | 106.302 | 1.248 | 107.551 | 36.90 | 13.25 | 2.73 | 110.28 | .00 | 1.98 | 2.96 | 3.000 | .000 | .00 | 1 .0 |
| .789 | .2776 | | | | | .0219 | .02 | 1.25 | 2.41 | .66 | .013 | .00 | .00 | PIPE |
| 200.536 | 106.522 | 1.294 | 107.816 | 36.90 | 12.63 | 2.48 | 110.29 | .00 | 1.98 | 2.97 | 3.000 | .000 | .00 | 1 .0 |
| .686 | .2776 | | | | | .0192 | .01 | 1.29 | 2.25 | .66 | .013 | .00 | .00 | PIPE |
| 201.222 | 106.712 | 1.342 | 108.054 | 36.90 | 12.05 | 2.25 | 110.31 | .00 | 1.98 | 2.98 | 3.000 | .000 | .00 | 1 .0 |
| .594 | .2776 | | | | | .0169 | .01 | 1.34 | 2.10 | .66 | .013 | .00 | .00 | PIPE |
| 201.816 | 106.877 | 1.392 | 108.269 | 36.90 | 11.49 | 2.05 | 110.32 | .00 | 1.98 | 2.99 | 3.000 | .000 | .00 | 1 .0 |
| .507 | .2776 | | | | | .0149 | .01 | 1.39 | 1.95 | .66 | .013 | .00 | .00 | PIPE |
| 202.323 | 107.018 | 1.445 | 108.463 | 36.90 | 10.95 | 1.86 | 110.33 | .00 | 1.98 | 3.00 | 3.000 | .000 | .00 | 1 .0 |
| .436 | .2776 | | | | | .0131 | .01 | 1.45 | 1.82 | .66 | .013 | .00 | .00 | PIPE |
| 202.759 | 107.139 | 1.499 | 108.638 | 36.90 | 10.44 | 1.69 | 110.33 | .00 | 1.98 | 3.00 | 3.000 | .000 | .00 | 1 .0 |
| .360 | .2776 | | | | | .0115 | .00 | 1.50 | 1.70 | .66 | .013 | .00 | .00 | PIPE |
| 203.119 | 107.239 | 1.557 | 108.796 | 36.90 | 9.96 | 1.54 | 110.34 | .00 | 1.98 | 3.00 | 3.000 | .000 | .00 | 1 .0 |
| .299 | .2776 | | | | | .0101 | .00 | 1.56 | 1.58 | .66 | .013 | .00 | .00 | PIPE |
| 203.418 | 107.322 | 1.617 | 108.939 | 36.90 | 9.49 | 1.40 | 110.34 | .00 | 1.98 | 2.99 | 3.000 | .000 | .00 | 1 .0 |
| .235 | .2776 | | | | | .0090 | .00 | 1.62 | 1.47 | .66 | .013 | .00 | .00 | PIPE |

2468 QUARRY CREEK
SD LINE B
100 YEAR PROPOSED FLOW

| Station / L/Elem | Invert Elev / Ch Slope | Depth (FT) | Water Elev | Q (CFS) | Vel (FPS) | Vel Head / SF Ave | Energy Grd.El. / HF | Super Elev / SE Dpth | Critical Depth / Froude N | Flow Top Width / Norm Dp | Height/ Dia.-FT / "N" | Base Wt or I.D. / X-Fall | ZL / ZR | No Wth Prs/Pip / Type Ch |
|---|---|---|---|---|---|---|---|---|---|---|---|---|---|---|
| 203.653 | 107.387 | 1.681 | 109.068 | 36.90 | 9.05 | 1.27 | 110.34 | .00 | 1.98 | 2.98 | 3.000 | .000 | .00 | 1 .0 |
| .180 | .2776 | | | | | .0079 | .00 | 1.68 | 1.36 | .66 | .013 | .00 | .00 | PIPE |
| 203.834 | 107.437 | 1.748 | 109.185 | 36.90 | 8.63 | 1.16 | 110.34 | .00 | 1.98 | 2.96 | 3.000 | .000 | .00 | 1 .0 |
| .126 | .2776 | | | | | .0070 | .00 | 1.75 | 1.27 | .66 | .013 | .00 | .00 | PIPE |
| 203.960 | 107.472 | 1.819 | 109.291 | 36.90 | 8.23 | 1.05 | 110.34 | .00 | 1.98 | 2.93 | 3.000 | .000 | .00 | 1 .0 |
| .076 | .2776 | | | | | .0062 | .00 | 1.82 | 1.17 | .66 | .013 | .00 | .00 | PIPE |
| 204.035 | 107.493 | 1.894 | 109.387 | 36.90 | 7.85 | .96 | 110.34 | .00 | 1.98 | 2.89 | 3.000 | .000 | .00 | 1 .0 |
| .025 | .2776 | | | | | .0055 | .00 | 1.89 | 1.08 | .66 | .013 | .00 | .00 | PIPE |
| WALL | ENTRANCE | | | | | | | | | | | | | |
| 204.060 | 107.500 | 1.976 | 109.476 | 36.90 | 7.47 | .87 | 110.34 | .00 | 1.98 | 2.84 | 3.000 | .000 | .00 | 0 .0 |

**PROJECT DESIGN CONSULTANTS**

PLANNING | LANDSCAPE ARCHITECTURE
ENVIRONMENTAL | ENGINEERING | SURVEY

WWW.PROJECTDESIGN.COM

PROJECT: QUARRY CREEK
SUBJECT: ENERGY DISSIPATION
PAGE: ____ OF ____ JOB NO.: 2468
DRAWN BY: CP DATE: 10/2/12
CHECKED BY: ____ DATE: ____

Impact Basin Design - HEC 14 Design Procedure : LINE B

$D = 3.0' = 36''$

$Q = 36.9$ cfs

Step 1) $V_o = 28.72$ fps (from WSPG output)

$A = Q/V_o = 1.28\ ft^2$

$y_e = (A/2)^{1/2} = (1.28/2)^{1/2} = 0.80$ = equivalent depth of flow entering dissipator

Step 2) Compute $F_r$ and energy at end of pipe, $H_o$

$$F_r = \frac{V_o}{\sqrt{g y_e}} = \frac{28.72}{\sqrt{(32.2)(0.8)}} = 5.65$$

$$H_o = y_e + \frac{V_o^2}{2g} = 0.80 + \frac{(28.72)^2}{2(32.2)} = 13.61$$ (close enough to EGL-FL from WSPG output)

Step 3) Determine $H_o/W_B$ from Figure 9.14. Calculate reqd width of basin, $W_B$

$$W_B = \frac{H_o}{H_o/W_B} = \frac{13.61}{1.9} = 7.2$$ , Per RSD D-41, $W_B = 9.25$

Step 4) Dimensions per RSD D-41

Step 5) Determine exit velocity, $V_B$

$$H_B = \frac{Q}{W_B * V_B} + \frac{V_B^2}{2g} = H_o\left(1 - \frac{H_L}{H_o}\right), \quad \frac{H_L}{H_o} = 0.7 \quad (\text{Fig. } 9.15)$$

$$H_B = \frac{36.9}{9.25(V_B)} + \frac{V_B^2}{2(32.2)} = 13.61\,(1 - 0.7)$$

$V_B = 15.7$ fps, Use 1 ton riprap following the impact basin per D-40 velocity chart

shows the relationship of the Froude number to the ratio of the energy entering the dissipator to the width of dissipator required. The Los Angeles tests indicate that limited extrapolation of this curve is permissible.

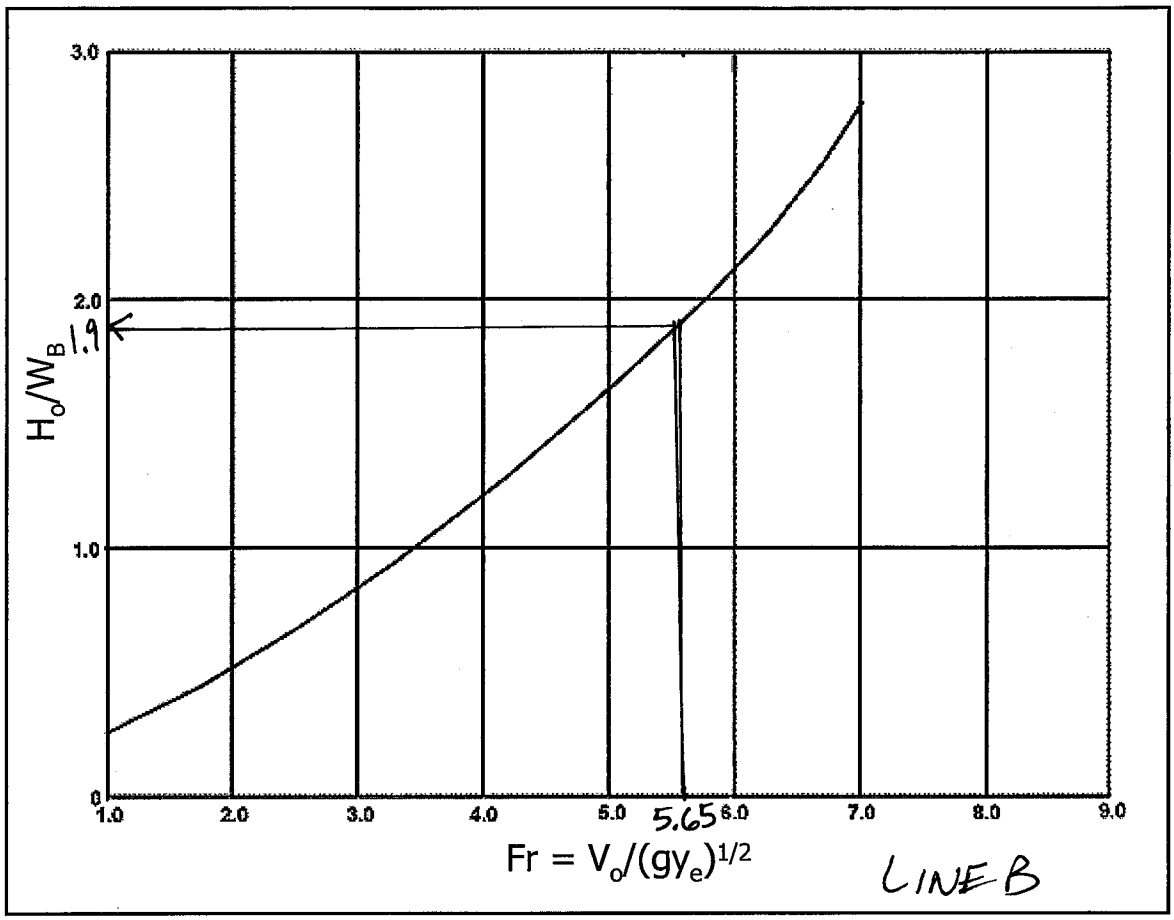


**Figure 9.14. Design Curve for USBR Type VI Impact Basin**

Once the basin width, $W_B$, has been determined, many of the other dimensions shown in Figure 9.13 follow according to Table 9.2. To use Table 9.2, round the value of $W_B$ to the nearest entry in the table to determine the other dimensions. Interpolation is not necessary.

In calculating the energy and the Froude number, the equivalent depth of flow, $y_e = (A/2)^{1/2}$, entering the dissipator from a pipe or irregular-shaped conduit must be computed. In other words, the cross section flow area in the pipe is converted into an equivalent rectangular cross section in which the width is twice the depth of flow. The conduit preceding the dissipator can be open, closed, or of any cross section.

The effectiveness of the basin is best illustrated by comparing the energy losses within the structure to those in a natural hydraulic jump, Figure 9.15. The energy loss was computed based on depth and velocity measurements made in the approach pipe and also in the downstream channel with no tailwater. Compared with the natural hydraulic jump, the USBR Type VI impact basin shows a greater capacity for dissipating energy.



From HEC 14

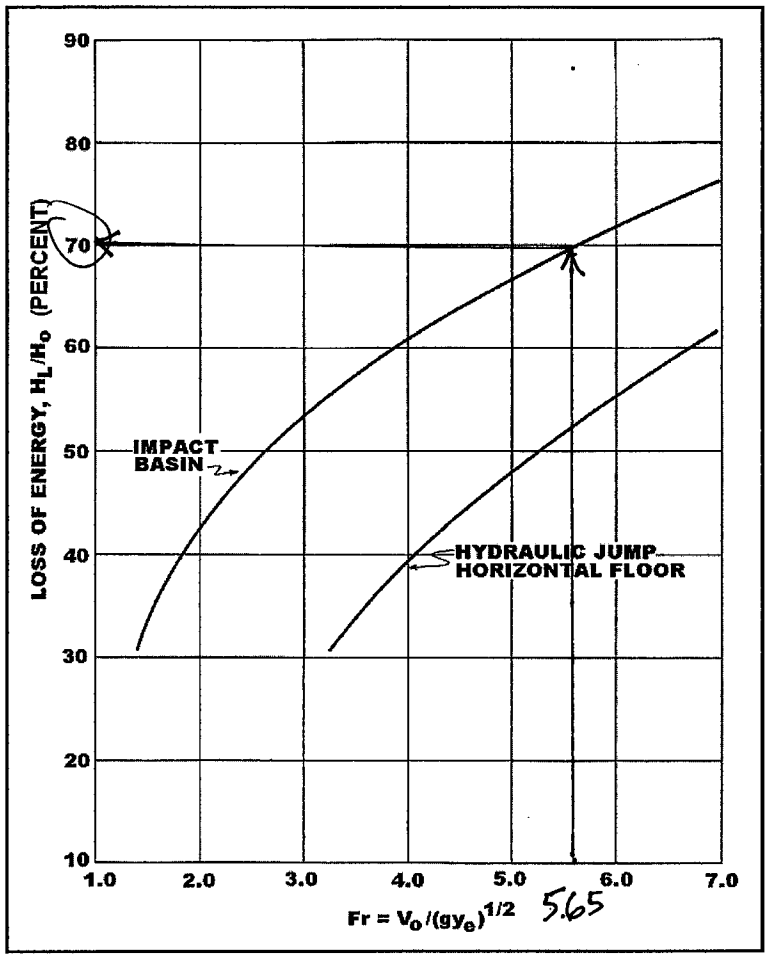


LINEB

**Figure 9.15. Energy Loss of USBR Type VI Impact Basin versus Hydraulic Jump**

For erosion reduction and better basin operation, use the alternative end sill and 45° wingwall design as shown in Figure 9.13. The sill should be set as low as possible to prevent degradation downstream. For best performance, the downstream channel should be at the same elevation as the top of the sill. A slot should be placed in the end sill to provide for drainage during periods of low flow. Although the basin is depressed, the slot allows water to drain into the surrounding soil.

For protection against undermining, a cutoff wall should be added at the end of the basin. Its depth will depend on the type of soil present. Riprap should be placed downstream of the basin for a length of at least four conduit widths. For riprap size recommendations see Chapter 10.

The Los Angeles experiments simulated discharges up to 11.3 $m^3/s$ (400 $ft^3/s$) and entrance velocities as high as 15.2 m/s (50 ft/s). Therefore, use of the basin is limited to installations within these parameters. Velocities up to 15.2 m/s (50 ft/s) can be used without subjecting the structure to damage from cavitation forces. Some structures already constructed have exceeded these thresholds suggesting there may be some design flexibility. For larger installations where discharge is separable, two or more structures may be placed side by side. The USBR Type VI is not recommended where debris or ice buildup may cause substantial clogging.



From HEC14

Program Package Serial Number: 1355

WATER SURFACE PROFILE LISTING Date:10- 2-2012 Time: 7: 2:24

2468 QUARRY CREEK
SD LINE C
100 YEAR PROPOSED FLOW

| Station / L/Elem | Invert Elev / Ch Slope | Depth (FT) | Water Elev | Q (CFS) | Vel (FPS) | Vel Head / SF Ave | Energy Grd.El. / HF | Super Elev / SE Dpth | Critical Depth / Froude N | Flow Top Width / Norm Dp | Height/ Dia.-FT / "N" | Base Wt or I.D. / X-Fall | ZL / ZR | No Wth Prs/Pip / Type Ch |
|---|---|---|---|---|---|---|---|---|---|---|---|---|---|---|
| 112.330 | 76.190 | .548 | 76.738 | 23.70 | 26.82 | 11.17 | 87.90 | .00 | 1.57 | 2.32 | 3.000 | .000 | .00 | 1 .0 |
| 1.581 | .0100 | | | | | .2436 | .39 | .55 | 7.65 | 1.24 | .013 | .00 | .00 | PIPE |
| 113.911 | 76.206 | .541 | 76.747 | 23.70 | 27.27 | 11.54 | 88.29 | .00 | 1.57 | 2.31 | 3.000 | .000 | .00 | 1 .0 |
| 4.419 | .0100 | | | | | .2674 | 1.18 | .54 | 7.83 | 1.24 | .013 | .00 | .00 | PIPE |
| 118.330 | 76.250 | .524 | 76.774 | 23.70 | 28.60 | 12.70 | 89.47 | .00 | 1.57 | 2.28 | 3.000 | .000 | .00 | 1 .0 |
| 17.945 | .3120 | | | | | .2744 | 4.92 | .52 | 8.36 | .51 | .013 | .00 | .00 | PIPE |
| 136.275 | 81.849 | .534 | 82.384 | 23.70 | 27.79 | 12.00 | 94.38 | .00 | 1.57 | 2.30 | 3.000 | .000 | .00 | 1 .0 |
| 16.394 | .3120 | | | | | .2466 | 4.04 | .53 | 8.04 | .51 | .013 | .00 | .00 | PIPE |
| 152.670 | 86.965 | .552 | 87.517 | 23.70 | 26.50 | 10.91 | 98.42 | .00 | 1.57 | 2.33 | 3.000 | .000 | .00 | 1 .0 |
| 10.071 | .3120 | | | | | .2155 | 2.17 | .55 | 7.53 | .51 | .013 | .00 | .00 | PIPE |
| 162.741 | 90.107 | .571 | 90.679 | 23.70 | 25.27 | 9.91 | 100.59 | .00 | 1.57 | 2.36 | 3.000 | .000 | .00 | 1 .0 |
| 7.129 | .3120 | | | | | .1883 | 1.34 | .57 | 7.06 | .51 | .013 | .00 | .00 | PIPE |
| 169.870 | 92.332 | .590 | 92.922 | 23.70 | 24.09 | 9.01 | 101.93 | .00 | 1.57 | 2.39 | 3.000 | .000 | .00 | 1 .0 |
| 5.417 | .3120 | | | | | .1645 | .89 | .59 | 6.61 | .51 | .013 | .00 | .00 | PIPE |
| 175.287 | 94.022 | .610 | 94.632 | 23.70 | 22.97 | 8.19 | 102.83 | .00 | 1.57 | 2.42 | 3.000 | .000 | .00 | 1 .0 |
| 4.301 | .3120 | | | | | .1437 | .62 | .61 | 6.19 | .51 | .013 | .00 | .00 | PIPE |
| 179.588 | 95.364 | .631 | 95.995 | 23.70 | 21.90 | 7.45 | 103.44 | .00 | 1.57 | 2.45 | 3.000 | .000 | .00 | 1 .0 |
| 3.520 | .3120 | | | | | .1256 | .44 | .63 | 5.80 | .51 | .013 | .00 | .00 | PIPE |

2468 QUARRY CREEK
SD LINE C
100 YEAR PROPOSED FLOW

| Station / L/Elem | Invert Elev / Ch Slope | Depth (FT) | Water Elev | Q (CFS) | Vel (FPS) | Vel Head / SF Ave | Energy Grd.El. / HF | Super Elev / SE Dpth | Critical Depth / Froude N | Flow Top Width / Norm Dp | Height/ Dia.-FT / "N" | Base Wt or I.D. / X-Fall | ZL / ZR | No Wth Prs/Pip / Type Ch |
|---|---|---|---|---|---|---|---|---|---|---|---|---|---|---|
| 183.108 | 96.463 | .652 | 97.115 | 23.70 | 20.88 | 6.77 | 103.89 | .00 | 1.57 | 2.47 | 3.000 | .000 | .00 | 1 .0 |
| 2.935 | .3120 | | | | | .1098 | .32 | .65 | 5.43 | .51 | .013 | .00 | .00 | PIPE |
| 186.043 | 97.378 | .674 | 98.052 | 23.70 | 19.91 | 6.16 | 104.21 | .00 | 1.57 | 2.50 | 3.000 | .000 | .00 | 1 .0 |
| 2.483 | .3120 | | | | | .0959 | .24 | .67 | 5.09 | .51 | .013 | .00 | .00 | PIPE |
| 188.526 | 98.153 | .697 | 98.850 | 23.70 | 18.98 | 5.60 | 104.45 | .00 | 1.57 | 2.53 | 3.000 | .000 | .00 | 1 .0 |
| 2.125 | .3120 | | | | | .0839 | .18 | .70 | 4.77 | .51 | .013 | .00 | .00 | PIPE |
| 190.651 | 98.816 | .721 | 99.537 | 23.70 | 18.10 | 5.09 | 104.62 | .00 | 1.57 | 2.56 | 3.000 | .000 | .00 | 1 .0 |
| 1.833 | .3120 | | | | | .0734 | .13 | .72 | 4.46 | .51 | .013 | .00 | .00 | PIPE |
| 192.484 | 99.388 | .746 | 100.134 | 23.70 | 17.26 | 4.63 | 104.76 | .00 | 1.57 | 2.59 | 3.000 | .000 | .00 | 1 .0 |
| 1.592 | .3120 | | | | | .0642 | .10 | .75 | 4.18 | .51 | .013 | .00 | .00 | PIPE |
| 194.076 | 99.885 | .772 | 100.657 | 23.70 | 16.46 | 4.20 | 104.86 | .00 | 1.57 | 2.62 | 3.000 | .000 | .00 | 1 .0 |
| 1.392 | .3120 | | | | | .0561 | .08 | .77 | 3.91 | .51 | .013 | .00 | .00 | PIPE |
| 195.468 | 100.319 | .798 | 101.117 | 23.70 | 15.69 | 3.82 | 104.94 | .00 | 1.57 | 2.65 | 3.000 | .000 | .00 | 1 .0 |
| 1.215 | .3120 | | | | | .0491 | .06 | .80 | 3.66 | .51 | .013 | .00 | .00 | PIPE |
| 196.683 | 100.698 | .826 | 101.524 | 23.70 | 14.96 | 3.47 | 105.00 | .00 | 1.57 | 2.68 | 3.000 | .000 | .00 | 1 .0 |
| 1.066 | .3120 | | | | | .0430 | .05 | .83 | 3.43 | .51 | .013 | .00 | .00 | PIPE |
| 197.749 | 101.031 | .855 | 101.886 | 23.70 | 14.26 | 3.16 | 105.04 | .00 | 1.57 | 2.71 | 3.000 | .000 | .00 | 1 .0 |
| .937 | .3120 | | | | | .0376 | .04 | .86 | 3.21 | .51 | .013 | .00 | .00 | PIPE |

2468 QUARRY CREEK
SD LINE C
100 YEAR PROPOSED FLOW

| Station / L/Elem | Invert Elev / Ch Slope | Depth (FT) | Water Elev | Q (CFS) | Vel (FPS) | Vel Head / SF Ave | Energy Grd.El. / HF | Super Elev / SE Dpth | Critical Depth / Froude N | Flow Top Width / Norm Dp | Height/ Dia.-FT / "N" | Base Wt or I.D. / X-Fall | ZL / ZR | No Wth Prs/Pip / Type Ch |
|---|---|---|---|---|---|---|---|---|---|---|---|---|---|---|
| 198.686 | 101.323 | .885 | 102.208 | 23.70 | 13.60 | 2.87 | 105.08 | .00 | 1.57 | 2.74 | 3.000 | .000 | .00 | 1 .0 |
| .824 | .3120 | | | | | .0329 | .03 | .89 | 3.00 | .51 | .013 | .00 | .00 | PIPE |
| 199.511 | 101.580 | .916 | 102.497 | 23.70 | 12.97 | 2.61 | 105.11 | .00 | 1.57 | 2.76 | 3.000 | .000 | .00 | 1 .0 |
| .725 | .3120 | | | | | .0288 | .02 | .92 | 2.81 | .51 | .013 | .00 | .00 | PIPE |
| 200.236 | 101.807 | .948 | 102.755 | 23.70 | 12.36 | 2.37 | 105.13 | .00 | 1.57 | 2.79 | 3.000 | .000 | .00 | 1 .0 |
| .637 | .3120 | | | | | .0252 | .02 | .95 | 2.63 | .51 | .013 | .00 | .00 | PIPE |
| 200.873 | 102.006 | .981 | 102.987 | 23.70 | 11.79 | 2.16 | 105.14 | .00 | 1.57 | 2.81 | 3.000 | .000 | .00 | 1 .0 |
| .556 | .3120 | | | | | .0221 | .01 | .98 | 2.46 | .51 | .013 | .00 | .00 | PIPE |
| 201.429 | 102.179 | 1.016 | 103.195 | 23.70 | 11.24 | 1.96 | 105.16 | .00 | 1.57 | 2.84 | 3.000 | .000 | .00 | 1 .0 |
| .486 | .3120 | | | | | .0194 | .01 | 1.02 | 2.30 | .51 | .013 | .00 | .00 | PIPE |
| 201.915 | 102.331 | 1.052 | 103.383 | 23.70 | 10.72 | 1.78 | 105.17 | .00 | 1.57 | 2.86 | 3.000 | .000 | .00 | 1 .0 |
| .424 | .3120 | | | | | .0170 | .01 | 1.05 | 2.15 | .51 | .013 | .00 | .00 | PIPE |
| 202.339 | 102.463 | 1.089 | 103.552 | 23.70 | 10.22 | 1.62 | 105.17 | .00 | 1.57 | 2.89 | 3.000 | .000 | .00 | 1 .0 |
| .361 | .3120 | | | | | .0149 | .01 | 1.09 | 2.01 | .51 | .013 | .00 | .00 | PIPE |
| 202.701 | 102.576 | 1.129 | 103.705 | 23.70 | 9.74 | 1.47 | 105.18 | .00 | 1.57 | 2.91 | 3.000 | .000 | .00 | 1 .0 |
| .314 | .3120 | | | | | .0131 | .00 | 1.13 | 1.88 | .51 | .013 | .00 | .00 | PIPE |
| 203.015 | 102.674 | 1.169 | 103.843 | 23.70 | 9.29 | 1.34 | 105.18 | .00 | 1.57 | 2.93 | 3.000 | .000 | .00 | 1 .0 |
| .262 | .3120 | | | | | .0115 | .00 | 1.17 | 1.75 | .51 | .013 | .00 | .00 | PIPE |

2468 QUARRY CREEK
SD LINE C
100 YEAR PROPOSED FLOW

| Station / L/Elem | Invert Elev / Ch Slope | Depth (FT) | Water Elev | Q (CFS) | Vel (FPS) | Vel Head / SF Ave | Energy Grd.El. / HF | Super Elev / SE Dpth | Critical Depth / Froude N | Flow Top Width / Norm Dp | Height/ Dia.-FT / "N" | Base Wt or I.D. / X-Fall | ZL / ZR | No Wth Prs/Pip / Type Ch |
|---|---|---|---|---|---|---|---|---|---|---|---|---|---|---|
| 203.277 | 102.756 | 1.212 | 103.968 | 23.70 | 8.86 | 1.22 | 105.19 | .00 | 1.57 | 2.94 | 3.000 | .000 | .00 | 1 .0 |
| .221 | .3120 | | | | | .0101 | .00 | 1.21 | 1.64 | .51 | .013 | .00 | .00 | PIPE |
| 203.498 | 102.825 | 1.256 | 104.081 | 23.70 | 8.44 | 1.11 | 105.19 | .00 | 1.57 | 2.96 | 3.000 | .000 | .00 | 1 .0 |
| .180 | .3120 | | | | | .0088 | .00 | 1.26 | 1.53 | .51 | .013 | .00 | .00 | PIPE |
| 203.678 | 102.881 | 1.302 | 104.183 | 23.70 | 8.05 | 1.01 | 105.19 | .00 | 1.57 | 2.97 | 3.000 | .000 | .00 | 1 .0 |
| .143 | .3120 | | | | | .0078 | .00 | 1.30 | 1.43 | .51 | .013 | .00 | .00 | PIPE |
| 203.821 | 102.926 | 1.350 | 104.276 | 23.70 | 7.68 | .92 | 105.19 | .00 | 1.57 | 2.98 | 3.000 | .000 | .00 | 1 .0 |
| .105 | .3120 | | | | | .0068 | .00 | 1.35 | 1.33 | .51 | .013 | .00 | .00 | PIPE |
| 203.927 | 102.958 | 1.401 | 104.360 | 23.70 | 7.32 | .83 | 105.19 | .00 | 1.57 | 2.99 | 3.000 | .000 | .00 | 1 .0 |
| .077 | .3120 | | | | | .0060 | .00 | 1.40 | 1.24 | .51 | .013 | .00 | .00 | PIPE |
| 204.004 | 102.983 | 1.453 | 104.436 | 23.70 | 6.98 | .76 | 105.19 | .00 | 1.57 | 3.00 | 3.000 | .000 | .00 | 1 .0 |
| .042 | .3120 | | | | | .0053 | .00 | 1.45 | 1.16 | .51 | .013 | .00 | .00 | PIPE |
| 204.046 | 102.995 | 1.509 | 104.505 | 23.70 | 6.65 | .69 | 105.19 | .00 | 1.57 | 3.00 | 3.000 | .000 | .00 | 1 .0 |
| .014 | .3120 | | | | | .0046 | .00 | 1.51 | 1.08 | .51 | .013 | .00 | .00 | PIPE |
| WALL ENTRANCE | | | | | | | | | | | | | | |
| 204.060 | 103.000 | 1.569 | 104.569 | 23.70 | 6.33 | .62 | 105.19 | .00 | 1.57 | 3.00 | 3.000 | .000 | .00 | 0 .0 |

**PROJECT DESIGN CONSULTANTS**

PLANNING | LANDSCAPE ARCHITECTURE
ENVIRONMENTAL | ENGINEERING | SURVEY

WWW.PROJECTDESIGN.COM

PROJECT: QUARRY CREEK
SUBJECT: ENERGY DISSIPATION
PAGE: ____ OF ____ JOB NO.: 2468
DRAWN BY: CP DATE: 10/2/12
CHECKED BY: ____ DATE: ____

Impact Basin Design - HEC 14 Design Procedure : LINE C

$D = 3.0' = 36''$

$Q = 23.7$ cfs

Step 1) $V_o = 26.82$ fps (from WSPG output)

$A = Q/V_o = 0.88$ ft$^2$

$y_e = (A/2)^{1/2} = (0.88/2)^{1/2} = 0.66$ = equivalent depth of flow entering dissipator

Step 2) Compute $F_r$ and energy at end of pipe, $H_o$

$$F_r = \frac{V_o}{\sqrt{g y_e}} = \frac{26.82}{\sqrt{(32.2)(0.66)}} = 5.8$$

$$H_o = y_e + \frac{V_o^2}{2g} = 0.66 + \frac{(26.82)^2}{2(32.2)} = 11.83$$ (close enough to EGL-FL from WSPG output)

Step 3) Determine $H_o/W_B$ from Figure 9.14. Calculate reqd width of basin, $W_B$

$$W_B = \frac{H_o}{H_o/W_B} = \frac{11.83}{2.05} = 5.77$$ , Per RSD D-41, $W_B = 9.25$

Step 4) Dimensions per RSD D-41

Step 5) Determine exit velocity, $V_B$

$$H_B = \frac{Q}{W_B * V_B} + \frac{V_B^2}{2g} = H_o\left(1 - \frac{H_L}{H_o}\right), \quad \frac{H_L}{H_o} = 0.71 \text{ (Fig. 9.15)}$$

$$H_B = \frac{23.7}{9.25(V_B)} + \frac{V_B^2}{2(32.2)} = 11.83(1 - 0.71)$$

$V_B = 14.5$ fps, Use 1 ton riprap following the impact basin per D-40 velocity chart

shows the relationship of the Froude number to the ratio of the energy entering the dissipator to the width of dissipator required. The Los Angeles tests indicate that limited extrapolation of this curve is permissible.

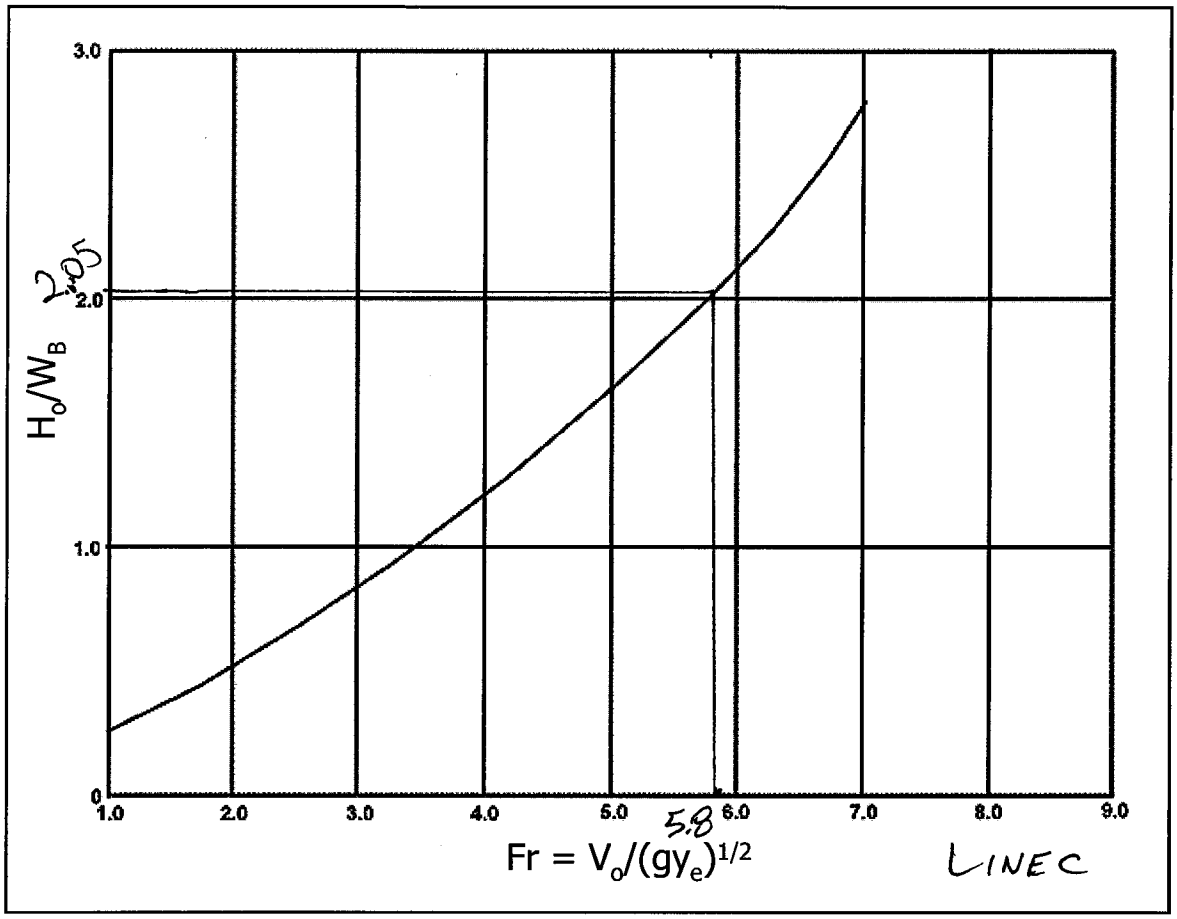


**Figure 9.14. Design Curve for USBR Type VI Impact Basin**

Once the basin width, $W_B$, has been determined, many of the other dimensions shown in Figure 9.13 follow according to Table 9.2. To use Table 9.2, round the value of $W_B$ to the nearest entry in the table to determine the other dimensions. Interpolation is not necessary.

In calculating the energy and the Froude number, the equivalent depth of flow, $y_e = (A/2)^{1/2}$, entering the dissipator from a pipe or irregular-shaped conduit must be computed. In other words, the cross section flow area in the pipe is converted into an equivalent rectangular cross section in which the width is twice the depth of flow. The conduit preceding the dissipator can be open, closed, or of any cross section.

The effectiveness of the basin is best illustrated by comparing the energy losses within the structure to those in a natural hydraulic jump, Figure 9.15. The energy loss was computed based on depth and velocity measurements made in the approach pipe and also in the downstream channel with no tailwater. Compared with the natural hydraulic jump, the USBR Type VI impact basin shows a greater capacity for dissipating energy.



From HEC 14

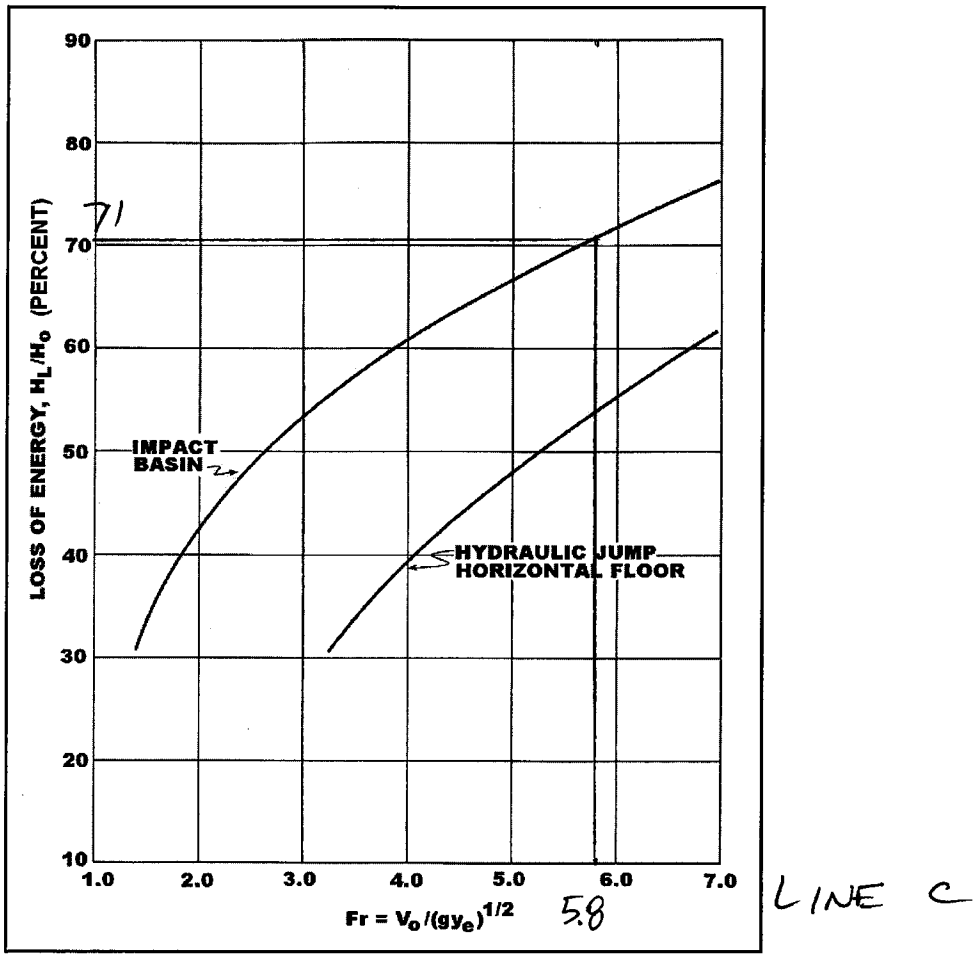


**Figure 9.15. Energy Loss of USBR Type VI Impact Basin versus Hydraulic Jump**

For erosion reduction and better basin operation, use the alternative end sill and 45° wingwall design as shown in Figure 9.13. The sill should be set as low as possible to prevent degradation downstream. For best performance, the downstream channel should be at the same elevation as the top of the sill. A slot should be placed in the end sill to provide for drainage during periods of low flow. Although the basin is depressed, the slot allows water to drain into the surrounding soil.

For protection against undermining, a cutoff wall should be added at the end of the basin. Its depth will depend on the type of soil present. Riprap should be placed downstream of the basin for a length of at least four conduit widths. For riprap size recommendations see Chapter 10.

The Los Angeles experiments simulated discharges up to 11.3 $m^3/s$ (400 $ft^3/s$) and entrance velocities as high as 15.2 m/s (50 ft/s). Therefore, use of the basin is limited to installations within these parameters. Velocities up to 15.2 m/s (50 ft/s) can be used without subjecting the structure to damage from cavitation forces. Some structures already constructed have exceeded these thresholds suggesting there may be some design flexibility. For larger installations where discharge is separable, two or more structures may be placed side by side. The USBR Type VI is not recommended where debris or ice buildup may cause substantial clogging.



From HEC14

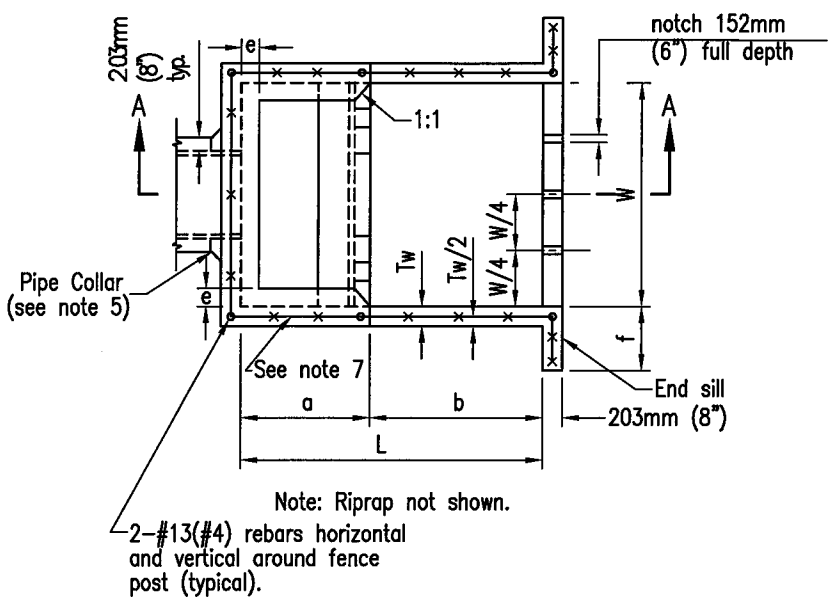


PLAN

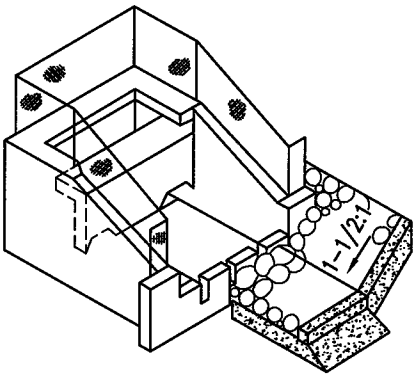


PICTORIAL VIEW

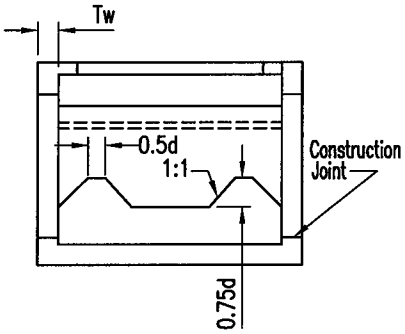


SECTION B-B

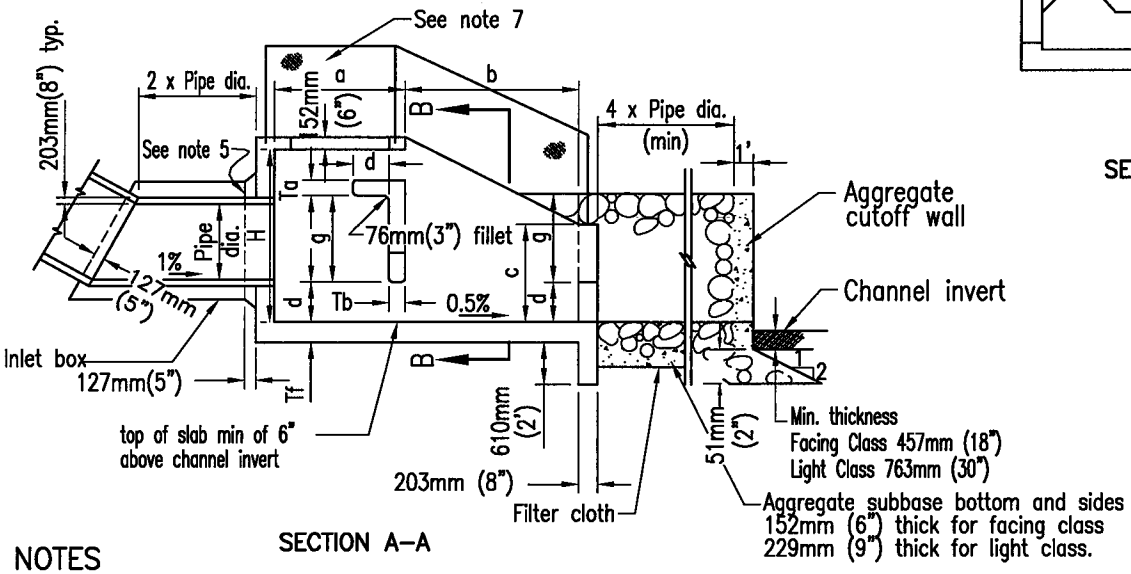


SECTION A-A

## NOTES

1. Design
   Equivalent Fluid Pressure (Earth Loading)= 961 kg/cu m (60 p.c.f.) Maximum Outlet velocity = 10.7m (35')/s
2. Concrete shall be 332 kg/$M^3$-C-22Mpa (560-C-3250)
3. Reinforcing shall conform to ASTM designation A615 and may be grade 40 or 60. Reinforcing shall be placed with 51mm (2") clear concrete cover unless noted otherwise. Splices shall not be permitted except as indicated on the plans.
4. For pipe grades not exceeding 20%, inlet box may be omitted.
5. If inlet box is omitted, construct pipe collar as shown.
6. Unless noted otherwise, all reinforcing bar bends shall be fabricated with standard hooks.
7. Five foot high chain link fencing, embed post 18" deep in walls and encase with class B mortar.
8. In Sandy and Silty soil:
   a) Riprap and aggregate base cutoff wall required at the end of rock apron.
   b) Filter cloth (Polyfilter X or equivalent) shall be installed on native soil base, minimum of 305mm (1 ft.) overlaps at joints.
9. Rip rap and subbase classification shall be as shown on plans.

**FOR DIMENSIONS, SEE D-41B.**

| Revision | By | Approved | Date | SAN DIEGO REGIONAL STANDARD DRAWING | RECOMMENDED BY THE SAN DIEGO REGIONAL STANDARDS COMMITTEE |
|---|---|---|---|---|---|
| ORIGINAL | | Kercheval | 12/75 | | |
| Add Metric | | T. Stanton | 03/03 | CONCRETE ENERGY DISSIPATER | T. Stanton 3/01/2003 |
| Reformatted | | T. Stanton | 04/06 | | Chairperson R.C.E. 19246 Date |
| Edited | | T. Stanton | 02/09 | | DRAWING NUMBER D-41A |
| | | | | | |

August 2009

## METRIC DIMENSIONS TABLE, FOR STRUCTURE DETAILS SEE D–41A.

| Pipe Dia | 457mm | 610mm | 9.14m | 11.0m | 12.80m | 14.63m | 16.46m | 18.29m | 21.95m |
|---|---|---|---|---|---|---|---|---|---|
| Area (sq. m) | .164 | .292 | .456 | .657 | .893 | 1.17 | .1.48 | 1.82 | 2.63 |
| Max. Q (cu m/s) | .594 | 1.08 | 1.67 | 2.41 | 3.26 | 4.28 | 5.41 | 6.68 | 9.60 |
| W | 1.66m | 1.80m | 2.13m | 2.82m | 3.20m | 3.58m | 3.96 | 4.34 | 5.03m |
| H | 1.30m | 1.60m | 1.90m | 2.21m | 2.44m | 2.74m | 2.87m | 3.28m | 3.73m |
| L | 2.24m | 2.74m | 3.25m | 3.76m | 4.27m | 4.78m | 5.28m | 5.79m | 6.71m |
| a | 991mm | 1.19m | 1.40m | 1.60m | 1.83m | 1.80m | 2.24m | 2.44m | 2.82m |
| b | 1.24m | 1.55m | 1.85m | 2.16m | 2.44m | 2.72m | 3.05m | 3.35m | 3.87m |
| c | 711mm | 864mm | 1.02m | 1.17m | 1.35m | 1.50m | 1.65m | 1.80m | 2.11m |
| d | 279mm | 356mm | 406mm | 482mm | 533mm | 610mm | 660mm | 737mm | 838mm |
| e | 152mm | 152mm | 203mm | 203mm | 254mm | 254mm | 305mm | 305mm | 381mm |
| f | 457mm | 610mm | 762mm | 914mm | 914mm | 914mm | 914mm | 914mm | 914mm |
| g | 635mm | 762mm | 914mm | 1.07m | 1.19m | 1.35m | 1.50m | 1.63m | 1.88m |
| Tf | 203mm | | | 254mm | | 305mm | | | |
| Tb | 178mm | | | 241mm | | 267mm | | | |
| Tw | 178mm | | | 241mm | | 267mm | | | |
| Ta | 178mm | | | 203mm | | | | | |

## US DIMENSIONS TABLE, FOR STRUCTURE DETAILS SEE D–41A.

| Pipe Dia (in) | 18 | 24 | 30 | 36 | 42 | 48 | 54 | 60 | 72 |
|---|---|---|---|---|---|---|---|---|---|
| Area (sq.ft.) | 1.77 | 3.14 | 4.91 | 7.07 | 9.62 | 12.57 | 15.90 | 19.63 | 28.27 |
| Max. Q (cfs) | 21 | 38 | 59 | 85 | 115 | 151 | 191 | 236 | 339 |
| W | 5'–6" | 6'–9" | 8'–0" | 9'–3" | 10'–6" | 11'–9" | 13'–0" | 14'–3" | 16'–6" |
| H | 4'–3" | 5'–3" | 6'–3" | 7'–3" | 8'–0" | 9'–0" | 9'–9" | 10'–9" | 12'–3" |
| L | 7'–4" | 9'–0" | 10'–8" | 12'–4" | 14'–0" | 15'–8" | 17'–4" | 19'–0" | 22'–0" |
| a | 3'–3" | 3'–11" | 4'–7" | 5'–3" | 6'–0" | 6'–9" | 7'–4" | 8'–0" | 9'–3" |
| b | 4'–1" | 5'–1" | 6'–1" | 7'–1" | 8'–0" | 8'–11" | 10'–0" | 11'–0" | 12'–9" |
| c | 2'–4" | 2'–10" | 3'–4" | 3'–10" | 4'–5" | 4'–11" | 5'–5" | 5'–11" | 6'–11" |
| d | 0'–11" | 1'–2" | 1'–4" | 1'–7" | 1'–9" | 2'–0" | 2'–2" | 2'–5" | 2'–9" |
| e | 0'–6" | 0'–6" | 0'–8" | 0'–8" | 0'–10" | 0'–10" | 1'–0" | 1'–0" | 1'–3" |
| f | 1'–6" | 2'–0" | 2'–6" | 3'–0" | 3'–0" | 3'–0" | 3'–0" | 3'–0" | 3'–0" |
| g | 2'–1" | 2'–6" | 3'–0" | 3'–6" | 3'–11" | 4'–5" | 4'–11" | 5'–4" | 6'–2" |
| Tf | 8" | | | 10" | | 12" | | | |
| Tb | 7" | | | 9 1/2" | | 10 1/2" | | | |
| Tw | 7" | | | 9 1/2" | | 10 1/2" | | | |
| Ta | 7" | | | 8" | | | | | |

| Revision | By | Approved | Date |
|---|---|---|---|
| ORIGINAL | | Kercheval | 12/75 |
| Add Metric | | T. Stanton | 03/03 |
| Reformatted | | T. Stanton | 04/06 |
| Edited | | T. Stanton | 02/09 |
| | | | |

SAN DIEGO REGIONAL STANDARD DRAWING

CONCRETE ENERGY DISSIPATER

RECOMMENDED BY THE SAN DIEGO REGIONAL STANDARDS COMMITTEE

T. Stanton 3/01/2003

Chairperson R.C.E. 19246 Date

DRAWING NUMBER D–41B

August 2009

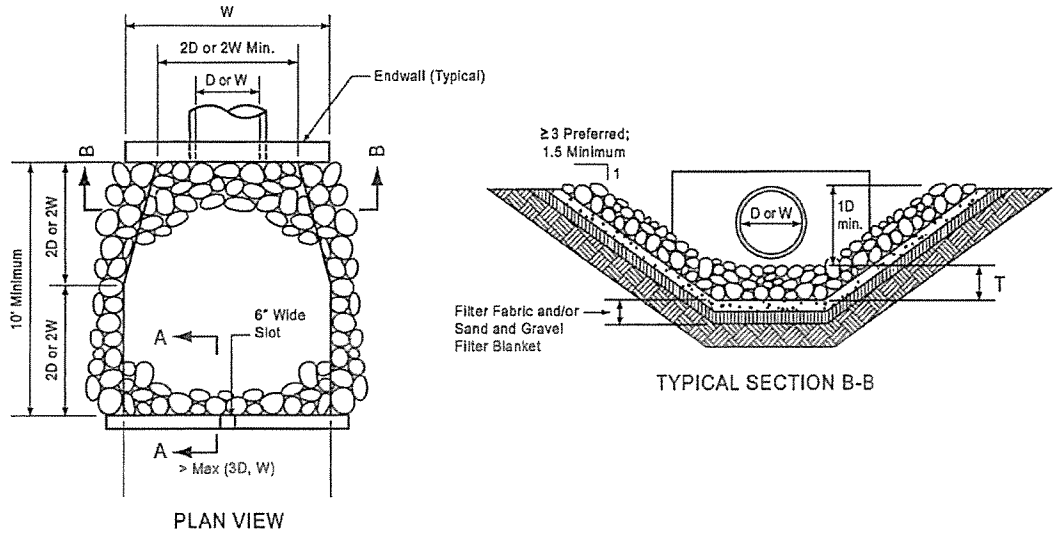


**Figure 7-1** San Diego Regional Standard Rock Riprap Apron Layout

Reclamation's *Design of Small Canal Structures*, and other references. The use of riprap, SAF, and CSU stilling basins are allowed, subject to the approval of the governing Agency.

### 7.3.3 Dissipator Rings

The use of dissipater rings in pipes and culverts can be an efficient manner to reduce exit velocities. FHWA HEC-14 provides a complete discussion of their use and design. Dissipater rings shall be modified to facilitate drainage behind the rings and prevent ponding within the culvert. The use of dissipater rings is limited to urban applications where velocities within the pipe are greater than 20 ft/sec and where no significant bedloads are anticipated, or where other methods of energy dissipation are impracticable.

### 7.3.4 Impact Basin (SD-RSD No. D-41)

Design standards for the impact basin depicted on San Diego Regional Standard Drawing No. D-41 are based on the USBR Type VI Basin. The original USBR basin has been modified to allow drainage of the basin during dry periods, which enhances the usefulness of the basin in urban environments. The width of D-41 is based on discharge from the storm drain or culvert; this width must be specified on drawings.

Figure 7-2 (FHWA HEC-14, 1983) provides a nomograph that may be used to estimate the energy loss through an impact basin. This energy loss can then be used to estimate the flow velocity exiting the impact basin. The energy loss through the impact basin is a function of the Froude Number of the flow entering the impact basin, calculated in this case as:

$$FR = v_O / \sqrt{g y_e} \qquad (7\text{-}2)$$

$$y_e = \sqrt{A/2} \qquad (7\text{-}3)$$

$$H_O = y_e + \frac{v_O^2}{2g} \qquad (7\text{-}4)$$

where ...

$FR$ = Froude Number of flow entering the impact basin;
$v_O$ = velocity of flow entering the dissipater (ft/s);
$g$ = gravitational acceleration (32.2 ft/s$^2$); and
$y_e$ = equivalent depth of flow entering the dissipator, (ft)
$A$ = area of flow entering the dissipater (ft$^2$); and
$H_O$ = kinetic energy of flow entering the dissipater (ft).

Information on the original hydraulic design reference can be found in the *Hydraulic Design of Stilling Basins for Pipe or Channel Outlets* (Peterka, 1984). The designer is encouraged to use the design guidelines contained within the Regional Standard Drawings.

## 7.4 REFERENCES

Bradley, J.N. and Peterka, A.J. (1957). "Hydraulic design of stilling basins." Journal of the Hydraulics Division, American Society of Civil Engineering **83**(5), 1–15.

California Department of Transportation (Caltrans). (June 1996). *California Bank and Shore Rock Slope Protection Design, Practitioner's Guide and Field Evaluation of Riprap Methods.* FHWA-CA-TL-95-10/Caltrans Study No. F90TL03.

U.S. Department of Transportation, Federal Highway Administration (FHWA). (1983). *Hydraulic Design of Energy Dissipators for Culverts and Channels.* Hydraulic Engineering Circular No. 14. FHWA Publication No. EPD-86-110. Washington, D.C.

U.S. Army Corps of Engineers. (1970). *Storm Drain Outlets, Riprap Energy Dissipators.* Hydraulic Design Criteria 722-4 to 722-7. Washington, D.C.

U.S. Army Corps of Engineers. (July 1, 1991). *Hydraulic Design of Flood Control Channels.* Engineer Manual EM 1110-2-1601. Washington, D.C.

U.S. Department of Interior, Bureau of Reclamation. (1978). *Design of Small Canal Structures.* Denver, Colorado.

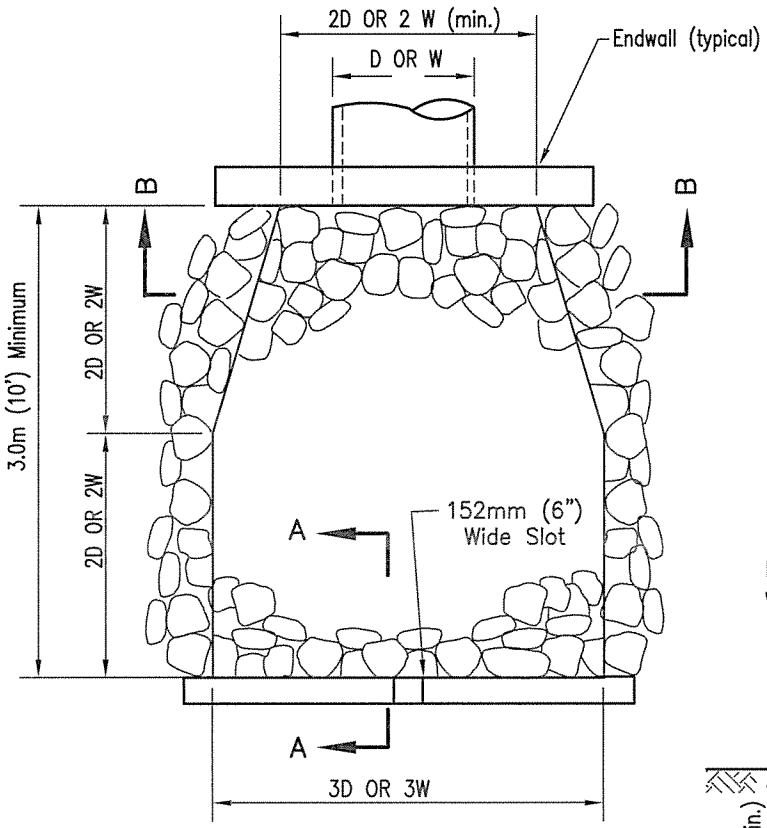


PLAN

| Design Velocity m/sec (ft/sec)* | Rock Classification | T (min) |
|---|---|---|
| 1.8–3 (6–10) | No. 2 Backing | 320mm (1.1ft) |
| 3–3.7 (10–12) | 220 kg (1/4 ton) | 823mm (2.7ft) |
| 3.7–4.3 (12–14) | 450 kg (1/2 ton) | 1.1m (3.5ft) |
| 4.3–4.9 (14–16) | 900 kg (1 ton) | 1.3m (4.4ft) |
| 4.9–5.5 (16–18) | 1.8 tonne (2 ton) | 1.6m (5.4ft) |

*over 5.5 mps (18 fps) requires special design

D = Pipe Diameter
W = Bottom Width of Channel

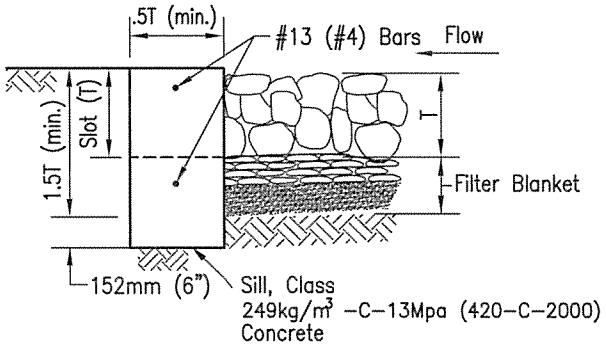


SECTION A–A

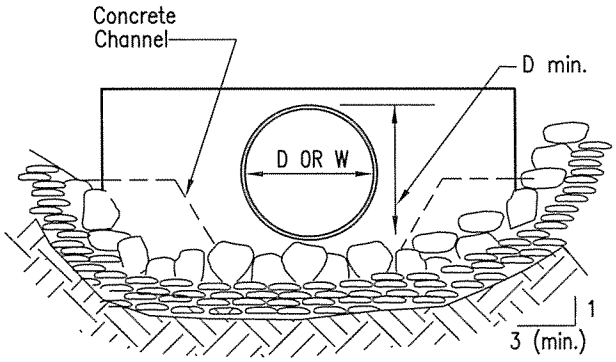


SECTION B–B

NOTES

1. Plans shall specify:
   A) Rock Class and thickness (T).
   B) Filter material, number of layers and thickness.
2. Rip rap shall be either quarry stone or broken concrete (if shown on the plans.) Cobbles are not acceptable.
3. Rip rap shall be placed over filter blanket which may be either granular material or filter fabric (woven filter slit film fabric shall not be used).
4. See Regional Supplement Amendments for selection of filter blanket.
5. Rip rap energy dissipators shall be designated as either Type 1 or Type 2. Type 1 shall be with concrete sill; Type 2 shall be without sill.

| Revision | By | Approved | Date |
|---|---|---|---|
| ORIGINAL | | Kercheval | 12/75 |
| Add Metric | | T. Stanton | 03/03 |
| Add Rip Rap Table | | S. Brady | 04/06 |
| Edited | | T. Stanton | 02/09 |
| | | | |

SAN DIEGO REGIONAL STANDARD DRAWING

RIP RAP
ENERGY DISSIPATER

RECOMMENDED BY THE SAN DIEGO REGIONAL STANDARDS COMMITTEE

T. Stanton 04/27/2006

Chairperson R.C.E. 19246 Date

DRAWING NUMBER D–40

August 2009

# Excerpts from Reclamation Plan Drainage Report:

# Asbuilt (Q-ultimate) WSPG models

Program Package Serial Number: 1559

WATER SURFACE PROFILE LISTING Date: 6-14-2011 Time: 7: 5:46

**South Coast Materials Quarry**
**Private Storm Drain Line-1**
**100-Year Storm Event**

| Station / L/Elem | Invert Elev / Ch Slope | Depth (FT) | Water Elev | Q (CFS) | Vel (FPS) | Vel Head / SF Ave | Energy Grd.El. / HF | Super Elev / SE Dpth | Critical Depth / Froude N | Flow Top Width / Norm Dp | Height/ Dia.-FT / "N" | Base Wt or I.D. / X-Fall | ZL / ZR | No Wth Prs/Pip / Type Ch |
|---|---|---|---|---|---|---|---|---|---|---|---|---|---|---|
| 101.830 | 85.010 | 2.153 | 87.163 | 216.20 | 26.73 | 11.09 | 98.26 | 1.69 | 4.18 | 4.95 | 5.000 | .000 | .00 | 1 .0 |
| 26.550 | .0625 | | | | | .0450 | 1.20 | 3.84 | 3.69 | 1.98 | .013 | .00 | .00 | PIPE |
| 128.380 | 86.670 | 2.191 | 88.861 | 216.20 | 26.12 | 10.59 | 99.45 | .00 | 4.18 | 4.96 | 5.000 | .000 | .00 | 1 .0 |
| 40.401 | .0625 | | | | | .0410 | 1.66 | 2.19 | 3.56 | 1.98 | .013 | .00 | .00 | PIPE |
| 168.781 | 89.195 | 2.271 | 91.466 | 216.20 | 24.91 | 9.64 | 101.10 | .00 | 4.18 | 4.98 | 5.000 | .000 | .00 | 1 .0 |
| 29.916 | .0625 | | | | | .0361 | 1.08 | 2.27 | 3.33 | 1.98 | .013 | .00 | .00 | PIPE |
| 198.698 | 91.065 | 2.356 | 93.421 | 216.20 | 23.75 | 8.76 | 102.18 | .00 | 4.18 | 4.99 | 5.000 | .000 | .00 | 1 .0 |
| 22.962 | .0625 | | | | | .0317 | .73 | 2.36 | 3.10 | 1.98 | .013 | .00 | .00 | PIPE |
| 221.660 | 92.500 | 2.446 | 94.946 | 216.20 | 22.65 | 7.96 | 102.91 | .00 | 4.18 | 5.00 | 5.000 | .000 | .00 | 1 .0 |
| 4.000 | .1250 | | | | | .0333 | .13 | 2.45 | 2.89 | 1.71 | .014 | .00 | .00 | PIPE |
| 225.660 | 93.000 | 2.498 | 95.498 | 216.20 | 22.05 | 7.55 | 103.05 | .00 | 4.18 | 5.00 | 5.000 | .000 | .00 | 1 .0 |
| 116.665 | .0294 | | | | | .0268 | 3.13 | 2.50 | 2.77 | 2.45 | .013 | .00 | .00 | PIPE |
| 342.325 | 96.427 | 2.543 | 98.970 | 216.20 | 21.54 | 7.21 | 106.18 | .00 | 4.18 | 5.00 | 5.000 | .000 | .00 | 1 .0 |
| 112.959 | .0294 | | | | | .0244 | 2.76 | 2.54 | 2.68 | 2.45 | .013 | .00 | .00 | PIPE |
| 455.284 | 99.745 | 2.641 | 102.386 | 216.20 | 20.54 | 6.55 | 108.94 | .00 | 4.18 | 4.99 | 5.000 | .000 | .00 | 1 .0 |
| 62.956 | .0294 | | | | | .0216 | 1.36 | 2.64 | 2.49 | 2.45 | .013 | .00 | .00 | PIPE |
| 518.241 | 101.594 | 2.744 | 104.338 | 216.20 | 19.58 | 5.95 | 110.29 | .00 | 4.18 | 4.98 | 5.000 | .000 | .00 | 1 .0 |
| 41.729 | .0294 | | | | | .0190 | .79 | 2.74 | 2.32 | 2.45 | .013 | .00 | .00 | PIPE |

Program Package Serial Number: 1559

WATER SURFACE PROFILE LISTING Date: 6-14-2011 Time: 7: 5:46

South Coast Materials Quarry
Private Storm Drain Line-1
100-Year Storm Event

| Station / L/Elem | Invert Elev / Ch Slope | Depth (FT) | Water Elev | Q (CFS) | Vel (FPS) | Vel Head / SF Ave | Energy Grd.El. / HF | Super Elev / SE Dpth | Critical Depth / Froude N | Flow Top Width / Norm Dp | Height/ Dia.-FT / "N" | Base Wt or I.D. / X-Fall | ZL / ZR | No Wth Prs/Pip / Type Ch |
|---|---|---|---|---|---|---|---|---|---|---|---|---|---|---|
| 559.970 | 102.820 | 2.854 | 105.674 | 216.20 | 18.67 | 5.41 | 111.09 | .00 | 4.18 | 4.95 | 5.000 | .000 | .00 | 1 .0 |
| 4.000 | .0825 | | | | | .0199 | .08 | 2.85 | 2.15 | 1.92 | .014 | .00 | .00 | PIPE |
| 563.970 | 103.150 | 2.927 | 106.077 | 216.20 | 18.11 | 5.09 | 111.17 | .00 | 4.18 | 4.93 | 5.000 | .000 | .00 | 1 .0 |
| 50.946 | .0125 | | | | | .0171 | .87 | 2.93 | 2.05 | 3.21 | .013 | .00 | .00 | PIPE |
| 614.916 | 103.786 | 2.857 | 106.643 | 216.20 | 18.64 | 5.40 | 112.04 | .00 | 4.18 | 4.95 | 5.000 | .000 | .00 | 1 .0 |
| 66.660 | .0125 | | | | | .0189 | 1.26 | 2.86 | 2.15 | 3.21 | .013 | .00 | .00 | PIPE |
| 681.576 | 104.619 | 2.748 | 107.367 | 216.20 | 19.55 | 5.94 | 113.30 | .00 | 4.18 | 4.98 | 5.000 | .000 | .00 | 1 .0 |
| 54.631 | .0125 | | | | | .0215 | 1.17 | 2.75 | 2.31 | 3.21 | .013 | .00 | .00 | PIPE |
| 736.207 | 105.301 | 2.645 | 107.946 | 216.20 | 20.51 | 6.53 | 114.48 | .00 | 4.18 | 4.99 | 5.000 | .000 | .00 | 1 .0 |
| 46.722 | .0125 | | | | | .0243 | 1.14 | 2.65 | 2.49 | 3.21 | .013 | .00 | .00 | PIPE |
| 782.929 | 105.884 | 2.546 | 108.430 | 216.20 | 21.51 | 7.18 | 115.61 | .00 | 4.18 | 5.00 | 5.000 | .000 | .00 | 1 .0 |
| 41.301 | .0125 | | | | | .0276 | 1.14 | 2.55 | 2.67 | 3.21 | .013 | .00 | .00 | PIPE |
| 824.230 | 106.400 | 2.453 | 108.853 | 216.20 | 22.56 | 7.90 | 116.75 | .00 | 4.18 | 5.00 | 5.000 | .000 | .00 | 1 .0 |
| 4.000 | .0825 | | | | | .0334 | .13 | 2.45 | 2.87 | 1.92 | .014 | .00 | .00 | PIPE |
| 828.230 | 106.730 | 2.481 | 109.211 | 216.20 | 22.24 | 7.68 | 116.89 | .00 | 4.18 | 5.00 | 5.000 | .000 | .00 | 1 .0 |
| 10.484 | .0769 | | | | | .0268 | .28 | 2.48 | 2.81 | 1.88 | .013 | .00 | .00 | PIPE |
| 838.714 | 107.536 | 2.562 | 110.098 | 216.20 | 21.34 | 7.07 | 117.17 | .00 | 4.18 | 5.00 | 5.000 | .000 | .00 | 1 .0 |
| 10.250 | .0769 | | | | | .0238 | .24 | 2.56 | 2.64 | 1.88 | .013 | .00 | .00 | PIPE |

South Coast Materials Quarry
Private Storm Drain Line-1
100-Year Storm Event

| Station / L/Elem | Invert Elev / Ch Slope | Depth (FT) | Water Elev | Q (CFS) | Vel (FPS) | Vel Head / SF Ave | Energy Grd.El. / HF | Super Elev / SE Dpth | Critical Depth / Froude N | Flow Top Width / Norm Dp | Height/ Dia.-FT / "N" | Base Wt or I.D. / X-Fall | ZL / ZR | No Wth Prs/Pip / Type Ch |
|---|---|---|---|---|---|---|---|---|---|---|---|---|---|---|
| 848.964 | 108.324 | 2.661 | 110.986 | 216.20 | 20.35 | 6.43 | 117.41 | .00 | 4.18 | 4.99 | 5.000 | .000 | .00 | 1 .0 |
| 8.598 | .0769 | | | | | .0210 | .18 | 2.66 | 2.46 | 1.88 | .013 | .00 | .00 | PIPE |
| 857.562 | 108.986 | 2.765 | 111.751 | 216.20 | 19.40 | 5.84 | 117.59 | .00 | 4.18 | 4.97 | 5.000 | .000 | .00 | 1 .0 |
| 7.221 | .0769 | | | | | .0186 | .13 | 2.77 | 2.28 | 1.88 | .013 | .00 | .00 | PIPE |
| 864.784 | 109.541 | 2.875 | 112.416 | 216.20 | 18.50 | 5.31 | 117.73 | .00 | 4.18 | 4.94 | 5.000 | .000 | .00 | 1 .0 |
| 6.066 | .0769 | | | | | .0164 | .10 | 2.88 | 2.12 | 1.88 | .013 | .00 | .00 | PIPE |
| 870.850 | 110.007 | 2.991 | 112.998 | 216.20 | 17.64 | 4.83 | 117.83 | .00 | 4.18 | 4.90 | 5.000 | .000 | .00 | 1 .0 |
| 5.067 | .0769 | | | | | .0145 | .07 | 2.99 | 1.97 | 1.88 | .013 | .00 | .00 | PIPE |
| 875.917 | 110.397 | 3.114 | 113.511 | 216.20 | 16.82 | 4.39 | 117.90 | .00 | 4.18 | 4.85 | 5.000 | .000 | .00 | 1 .0 |
| 4.203 | .0769 | | | | | .0129 | .05 | 3.11 | 1.82 | 1.88 | .013 | .00 | .00 | PIPE |
| 880.120 | 110.720 | 3.244 | 113.964 | 216.20 | 16.03 | 3.99 | 117.96 | .00 | 4.18 | 4.77 | 5.000 | .000 | .00 | 1 .0 |
| 3.419 | .0769 | | | | | .0114 | .04 | 3.24 | 1.68 | 1.88 | .013 | .00 | .00 | PIPE |
| 883.539 | 110.983 | 3.383 | 114.366 | 216.20 | 15.29 | 3.63 | 117.99 | .00 | 4.18 | 4.68 | 5.000 | .000 | .00 | 1 .0 |
| 2.691 | .0769 | | | | | .0102 | .03 | 3.38 | 1.55 | 1.88 | .013 | .00 | .00 | PIPE |
| 886.230 | 111.190 | 3.533 | 114.723 | 216.20 | 14.58 | 3.30 | 118.02 | .00 | 4.18 | 4.55 | 5.000 | .000 | .00 | 1 .0 |
| 1.020 | .0825 | | | | | .0108 | .01 | 3.53 | 1.42 | 1.92 | .014 | .00 | .00 | PIPE |
| 887.250 | 111.274 | 3.611 | 114.885 | 216.20 | 14.24 | 3.15 | 118.03 | .00 | 4.18 | 4.48 | 5.000 | .000 | .00 | 1 .0 |
| 1.615 | .0825 | | | | | .0100 | .02 | 3.61 | 1.36 | 1.92 | .014 | .00 | .00 | PIPE |

South Coast Materials Quarry
Private Storm Drain Line-1
100-Year Storm Event

| Station / L/Elem | Invert Elev / Ch Slope | Depth (FT) | Water Elev | Q (CFS) | Vel (FPS) | Vel Head / SF Ave | Energy Grd.El. / HF | Super Elev / SE Dpth | Critical Depth / Froude N | Flow Top Width / Norm Dp | Height/ Dia.-FT / "N" | Base Wt or I.D. / X-Fall | ZL / ZR | No Wth Prs/Pip / Type Ch |
|---|---|---|---|---|---|---|---|---|---|---|---|---|---|---|
| 888.866 | 111.407 | 3.780 | 115.188 | 216.20 | 13.57 | 2.86 | 118.05 | .00 | 4.18 | 4.29 | 5.000 | .000 | .00 | 1 .0 |
| 1.008 | .0825 | | | | | .0090 | .01 | 3.78 | 1.24 | 1.92 | .014 | .00 | .00 | PIPE |
| 889.874 | 111.491 | 3.966 | 115.457 | 216.20 | 12.94 | 2.60 | 118.06 | .00 | 4.18 | 4.05 | 5.000 | .000 | .00 | 1 .0 |
| .356 | .0825 | | | | | .0081 | .00 | 3.97 | 1.12 | 1.92 | .014 | .00 | .00 | PIPE |
| 890.230 | 111.520 | 4.177 | 115.697 | 216.20 | 12.34 | 2.36 | 118.06 | .00 | 4.18 | 3.71 | 5.000 | .000 | .00 | 1 .0 |
| WALL ENTRANCE | | | | | | | | | | | | | | |
| 890.230 | 111.520 | 7.764 | 119.284 | 216.20 | 4.64 | .33 | 119.62 | .00 | 3.43 | 6.00 | 7.000 | 6.000 | .00 | 0 .0 |
| .903 | .3640 | | | | | .0008 | .00 | 7.76 | .29 | .81 | .015 | .00 | .00 | RECTANG |
| 891.133 | 111.849 | 7.403 | 119.251 | 216.20 | 4.87 | .37 | 119.62 | .00 | 3.43 | 6.00 | 7.000 | 6.000 | .00 | 0 .0 |
| .848 | .3640 | | | | | .0009 | .00 | 7.40 | .32 | .81 | .015 | .00 | .00 | RECTANG |
| 891.980 | 112.157 | 7.058 | 119.215 | 216.20 | 5.11 | .40 | 119.62 | .00 | 3.43 | 6.00 | 7.000 | 6.000 | .00 | 0 .0 |
| .794 | .3640 | | | | | .0010 | .00 | 7.06 | .34 | .81 | .015 | .00 | .00 | RECTANG |
| 892.774 | 112.446 | 6.730 | 119.176 | 216.20 | 5.35 | .45 | 119.62 | .00 | 3.43 | 6.00 | 7.000 | 6.000 | .00 | 0 .0 |
| .014 | .3640 | | | | | .0011 | .00 | 6.73 | .36 | .81 | .015 | .00 | .00 | RECTANG |
| 892.788 | 112.451 | 6.724 | 119.175 | 216.20 | 5.36 | .45 | 119.62 | .00 | 3.43 | 6.00 | 7.000 | 6.000 | .00 | 0 .0 |
| HYDRAULIC JUMP | | | | | | | | | | | | | | |
| 892.788 | 112.451 | 1.462 | 113.913 | 216.20 | 24.65 | 9.44 | 123.35 | .00 | 3.43 | 6.00 | 7.000 | 6.000 | .00 | 0 .0 |
| 2.204 | .3640 | | | | | .0597 | .13 | 1.46 | 3.59 | .81 | .015 | .00 | .00 | RECTANG |

Program Package Serial Number: 1559

WATER SURFACE PROFILE LISTING Date: 6-14-2011 Time: 7: 5:46

South Coast Materials Quarry
Private Storm Drain Line-1
100-Year Storm Event

| Station / L/Elem | Invert Elev / Ch Slope | Depth (FT) | Water Elev | Q (CFS) | Vel (FPS) | Vel Head / SF Ave | Energy Grd.El. / HF | Super Elev / SE Dpth | Critical Depth / Froude N | Flow Top Width / Norm Dp | Height/ Dia.-FT / "N" | Base Wt or I.D. / X-Fall | ZL / ZR | No Wth Prs/Pip / Type Ch |
|---|---|---|---|---|---|---|---|---|---|---|---|---|---|---|
| 894.992 | 113.253 | 1.525 | 114.778 | 216.20 | 23.63 | 8.67 | 123.45 | .00 | 3.43 | 6.00 | 7.000 | 6.000 | .00 | 0 .0 |
| 2.292 | .3640 | | | | | .0525 | .12 | 1.52 | 3.37 | .81 | .015 | .00 | .00 | RECTANG |
| 897.284 | 114.088 | 1.599 | 115.687 | 216.20 | 22.53 | 7.88 | 123.57 | .00 | 3.43 | 6.00 | 7.000 | 6.000 | .00 | 0 .0 |
| 2.007 | .3640 | | | | | .0458 | .09 | 1.60 | 3.14 | .81 | .015 | .00 | .00 | RECTANG |
| 899.290 | 114.818 | 1.677 | 116.495 | 216.20 | 21.48 | 7.17 | 123.66 | .00 | 3.43 | 6.00 | 7.000 | 6.000 | .00 | 0 .0 |
| 1.758 | .3640 | | | | | .0400 | .07 | 1.68 | 2.92 | .81 | .015 | .00 | .00 | RECTANG |
| 901.048 | 115.458 | 1.759 | 117.217 | 216.20 | 20.48 | 6.51 | 123.73 | .00 | 3.43 | 6.00 | 7.000 | 6.000 | .00 | 0 .0 |
| 1.539 | .3640 | | | | | .0349 | .05 | 1.76 | 2.72 | .81 | .015 | .00 | .00 | RECTANG |
| 902.587 | 116.018 | 1.845 | 117.863 | 216.20 | 19.53 | 5.92 | 123.79 | .00 | 3.43 | 6.00 | 7.000 | 6.000 | .00 | 0 .0 |
| 1.344 | .3640 | | | | | .0305 | .04 | 1.85 | 2.53 | .81 | .015 | .00 | .00 | RECTANG |
| 903.931 | 116.507 | 1.935 | 118.442 | 216.20 | 18.62 | 5.38 | 123.83 | .00 | 3.43 | 6.00 | 7.000 | 6.000 | .00 | 0 .0 |
| 1.171 | .3640 | | | | | .0267 | .03 | 1.94 | 2.36 | .81 | .015 | .00 | .00 | RECTANG |
| 905.103 | 116.934 | 2.030 | 118.963 | 216.20 | 17.75 | 4.89 | 123.86 | .00 | 3.43 | 6.00 | 7.000 | 6.000 | .00 | 0 .0 |
| 1.015 | .3640 | | | | | .0233 | .02 | 2.03 | 2.20 | .81 | .015 | .00 | .00 | RECTANG |
| 906.118 | 117.303 | 2.129 | 119.432 | 216.20 | 16.93 | 4.45 | 123.88 | .00 | 3.43 | 6.00 | 7.000 | 6.000 | .00 | 0 .0 |
| .875 | .3640 | | | | | .0204 | .02 | 2.13 | 2.04 | .81 | .015 | .00 | .00 | RECTANG |
| 906.993 | 117.622 | 2.232 | 119.854 | 216.20 | 16.14 | 4.05 | 123.90 | .00 | 3.43 | 6.00 | 7.000 | 6.000 | .00 | 0 .0 |
| .748 | .3640 | | | | | .0179 | .01 | 2.23 | 1.90 | .81 | .015 | .00 | .00 | RECTANG |

South Coast Materials Quarry
Private Storm Drain Line-1
100-Year Storm Event

| Station / L/Elem | Invert Elev / Ch Slope | Depth (FT) | Water Elev | Q (CFS) | Vel (FPS) | Vel Head / SF Ave | Energy Grd.El. / HF | Super Elev / SE Dpth | Critical Depth / Froude N | Flow Top Width / Norm Dp | Height/ Dia.-FT / "N" | Base Wt or I.D. / X-Fall | ZL / ZR | No Wth Prs/Pip / Type Ch |
|---|---|---|---|---|---|---|---|---|---|---|---|---|---|---|
| 907.741 | 117.894 | 2.341 | 120.235 | 216.20 | 15.39 | 3.68 | 123.91 | .00 | 3.43 | 6.00 | 7.000 | 6.000 | .00 | 0 .0 |
| .632 | .3640 | | | | | .0157 | .01 | 2.34 | 1.77 | .81 | .015 | .00 | .00 | RECTANG |
| 908.373 | 118.124 | 2.456 | 120.580 | 216.20 | 14.67 | 3.34 | 123.92 | .00 | 3.43 | 6.00 | 7.000 | 6.000 | .00 | 0 .0 |
| .526 | .3640 | | | | | .0138 | .01 | 2.46 | 1.65 | .81 | .015 | .00 | .00 | RECTANG |
| 908.898 | 118.315 | 2.576 | 120.891 | 216.20 | 13.99 | 3.04 | 123.93 | .00 | 3.43 | 6.00 | 7.000 | 6.000 | .00 | 0 .0 |
| .428 | .3640 | | | | | .0121 | .01 | 2.58 | 1.54 | .81 | .015 | .00 | .00 | RECTANG |
| 909.326 | 118.471 | 2.701 | 121.172 | 216.20 | 13.34 | 2.76 | 123.94 | .00 | 3.43 | 6.00 | 7.000 | 6.000 | .00 | 0 .0 |
| .338 | .3640 | | | | | .0107 | .00 | 2.70 | 1.43 | .81 | .015 | .00 | .00 | RECTANG |
| 909.664 | 118.594 | 2.833 | 121.427 | 216.20 | 12.72 | 2.51 | 123.94 | .00 | 3.43 | 6.00 | 7.000 | 6.000 | .00 | 0 .0 |
| .254 | .3640 | | | | | .0094 | .00 | 2.83 | 1.33 | .81 | .015 | .00 | .00 | RECTANG |
| 909.918 | 118.686 | 2.971 | 121.658 | 216.20 | 12.13 | 2.28 | 123.94 | .00 | 3.43 | 6.00 | 7.000 | 6.000 | .00 | 0 .0 |
| .176 | .3640 | | | | | .0083 | .00 | 2.97 | 1.24 | .81 | .015 | .00 | .00 | RECTANG |
| 910.094 | 118.750 | 3.116 | 121.867 | 216.20 | 11.56 | 2.08 | 123.94 | .00 | 3.43 | 6.00 | 7.000 | 6.000 | .00 | 0 .0 |
| .103 | .3640 | | | | | .0073 | .00 | 3.12 | 1.15 | .81 | .015 | .00 | .00 | RECTANG |
| 910.196 | 118.788 | 3.269 | 122.056 | 216.20 | 11.02 | 1.89 | 123.94 | .00 | 3.43 | 6.00 | 7.000 | 6.000 | .00 | 0 .0 |
| .034 | .3640 | | | | | .0064 | .00 | 3.27 | 1.07 | .81 | .015 | .00 | .00 | RECTANG |
| 910.230 | 118.800 | 3.429 | 122.229 | 216.20 | 10.51 | 1.71 | 123.94 | .00 | 3.43 | 6.00 | 7.000 | 6.000 | .00 | 0 .0 |

Program Package Serial Number: 1559

WATER SURFACE PROFILE LISTING Date: 6-14-2011 Time: 7: 7:14

**South Coast Materials Quarry**
**Private Storm Drain Line-2**
**100-Year Storm Event**

| Station / L/Elem | Invert Elev / Ch Slope | Depth (FT) | Water Elev | Q (CFS) | Vel (FPS) | Vel Head / SF Ave | Energy Grd.El. / HF | Super Elev / SE Dpth | Critical Depth / Froude N | Flow Top Width / Norm Dp | Height/ Dia.-FT / "N" | Base Wt or I.D. / X-Fall | ZL / ZR | No Wth Prs/Pip / Type Ch |
|---|---|---|---|---|---|---|---|---|---|---|---|---|---|---|
| 100.000 | 85.010 | 1.702 | 86.712 | 159.70 | 27.09 | 11.39 | 98.10 | .00 | 3.62 | 4.74 | 5.000 | .000 | .00 | 1 .0 |
| 5.840 | .0050 | | | | | .0617 | .36 | 1.70 | 4.28 | 3.61 | .013 | .00 | .00 | PIPE |
| 105.840 | 85.039 | 1.683 | 86.722 | 159.70 | 27.50 | 11.75 | 98.47 | 1.45 | 3.62 | 4.73 | 5.000 | .000 | .00 | 1 .0 |
| 6.198 | .0050 | | | | | .0645 | .40 | 3.13 | 4.37 | 3.60 | .013 | .00 | .00 | PIPE |
| 112.038 | 85.070 | 1.663 | 86.733 | 159.70 | 27.95 | 12.13 | 98.87 | 1.49 | 3.62 | 4.71 | 5.000 | .000 | .00 | 1 .0 |
| 17.632 | .0050 | | | | | .0706 | 1.24 | 3.15 | 4.47 | 3.60 | .013 | .00 | .00 | PIPE |
| 129.670 | 85.158 | 1.607 | 86.765 | 159.70 | 29.32 | 13.35 | 100.11 | .00 | 3.62 | 4.67 | 5.000 | .000 | .00 | 1 .0 |
| 6.660 | .0050 | | | | | .0773 | .51 | 1.61 | 4.78 | 3.59 | .013 | .00 | .00 | PIPE |
| 136.330 | 85.191 | 1.585 | 86.776 | 159.70 | 29.87 | 13.85 | 100.63 | .00 | 3.62 | 4.65 | 5.000 | .000 | .00 | 1 .0 |
| 16.670 | .0050 | | | | | .0849 | 1.41 | 1.59 | 4.91 | 3.59 | .013 | .00 | .00 | PIPE |
| 153.000 | 85.275 | 1.531 | 86.806 | 159.70 | 31.32 | 15.23 | 102.04 | .00 | 3.62 | 4.61 | 5.000 | .000 | .00 | 1 .0 |
| 4.000 | .0825 | | | | | .1054 | .42 | 1.53 | 5.25 | 1.63 | .014 | .00 | .00 | PIPE |
| 157.000 | 85.605 | 1.528 | 87.133 | 159.70 | 31.42 | 15.33 | 102.46 | .00 | 3.62 | 4.61 | 5.000 | .000 | .00 | 1 .0 |
| 3.075 | .2633 | | | | | .0890 | .27 | 1.53 | 5.27 | 1.17 | .013 | .00 | .00 | PIPE |
| 160.075 | 86.415 | 1.548 | 87.963 | 159.70 | 30.85 | 14.78 | 102.74 | .00 | 3.62 | 4.62 | 5.000 | .000 | .00 | 1 .0 |
| 7.086 | .2633 | | | | | .0813 | .58 | 1.55 | 5.14 | 1.17 | .013 | .00 | .00 | PIPE |
| 167.161 | 88.281 | 1.602 | 89.883 | 159.70 | 29.41 | 13.43 | 103.32 | .00 | 3.62 | 4.67 | 5.000 | .000 | .00 | 1 .0 |
| 6.062 | .2633 | | | | | .0712 | .43 | 1.60 | 4.81 | 1.17 | .013 | .00 | .00 | PIPE |

Program Package Serial Number: 1559

WATER SURFACE PROFILE LISTING Date: 6-14-2011 Time: 7: 7:14

South Coast Materials Quarry
Private Storm Drain Line-2
100-Year Storm Event

| Station / L/Elem | Invert Elev / Ch Slope | Depth (FT) | Water Elev | Q (CFS) | Vel (FPS) | Vel Head / SF Ave | Energy Grd.El. / HF | Super Elev / SE Dpth | Critical Depth / Froude N | Flow Top Width / Norm Dp | Height/ Dia.-FT / "N" | Base Wt or I.D. / X-Fall | ZL / ZR | No Wth Prs/Pip / Type Ch |
|---|---|---|---|---|---|---|---|---|---|---|---|---|---|---|
| 173.224 | 89.877 | 1.659 | 91.536 | 159.70 | 28.05 | 12.21 | 103.75 | .00 | 3.62 | 4.71 | 5.000 | .000 | .00 | 1 .0 |
| 5.234 | .2633 | | | | | .0624 | .33 | 1.66 | 4.49 | 1.17 | .013 | .00 | .00 | PIPE |
| 178.457 | 91.255 | 1.718 | 92.973 | 159.70 | 26.74 | 11.10 | 104.08 | .00 | 3.62 | 4.75 | 5.000 | .000 | .00 | 1 .0 |
| 4.546 | .2633 | | | | | .0547 | .25 | 1.72 | 4.20 | 1.17 | .013 | .00 | .00 | PIPE |
| 183.004 | 92.452 | 1.779 | 94.231 | 159.70 | 25.50 | 10.09 | 104.32 | .00 | 3.62 | 4.79 | 5.000 | .000 | .00 | 1 .0 |
| 3.968 | .2633 | | | | | .0480 | .19 | 1.78 | 3.93 | 1.17 | .013 | .00 | .00 | PIPE |
| 186.972 | 93.497 | 1.842 | 95.339 | 159.70 | 24.31 | 9.18 | 104.52 | .00 | 3.62 | 4.82 | 5.000 | .000 | .00 | 1 .0 |
| 3.468 | .2633 | | | | | .0420 | .15 | 1.84 | 3.67 | 1.17 | .013 | .00 | .00 | PIPE |
| 190.440 | 94.410 | 1.909 | 96.319 | 159.70 | 23.18 | 8.34 | 104.66 | .00 | 3.62 | 4.86 | 5.000 | .000 | .00 | 1 .0 |
| 6.000 | .0550 | | | | | .0454 | .27 | 1.91 | 3.43 | 1.81 | .014 | .00 | .00 | PIPE |
| 196.440 | 94.740 | 1.914 | 96.654 | 159.70 | 23.10 | 8.28 | 104.94 | .00 | 3.62 | 4.86 | 5.000 | .000 | .00 | 1 .0 |
| 24.300 | .0559 | | | | | .0374 | .91 | 1.91 | 3.41 | 1.74 | .013 | .00 | .00 | PIPE |
| 220.740 | 96.099 | 1.958 | 98.057 | 159.70 | 22.40 | 7.79 | 105.85 | .00 | 3.62 | 4.88 | 5.000 | .000 | .00 | 1 .0 |
| 28.574 | .0559 | | | | | .0336 | .96 | 1.96 | 3.27 | 1.74 | .013 | .00 | .00 | PIPE |
| 249.314 | 97.696 | 2.029 | 99.725 | 159.70 | 21.36 | 7.08 | 106.81 | .00 | 3.62 | 4.91 | 5.000 | .000 | .00 | 1 .0 |
| 21.579 | .0559 | | | | | .0295 | .64 | 2.03 | 3.05 | 1.74 | .013 | .00 | .00 | PIPE |
| 270.894 | 98.902 | 2.103 | 101.005 | 159.70 | 20.36 | 6.44 | 107.45 | .00 | 3.62 | 4.94 | 5.000 | .000 | .00 | 1 .0 |
| 16.944 | .0559 | | | | | .0259 | .44 | 2.10 | 2.85 | 1.74 | .013 | .00 | .00 | PIPE |

South Coast Materials Quarry
Private Storm Drain Line-2
100-Year Storm Event

| Station / L/Elem | Invert Elev / Ch Slope | Depth (FT) | Water Elev | Q (CFS) | Vel (FPS) | Vel Head / SF Ave | Energy Grd.El. / HF | Super Elev / SE Dpth | Critical Depth / Froude N | Flow Top Width / Norm Dp | Height/ Dia.-FT / "N" | Base Wt or I.D. / X-Fall | ZL / ZR | No Wth Prs/Pip / Type Ch |
|---|---|---|---|---|---|---|---|---|---|---|---|---|---|---|
| 287.837 | 99.850 | 2.180 | 102.030 | 159.70 | 19.42 | 5.85 | 107.88 | .00 | 3.62 | 4.96 | 5.000 | .000 | .00 | 1 .0 |
| 13.603 | .0559 | | | | | .0228 | .31 | 2.18 | 2.66 | 1.74 | .013 | .00 | .00 | PIPE |
| 301.440 | 100.610 | 2.261 | 102.871 | 159.70 | 18.51 | 5.32 | 108.19 | .00 | 3.62 | 4.98 | 5.000 | .000 | .00 | 1 .0 |
| 6.000 | .0550 | | | | | .0240 | .14 | 2.26 | 2.48 | 1.81 | .014 | .00 | .00 | PIPE |
| 307.440 | 100.940 | 2.299 | 103.239 | 159.70 | 18.12 | 5.10 | 108.34 | .00 | 3.62 | 4.98 | 5.000 | .000 | .00 | 1 .0 |
| 18.541 | .0100 | | | | | .0207 | .38 | 2.30 | 2.40 | 2.83 | .013 | .00 | .00 | PIPE |
| 325.981 | 101.126 | 2.258 | 103.384 | 159.70 | 18.54 | 5.34 | 108.72 | .00 | 3.62 | 4.98 | 5.000 | .000 | .00 | 1 .0 |
| 35.271 | .0100 | | | | | .0228 | .81 | 2.26 | 2.48 | 2.83 | .013 | .00 | .00 | PIPE |
| 361.252 | 101.479 | 2.177 | 103.656 | 159.70 | 19.45 | 5.87 | 109.53 | .00 | 3.62 | 4.96 | 5.000 | .000 | .00 | 1 .0 |
| 31.899 | .0100 | | | | | .0260 | .83 | 2.18 | 2.66 | 2.83 | .013 | .00 | .00 | PIPE |
| 393.151 | 101.798 | 2.100 | 103.898 | 159.70 | 20.40 | 6.46 | 110.36 | .00 | 3.62 | 4.94 | 5.000 | .000 | .00 | 1 .0 |
| 29.176 | .0100 | | | | | .0296 | .86 | 2.10 | 2.85 | 2.83 | .013 | .00 | .00 | PIPE |
| 422.327 | 102.090 | 2.026 | 104.116 | 159.70 | 21.39 | 7.11 | 111.22 | .00 | 3.62 | 4.91 | 5.000 | .000 | .00 | 1 .0 |
| 26.956 | .0100 | | | | | .0337 | .91 | 2.03 | 3.06 | 2.83 | .013 | .00 | .00 | PIPE |
| 449.283 | 102.360 | 1.955 | 104.315 | 159.70 | 22.44 | 7.82 | 112.13 | .00 | 3.62 | 4.88 | 5.000 | .000 | .00 | 1 .0 |
| 25.094 | .0100 | | | | | .0385 | .96 | 1.96 | 3.27 | 2.83 | .013 | .00 | .00 | PIPE |
| 474.377 | 102.611 | 1.887 | 104.498 | 159.70 | 23.53 | 8.60 | 113.10 | .00 | 3.62 | 4.85 | 5.000 | .000 | .00 | 1 .0 |
| 23.494 | .0100 | | | | | .0438 | 1.03 | 1.89 | 3.50 | 2.83 | .013 | .00 | .00 | PIPE |

South Coast Materials Quarry
Private Storm Drain Line-2
100-Year Storm Event

| Station / L/Elem | Invert Elev / Ch Slope | Depth (FT) | Water Elev | Q (CFS) | Vel (FPS) | Vel Head / SF Ave | Energy Grd.El. / HF | Super Elev / SE Dpth | Critical Depth / Froude N | Flow Top Width / Norm Dp | Height/ Dia.-FT / "N" | Base Wt or I.D. / X-Fall | ZL / ZR | No Wth Prs/Pip / Type Ch |
|---|---|---|---|---|---|---|---|---|---|---|---|---|---|---|
| 497.870 | 102.846 | 1.822 | 104.668 | 159.70 | 24.68 | 9.46 | 114.13 | .00 | 3.62 | 4.81 | 5.000 | .000 | .00 | 1 .0 |
| 22.075 | .0100 | | | | | .0500 | 1.10 | 1.82 | 3.75 | 2.83 | .013 | .00 | .00 | PIPE |
| 519.945 | 103.067 | 1.759 | 104.826 | 159.70 | 25.89 | 10.40 | 115.23 | .00 | 3.62 | 4.78 | 5.000 | .000 | .00 | 1 .0 |
| 20.842 | .0100 | | | | | .0571 | 1.19 | 1.76 | 4.01 | 2.83 | .013 | .00 | .00 | PIPE |
| 540.787 | 103.275 | 1.699 | 104.975 | 159.70 | 27.15 | 11.45 | 116.42 | .00 | 3.62 | 4.74 | 5.000 | .000 | .00 | 1 .0 |
| 19.718 | .0100 | | | | | .0651 | 1.28 | 1.70 | 4.29 | 2.83 | .013 | .00 | .00 | PIPE |
| 560.505 | 103.473 | 1.641 | 105.114 | 159.70 | 28.47 | 12.59 | 117.70 | .00 | 3.62 | 4.70 | 5.000 | .000 | .00 | 1 .0 |
| 18.705 | .0100 | | | | | .0743 | 1.39 | 1.64 | 4.59 | 2.83 | .013 | .00 | .00 | PIPE |
| 579.210 | 103.660 | 1.585 | 105.245 | 159.70 | 29.86 | 13.85 | 119.09 | 1.69 | 3.62 | 4.65 | 5.000 | .000 | .00 | 1 .0 |
| 4.000 | .0825 | | | | | .0921 | .37 | 3.27 | 4.91 | 1.63 | .014 | .00 | .00 | PIPE |
| 583.210 | 103.990 | 1.583 | 105.573 | 159.70 | 29.91 | 13.89 | 119.47 | .00 | 3.62 | 4.65 | 5.000 | .000 | .00 | 1 .0 |
| 22.791 | .0596 | | | | | .0816 | 1.86 | 1.58 | 4.92 | 1.71 | .013 | .00 | .00 | PIPE |
| 606.001 | 105.348 | 1.562 | 106.910 | 159.70 | 30.45 | 14.40 | 121.31 | .00 | 3.62 | 4.63 | 5.000 | .000 | .00 | 1 .0 |
| 46.243 | .0596 | | | | | .0896 | 4.14 | 1.56 | 5.05 | 1.71 | .013 | .00 | .00 | PIPE |
| 652.245 | 108.103 | 1.509 | 109.612 | 159.70 | 31.94 | 15.84 | 125.45 | .00 | 3.62 | 4.59 | 5.000 | .000 | .00 | 1 .0 |
| 35.881 | .0596 | | | | | .1023 | 3.67 | 1.51 | 5.39 | 1.71 | .013 | .00 | .00 | PIPE |
| 688.126 | 110.241 | 1.459 | 111.700 | 159.70 | 33.50 | 17.42 | 129.12 | .00 | 3.62 | 4.55 | 5.000 | .000 | .00 | 1 .0 |
| 29.524 | .0596 | | | | | .1169 | 3.45 | 1.46 | 5.76 | 1.71 | .013 | .00 | .00 | PIPE |

Program Package Serial Number: 1559

WATER SURFACE PROFILE LISTING Date: 6-14-2011 Time: 7: 7:14

South Coast Materials Quarry
Private Storm Drain Line-2
100-Year Storm Event

| Station / L/Elem | Invert Elev / Ch Slope | Depth (FT) | Water Elev | Q (CFS) | Vel (FPS) | Vel Head / SF Ave | Energy Grd.El. / HF | Super Elev / SE Dpth | Critical Depth / Froude N | Flow Top Width / Norm Dp | Height/ Dia.-FT / "N" | Base Wt or I.D. / X-Fall | ZL / ZR | No Wth Prs/Pip / Type Ch |
|---|---|---|---|---|---|---|---|---|---|---|---|---|---|---|
| 717.650 | 112.000 | 1.410 | 113.410 | 159.70 | 35.13 | 19.17 | 132.58 | .00 | 3.62 | 4.50 | 5.000 | .000 | .00 | 1 .0 |
| 4.000 | .0825 | | | | | .1460 | .58 | 1.41 | 6.16 | 1.63 | .014 | .00 | .00 | PIPE |
| 721.650 | 112.330 | 1.403 | 113.733 | 159.70 | 35.37 | 19.43 | 133.16 | .00 | 3.62 | 4.49 | 5.000 | .000 | .00 | 1 .0 |
| 7.307 | .3470 | | | | | .1194 | .87 | 1.40 | 6.22 | 1.09 | .013 | .00 | .00 | PIPE |
| 728.957 | 114.866 | 1.450 | 116.316 | 159.70 | 33.77 | 17.71 | 134.03 | .00 | 3.62 | 4.54 | 5.000 | .000 | .00 | 1 .0 |
| 6.432 | .3470 | | | | | .1047 | .67 | 1.45 | 5.83 | 1.09 | .013 | .00 | .00 | PIPE |
| 735.390 | 117.098 | 1.501 | 118.599 | 159.70 | 32.20 | 16.10 | 134.70 | .00 | 3.62 | 4.58 | 5.000 | .000 | .00 | 1 .0 |
| 5.527 | .3470 | | | | | .0916 | .51 | 1.50 | 5.45 | 1.09 | .013 | .00 | .00 | PIPE |
| 740.917 | 119.016 | 1.553 | 120.569 | 159.70 | 30.70 | 14.64 | 135.21 | .00 | 3.62 | 4.63 | 5.000 | .000 | .00 | 1 .0 |
| 4.781 | .3470 | | | | | .0802 | .38 | 1.55 | 5.10 | 1.09 | .013 | .00 | .00 | PIPE |
| 745.698 | 120.676 | 1.608 | 122.284 | 159.70 | 29.27 | 13.31 | 135.59 | .00 | 3.62 | 4.67 | 5.000 | .000 | .00 | 1 .0 |
| 4.165 | .3470 | | | | | .0703 | .29 | 1.61 | 4.77 | 1.09 | .013 | .00 | .00 | PIPE |
| 749.863 | 122.121 | 1.665 | 123.786 | 159.70 | 27.91 | 12.10 | 135.88 | .00 | 3.62 | 4.71 | 5.000 | .000 | .00 | 1 .0 |
| 3.646 | .3470 | | | | | .0616 | .22 | 1.67 | 4.46 | 1.09 | .013 | .00 | .00 | PIPE |
| 753.509 | 123.386 | 1.724 | 125.110 | 159.70 | 26.61 | 11.00 | 136.11 | .00 | 3.62 | 4.75 | 5.000 | .000 | .00 | 1 .0 |
| 3.203 | .3470 | | | | | .0540 | .17 | 1.72 | 4.17 | 1.09 | .013 | .00 | .00 | PIPE |
| 756.711 | 124.498 | 1.785 | 126.283 | 159.70 | 25.37 | 10.00 | 136.28 | .00 | 3.62 | 4.79 | 5.000 | .000 | .00 | 1 .0 |
| 2.818 | .3470 | | | | | .0473 | .13 | 1.79 | 3.90 | 1.09 | .013 | .00 | .00 | PIPE |

South Coast Materials Quarry
Private Storm Drain Line-2
100-Year Storm Event

| Station / L/Elem | Invert Elev / Ch Slope | Depth (FT) | Water Elev | Q (CFS) | Vel (FPS) | Vel Head / SF Ave | Energy Grd.El. / HF | Super Elev / SE Dpth | Critical Depth / Froude N | Flow Top Width / Norm Dp | Height/ Dia.-FT / "N" | Base Wt or I.D. / X-Fall | ZL / ZR | No Wth Prs/Pip / Type Ch |
|---|---|---|---|---|---|---|---|---|---|---|---|---|---|---|
| 759.530 | 125.476 | 1.849 | 127.325 | 159.70 | 24.19 | 9.09 | 136.41 | .00 | 3.62 | 4.83 | 5.000 | .000 | .00 | 1 .0 |
| 2.488 | .3470 | | | | | .0415 | .10 | 1.85 | 3.65 | 1.09 | .013 | .00 | .00 | PIPE |
| 762.018 | 126.339 | 1.915 | 128.254 | 159.70 | 23.07 | 8.26 | 136.52 | .00 | 3.62 | 4.86 | 5.000 | .000 | .00 | 1 .0 |
| 2.192 | .3470 | | | | | .0364 | .08 | 1.92 | 3.41 | 1.09 | .013 | .00 | .00 | PIPE |
| 764.210 | 127.100 | 1.985 | 129.085 | 159.70 | 21.99 | 7.51 | 136.60 | 2.24 | 3.62 | 4.89 | 5.000 | .000 | .00 | 1 .0 |
| JUNCT STR | .1250 | | | | | .0438 | .18 | 4.23 | 3.18 | | .014 | .00 | .00 | PIPE |
| 768.210 | 127.600 | 1.680 | 129.280 | 118.90 | 21.97 | 7.49 | 136.77 | .00 | 3.21 | 4.35 | 4.500 | .000 | .00 | 1 .0 |
| .748 | .0821 | | | | | .0414 | .03 | 1.68 | 3.47 | 1.40 | .013 | .00 | .00 | PIPE |
| 768.958 | 127.661 | 1.682 | 129.344 | 118.90 | 21.92 | 7.46 | 136.81 | .00 | 3.21 | 4.35 | 4.500 | .000 | .00 | 1 .0 |
| 14.268 | .0821 | | | | | .0388 | .55 | 1.68 | 3.46 | 1.40 | .013 | .00 | .00 | PIPE |
| 783.226 | 128.833 | 1.742 | 130.575 | 118.90 | 20.90 | 6.78 | 137.36 | .00 | 3.21 | 4.38 | 4.500 | .000 | .00 | 1 .0 |
| 11.510 | .0821 | | | | | .0340 | .39 | 1.74 | 3.23 | 1.40 | .013 | .00 | .00 | PIPE |
| 794.737 | 129.779 | 1.805 | 131.584 | 118.90 | 19.93 | 6.17 | 137.75 | .00 | 3.21 | 4.41 | 4.500 | .000 | .00 | 1 .0 |
| 9.464 | .0821 | | | | | .0299 | .28 | 1.81 | 3.02 | 1.40 | .013 | .00 | .00 | PIPE |
| 804.201 | 130.556 | 1.871 | 132.427 | 118.90 | 19.00 | 5.61 | 138.03 | .00 | 3.21 | 4.44 | 4.500 | .000 | .00 | 1 .0 |
| 7.883 | .0821 | | | | | .0262 | .21 | 1.87 | 2.82 | 1.40 | .013 | .00 | .00 | PIPE |
| 812.083 | 131.204 | 1.940 | 133.144 | 118.90 | 18.12 | 5.10 | 138.24 | .00 | 3.21 | 4.46 | 4.500 | .000 | .00 | 1 .0 |
| 6.639 | .0821 | | | | | .0230 | .15 | 1.94 | 2.63 | 1.40 | .013 | .00 | .00 | PIPE |

South Coast Materials Quarry
Private Storm Drain Line-2
100-Year Storm Event

| Station / L/Elem | Invert Elev / Ch Slope | Depth (FT) | Water Elev | Q (CFS) | Vel (FPS) | Vel Head / SF Ave | Energy Grd.El. / HF | Super Elev / SE Dpth | Critical Depth / Froude N | Flow Top Width / Norm Dp | Height/ Dia.-FT / "N" | Base Wt or I.D. / X-Fall | ZL / ZR | No Wth Prs/Pip / Type Ch |
|---|---|---|---|---|---|---|---|---|---|---|---|---|---|---|
| 818.723 | 131.749 | 2.011 | 133.760 | 118.90 | 17.27 | 4.63 | 138.39 | .00 | 3.21 | 4.47 | 4.500 | .000 | .00 | 1 .0 |
| 5.594 | .0821 | | | | | .0202 | .11 | 2.01 | 2.45 | 1.40 | .013 | .00 | .00 | PIPE |
| 824.317 | 132.208 | 2.086 | 134.295 | 118.90 | 16.47 | 4.21 | 138.51 | .00 | 3.21 | 4.49 | 4.500 | .000 | .00 | 1 .0 |
| 4.725 | .0821 | | | | | .0178 | .08 | 2.09 | 2.29 | 1.40 | .013 | .00 | .00 | PIPE |
| 829.042 | 132.597 | 2.165 | 134.762 | 118.90 | 15.70 | 3.83 | 138.59 | .00 | 3.21 | 4.50 | 4.500 | .000 | .00 | 1 .0 |
| 4.004 | .0821 | | | | | .0157 | .06 | 2.17 | 2.13 | 1.40 | .013 | .00 | .00 | PIPE |
| 833.046 | 132.925 | 2.247 | 135.173 | 118.90 | 14.97 | 3.48 | 138.65 | .00 | 3.21 | 4.50 | 4.500 | .000 | .00 | 1 .0 |
| 3.373 | .0821 | | | | | .0138 | .05 | 2.25 | 1.99 | 1.40 | .013 | .00 | .00 | PIPE |
| 836.419 | 133.202 | 2.333 | 135.536 | 118.90 | 14.28 | 3.16 | 138.70 | .00 | 3.21 | 4.50 | 4.500 | .000 | .00 | 1 .0 |
| 2.811 | .0821 | | | | | .0122 | .03 | 2.33 | 1.85 | 1.40 | .013 | .00 | .00 | PIPE |
| 839.230 | 133.433 | 2.424 | 135.857 | 118.90 | 13.61 | 2.88 | 138.73 | .00 | 3.21 | 4.49 | 4.500 | .000 | .00 | 1 .0 |
| 2.333 | .0821 | | | | | .0107 | .03 | 2.42 | 1.72 | 1.40 | .013 | .00 | .00 | PIPE |
| 841.563 | 133.625 | 2.519 | 136.144 | 118.90 | 12.98 | 2.62 | 138.76 | .00 | 3.21 | 4.47 | 4.500 | .000 | .00 | 1 .0 |
| 1.887 | .0821 | | | | | .0095 | .02 | 2.52 | 1.60 | 1.40 | .013 | .00 | .00 | PIPE |
| 843.450 | 133.780 | 2.620 | 136.400 | 118.90 | 12.37 | 2.38 | 138.78 | .00 | 3.21 | 4.44 | 4.500 | .000 | .00 | 1 .0 |
| 1.355 | .0825 | | | | | .0098 | .01 | 2.62 | 1.48 | 1.46 | .014 | .00 | .00 | PIPE |
| 844.805 | 133.892 | 2.713 | 136.605 | 118.90 | 11.86 | 2.18 | 138.79 | .00 | 3.21 | 4.40 | 4.500 | .000 | .00 | 1 .0 |
| 1.173 | .0825 | | | | | .0087 | .01 | 2.71 | 1.39 | 1.46 | .014 | .00 | .00 | PIPE |

South Coast Materials Quarry
Private Storm Drain Line-2
100-Year Storm Event

| Station / L/Elem | Invert Elev / Ch Slope | Depth (FT) | Water Elev | Q (CFS) | Vel (FPS) | Vel Head / SF Ave | Energy Grd.El. / HF | Super Elev / SE Dpth | Critical Depth / Froude N | Flow Top Width / Norm Dp | Height/ Dia.-FT / "N" | Base Wt or I.D. / X-Fall | ZL / ZR | No Wth Prs/Pip / Type Ch |
|---|---|---|---|---|---|---|---|---|---|---|---|---|---|---|
| 845.979 | 133.989 | 2.825 | 136.814 | 118.90 | 11.31 | 1.99 | 138.80 | .00 | 3.21 | 4.35 | 4.500 | .000 | .00 | 1 .0 |
| .823 | .0825 | | | | | .0077 | .01 | 2.83 | 1.28 | 1.46 | .014 | .00 | .00 | PIPE |
| 846.801 | 134.057 | 2.944 | 137.001 | 118.90 | 10.78 | 1.81 | 138.81 | .00 | 3.21 | 4.28 | 4.500 | .000 | .00 | 1 .0 |
| .491 | .0825 | | | | | .0069 | .00 | 2.94 | 1.18 | 1.46 | .014 | .00 | .00 | PIPE |
| 847.292 | 134.097 | 3.071 | 137.168 | 118.90 | 10.28 | 1.64 | 138.81 | .00 | 3.21 | 4.19 | 4.500 | .000 | .00 | 1 .0 |
| .158 | .0825 | | | | | .0061 | .00 | 3.07 | 1.09 | 1.46 | .014 | .00 | .00 | PIPE |
| 847.450 | 134.110 | 3.209 | 137.319 | 118.90 | 9.80 | 1.49 | 138.81 | .00 | 3.21 | 4.07 | 4.500 | .000 | .00 | 1 .0 |

Program Package Serial Number: 1559

WATER SURFACE PROFILE LISTING Date: 5-23-2011 Time: 7:43:28

**South Coast Materials Quarry**
**Private Storm Drain Line-3**
**100-Year Storm Event**

| Station / L/Elem | Invert Elev / Ch Slope | Depth (FT) | Water Elev | Q (CFS) | Vel (FPS) | Vel Head / SF Ave | Energy Grd.El. / HF | Super Elev / SE Dpth | Critical Depth / Froude N | Flow Top Width / Norm Dp | Height/ Dia.-FT / "N" | Base Wt or I.D. / X-Fall | ZL / ZR | No Wth Prs/Pip / Type Ch |
|---|---|---|---|---|---|---|---|---|---|---|---|---|---|---|
| 88.760 | 71.260 | .790 | 72.050 | 32.50 | 19.95 | 6.18 | 78.23 | .00 | 1.76 | 2.93 | 3.500 | .000 | .00 | 1 .0 |
| 1.168 | .0050 | | | | | .0843 | .10 | .79 | 4.71 | 1.66 | .013 | .00 | .00 | PIPE |
| 89.928 | 71.266 | .786 | 72.052 | 32.50 | 20.10 | 6.28 | 78.33 | .00 | 1.76 | 2.92 | 3.500 | .000 | .00 | 1 .0 |
| 6.969 | .0050 | | | | | .0913 | .64 | .79 | 4.76 | 1.66 | .013 | .00 | .00 | PIPE |
| 96.897 | 71.301 | .760 | 72.061 | 32.50 | 21.09 | 6.90 | 78.96 | .00 | 1.76 | 2.89 | 3.500 | .000 | .00 | 1 .0 |
| 6.689 | .0050 | | | | | .1045 | .70 | .76 | 5.08 | 1.66 | .013 | .00 | .00 | PIPE |
| 103.586 | 71.334 | .735 | 72.069 | 32.50 | 22.11 | 7.59 | 79.66 | .00 | 1.76 | 2.85 | 3.500 | .000 | .00 | 1 .0 |
| 6.420 | .0050 | | | | | .1196 | .77 | .74 | 5.43 | 1.66 | .013 | .00 | .00 | PIPE |
| 110.005 | 71.366 | .711 | 72.077 | 32.50 | 23.19 | 8.35 | 80.43 | .00 | 1.76 | 2.82 | 3.500 | .000 | .00 | 1 .0 |
| 6.157 | .0050 | | | | | .1368 | .84 | .71 | 5.79 | 1.66 | .013 | .00 | .00 | PIPE |
| 116.163 | 71.397 | .687 | 72.084 | 32.50 | 24.33 | 9.19 | 81.27 | .00 | 1.76 | 2.78 | 3.500 | .000 | .00 | 1 .0 |
| 5.919 | .0050 | | | | | .1565 | .93 | .69 | 6.18 | 1.66 | .013 | .00 | .00 | PIPE |
| 122.082 | 71.427 | .665 | 72.092 | 32.50 | 25.51 | 10.11 | 82.20 | .00 | 1.76 | 2.75 | 3.500 | .000 | .00 | 1 .0 |
| 5.678 | .0050 | | | | | .1792 | 1.02 | .67 | 6.60 | 1.66 | .013 | .00 | .00 | PIPE |
| 127.760 | 71.455 | .644 | 72.099 | 32.50 | 26.76 | 11.12 | 83.22 | .00 | 1.76 | 2.71 | 3.500 | .000 | .00 | 1 .0 |
| 4.000 | .0825 | | | | | .1971 | .79 | .64 | 7.05 | .79 | .013 | .00 | .00 | PIPE |
| 131.760 | 71.785 | .635 | 72.420 | 32.50 | 27.32 | 11.59 | 84.01 | .00 | 1.76 | 2.70 | 3.500 | .000 | .00 | 1 .0 |
| 13.190 | .2367 | | | | | .1960 | 2.59 | .63 | 7.25 | .61 | .013 | .00 | .00 | PIPE |

Program Package Serial Number: 1559

WATER SURFACE PROFILE LISTING Date: 5-23-2011 Time: 7:43:28

South Coast Materials Quarry
Private Storm Drain Line-3
100-Year Storm Event

| Station / L/Elem | Invert Elev / Ch Slope | Depth (FT) | Water Elev | Q (CFS) | Vel (FPS) | Vel Head / SF Ave | Energy Grd.El. / HF | Super Elev / SE Dpth | Critical Depth / Froude N | Flow Top Width / Norm Dp | Height/ Dia.-FT / "N" | Base Wt or I.D. / X-Fall | ZL / ZR | No Wth Prs/Pip / Type Ch |
|---|---|---|---|---|---|---|---|---|---|---|---|---|---|---|
| 144.950 | 74.908 | .645 | 75.553 | 32.50 | 26.65 | 11.03 | 86.58 | .00 | 1.76 | 2.71 | 3.500 | .000 | .00 | 1 .0 |
| 16.481 | .2367 | | | | | .1772 | 2.92 | .65 | 7.01 | .61 | .013 | .00 | .00 | PIPE |
| 161.430 | 78.809 | .667 | 79.476 | 32.50 | 25.41 | 10.03 | 89.50 | .00 | 1.76 | 2.75 | 3.500 | .000 | .00 | 1 .0 |
| 10.859 | .2367 | | | | | .1548 | 1.68 | .67 | 6.57 | .61 | .013 | .00 | .00 | PIPE |
| 172.290 | 81.380 | .689 | 82.069 | 32.50 | 24.23 | 9.12 | 91.19 | .00 | 1.76 | 2.78 | 3.500 | .000 | .00 | 1 .0 |
| 7.931 | .2367 | | | | | .1353 | 1.07 | .69 | 6.15 | .61 | .013 | .00 | .00 | PIPE |
| 180.221 | 83.258 | .713 | 83.971 | 32.50 | 23.10 | 8.29 | 92.26 | .00 | 1.76 | 2.82 | 3.500 | .000 | .00 | 1 .0 |
| 6.156 | .2367 | | | | | .1182 | .73 | .71 | 5.76 | .61 | .013 | .00 | .00 | PIPE |
| 186.377 | 84.715 | .737 | 85.452 | 32.50 | 22.03 | 7.53 | 92.99 | .00 | 1.76 | 2.85 | 3.500 | .000 | .00 | 1 .0 |
| 4.946 | .2367 | | | | | .1033 | .51 | .74 | 5.40 | .61 | .013 | .00 | .00 | PIPE |
| 191.323 | 85.886 | .762 | 86.648 | 32.50 | 21.00 | 6.85 | 93.50 | .00 | 1.76 | 2.89 | 3.500 | .000 | .00 | 1 .0 |
| 4.075 | .2367 | | | | | .0903 | .37 | .76 | 5.06 | .61 | .013 | .00 | .00 | PIPE |
| 195.398 | 86.851 | .788 | 87.639 | 32.50 | 20.03 | 6.23 | 93.87 | .00 | 1.76 | 2.92 | 3.500 | .000 | .00 | 1 .0 |
| 3.416 | .2367 | | | | | .0789 | .27 | .79 | 4.74 | .61 | .013 | .00 | .00 | PIPE |
| 198.814 | 87.660 | .815 | 88.475 | 32.50 | 19.09 | 5.66 | 94.14 | .00 | 1.76 | 2.96 | 3.500 | .000 | .00 | 1 .0 |
| 2.902 | .2367 | | | | | .0690 | .20 | .82 | 4.44 | .61 | .013 | .00 | .00 | PIPE |
| 201.716 | 88.347 | .843 | 89.190 | 32.50 | 18.20 | 5.15 | 94.34 | .00 | 1.76 | 2.99 | 3.500 | .000 | .00 | 1 .0 |
| 2.488 | .2367 | | | | | .0604 | .15 | .84 | 4.15 | .61 | .013 | .00 | .00 | PIPE |

Program Package Serial Number: 1559

WATER SURFACE PROFILE LISTING Date: 5-23-2011 Time: 7:43:28

South Coast Materials Quarry
Private Storm Drain Line-3
100-Year Storm Event

| Station / L/Elem | Invert Elev / Ch Slope | Depth (FT) | Water Elev | Q (CFS) | Vel (FPS) | Vel Head / SF Ave | Energy Grd.El. / HF | Super Elev / SE Dpth | Critical Depth / Froude N | Flow Top Width / Norm Dp | Height/ Dia.-FT / "N" | Base Wt or I.D. / X-Fall | ZL / ZR | No Wth Prs/Pip / Type Ch |
|---|---|---|---|---|---|---|---|---|---|---|---|---|---|---|
| 204.204 | 88.936 | .872 | 89.808 | 32.50 | 17.36 | 4.68 | 94.49 | .00 | 1.76 | 3.03 | 3.500 | .000 | .00 | 1 .0 |
| 2.149 | .2367 | | | | | .0528 | .11 | .87 | 3.89 | .61 | .013 | .00 | .00 | PIPE |
| 206.353 | 89.444 | .902 | 90.346 | 32.50 | 16.55 | 4.25 | 94.60 | .00 | 1.76 | 3.06 | 3.500 | .000 | .00 | 1 .0 |
| 1.866 | .2367 | | | | | .0462 | .09 | .90 | 3.64 | .61 | .013 | .00 | .00 | PIPE |
| 208.219 | 89.886 | .933 | 90.819 | 32.50 | 15.78 | 3.87 | 94.69 | .00 | 1.76 | 3.10 | 3.500 | .000 | .00 | 1 .0 |
| 1.627 | .2367 | | | | | .0404 | .07 | .93 | 3.41 | .61 | .013 | .00 | .00 | PIPE |
| 209.846 | 90.271 | .965 | 91.237 | 32.50 | 15.05 | 3.51 | 94.75 | .00 | 1.76 | 3.13 | 3.500 | .000 | .00 | 1 .0 |
| 1.418 | .2367 | | | | | .0353 | .05 | .97 | 3.19 | .61 | .013 | .00 | .00 | PIPE |
| 211.264 | 90.607 | .999 | 91.606 | 32.50 | 14.35 | 3.20 | 94.80 | .00 | 1.76 | 3.16 | 3.500 | .000 | .00 | 1 .0 |
| 1.246 | .2367 | | | | | .0309 | .04 | 1.00 | 2.99 | .61 | .013 | .00 | .00 | PIPE |
| 212.511 | 90.902 | 1.033 | 91.935 | 32.50 | 13.68 | 2.90 | 94.84 | .00 | 1.76 | 3.19 | 3.500 | .000 | .00 | 1 .0 |
| 1.083 | .2367 | | | | | .0271 | .03 | 1.03 | 2.79 | .61 | .013 | .00 | .00 | PIPE |
| 213.594 | 91.159 | 1.070 | 92.229 | 32.50 | 13.04 | 2.64 | 94.87 | .00 | 1.76 | 3.23 | 3.500 | .000 | .00 | 1 .0 |
| .953 | .2367 | | | | | .0237 | .02 | 1.07 | 2.61 | .61 | .013 | .00 | .00 | PIPE |
| 214.547 | 91.384 | 1.107 | 92.491 | 32.50 | 12.43 | 2.40 | 94.89 | .00 | 1.76 | 3.26 | 3.500 | .000 | .00 | 1 .0 |
| .830 | .2367 | | | | | .0208 | .02 | 1.11 | 2.45 | .61 | .013 | .00 | .00 | PIPE |
| 215.377 | 91.581 | 1.146 | 92.727 | 32.50 | 11.86 | 2.18 | 94.91 | .00 | 1.76 | 3.28 | 3.500 | .000 | .00 | 1 .0 |
| .720 | .2367 | | | | | .0182 | .01 | 1.15 | 2.29 | .61 | .013 | .00 | .00 | PIPE |

Program Package Serial Number: 1559

WATER SURFACE PROFILE LISTING Date: 5-23-2011 Time: 7:43:28

South Coast Materials Quarry
Private Storm Drain Line-3
100-Year Storm Event

| Station / L/Elem | Invert Elev / Ch Slope | Depth (FT) | Water Elev | Q (CFS) | Vel (FPS) | Vel Head / SF Ave | Energy Grd.El. / HF | Super Elev / SE Dpth | Critical Depth / Froude N | Flow Top Width / Norm Dp | Height/ Dia.-FT / "N" | Base Wt or I.D. / X-Fall | ZL / ZR | No Wth Prs/Pip / Type Ch |
|---|---|---|---|---|---|---|---|---|---|---|---|---|---|---|
| 216.097 | 91.751 | 1.187 | 92.938 | 32.50 | 11.30 | 1.98 | 94.92 | .00 | 1.76 | 3.31 | 3.500 | .000 | .00 | 1 .0 |
| .627 | .2367 | | | | | .0159 | .01 | 1.19 | 2.14 | .61 | .013 | .00 | .00 | PIPE |
| 216.724 | 91.900 | 1.229 | 93.129 | 32.50 | 10.78 | 1.80 | 94.93 | .00 | 1.76 | 3.34 | 3.500 | .000 | .00 | 1 .0 |
| .539 | .2367 | | | | | .0140 | .01 | 1.23 | 2.00 | .61 | .013 | .00 | .00 | PIPE |
| 217.262 | 92.027 | 1.273 | 93.300 | 32.50 | 10.28 | 1.64 | 94.94 | .00 | 1.76 | 3.37 | 3.500 | .000 | .00 | 1 .0 |
| .464 | .2367 | | | | | .0123 | .01 | 1.27 | 1.87 | .61 | .013 | .00 | .00 | PIPE |
| 217.726 | 92.137 | 1.318 | 93.455 | 32.50 | 9.80 | 1.49 | 94.95 | .00 | 1.76 | 3.39 | 3.500 | .000 | .00 | 1 .0 |
| .387 | .2367 | | | | | .0107 | .00 | 1.32 | 1.75 | .61 | .013 | .00 | .00 | PIPE |
| 218.113 | 92.228 | 1.366 | 93.595 | 32.50 | 9.34 | 1.36 | 94.95 | .00 | 1.76 | 3.41 | 3.500 | .000 | .00 | 1 .0 |
| .322 | .2367 | | | | | .0094 | .00 | 1.37 | 1.63 | .61 | .013 | .00 | .00 | PIPE |
| 218.435 | 92.305 | 1.416 | 93.721 | 32.50 | 8.91 | 1.23 | 94.95 | .00 | 1.76 | 3.44 | 3.500 | .000 | .00 | 1 .0 |
| .267 | .2367 | | | | | .0083 | .00 | 1.42 | 1.52 | .61 | .013 | .00 | .00 | PIPE |
| 218.702 | 92.368 | 1.467 | 93.835 | 32.50 | 8.49 | 1.12 | 94.95 | .00 | 1.76 | 3.45 | 3.500 | .000 | .00 | 1 .0 |
| .208 | .2367 | | | | | .0073 | .00 | 1.47 | 1.42 | .61 | .013 | .00 | .00 | PIPE |
| 218.910 | 92.417 | 1.521 | 93.938 | 32.50 | 8.10 | 1.02 | 94.96 | .00 | 1.76 | 3.47 | 3.500 | .000 | .00 | 1 .0 |
| .159 | .2367 | | | | | .0064 | .00 | 1.52 | 1.33 | .61 | .013 | .00 | .00 | PIPE |
| 219.069 | 92.455 | 1.577 | 94.032 | 32.50 | 7.72 | .93 | 94.96 | .00 | 1.76 | 3.48 | 3.500 | .000 | .00 | 1 .0 |
| .109 | .2367 | | | | | .0056 | .00 | 1.58 | 1.24 | .61 | .013 | .00 | .00 | PIPE |

Program Package Serial Number: 1559

WATER SURFACE PROFILE LISTING Date: 5-23-2011 Time: 7:43:28

South Coast Materials Quarry
Private Storm Drain Line-3
100-Year Storm Event

| Station / L/Elem | Invert Elev / Ch Slope | Depth (FT) | Water Elev | Q (CFS) | Vel (FPS) | Vel Head / SF Ave | Energy Grd.El. / HF | Super Elev / SE Dpth | Critical Depth / Froude N | Flow Top Width / Norm Dp | Height/ Dia.-FT / "N" | Base Wt or I.D. / X-Fall | ZL / ZR | No Wth Prs/Pip / Type Ch |
|---|---|---|---|---|---|---|---|---|---|---|---|---|---|---|
| 219.178 | 92.481 | 1.636 | 94.117 | 32.50 | 7.36 | .84 | 94.96 | .00 | 1.76 | 3.49 | 3.500 | .000 | .00 | 1 .0 |
| .063 | .2367 | | | | | .0049 | .00 | 1.64 | 1.15 | .61 | .013 | .00 | .00 | PIPE |
| 219.240 | 92.495 | 1.698 | 94.193 | 32.50 | 7.02 | .76 | 94.96 | .00 | 1.76 | 3.50 | 3.500 | .000 | .00 | 1 .0 |
| .020 | .2367 | | | | | .0043 | .00 | 1.70 | 1.08 | .61 | .013 | .00 | .00 | PIPE |
| 219.260 | 92.500 | 1.764 | 94.264 | 32.50 | 6.69 | .69 | 94.96 | .00 | 1.76 | 3.50 | 3.500 | .000 | .00 | 1 .0 |
| WALL ENTRANCE | | | | | | | | | | | | | | |
| 219.260 | 92.500 | 2.474 | 94.974 | 32.50 | 3.28 | .17 | 95.14 | .00 | 1.27 | 4.00 | 9.000 | 4.000 | .00 | 0 .0 |

Program Package Serial Number: 1559

WATER SURFACE PROFILE LISTING Date: 5-23-2011 Time: 7:44:54

**South Coast Materials Quarry**
**Private Storm Drain Line-4**
**100-Year Storm Event**

| Station / L/Elem | Invert Elev / Ch Slope | Depth (FT) | Water Elev | Q (CFS) | Vel (FPS) | Vel Head / SF Ave | Energy Grd.El. / HF | Super Elev / SE Dpth | Critical Depth / Froude N | Flow Top Width / Norm Dp | Height/ Dia.-FT / "N" | Base Wt or I.D. / X-Fall | ZL / ZR | No Wth Prs/Pip / Type Ch |
|---|---|---|---|---|---|---|---|---|---|---|---|---|---|---|
| 100.000 | 86.030 | 1.584 | 87.614 | 83.10 | 19.64 | 5.99 | 93.61 | .00 | 2.84 | 3.48 | 3.500 | .000 | .00 | 1 .0 |
| 11.395 | .0543 | | | | | .0376 | .43 | 1.58 | 3.14 | 1.44 | .013 | .00 | .00 | PIPE |
| 111.395 | 86.649 | 1.606 | 88.255 | 83.10 | 19.29 | 5.78 | 94.03 | .00 | 2.84 | 3.49 | 3.500 | .000 | .00 | 1 .0 |
| 23.465 | .0543 | | | | | .0345 | .81 | 1.61 | 3.06 | 1.44 | .013 | .00 | .00 | PIPE |
| 134.860 | 87.924 | 1.666 | 89.590 | 83.10 | 18.39 | 5.25 | 94.84 | .00 | 2.84 | 3.50 | 3.500 | .000 | .00 | 1 .0 |
| 17.291 | .0543 | | | | | .0303 | .52 | 1.67 | 2.85 | 1.44 | .013 | .00 | .00 | PIPE |
| 152.150 | 88.863 | 1.729 | 90.592 | 83.10 | 17.54 | 4.78 | 95.37 | .00 | 2.84 | 3.50 | 3.500 | .000 | .00 | 1 .0 |
| 13.337 | .0543 | | | | | .0267 | .36 | 1.73 | 2.66 | 1.44 | .013 | .00 | .00 | PIPE |
| 165.487 | 89.587 | 1.795 | 91.383 | 83.10 | 16.72 | 4.34 | 95.72 | .00 | 2.84 | 3.50 | 3.500 | .000 | .00 | 1 .0 |
| 10.580 | .0543 | | | | | .0235 | .25 | 1.80 | 2.47 | 1.44 | .013 | .00 | .00 | PIPE |
| 176.067 | 90.162 | 1.864 | 92.026 | 83.10 | 15.94 | 3.95 | 95.97 | .00 | 2.84 | 3.49 | 3.500 | .000 | .00 | 1 .0 |
| 8.515 | .0543 | | | | | .0208 | .18 | 1.86 | 2.30 | 1.44 | .013 | .00 | .00 | PIPE |
| 184.583 | 90.625 | 1.937 | 92.562 | 83.10 | 15.20 | 3.59 | 96.15 | .00 | 2.84 | 3.48 | 3.500 | .000 | .00 | 1 .0 |
| 6.907 | .0543 | | | | | .0183 | .13 | 1.94 | 2.14 | 1.44 | .013 | .00 | .00 | PIPE |
| 191.490 | 91.000 | 2.015 | 93.015 | 83.10 | 14.49 | 3.26 | 96.28 | .00 | 2.84 | 3.46 | 3.500 | .000 | .00 | 1 .0 |
| .546 | .0660 | | | | | .0198 | .01 | 2.01 | 1.98 | 1.42 | .014 | .00 | .00 | PIPE |
| 192.036 | 91.036 | 2.023 | 93.059 | 83.10 | 14.42 | 3.23 | 96.29 | .00 | 2.84 | 3.46 | 3.500 | .000 | .00 | 1 .0 |
| 4.454 | .0660 | | | | | .0185 | .08 | 2.02 | 1.97 | 1.42 | .014 | .00 | .00 | PIPE |

South Coast Materials Quarry
Private Storm Drain Line-4
100-Year Storm Event

| Station / L/Elem | Invert Elev / Ch Slope | Depth (FT) | Water Elev | Q (CFS) | Vel (FPS) | Vel Head / SF Ave | Energy Grd.El. / HF | Super Elev / SE Dpth | Critical Depth / Froude N | Flow Top Width / Norm Dp | Height/ Dia.-FT / "N" | Base Wt or I.D. / X-Fall | ZL / ZR | No Wth Prs/Pip / Type | Ch |
|---|---|---|---|---|---|---|---|---|---|---|---|---|---|---|---|
| 196.490 | 91.330 | 2.105 | 93.435 | 83.10 | 13.75 | 2.93 | 96.37 | .00 | 2.84 | 3.43 | 3.500 | .000 | .00 | 1 | .0 |
| 87.041 | .0160 | | | | | .0143 | 1.24 | 2.11 | 1.82 | 2.06 | .013 | .00 | .00 | PIPE | |
| 283.531 | 92.724 | 2.175 | 94.899 | 83.10 | 13.22 | 2.71 | 97.61 | .00 | 2.84 | 3.40 | 3.500 | .000 | .00 | 1 | .0 |
| 48.695 | .0160 | | | | | .0128 | .62 | 2.18 | 1.71 | 2.06 | .013 | .00 | .00 | PIPE | |
| 332.227 | 93.503 | 2.266 | 95.769 | 83.10 | 12.61 | 2.47 | 98.24 | .00 | 2.84 | 3.34 | 3.500 | .000 | .00 | 1 | .0 |
| 27.474 | .0160 | | | | | .0114 | .31 | 2.27 | 1.58 | 2.06 | .013 | .00 | .00 | PIPE | |
| 359.701 | 93.943 | 2.363 | 96.306 | 83.10 | 12.02 | 2.24 | 98.55 | .00 | 2.84 | 3.28 | 3.500 | .000 | .00 | 1 | .0 |
| 16.814 | .0160 | | | | | .0101 | .17 | 2.36 | 1.46 | 2.06 | .013 | .00 | .00 | PIPE | |
| 376.515 | 94.212 | 2.468 | 96.680 | 83.10 | 11.46 | 2.04 | 98.72 | .00 | 2.84 | 3.19 | 3.500 | .000 | .00 | 1 | .0 |
| 10.529 | .0160 | | | | | .0090 | .10 | 2.47 | 1.34 | 2.06 | .013 | .00 | .00 | PIPE | |
| 387.044 | 94.381 | 2.580 | 96.961 | 83.10 | 10.93 | 1.85 | 98.81 | .00 | 2.84 | 3.08 | 3.500 | .000 | .00 | 1 | .0 |
| 5.631 | .0160 | | | | | .0081 | .05 | 2.58 | 1.23 | 2.06 | .013 | .00 | .00 | PIPE | |
| 392.675 | 94.471 | 2.704 | 97.175 | 83.10 | 10.42 | 1.69 | 98.86 | .00 | 2.84 | 2.93 | 3.500 | .000 | .00 | 1 | .0 |
| 1.815 | .0160 | | | | | .0073 | .01 | 2.70 | 1.11 | 2.06 | .013 | .00 | .00 | PIPE | |
| 394.490 | 94.500 | 2.843 | 97.343 | 83.10 | 9.93 | 1.53 | 98.87 | .00 | 2.84 | 2.73 | 3.500 | .000 | .00 | 1 | .0 |
| WALL ENTRANCE | | | | | | | | | | | | | | | |
| 394.490 | 94.500 | 5.007 | 99.507 | 83.10 | 4.15 | .27 | 99.77 | .00 | 2.38 | 4.00 | 8.000 | 4.000 | .00 | 0 | .0 |

Program Package Serial Number: 1559

WATER SURFACE PROFILE LISTING Date: 6-14-2011 Time: 7:24:10

**South Coast Materials Quarry**
**Private Storm Drain Line-5**
**100-Year Storm Event**

| Station / L/Elem | Invert Elev / Ch Slope | Depth (FT) | Water Elev | Q (CFS) | Vel (FPS) | Vel Head / SF Ave | Energy Grd.El. / HF | Super Elev / SE Dpth | Critical Depth / Froude N | Flow Top Width / Norm Dp | Height/ Dia.-FT / "N" | Base Wt or I.D. / X-Fall | ZL / ZR | No Wth Prs/Pip / Type Ch |
|---|---|---|---|---|---|---|---|---|---|---|---|---|---|---|
| 103.560 | 71.260 | 1.353 | 72.613 | 117.40 | 27.36 | 11.62 | 84.24 | .83 | 3.09 | 4.44 | 5.000 | .000 | .00 | 1 .0 |
| 11.360 | .0050 | | | | | .0837 | .95 | 2.18 | 4.91 | 2.90 | .013 | .00 | .00 | PIPE |
| 114.920 | 71.317 | 1.316 | 72.633 | 117.40 | 28.43 | 12.55 | 85.19 | .33 | 3.09 | 4.40 | 5.000 | .000 | .00 | 1 .0 |
| 4.453 | .0050 | | | | | .0901 | .40 | 1.65 | 5.17 | 2.90 | .013 | .00 | .00 | PIPE |
| 119.373 | 71.339 | 1.302 | 72.641 | 117.40 | 28.85 | 12.93 | 85.57 | .34 | 3.09 | 4.39 | 5.000 | .000 | .00 | 1 .0 |
| 13.364 | .0050 | | | | | .0985 | 1.32 | 1.64 | 5.28 | 2.90 | .013 | .00 | .00 | PIPE |
| 132.737 | 71.406 | 1.259 | 72.665 | 117.40 | 30.26 | 14.22 | 86.89 | .37 | 3.09 | 4.34 | 5.000 | .000 | .00 | 1 .0 |
| 12.823 | .0050 | | | | | .1127 | 1.44 | 1.63 | 5.64 | 2.90 | .013 | .00 | .00 | PIPE |
| 145.560 | 71.470 | 1.218 | 72.688 | 117.40 | 31.74 | 15.64 | 88.33 | 3.07 | 3.09 | 4.29 | 5.000 | .000 | .00 | 1 .0 |
| 4.000 | .0825 | | | | | .1409 | .56 | 4.29 | 6.03 | 1.39 | .014 | .00 | .00 | PIPE |
| 149.560 | 71.800 | 1.211 | 73.011 | 117.40 | 31.99 | 15.89 | 88.90 | .00 | 3.09 | 4.28 | 5.000 | .000 | .00 | 1 .0 |
| 2.264 | .3271 | | | | | .1202 | .27 | 1.21 | 6.09 | .95 | .013 | .00 | .00 | PIPE |
| 151.824 | 72.541 | 1.224 | 73.765 | 117.40 | 31.50 | 15.40 | 89.17 | .00 | 3.09 | 4.30 | 5.000 | .000 | .00 | 1 .0 |
| 6.264 | .3271 | | | | | .1102 | .69 | 1.22 | 5.96 | .95 | .013 | .00 | .00 | PIPE |
| 158.089 | 74.589 | 1.266 | 75.856 | 117.40 | 30.03 | 14.00 | 89.86 | .00 | 3.09 | 4.35 | 5.000 | .000 | .00 | 1 .0 |
| 5.332 | .3271 | | | | | .0964 | .51 | 1.27 | 5.58 | .95 | .013 | .00 | .00 | PIPE |
| 163.421 | 76.334 | 1.309 | 77.643 | 117.40 | 28.63 | 12.73 | 90.37 | .00 | 3.09 | 4.40 | 5.000 | .000 | .00 | 1 .0 |
| 4.578 | .3271 | | | | | .0843 | .39 | 1.31 | 5.22 | .95 | .013 | .00 | .00 | PIPE |

Program Package Serial Number: 1559

WATER SURFACE PROFILE LISTING Date: 6-14-2011 Time: 7:24:10

South Coast Materials Quarry
Private Storm Drain Line-5
100-Year Storm Event

| Station / L/Elem | Invert Elev / Ch Slope | Depth (FT) | Water Elev | Q (CFS) | Vel (FPS) | Vel Head / SF Ave | Energy Grd.El. / HF | Super Elev / SE Dpth | Critical Depth / Froude N | Flow Top Width / Norm Dp | Height/ Dia.-FT / "N" | Base Wt or I.D. / X-Fall | ZL / ZR | No Wth Prs/Pip / Type Ch |
|---|---|---|---|---|---|---|---|---|---|---|---|---|---|---|
| 167.999 | 77.831 | 1.355 | 79.186 | 117.40 | 27.30 | 11.57 | 90.76 | .00 | 3.09 | 4.44 | 5.000 | .000 | .00 | 1 .0 |
| 3.968 | .3271 | | | | | .0738 | .29 | 1.36 | 4.89 | .95 | .013 | .00 | .00 | PIPE |
| 171.968 | 79.129 | 1.402 | 80.531 | 117.40 | 26.03 | 10.52 | 91.05 | .00 | 3.09 | 4.49 | 5.000 | .000 | .00 | 1 .0 |
| 3.461 | .3271 | | | | | .0646 | .22 | 1.40 | 4.58 | .95 | .013 | .00 | .00 | PIPE |
| 175.428 | 80.261 | 1.450 | 81.711 | 117.40 | 24.82 | 9.56 | 91.28 | .00 | 3.09 | 4.54 | 5.000 | .000 | .00 | 1 .0 |
| 3.025 | .3271 | | | | | .0565 | .17 | 1.45 | 4.28 | .95 | .013 | .00 | .00 | PIPE |
| 178.454 | 81.250 | 1.501 | 82.751 | 117.40 | 23.66 | 8.69 | 91.45 | .00 | 3.09 | 4.58 | 5.000 | .000 | .00 | 1 .0 |
| 2.657 | .3271 | | | | | .0495 | .13 | 1.50 | 4.01 | .95 | .013 | .00 | .00 | PIPE |
| 181.110 | 82.119 | 1.554 | 83.673 | 117.40 | 22.56 | 7.90 | 91.58 | .00 | 3.09 | 4.63 | 5.000 | .000 | .00 | 1 .0 |
| 2.342 | .3271 | | | | | .0433 | .10 | 1.55 | 3.75 | .95 | .013 | .00 | .00 | PIPE |
| 183.452 | 82.885 | 1.608 | 84.493 | 117.40 | 21.51 | 7.19 | 91.68 | .00 | 3.09 | 4.67 | 5.000 | .000 | .00 | 1 .0 |
| 2.062 | .3271 | | | | | .0380 | .08 | 1.61 | 3.51 | .95 | .013 | .00 | .00 | PIPE |
| 185.515 | 83.560 | 1.665 | 85.225 | 117.40 | 20.51 | 6.53 | 91.76 | .00 | 3.09 | 4.71 | 5.000 | .000 | .00 | 1 .0 |
| 1.820 | .3271 | | | | | .0333 | .06 | 1.67 | 3.28 | .95 | .013 | .00 | .00 | PIPE |
| 187.335 | 84.155 | 1.724 | 85.879 | 117.40 | 19.56 | 5.94 | 91.82 | .00 | 3.09 | 4.75 | 5.000 | .000 | .00 | 1 .0 |
| 1.605 | .3271 | | | | | .0291 | .05 | 1.72 | 3.07 | .95 | .013 | .00 | .00 | PIPE |
| 188.940 | 84.680 | 1.786 | 86.466 | 117.40 | 18.65 | 5.40 | 91.86 | .00 | 3.09 | 4.79 | 5.000 | .000 | .00 | 1 .0 |
| JUNCT STR | .0833 | | | | | .0294 | .18 | 1.79 | 2.87 | | .014 | .00 | .00 | PIPE |

Program Package Serial Number: 1559

WATER SURFACE PROFILE LISTING Date: 6-14-2011 Time: 7:24:10

South Coast Materials Quarry
Private Storm Drain Line-5
100-Year Storm Event

| Station / L/Elem | Invert Elev / Ch Slope | Depth (FT) | Water Elev | Q (CFS) | Vel (FPS) | Vel Head / SF Ave | Energy Grd.El. / HF | Super Elev / SE Dpth | Critical Depth / Froude N | Flow Top Width / Norm Dp | Height/ Dia.-FT / "N" | Base Wt or I.D. / X-Fall | ZL / ZR | No Wth Prs/Pip / Type Ch |
|---|---|---|---|---|---|---|---|---|---|---|---|---|---|---|
| 194.940 | 85.180 | 1.949 | 87.129 | 117.40 | 17.78 | 4.91 | 92.04 | .00 | 3.19 | 4.46 | 4.500 | .000 | .00 | 1 .0 |
| 37.680 | .0289 | | | | | .0226 | .85 | 1.95 | 2.58 | 1.84 | .013 | .00 | .00 | PIPE |
| 232.620 | 86.270 | 1.993 | 88.263 | 117.40 | 17.26 | 4.63 | 92.89 | .00 | 3.19 | 4.47 | 4.500 | .000 | .00 | 1 .0 |
| 40.510 | .0289 | | | | | .0204 | .83 | 1.99 | 2.47 | 1.84 | .013 | .00 | .00 | PIPE |
| 273.130 | 87.441 | 2.068 | 89.509 | 117.40 | 16.46 | 4.20 | 93.71 | .00 | 3.19 | 4.49 | 4.500 | .000 | .00 | 1 .0 |
| 27.784 | .0289 | | | | | .0179 | .50 | 2.07 | 2.30 | 1.84 | .013 | .00 | .00 | PIPE |
| 300.914 | 88.244 | 2.145 | 90.389 | 117.40 | 15.69 | 3.82 | 94.21 | .00 | 3.19 | 4.50 | 4.500 | .000 | .00 | 1 .0 |
| 20.278 | .0289 | | | | | .0158 | .32 | 2.15 | 2.14 | 1.84 | .013 | .00 | .00 | PIPE |
| 321.192 | 88.831 | 2.226 | 91.057 | 117.40 | 14.96 | 3.48 | 94.53 | .00 | 3.19 | 4.50 | 4.500 | .000 | .00 | 1 .0 |
| 15.365 | .0289 | | | | | .0139 | .21 | 2.23 | 2.00 | 1.84 | .013 | .00 | .00 | PIPE |
| 336.557 | 89.275 | 2.311 | 91.586 | 117.40 | 14.26 | 3.16 | 94.75 | .00 | 3.19 | 4.50 | 4.500 | .000 | .00 | 1 .0 |
| 11.824 | .0289 | | | | | .0122 | .14 | 2.31 | 1.86 | 1.84 | .013 | .00 | .00 | PIPE |
| 348.381 | 89.617 | 2.401 | 92.018 | 117.40 | 13.60 | 2.87 | 94.89 | .00 | 3.19 | 4.49 | 4.500 | .000 | .00 | 1 .0 |
| 9.221 | .0289 | | | | | .0108 | .10 | 2.40 | 1.73 | 1.84 | .013 | .00 | .00 | PIPE |
| 357.602 | 89.883 | 2.495 | 92.378 | 117.40 | 12.97 | 2.61 | 94.99 | .00 | 3.19 | 4.47 | 4.500 | .000 | .00 | 1 .0 |
| 7.137 | .0289 | | | | | .0095 | .07 | 2.50 | 1.61 | 1.84 | .013 | .00 | .00 | PIPE |
| 364.739 | 90.090 | 2.594 | 92.684 | 117.40 | 12.36 | 2.37 | 95.06 | .00 | 3.19 | 4.45 | 4.500 | .000 | .00 | 1 .0 |
| 5.454 | .0289 | | | | | .0084 | .05 | 2.59 | 1.49 | 1.84 | .013 | .00 | .00 | PIPE |

Program Package Serial Number: 1559

WATER SURFACE PROFILE LISTING Date: 6-14-2011 Time: 7:24:10

South Coast Materials Quarry
Private Storm Drain Line-5
100-Year Storm Event

| Station / L/Elem | Invert Elev / Ch Slope | Depth (FT) | Water Elev | Q (CFS) | Vel (FPS) | Vel Head / SF Ave | Energy Grd.El. / HF | Super Elev / SE Dpth | Critical Depth / Froude N | Flow Top Width / Norm Dp | Height/ Dia.-FT / "N" | Base Wt or I.D. / X-Fall | ZL / ZR | No Wth Prs/Pip / Type Ch |
|---|---|---|---|---|---|---|---|---|---|---|---|---|---|---|
| 370.194 | 90.247 | 2.698 | 92.945 | 117.40 | 11.79 | 2.16 | 95.10 | .00 | 3.19 | 4.41 | 4.500 | .000 | .00 | 1 .0 |
| 3.968 | .0289 | | | | | .0075 | .03 | 2.70 | 1.38 | 1.84 | .013 | .00 | .00 | PIPE |
| 374.162 | 90.362 | 2.809 | 93.171 | 117.40 | 11.24 | 1.96 | 95.13 | .00 | 3.19 | 4.36 | 4.500 | .000 | .00 | 1 .0 |
| 2.704 | .0289 | | | | | .0066 | .02 | 2.81 | 1.28 | 1.84 | .013 | .00 | .00 | PIPE |
| 376.866 | 90.440 | 2.927 | 93.367 | 117.40 | 10.72 | 1.78 | 95.15 | .00 | 3.19 | 4.29 | 4.500 | .000 | .00 | 1 .0 |
| 1.567 | .0289 | | | | | .0059 | .01 | 2.93 | 1.18 | 1.84 | .013 | .00 | .00 | PIPE |
| 378.433 | 90.486 | 3.053 | 93.539 | 117.40 | 10.22 | 1.62 | 95.16 | .00 | 3.19 | 4.20 | 4.500 | .000 | .00 | 1 .0 |
| .497 | .0289 | | | | | .0052 | .00 | 3.05 | 1.09 | 1.84 | .013 | .00 | .00 | PIPE |
| 378.930 | 90.500 | 3.190 | 93.690 | 117.40 | 9.74 | 1.47 | 95.16 | .00 | 3.19 | 4.09 | 4.500 | .000 | .00 | 1 .0 |
| WALL ENTRANCE | | | | | | | | | | | | | | |
| 378.930 | 90.500 | 3.934 | 94.434 | 117.40 | 7.46 | .86 | 95.30 | .00 | 2.99 | 4.00 | 10.000 | 4.000 | .00 | 0 .0 |

5

# APPENDIX 5

## Drainage Exhibits

## LEGEND

| | |
|---|---|
| DRAINAGE SUBAREA | |
| HYDROLOGY NODE | # |
| AREA FROM UPSTREAM TO DOWNSTREAM NODE | X.XX Ac. |
| DRAINAGE FLOWPATH | |
| FLOW DIRECTION | |

FOR CONTINUATION, SEE EXHIBIT A-2

SCALE: 1"=100'

JOB #: 2468

CREATED: 9/12/11

PREPARED BY:

PROJECT DESIGN CONSULTANTS
Planning | Landscape Architecture | Engineering | Survey
701 B Street, Suite 800
San Diego, CA 92101
619.236.0471 Tel
619.234.0349 Fax

**CITY OF CARLSBAD**

**QUARRY CREEK**

DRAINAGE MAP
EXISTING CONDITIONS
EXHIBIT A-1

P:\2468\ENGR\REPORTS\DRAIN-TM\EXH\Exhi-Exh-A1-A2-A3.dwg 10/4/2012 3:48:32 PM

FOR CONTINUATION, SEE EXHIBIT A-1

FOR CONTINUATION, SEE EXHIBIT A-3

FOR CONTINUATION, SEE EXHIBIT A-3

SCALE: 1"=100'

JOB #: 2468

CREATED: 9/12/11

PREPARED BY:

PROJECT DESIGN CONSULTANTS
Planning | Landscape Architecture | Engineering | Survey

701 B Street, Suite 800
San Diego, CA 92101
619.235.6471 Tel
619.234.0349 Fax

**CITY OF CARLSBAD**

**QUARRY CREEK**

*DRAINAGE MAP*
*EXISTING CONDITIONS*
*EXHIBIT A-2*

FOR CONTINUATION, SEE EXHIBIT A-2

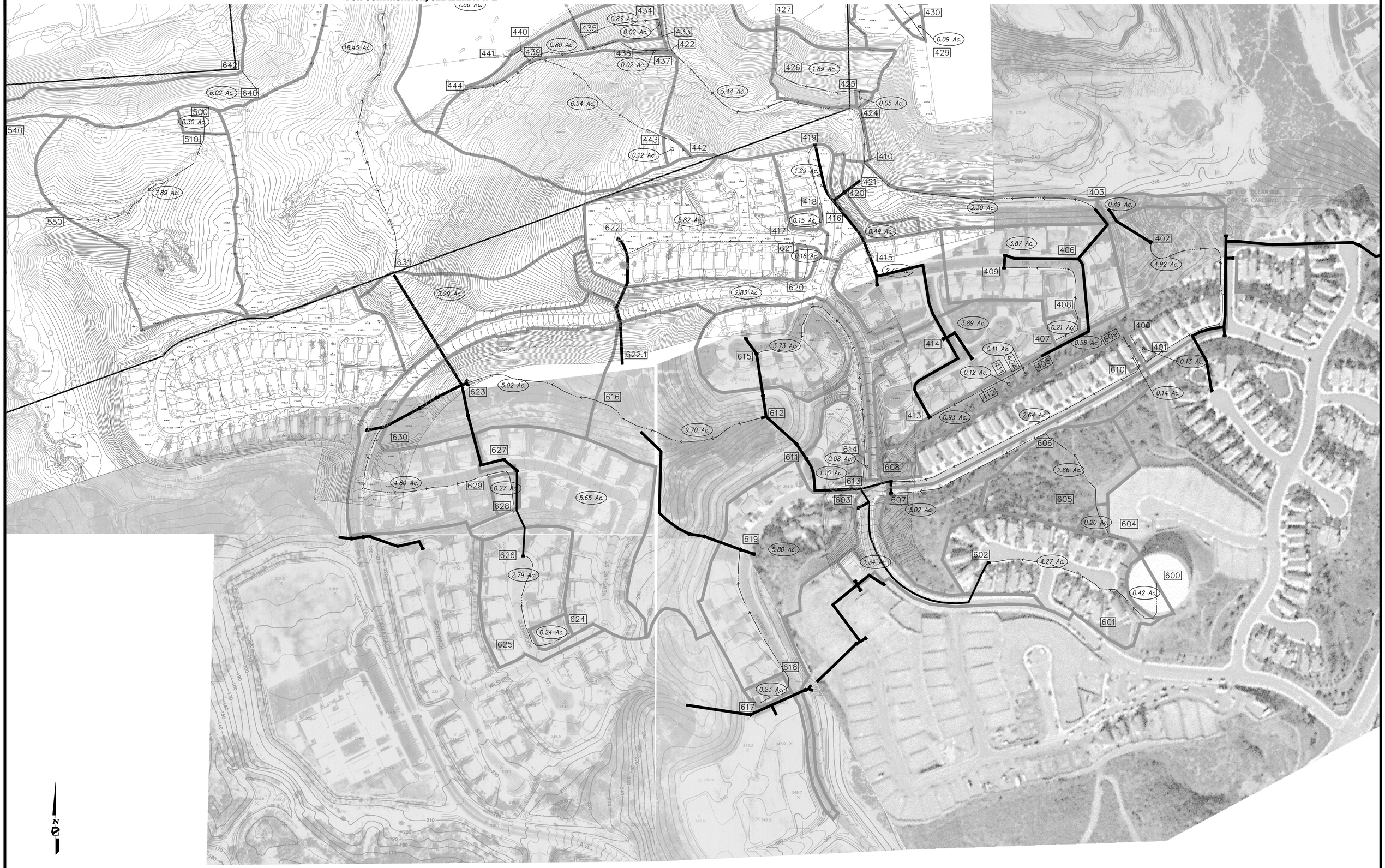


## LEGEND

| | |
|---|---|
| DRAINAGE SUBAREA | |
| HYDROLOGY NODE | # |
| AREA FROM UPSTREAM TO DOWNSTREAM NODE | X.XX Ac. |
| DRAINAGE FLOWPATH | |
| FLOW DIRECTION | |

| | | | |
|---|---|---|---|
| SCALE: 1"=100' | PREPARED BY: | | CITY OF CARLSBAD |
| JOB #: 2468 | PROJECT DESIGN CONSULTANTS<br>Planning I Landscape Architecture I Engineering I Survey | 701 B Street, Suite 800<br>San Diego, CA 92101<br>619.235.6471 Tel<br>619.234.0349 Fax | QUARRY CREEK |
| CREATED: 9/12/11 | | | DRAINAGE MAP<br>EXISTING CONDITIONS<br>EXHIBIT A-3 |

P:\2468\ENGR\REPORTS\DRAIN-TM\EXH\Exist-Exh-A1+A2+A3.dwg 10/4/2012 4:33:10 PM

FOR CONTINUATION, SEE EXHIBIT A-1

FOR CONTINUATION, SEE EXHIBIT A-3

FOR CONTINUATION, SEE EXHIBIT A-3

NOTE: DRAINAGE FLOWS LABELED AS Qp REPRESENT PROPOSED DRAINAGE FLOWS PER THIS PROJECT. DRAINAGE FLOWS LABELED AS Qu REPRESENT ULTIMATE (AS-BUILT) DRAINAGE FLOWS PER DWG. 470-5A (RECLAMATION GRADING PLAN).

| | | | |
|---|---|---|---|
| SCALE: 1"=100' | PREPARED BY: | | CITY OF CARLSBAD |
| JOB #: 2468 | PROJECT DESIGN CONSULTANTS<br>Planning \| Landscape Architecture \| Engineering \| Survey | 701 B Street, Suite 800<br>San Diego, CA 92101<br>619.236.6411 Tel<br>619.234.0349 Fax | QUARRY CREEK |
| CREATED: 9/12/11 | | | DRAINAGE MAP<br>PROPOSED CONDITIONS<br>EXHIBIT B |

I:\JOBS2\2468\REPORTS\DRAIN-TM\EXH\Prop-Cond-B.dwg 10/4/2012 3:28:31 PM