APPENDIX B
MUNICIPAL BMPs

United States Environmental Protection Agency
Office of Water Washington, D.C.
EPA 832-F-99-011 September 1999

EPA

Storm Water O&M Fact Sheet
Catch Basin Cleaning

DESCRIPTION

Catch basins are chambers or sumps, usually built at the curb line, which allow surface water runoff to enter the storm water conveyance system. Many catch basins have a low area below the invert of the outlet pipe intended to retain coarse sediment. By trapping sediment, the catch basin prevents solids from clogging the storm sewer and being washed into receiving waters. Catch basins must be cleaned periodically to maintain their ability to trap sediment, and consequently their ability to prevent flooding. The removal of sediment, decaying debris, and highly polluted water from catch basins has aesthetic and water quality benefits, including reducing foul odors, reducing suspended solids, and reducing the load of oxygen-demanding substances that reach receiving waters.

APPLICABILITY

Catch basin cleaning should be performed at any facility that has an on-site storm sewer system that includes catch basins and manholes.

Although catch basin cleaning is easily implemented, it is often overlooked in an overall storm water management plan. In addition, many of the catch basin cleaning programs that have been implemented focus only on removal of debris from grate openings; full implementation of the catch basin cleaning BMP should also include removal of debris from the catch basin itself.

ADVANTAGES AND DISADVANTAGES

Catch basin cleaning is an efficient and cost-effective method for preventing the transport of sediment and pollutants to receiving water bodies. This improves both the aesthetics and the quality of the receiving water body.

Limitations associated with cleaning catch basins include:

- Catch basin debris usually contains appreciable amounts of water and offensive organic material which must be properly disposed.
- Catch basins may be difficult to clean in areas with poor accessibility and in areas with traffic congestion and parking problems.
- Cleaning is difficult during the winter when snow and ice are present.

Sediment and debris removed from catch basins can potentially be classified as hazardous waste. As a result, the materials must be disposed in a proper manner to avoid negative environmental impacts.

PERFORMANCE

Based on current data, it is not possible to quantify the water quality benefits to receiving waters resulting from catch basin cleaning. The rate at which catch basins fill with debris, as well as the total amount of material which can be removed by different frequencies of cleaning, are highly variable and cannot be readily predicted. Past studies have estimated that typical catch basins retain up to 57 percent of coarse solids and 17 percent of equivalent biological oxygen demand (BOD).

In addition, data collected as part of a Nationwide Urban Runoff Program (NURP) project in Castro Valley Creek, California, indicated that catch basins, cleaned on an average of once every year and a half, contained approximately 60 pounds of material each at the time of the cleaning.

OPERATION AND MAINTENANCE

Catch basins should be inspected at least annually to determine if they need to be cleaned. Typically, a catch basin should be cleaned if the depth of deposits is greater than or equal to one-third the depth from the basin to the invert of the lowest pipe or opening into or out of the basin. If a catch basin significantly exceeds the one-third depth standard during the annual inspection, then it should be cleaned more frequently. If woody debris or trash accumulates in a catch basin, then it should be cleaned on at least a weekly basis.

Catch basins can be cleaned either manually or by specially designed equipment. This equipment may include bucket loaders and vacuum pumps. Material removed from catch basins is usually disposed in conventional landfills. Before any materials can be disposed, it is necessary to perform a detailed chemical analysis to determine if the materials meet the EPA criteria for hazardous waste. This will help determine how the materials should be stored, treated, and disposed.

COSTS

Catch basin cleaning costs will vary depending upon the method used, the required cleaning frequency, the amount of debris removed, and debris disposal costs.

Cleaning costs for catch basins were estimated in three NURP program studies (Midwest Research Institute, 1982). These estimates are summarized in Table 1.

In communities equipped with vacuum street sweepers, a cleaning cost of $8 per basin cleaned is recommended for budgetary purposes (Southeastern Wisconsin Regional Planning Commission, 1991.) Cleaning catch basins manually costs approximately twice as much as cleaning the basins with a vacuum attached to a sweeper. Therefore, a cost estimate of $16 per catch basin cleaned may be used for manual cleaning. It should be noted that costs vary depending on local market conditions.

TABLE 1 CLEANING COST PER CATCH BASIN

Location	Method	Cost
Castro Valley, CA	Vacuum attached to street sweeper	$7.70
Salt Lake County, UT	Vacuum attached to street sweeper	$10.30
Winston-Salem, NC	Vacuum attached to street sweeper	$6.30

Source: MRI, 1982.

REFERENCES

1. Midwest Research Institute, 1982. *Collection of Economic Data from Nationwide Urban Runoff Program Projects-Final Report.* Report to U.S. Environmental Protection Agency.

2. Minnesota Pollution Control Agency, 1989. *Protecting Water Quality in Urban Areas.*

3. Southeastern Wisconsin Regional Planning Commission, 1991. *Cost of Urban Nonpoint Source Water Pollution Control Measures,* Technical Report No. 31.

4. U.S. EPA, 1983. *Final Report of the Nationwide Urban Runoff Program.* EPA 841/583109.

5. U.S. EPA, 1977. *Catch Basin Technology Overview and Assessment.* EPA-600/2-77-051.

6. Washington State Department of Ecology, 1992. *Storm Water Management Manual for Puget Sound.*

ADDITIONAL INFORMATION

Alameda County, California
Jim Scanlin
Alameda Countywide Clean Water Program
951 Turner Court, Room 300
Hayward, CA 94545

King County, Washington
Dave Hancock
Department of Natural Resources, Water and Land Resources Division, Drainage Services Section
700 5th Avenue, Suite 2200
Seattle, WA 98104

Salt Lake County, Utah
Terry Way
Salt Lake County Engineering Division
2001 South State Street, Suite N3300
Salt Lake City, UT 84190

Southeastern Wisconsin Regional Planning Commission
Bob Biebel
916 N. East Avenue, P.O. Box 1607
Waukesha, WI 53187

City of Winston Salem, North Carolina
Terry Cornett
Department of Public Works, Streets Division
P.O. Box 2511
Winston Salem, NC 27106

The mention of trade names or commercial products does not constitute endorsement or recommendation for the use by the U.S. Environmental Protection Agency.

For more information contact:

Municipal Technology Branch
U.S. EPA
Mail Code 4204
401 M St., S.W.
Washington, D.C., 20460

OWM MTB
Excellence in compliance through optimal technical solutions
MUNICIPAL TECHNOLOGY BRANCH

United States Environmental Protection Agency
Office of Water Washington, D.C.
EPA 832–F-99-009 September 1999

Storm Water Management Fact Sheet
Coverings

DESCRIPTION

Covering is the partial or total enclosure of raw materials, byproducts, finished products, containers, equipment, process operations, and material storage areas that, when exposed to rain and/or runoff, could contaminate storm water. Tarpaulins, plastic sheeting, roofs, buildings, and other enclosures are examples of temporary or permanent coverings that are effective in preventing storm water contamination. The most prominent advantage of covering is that it is inexpensive in comparison to other BMPs.

APPLICABILITY

A review of numerous NPDES group applications indicates that covering is a commonly implemented BMP. As more facilities identify potential sources of storm water contamination, the use of coverings will increase significantly due to their effectiveness from a performance and cost perspective.

Covering is appropriate for loading/unloading areas, raw material, byproduct, and final product outdoor storage areas, fueling and vehicle maintenance areas, and other high risk areas.

ADVANTAGES AND DISADVANTAGES

Covering is a simple and effective storm water management BMP. Its advantages relative to other storm water management BMPs include its comparative ease of implementation, its potential low cost, and its widespread applicability.

Disadvantages associated with covering as a BMP include:

- Temporary covering methods, such as plastic sheeting, can become torn or ripped, exposing the contaminant to precipitation and/or storm water runoff.
- Costs may prohibit the building of complete enclosures.
- Health or safety problems may develop with enclosures built over certain materials or activities.
- Coverings require frequent inspection.
- A structure with only a roof may not keep out all precipitation.

The impact from a covered area depends on the degree of complexity in the covering design. Simple plastic sheeting can possibly create a storm water diversion, and allow for disposal of uncontaminated water to a storm sewer. An appropriate structure with a permanent roof may be less effective, if the material inside is not sufficiently protected from contact with runoff. An enclosed structure may need to have internal drainage. However, if the stored material is considered hazardous, it must not be connected to the storm sewer. Depending on the site's NPDES permit, connection to a sanitary sewer may also be unsuitable. The internal drains would then need to be connected to some suitable containment area for later pretreatment and disposal.

IMPLEMENTATION

When implementing a program to cover materials to reduce their exposure to runoff, one must first

choose the proper covering. When deciding on a covering, it is necessary to evaluate the integrity and durability of the covering, as well as its compatibility with the material or activity being covered.

Covering alone may not protect exposed materials from storm water contact. Placing material on an elevated impermeable surface or building curbing around the outside of the materials may be required to prevent contact with storm water runoff from adjacent areas. If the program calls for a material to be enclosed, the designer should consider materials access, handling, and transfer during the design of the enclosure. Materials that pose environmental and/or safety dangers because they are radioactive, pathogenic, flammable, explosive, or reactive, require special ventilation and temperature design considerations.

In addition to properly designing an enclosure or cover, practicing proper materials management within an enclosure or underneath a covered area is essential. For example, floor drainage within an enclosure should be properly designed and connected to a sanitary sewer. The local publicly owned treatment works should be consulted to determine if there are any pretreatment requirements, restrictions, or compatibility problems prior to discharge of the storm water.

Based on data currently available, it is difficult to quantify the mitigation of runoff contamination when covering is used. However, significant runoff water quality benefits are expected by simply reducing the contact between potential contaminants and precipitation or storm water runoff. One source has estimated that 80 percent of the environmental damage from de-icing chemicals is caused by inadequate storage facilities.

Inspecting coverings must be part of an overall preventive maintenance program. Maintenance involves frequent inspection of the covering for rips, holes, and general wear.

COSTS

Covering costs vary in proportion to the degree of protection desired, and the required life span. The most inexpensive covering is plastic sheeting, but it is not suitable where a high degree of protection is desired for a long period. An enclosed building is the most expensive type of covering when materials for the structure, lighting, and ventilation are considered, but it offers the highest degree of protection for the longest period.

REFERENCES

1. Minnesota Pollution Control Agency, 1989. *Protecting the Water Quality in Urban Areas.*

2. U.S. EPA, 1992. *Summary Guidance: Storm Water Management for Industrial Activities: Developing Pollution Prevention Plans and Best Management Practice.* EPA 833-R92-002, U.S. EPA, Washington, DC.

3. Washington State Department of Ecology, 1992. *Storm Water Management Manual for Puget Sound.*

ADDITIONAL INFORMATION

Center for Watershed Protection
Tom Schueler
8391 Main Street
Ellicott City, MD 21043

Northern Virginia Planning District Commission
David Bulova
7535 Little River Turnpike, Suite 100
Annandale, VA 22003

Oklahoma Department of Environmental Quality
Don Mooney
Water Quality Division, Storm Water Unit
P.O. Box 1677
Oklahoma City, OK 73101-1677

Southeastern Wisconsin Regional Planning Commission
Bob Biebel
916 N. East Avenue, P.O. Box 1607
Waukesha, WI 53187

United States Postal Service
Charles Vidich
6 Griffin Road North
Windsor, CT 06006-7030

The mention of trade names or commercial products does not constitute endorsement or recommendation for the use by the U.S. Environmental Protection Agency.

For more information contact:

Municipal Technology Branch
U.S. EPA
Mail Code 4204
401 M St., S.W.
Washington, D.C., 20460

OWM MTB
Excellence in compliance through optimal technical solutions
MUNICIPAL TECHNOLOGY BRANCH

United States Environmental Protection Agency
Office of Water Washington, D.C.
EPA 832-F-99-010 September 1999

Storm Water Management Fact Sheet
Employee Training

DESCRIPTION

In-house employee training programs are established to teach employees about storm water management, potential sources of contaminants, and Best Management Practices (BMPs). Employee training programs should instill all personnel with a thorough understanding of their Storm Water Pollution Prevention Plan (SWPPP), including BMPs, processes and materials they are working with, safety hazards, practices for preventing discharges, and procedures for responding quickly and properly to toxic and hazardous material incidents.

APPLICABILITY

Typically, most industrial facilities have employee training programs. Usually these address such areas as health and safety training and fire protection. Training on storm water management and BMPs can be incorporated into these programs.

Employees can be taught through 1) posters, employee meetings, courses, and bulletin boards about storm water management, potential contaminant sources, and prevention of contamination in surface water runoff, and 2) field training programs that show areas of potential storm water contamination and associated pollutants, followed by a discussion of site-specific BMPs by trained personnel.

ADVANTAGES AND DISADVANTAGES

Advantages of an employee training program are that the program can be a low-cost and easily implementable storm water management BMP. The program can be standardized and repeated as necessary, both to train new employees and to keep its objectives fresh in the minds of more senior employees. A training program is also flexible and can be adapted as a facility's storm water management needs change over time.

Obstacles to an employee training program include:

- Lack of commitment from senior management.
- Lack of employee motivation.
- Lack of incentive to become involved in BMP implementation.

KEY PROGRAM COMPONENTS

Specific design criteria for implementing an employee training program include:

- Ensuring strong commitment and periodic input from senior management.
- Communicating frequently to ensure adequate understanding of SWPPP goals and objectives.
- Utilizing experience from past spills to prevent future spills.
- Making employees aware of BMP monitoring and spill reporting procedures.
- Developing operating manuals and standard procedures.

- Implementing spill drills.

IMPLEMENTATION

An employee training program should be an on-going, yearly process. Meetings about SWPPPs should be held at least annually, possibly in conjunction with other training programs. Figure 1 illustrates a sample employee training worksheet. Worksheets such as these can be used to plan and track employee training programs. Program performance depends on employees' participation and on senior management's commitment to reducing point and nonpoint sources of pollution; therefore, performance will vary among facilities. To be effective these programs need senior management's support

COSTS

Costs for implementing an employee training program are highly variable. Most storm water training program costs will be directly related to labor and associated overhead costs. Trainers can reduce costs by using free educational materials available on the subject of storm water quality.

Figure 2 can be used to estimate the annual costs for an in-house training program. Table 1 provides an example of how this worksheet can be used to estimate annual costs.

REFERENCES

1. U.S. EPA, 1979. *NPDES BMP Guidance Document.*

2. U.S. EPA, Pre-print, 1992. *Stormwater Management for Industrial Activities: Developing Pollution Prevention Plans and Best Management Practices*. EPA 832-R-92-006.

ADDITIONAL INFORMATION

Center for Watershed Protection
Tom Schueler
8391 Main Street
Ellicott City, MD 21043

City of Coral Gables, Florida
Tim Clark
285 Aragon Avenue
Coral Gables, FL 33134

Hillsborough County, Florida
Jose Rodriguez
Hillsborough County Public Works
601 East Kennedy Boulevard
Tampa, FL 33601

King County, Washington
Dave Hancock
Department of Natural Resources, Water and Land Resources Division, Drainage Services Section
700 5th Avenue, Suite 2200
Seattle, WA 98104

Mitchell Training, Inc.
Barbara Mitchell
5414 SW 177th Street
Archer, FL 32618

Southeastern Wisconsin Regional Planning Commission
Bob Biebel
916 N. East Avenue, P.O. Box 1607
Waukesha, WI 53187

The mention of trade names or commercial products does not constitute endorsement or recommendation for the use by the U.S. Environmental Protection Agency.

EMPLOYEE TRAINING			Worksheet Completed by: _____ Title: _____ Date: _____
Instructions: Describe the employee training program for your facility below. The program should, at a minimum, address spill prevention and response, good housekeeping, and material management practices. Provide a schedule for the training program and list the employees who attend the training sessions.			
Training Topics	**Brief Description of Training Program/Materials (e.g., film, newsletter, course)**	**Schedule for Training (list dates)**	**Participants**
Spill Prevention and Response			
Good Housekeeping			
Material Management Practices			
Other Topics			

Source: U. S. EPA, 1992.

FIGURE 1 SAMPLE WORKSHEET FOR TRACKING EMPLOYEE TRAINING

TABLE 1 EXAMPLE OF ANNUAL EMPLOYEE TRAINING COSTS

Title	Number		Average Hourly Rate ($)		Overhead* Multiplier		Estimated Yearly Hours on SW Training		Estimated Annual Cost ($)
Stormwater Engineer	1	x	15	x	2.0	x	20	=	600
Plant Management	5	x	20	x	2.0	x	10	=	2,000
Plant Employees	100	x	10	x	2.0	x	5	=	10,000
							Total Estimated Annual Cost $12,600		

*Note: Defined as a multiplier (typically ranging between 1 and 3) that takes into account those costs associated with costs other than salary of employing a person, expenses, etc

Title	Number	Average Hourly Rate ($)	Overhead Multiplier	Estimated Yearly Hours on SW Training	Estimated Annual Cost ($)	
_____	_____	x _____	x _____	x _____	= _____	(A)
_____	_____	x _____	x _____	x _____	= _____	(B)
_____	_____	x _____	x _____	x _____	= _____	(C)
_____	_____	x _____	x _____	x _____	= _____	(D)
				Total Estimated Annual Cost (Sum of A+B+C+D)	_____	

Source: U.S. EPA, 1992.

FIGURE 2 SAMPLE ANNUAL TRAINING COST WORKSHEET

For more information contact:

Municipal Technology Branch
U.S. EPA
Mail Code 4204
401 M St., S.W.
Washington, D.C., 20460

OWM MTB
Excellence in compliance through optimal technical solutions
MUNICIPAL TECHNOLOGY BRANCH

United States Environmental Protection Agency
Office of Water Washington, D.C.
EPA 832-F-99-014 September 1999

Storm Water Technology Fact Sheet
Flow Diversion

DESCRIPTION

Flow diversion structures (such as gutters, drains, sewers, dikes, berms, swales, and graded pavement) are used to collect and divert runoff to prevent the contamination of storm water and receiving water. Flow diversion structures can be used in two ways. First, flow diversion structures may be used to channel storm water away from industrial areas so that it does not mix with on-site pollutants. Second, flow diversion may be used to carry contaminated runoff to a treatment facility.

One of the most common methods for diverting flow is through storm water conveyance systems. These systems can be constructed from many different materials, depending on the design criteria and specifications for the site. Common materials used for these systems include concrete, clay tiles, asphalt, plastics, metals, riprap, compacted soils, and vegetation. These conveyances can be temporary or permanent.

Flow diversion structures are often modified by incorporating them into other pollution control BMPs. For example, diverted flow can be fed into an infiltration drainfield system, an infiltration basin, a constructed wetland treatment facility, or an onsite treatment facility for discharge under the NPDES program.

Another common modification is to construct a temporary flow diversion to determine its effectiveness. If the diversion structure is proven effective, it may then be made permanent.

APPLICABILITY

Storm water flow diversion systems work well at most industrial sites. The systems can be used to direct storm water downslope, away from industrial areas, and into channels or drain systems. This has two advantages. First, if storm water is potentially contaminated, it can be directed to a treatment facility. Second, if the runoff has not been contaminated, it can be kept separate from runoff that has been in contact with contaminated areas.

A good example of the utilization of a diversion structure is the Isle La Plume Wastewater Treatment Plant in La Crosse, WI. The area immediately surrounding the facility has been regraded in order for the storm water runoff to be directed into the process tanks. Here, the runoff is treated along with other wastewater.

ADVANTAGES AND DISADVANTAGES

Some advantages of using storm water conveyance systems to divert flow include:

- Storm water flow is directed around industrial sites, preventing contamination of the storm water, and also preventing flooding of the site.
- System maintenance requirements are low.
- Such conveyances are erosion-resistant.
- System installation may not require extensive construction.

Potential disadvantages of flow diversion may include:

- Erosion problems due to concentrated flows.
- Potential groundwater contamination if conveyance channels have high infiltration capacities.
- Inadequately treated discharges to undersized water treatment facilities.
- Space limitations can make diversion structures impractical.
- Diversion structures my be too expensive for small facilities or for a site that has already been constructed.
- Maintenance is required after heavy rains.

DESIGN CRITERIA

Planning for flow diversion structures should incorporate data from the typical storm water flow. Also, the patterns of storm water drainage should be considered so that the channels may be located to divert and collect the flow efficiently. When deciding the type of material for the conveyance structure, planners should consider the material's resistance to erosion, its durability, and its compatibility with any pollutants it may carry.

Diversion systems are most easily installed during facility construction. The diversion system should be designed to incorporate the site's existing grades. This will reduce the BMP's design and construction costs. The site should be graded to allow for continued movement of runoff through the conveyance system. (Note: care must be exercised to limit flow velocities through the diversion system to reduce the possibility of erosion.) A typical diversion swale is shown in Figure 1.

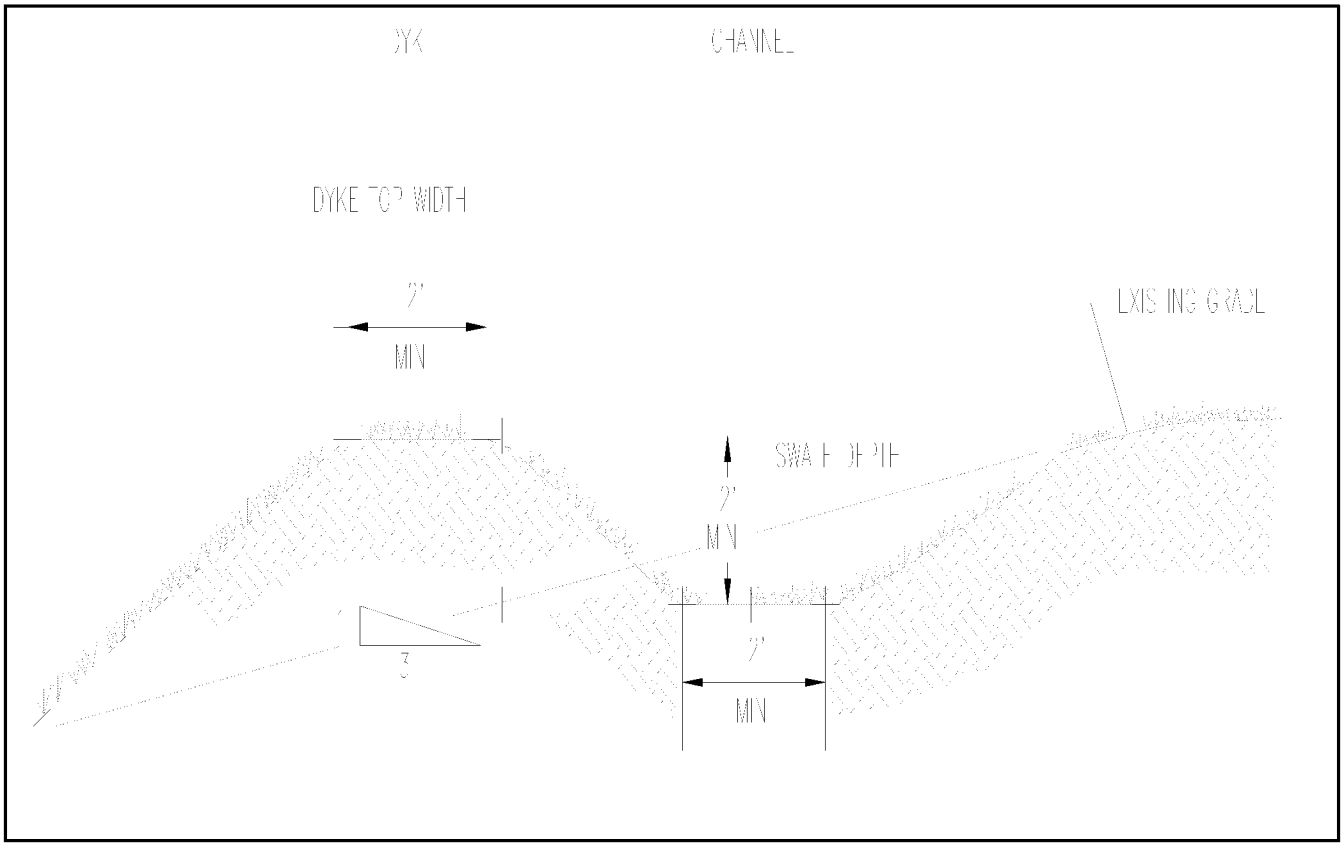

Source: SEWPRC, 1991.

FIGURE 1 TYPICAL DIVERSION SWALE DETAILS

PERFORMANCE

Properly designed storm water diversion systems are very effective for preventing storm water from being contaminated and for routing contaminated flows to a proper treatment facility. For example, at Denver International Airport (DIA), flow diversion techniques intercepts 80 percent of the glycol used in airplane deicing and prevents it from entering Barr Lake, the local receiving waterbody. At the La Crosse, WI, Wastewater Treatment Plant, approximately one-third of the facility's storm water runoff is diverted into the plant's treatment process.

OPERATION AND MAINTENANCE

A maintenance program should be established to ensure that the system functions properly. Storm water diversion systems should be inspected to remove debris within 24 hours after a significant rainfall event since heavy storms may clog or damage the system. Flow diversion structures should also be inspected annually to ensure that they meet their hydraulic design requirements. This will ensure peak performance.

DIA has been in operation since 1995 and a continuous maintenance program is being implemented. Some techniques include conveying deicer-contaminated runoff from passenger aircraft deicing pads to a Pond or the Spent Glycol Storage Tanks for subsequent recycling and offsite reuse, if the runoff is in sufficient concentration. The deicer-contaminated storm runoff from other areas is diverted to storage ponds for pumping to Metro Wastewater Reclamation District (Metro).

COSTS

Costs vary depending on the type of flow diversion structure used. For example, the Southeastern Wisconsin Regional Planning Commission reports that vegetated swale costs vary between $41.83 and $246.06 per linear meter ($12.75 and $75 per linear foot), depending upon swale depth and bottom width (SEWRPC, costs adjusted from original 1991 document based on 1998 personal communication). Costs for the Denver International Airport flow diversion system are in the low millions of dollars range, however exact capital cost information has not yet been released.

REFERENCES

1. Denver International Airport, 1999. *Aircraft Deicing Fluid Collection and Treatment*.

2. James M. Montgomery, Consulting Engineers, Inc., 1992. Site Visit Data.

3. Minnesota Pollution Control Agency, 1989. *Protecting Water Quality in Urban Areas*.

4. Southeastern Wisconsin Regional Planning Commission, 1991. *Costs of Urban Nonpoint Source Water Pollution Control Measures*, Technical Report No. 31.

5. U.S. EPA, 1981. *NPDES BMP Guidance Document*.

6. U.S. EPA, Pre-print, 1992. *Storm Water Management for Industrial Activities: Developing Pollution Prevention Plans and Best Management Practices*. EPA 832-R-92-006.

7. Washington State Department of Ecology, 1992. *Storm Water Management Manual for Puget Sound*.

ADDITIONAL INFORMATION

Center for Watershed Protection
Tom Schueler
8391 Main Street
Ellicott City, MD 21043

Denver International Airport
Bob Nixon, Senior Engineer
8500 Pena Boulevard
Denver, CO 80249

City of La Crosse, Wisconsin
Greg Paul
La Plume Wastewater Treatment Plant
905 Houska Park Drive
La Crosse, WI 54601

Northern Virginia Planning District Commission
David Bulova
7535 Little River Turnpike
Annandale, VA 22003

Southeastern Wisconsin Regional Planning Commission
Bob Biebel
916 North East Avenue
P.O. Box 1607
Waukesha, WI 53187-1607

The mention of trade names or commercial products does not constitute endorsement or recommendation for the use by the U.S. Environmental Protection Agency.

For more information contact:

Municipal Technology Branch
U.S. EPA
Mail Code 4204
401 M St., S.W.

OWM MTB
Excellence in compliance through optimal technical solutions
MUNICIPAL TECHNOLOGY BRANCH

United States Environmental Protection Agency
Office of Water Washington, D.C.
832-F-99-004 September 1999

Storm Water O&M Fact Sheet
Preventive Maintenance

DESCRIPTION

Preventive maintenance involves the regular inspection, testing, and replacement or repair of equipment and operational systems. As a storm water best management practice (BMP), preventive maintenance should be used to monitor systems built to control storm water. These systems should be inspected to uncover cracks, leaks, and other conditions that could cause breakdowns or failures of storm water mitigation structures and equipment, which, in turn, could result in discharges of chemicals to surface waters either by direct overland flow or through storm drainage systems. A preventive maintenance program can prevent breakdowns and failures through adjustment, repair, or replacement of equipment before a major breakdown or failure occurs.

Typically, a preventive maintenance program should include inspections of catch basins, storm water detention areas, and water quality treatment systems. Without adequate maintenance, sediment and debris can quickly clog storm drainage facilities and render them useless.

APPLICABILITY

Preventive maintenance procedures and activities are applicable to almost all industrial facilities. This concept should be a part of a general good housekeeping program designed to maintain a clean and orderly work environment. Often the most effective first step towards preventing storm water pollution from industrial sites is to improve the facility's preventive maintenance and general good housekeeping methods.

For many facilities, preventive maintenance to protect water quality is simply an extension of current plant preventive maintenance programs. Most plants already have preventive maintenance programs that provide some degree of environmental protection. Such programs could be expanded to include storm water considerations.

ADVANTAGES AND DISADVANTAGES

Preventive maintenance takes a proactive approach to storm water management and seeks to prevent problems before they occur. A preventive maintenance program can improve water quality by controlling pollutant discharges to surface water that would result from spills and leaks. Preventive maintenance programs can also save a facility money by reducing the likelihood of having a system breakdown and also by reducing the likelihood of funding costly cleanup projects. In addition, a preventive maintenance program can be an effective community relations tool.

The primary limitations of implementing a preventive maintenance program include:

- Cost.
- Availability of trained preventive maintenance staff technicians.
- Management direction and staff motivation in expanding the preventive maintenance program to include storm water considerations.

KEY PROGRAM COMPONENTS

Elements of a good preventive maintenance program should include the following:

- Identification of equipment or systems that may malfunction and cause spills or leaks, or may otherwise contaminate storm water runoff. Typical equipment to be inspected inspected includes pipes, pumps, storage tanks and bins, pressure vessels, pressure release valves, process and material handling equipment, and storm water management devices.

- Establishment of schedules and procedures for routine inspections.

- Periodic testing of plant equipment for structural soundness.

- Prompt repair or replacement of defective equipment found during inspection and testing.

- Maintenance of a supply of spare parts for equipment that needs frequent repairs.

- Use of an organized record-keeping system to schedule tests and document inspections.

- Commitment to ensure that records are complete and detailed, and that they record test results and follow-up actions. Preventive maintenance inspection records should be kept with other visual inspection records.

IMPLEMENTATION

The key to properly implementing and tracking a preventive maintenance program is through the continual updating of maintenance records. Update records immediately after performing preventive maintenance or repairing an item and review them annually to evaluate the overall effectiveness of the program. Then refine the preventive maintenance procedures as necessary.

No quantitative data on the effectiveness of preventive maintenance as a BMP is available. However, it is intuitively clear that an effective preventive maintenance program will result in improved storm water discharge quality.

COSTS

The major cost of implementing a preventive maintenance program on storm water quality is the staff time required to administer the program. Typically, this is a small incremental increase if a preventive maintenance program already exists at the facility.

REFERENCES

1. U.S. EPA, June, 1981. *NPDES Best Management Practice Guidance Document.*

2. U.S. EPA, Pre-print, July 1992. *Storm Water Management for Industrial Activities: Developing Pollution Prevention Plans and Best Management Practices.* EPA 832-R-92-006.

3. Washington State Department of Ecology, February 1992. *Storm Water Management Manual for Puget Sound.*

ADDITIONAL INFORMATION

Center for Watershed Protection
Tom Schueler
8391 Main Street
Ellicott City, MD 21043

Northern Virginia Planning District Commission
David Bulova
7535 Little River Turnpike, Suite 100
Annandale, VA 22003

Oklahoma Department of Environmental Quality
Don Mooney
Water Quality Division, Storm Water Unit
P.O. Box 1677
Oklahoma City, OK 73101-1677

Southeastern Wisconsin Regional Planning Commission
Bob Biebel
916 N. East Avenue, P.O. Box 1607
Waukesha, WI 53187

United States Postal Service
Charles Vidich
6 Griffin Road North
Windsor, CT 06006-7030

The mention of trade names or commercial products does not constitute endorsement or recommendation for the use by the U.S. Environmental Protection Agency.

For more information contact:

Municipal Technology Branch
U.S. EPA
Mail Code 4204
401 M St., S.W.
Washington, D.C., 20460

OWM MTB
Excellence in compliance through optimal technical solutions
MUNICIPAL TECHNOLOGY BRANCH

United States Environmental Protection Agency
Office of Water Washington, D.C.
EPA 832-F-99-071 September 1999

Storm Water Management Fact Sheet
Spill Prevention Planning

DESCRIPTION

Spill prevention is prudent both economically and environmentally, because spills increase operating costs and lower productivity. An important tool in preventing spills is a Spill Prevention Plan. A Spill Prevention Plan specifies materials handling procedures and storage requirements and identifies spill cleanup procedures for areas and processes in which spills may potentially occur. The plan standardizes process operating procedures and employee training in an effort to minimize accidental pollutant releases that could contaminate storm water runoff.

Spill prevention should be part of a comprehensive Best Management Practice program to prevent runoff contamination. This program should also include storm water contamination assessment, flow diversion, record keeping, internal reporting, employee training, and preventive maintenance.

Typically, most businesses and public agencies that generate hazardous waste and/or produce, transport, or store petroleum products are required by State and federal law to prepare spill control and cleanup plans. Therefore, a Spill Prevention and Response Plan may have already been developed as a result of other environmental regulatory requirements. Existing plans should be re-evaluated and revised to address storm water management issues.

APPLICABILITY

A Spill Prevention Plan is applicable to facilities that transport, transfer, and/or store hazardous materials, petroleum products, or fertilizers that can contaminate storm water runoff. An important part of an effective Spill Prevention Plan is establishing a method for quick notification of the appropriate emergency response teams in the event of a spill. In some plants, each area or process may have a separate team leader and/or response team. Figure 1 illustrates a sample spill prevention team roster that can help in quick identification of Spill Prevention team leaders and their responsibilities.

ADVANTAGES AND DISADVANTAGES

The advantages of an effective Spill Prevention Plan include reducing storm water contamination and maintaining the water quality of the receiving water. Spill Prevention Plans are often good ways of standardizing procedures and employee training to decrease the likelihood of spills.

Spill Prevention Planning can be limited by the following:

- Lack of employee motivation to implement the plan.
- Lack of commitment from senior management.
- Key individuals identified in the Spill Prevention Plan may not be properly trained in the areas of spill prevention, response, and cleanup.

KEY PROGRAM COMPONENTS

Before preparing a Spill Prevention Plan, a facility should do the following:

POLLUTION PREVENTION TEAM MEMBER ROSTER	Worksheet Completed by: _____ Title: _____ Date: _____

Leader: _____ Title: _____

Office Phone: _____

Responsibilities:

_____

_____

Members:

(1) _____ Title: _____

Office Phone: _____

Responsibilities:

_____

_____

(2) _____ Title: _____

Office Phone: _____

Responsibilities:

_____

_____

(3) _____ Title: _____

Office Phone: _____

Responsibilities:

_____

_____

Source: EPA, 1992.

FIGURE 1 SAMPLE SPILL PREVENTION TEAM ROSTER

- Conduct a materials inventory throughout the facility.
- Evaluate past spills and leaks.
- Identify non-storm water discharges and non-approved connections to storm water.
- Collect and evaluate storm water.
- Summarize the findings of this assessment.

Once these tasks have been accomplished, the facility should prepare its Spill Prevention Plan. The plan should include:

- A description of the facility, including the owner's name and address, the nature of the facility activity, and the general types of chemicals used in the facility.

- A site plan showing the locations of chemical storage areas, storm drains, tributary drainage areas with drainage arrows, all surface water bodies on or next to the site, and any devices to stop spills from leaving the site (i.e., collection basins). Spill prevention devices should also have a description written on the map. Table 1 contains a list of features that should be indicated on the site map.

- Notification procedures to be used in the event of a spill. These should include phone numbers of key personnel and appropriate regulatory agencies, such as local Pollution Control Agencies and the local Sewer Authority.

- Specific instructions regarding cleanup procedures.

- A single designated person who has overall responsibility for spill response. Key personnel should be trained in the use of this plan, and all employees should have basic knowledge of spill control procedures.

A summary of the plan should be written and posted at appropriate points in the building (i.e., meeting rooms, cafeteria, and areas with a high spill potential). The summary should identify the spill cleanup coordinators, location of cleanup kits, and phone numbers of regulatory agencies to be contacted in the event of a spill.

Implementing the Spill Prevention Plan should include the following:

- Spill cleanups should begin immediately. No emulsifier or dispersant should be used.

- In fueling areas, absorbent should be packaged in small bags for convenient use and small drums should be available for storage. Absorbent materials should not be washed down the floor drain or into the storm sewer.

- Emergency spill containment and cleanup kits should be located at the facility site. The contents of the kit should be appropriate to the type and quantities of chemical or goods stored at the facility.

Some structural methods to consider when developing a Spill Prevention Plan include:

- **Containment diking**--Containment dikes are temporary or permanent earth or concrete berms or retaining walls that are designed to hold spills. Diking can be used at any industrial facility, but is most common for controlling large spills or releases from liquid storage and transfer areas. Diking can provide one of the best protective measures against the contamination of storm water because it surrounds the area of concern and keeps spilled materials separated from the storm water outside of the diked area.

- **Curbing**--Similar to containment diking, a curb is a barrier that surrounds an area of concern. Unlike diking, curbing is unable to contain large spills and is usually implemented on a small-scale basis. However, curbing is common at many facilities and in small areas where liquids are handled and transferred.

Collection basins--Collection basins are permanent structures in which large spills or contaminated storm water is contained and stored before cleanup or treatment. Collection basins are designed to receive spills, leaks, etc., and to prevent pollutants from being released into the environment. Unlike containment dikes, collection basins can receive and contain materials from many locations across a facility.

TABLE 1 CRITERIA FOR DESIGNING A SITE MAP

DEVELOPING A SITE MAP	Worksheet Completed by: _____ Title: _____ Date: _____

Instructions: Draw a map of your site including a footprint of all buildings, structures, paved areas, and parking lots. The information below describes additional elements.

- All outfalls and storm water discharges
- Drainage areas of each storm water outfall
- Structural storm water pollution control measures, such as:
  - -Flow diversion structures
  - -Retention/detention ponds
  - -Vegetative swales
- Name of receiving waters (or if through a Municipal Separate Sewer System)
- Locations of past spills and leaks
- Locations of high-risk, waste-generating areas and activities common sites such as:
  - -Fueling stations
  - -Vehicle/equipment washing and maintenance areas
  - -Area for unloading/loading materials
  - -Above-ground tanks for liquid storage
  - -Industrial waste management areas (landfills, waste piles, treatment plants, disposal areas)
  - -Outside storage areas for raw materials, by-products, and finished products
  - -Outside manufacturing areas
  - -Other areas of concern (specify: _____)

Source: EPA, 1992.

In addition to preventing the release of the substance to surface waters, any spilled substances must be cleaned up and disposed to protect plant personnel from potential health and fire hazards. Methods of cleanup, recovery, treatment, or disposal include:

- Physical. Physical methods for the cleanup of dry chemicals include the use of brooms, shovels, sweepers, or plows.
- Mechanical. Mechanical methods include the use of vacuum cleaning systems and pumps.
- Chemical. Chemical cleanups of material can be achieved with the use of sorbents, gels, and foams. Sorbents are compounds that immobilize materials by surface absorption or adsorption in the sorbent bulk. Gelling agents interact with the spilled

chemical(s) by concentrating and congealing to form a rigid or viscous material more conducive to a mechanical cleanup. Foams are mixtures of air and aqueous solutions of proteins and surfactant-based foaming agents. The primary purpose of foams is to reduce the vapor concentration above the spill surface, thereby controlling the rate of evaporation.

IMPLEMENTATION

Past experience has shown that the biggest obstacle to an effective Spill Prevention Plan is its implementation. Qualitatively, implementation of a well prepared Spill Prevention Plan should significantly decrease contamination of storm water runoff.

A facility Spill Prevention Plan should be reviewed at least annually and following any spills to evaluate the Spill Prevention Plan's level of success and how it can be improved. The plan should also be reviewed when a new material is introduced to any of the facility's processes.

COSTS

If a facility already has a Spill Control and Cleanup Plan in place, modification to address storm water contamination concerns will require minimal cost. If a facility will be developing a Spill Prevention Plan for the first time, the initial cost will depend on the type of material at the facility, the facility size, and other related parameters. Costs for structural containment devices will also need to be identified for each facility.

REFERENCES

1. U.S. EPA, 1992. *Storm Water Management for Industrial Activities: Developing Pollution Prevention Plans and Best Management Practices*. EPA 832-R-92-006.

2. Washington State Department of Ecology, 1992. *Storm Water Management Manual for Puget Sound.*

ADDITIONAL INFORMATION

Blymeyer Engineers, Inc.
Danielle Ormsty
1829 Clement Avenue
Alameda, CA 94501

EMPE, Inc.
Bill Basham
220 Athens Way
Plaza I, Suite 410
Nashville, TN 37228

Environmental Management and Training, LLC.
Normand Wei
7284 Vista Bonita Drive
Las Vegas, NV 89129

City of Fort Lauderdale
Jeff Halsey
218 SW 1st Avenue
Fort Lauderdale, FL 33301

State of Illinois
Jorge Patino, Storm Water Engineer
1021 North Grand Avenue East
P.O. Box 19276
Springfield, IL 62702

United States Postal Service
Charles Vidich
6 Griffin Road North
Windsor, CT 06006-7030

The mention of trade names or commercial products does not constitute endorsement or recommendation for the use by the U.S. Environmental Protection Agency.

For more information contact:

Municipal Technology Branch
U.S. EPA
Mail Code 4204
401 M St., S.W.

OWM MTB
Excellence in compliance through optimal technical solutions
MUNICIPAL TECHNOLOGY BRANCH

United States Environmental Protection Agency
Office of Water Washington, D.C.
832-F-99-046 September 1999

Storm Water Management Fact Sheet
Visual Inspection

DESCRIPTION

Visual inspection is a Best Management Practice (BMP) in which members of a Storm Water Pollution Prevention Team visually examine material storage and outdoor processing areas, the storm water discharges from such areas, and the environment in the vicinity of the discharges, to identify contaminated runoff and its possible sources.

In a visual inspection, storm water runoff may be examined for the presence of floating and suspended materials, oil and grease, discoloration, turbidity, odor, or foam; and storage areas may be inspected for leaks from containers, discolorations on the storage area floor, or other indications of a potential for pollutants to contaminate storm water runoff.

Visual inspections may indicate the need to modify a facility to reduce the risk of contaminating runoff.

APPLICABILITY

The U.S. EPA has recognized visual inspection as a baseline BMP for over 10 years. Its implementation, however, has been sporadic. Implementation may increase as more facilities develop Storm Water Pollution Prevention Plans. Implementation may also increase as facility management recognizes visual inspection to be effective both in protecting water quality and in reducing costs.

ADVANTAGES AND DISADVANTAGES

Visual inspections are an effective way to identify a variety of problems. Correcting these problems can improve the water quality of the receiving water.

Limitations associated with visual inspections include the following:

- Visual inspections are effective only for those areas clearly visible to the human eye.
- The inspections need to be performed by qualified personnel.
- To be effective, inspections must be carried out routinely. This requires a corporate commitment to implementing them.
- Inspectors need to be properly motivated to perform a thorough visual inspection.

KEY PROGRAM COMPONENTS

Visual inspections for signs of storm water contamination should be performed routinely. Flows should be observed during dry periods to determine the presence of any stains, sludge, odors, and other abnormal conditions.

Visual inspections should also be made at all storm water discharge outlet locations during the first hour of a storm event, once runoff has reached its maximum flow rate. Inspectors should examine the discharge for the presence of floating and suspended materials, oil and grease, discoloration, turbidity, foam, or odor.

Inspection frequency interval may be determined by the storm water discharge permit, by storm frequency, or by the potential risk from the site. Inspections should be made at least once a month in areas with frequent storms; inspections may be less frequent where storms are less frequent. Finally, inspection frequency may be based in part on the history of previous spills and leaks. Experienced personnel should evaluate the causes of previous accidents, assess the risks for future accidents, and determine an inspection schedule based on these risks.

Proper records of inspection results must be kept. The record for each inspection should include the date of the inspection, the names of the personnel who performed the inspection, and their observations.

Visual inspections of a facility should focus on the following key areas:

- Storage facilities.
- Transfer pipelines.
- Loading and unloading areas.
- Pipes, pumps, valves, and fittings.
- Tanks (including internal and external inspection of the tank for corrosion and inspection of its support or foundation for deterioration).
- Primary or secondary containment facilities.
- Shipping containers.

In addition, a visual inspection should include assessing the integrity of the storm water collection system; checking for leaks, seepage, and overflows from sludge and waste disposal sites; and ensuring that dry chemicals and dust from industrial areas is not exposed to wind or other elements that may move them into the runoff.

IMPLEMENTATION

A visual inspection BMP program should be incorporated into every storm water discharger's record keeping and internal reporting structure.

Outfall flow rates and the presence of oil sheens, floatables, coarse solids, color, and odors will probably be the most useful indicators of potential problems. Specific parameters to look for in completing a visual inspection include the following:

- Odor: Discharge odors can vary widely. Some may indicate the source of contamination. Industrial discharges may smell like a particular spoiled product, oil, gasoline, a specific chemical, or a solvent. For example, the decomposition of organic wastes in a discharge will release sulfide compounds, creating an intense smell of rotten eggs. Significant sanitary wastewater contributions will also cause pronounced and distinctive odors.

- Color: Color may indicate inappropriate discharges, especially from industrial sources. Industrial discharges may be any color. Dark colors, such as brown, gray, or black, are most common. For instance, flow contaminated by meat processing industries is usually a deep reddish-brown. Paper mill wastes (plating-mill wastes) are often yellow. Wash water from cement and stone working plants can cause cloudy discharges. Contamination from industrial areas may come from process waters (slug or continuous discharges); from equipment and work area wash water discharged to floor drains; or from spills washed into storm drains.

- Turbidity: Turbidity is often affected by the degree of gross contamination. Industrial flows can be cloudy (moderately turbid) or opaque (highly turbid). Undiluted industrial discharges, such as those coming from continual flow sources or intermittent spills, are often highly turbid. Sanitary wastewater is also often cloudy in nature.

- Floatable matter: A contaminated flow may also contain floatable solids or liquids. Identifying floatables can aid in finding the source of the contamination, because these substances are usually direct products or byproducts of the manufacturing process or the sanitary system. Examples of floatables of industrial origin are animal fats, spoiled food products, oils, plant parts, solvents, sawdust, foams, packing materials, and fuel.

- Deposits and Stains: Deposits and stains (residues) are any type of coating that remains after a non-storm water discharge has ceased. Deposits or stains usually are of a dark color and usually cover the area surrounding the storm water discharge. They often contain fragments of floatable substances, and, at times, take the form of a crystalline or amorphous powder. For example, contamination from leather tanneries often produces grayish-black deposits containing fragments of animal flesh and hair. Another characteristic example is the coating of white crystalline powder formed on sewer outfalls by nitrogenous fertilizer wastes.

- Vegetation: Storm water discharges often affect surrounding vegetation. Industrial pollutants often cause a substantial alteration in the chemical composition and pH of the discharge water, which can affect plant growth even when the source of contamination is intermittent. For example, nutrients from various food product wastes increase plant growth. In contrast, the discharge of chemical dyes and inorganic pigments from textile mills may decrease vegetation, as these discharges are often very acidic. In either case, even when the pollution source is gone, the vegetation surrounding the discharge will continue to show the effects of the contamination.

  In order to accurately judge if the vegetation surrounding a discharge is normal, the observer must take into account recent weather conditions, as well as the time of year. Increased or inhibited plant growth near storm water discharges, as well as dead and decaying plants, is often a sign of pollution. However, it is important to distinguish whether plant damage is caused by contamination or by the physical effects of increased flows, such as scour. This can be done by chemically analyzing the flow or by confirming its source through additional visual inspections.

- Structural Damage: Structural damage is also a sign of industrial discharge contamination. Cracked or deteriorated concrete or peeling surface paint at an outfall usually indicates the presence of severely contaminated discharges. Contaminants causing this type of damage are usually very acidic or basic and are usually of industrial origin. For instance, discharges from primary metal industries may cause structural damage because their batch dumps are highly acidic.

The effectiveness visual inspections in reducing storm water runoff contamination is highly variable and dependent upon site-specific parameters. These factors include inspectors' motivation level, the types of industrial activity occurring at the facility, and the facility's maintenance procedures. Because familiarity with facility operations is essential in performing effective visual inspections, the inspections should be assigned to qualified staff such as maintenance personnel or environmental engineers. Figure 1 provides a sample visual evaluation worksheet that can be used to record the results of the inspections.

COSTS

Costs for performing the visual inspection BMP are minimal and consist of direct labor and overhead costs for staff hours spent on training, planning inspections, inspecting, and completing follow up activities. Annual costs can be estimated using the example in Table 1. Figure 2 can be used as a worksheet to calculate the estimated annual cost for implementing a visual inspection program.

Outfall # _____ Photograph # _____ Date: _____

Location: _____

Weather: air temp.: _____^{0}C rain: Y N sunny cloudy

Outfall flow rate estimate:_____L/sec

Known industrial or commercial uses in drainage area? Y N

Describe: _____

PHYSICAL OBSERVATIONS

Odor: none sewage sulfide oil gas rancid-sour other: _____

Color: none yellow brown green gray other: _____

Turbidity: none cloudy opaque

Floatables: none petroleum sheen sewage other: _____ (collect sample)

Deposits/stains: none sediment oily describe: _____ (collect sample)

Vegetation conditions: normal excessive growth inhibited growth

extent: _____

Damage to outfall structures:

identify structure: _____

damage: none / concrete cracking / concrete spalling / peeling paint / corrosion

other damage: _____

extent: _____

Source: Pitt, et. al, 1992.

FIGURE 1 VISUAL INSPECTION WORKSHEET

REFERENCES

1. California Environmental Protection Agency, 1992. Staff Proposal for Modification to Water Quality Order No. 91-13 DWQ Waste Discharge Requirements for Dischargers of Storm Water Associated with Industrial Activities, Draft Wording, Monitoring Program and Reporting Requirements.

2. Pitt R., D. Barbe, D. Adrian, and R. Field, 1992. *Investigation of Inappropriate Pollutant Entries into Storm Drainage Systems-A Users Guide*. U.S. EPA, Edison, NJ.

3. U.S. EPA, 1981. *NPDES BMP Guidance Document*.

4. U.S. EPA. Pre-print, 1992. *Storm Water Management for Industrial Activities: Developing Pollution Prevention Plans and Best Management Practices*. EPA 832-R-92-006.

ADDITIONAL INFORMATION

Center for Watershed Protection
Tom Schueler
8391 Main Street
Ellicott City, MD 21043

TABLE 1 EXAMPLE OF VISUAL INSPECTION PROGRAM COSTS

Title	Quantity		Average Hourly Rate ($)		Overhead* Multiplier		Estimated Yearly Hours on SW Training		Estimated Annual Cost ($)
Storm Water Engineer	1	x	15	x	2.0	x	20	=	600
Plant Management	5	x	20	x	2.0	x	10	=	2,000
Plant Employees	100	x	10	x	2.0	x	5	=	10,000
					TOTAL ESTIMATED ANNUAL COST				**$12,600**

*Note: Defined as a multiplier (typically ranging between 1 and 3) that takes into account those costs associated with payroll expenses, building expenses, etc.

Source: U.S. EPA, 1992.

Title	Quantity		Average Hourly Rate ($)		Overhead Multiplier		Estimated Yearly Hours on SW Training		Estimated Annual Cost($)
_____	_____	x	_____	x	_____	x	_____	=	_____ (A)
_____	_____	x	_____	x	_____	x	_____	=	_____ (B)
_____	_____	x	_____	x	_____	x	_____	=	_____ (C)
_____	_____	x	_____	x	_____	x	_____	=	_____ (D)

Source: U.S. EPA, 1992.

FIGURE 2 SAMPLE INSPECTION PROGRAM COST WORKSHEET

Northern Virginia Planning District Commission
David Bulova
7535 Little River Turnpike, Suite 100
Annandale, VA 22003

Oklahoma Department of Environmental Quality
Don Mooney
Water Quality Division, Storm Water Unit
P.O. Box 1677
Oklahoma City, OK 73101-1677

Southeastern Wisconsin Regional Planning Commission
Bob Biebel
916 N. East Avenue, P.O. Box 1607
Waukesha, WI 53187

United States Postal Service
Charles Vidich
6 Griffin Road North
Windsor, CT 06006-7030

The mention of trade names or commercial products does not constitute endorsement or recommendation for the use by the U.S. Environmental Protection Agency.

For more information contact:

Municipal Technology Branch
U.S. EPA
Mail Code 4204
401 M St., S.W.
Washington, D.C., 20460

OW/M MTB
Excellence in compliance through optimal technical solutions
MUNICIPAL TECHNOLOGY BRANCH

Grassed Swales

Postconstruction Storm Water Management in New Development and Redevelopment

Description

Grassed swales can be used along roadsides and parking lots to collect and treat storm water runoff

The term swale (a.k.a. grassed channel, dry swale, wet swale, biofilter) refers to a series of vegetated, open channel management practices designed specifically to treat and attenuate storm water runoff for a specified water quality volume. As storm water runoff flows through these channels, it is treated through filtering by the vegetation in the channel, filtering through a subsoil matrix, and/or infiltration into the underlying soils. Variations of the grassed swale include the grassed channel, dry swale, and wet swale. The specific design features and methods of treatment differ in each of these designs, but all are improvements on the traditional drainage ditch. These designs incorporate modified geometry and other features for use of the swale as a treatment and conveyance practice.

Applicability

Grassed swales can be applied in most situations with some restrictions. Swales are very well suited for treating highway or residential road runoff because they are linear practices.

Regional Applicability

Grassed swales can be applied in most regions of the country. In arid and semi-arid climates, however, the value of these practices needs to be weighed against the water needed to irrigate them.

Ultra-Urban Areas

Ultra-urban areas are densely developed urban areas in which little pervious surface exists. Grassed swales are generally not well suited to ultra-urban areas because they require a relatively large area of pervious surfaces.

Storm Water Hot Spots

Storm water hot spots are areas where land use or activities generate highly contaminated runoff, with concentrations of pollutants in excess of those typically found in storm water. A typical example is a gas station or convenience store. With the exception of the dry swale design (see Design Variations), hot spot runoff should not be directed toward grassed channels. These

practices either infiltrate storm water or intersect the ground water, making use of the practices for hot spot runoff a threat to ground water quality.

Storm Water Retrofit

A storm water retrofit is a storm water management practice (usually structural) put into place after development has occurred, to improve water quality, protect downstream channels, reduce flooding, or meet other specific objectives. One retrofit opportunity using grassed swales modifies existing drainage ditches. Ditches have traditionally been designed only to convey storm water away from roads. In some cases, it may be possible to incorporate features to enhance pollutant removal or infiltration such as check dams (i.e., small dams along the ditch that trap sediment, slow runoff, and reduce the longitudinal slope). Since grassed swales cannot treat a large area, using this practice to retrofit an entire watershed would be expensive because of the number of practices needed to manage runoff from a significant amount of the watershed's land area.

Cold Water (Trout) Streams

Grassed channels are a good treatment option within watersheds that drain to cold water streams. These practices do not pond water for a long period of time and often induce infiltration. As a result, standing water will not typically be subjected to warming by the sun in these practices.

Siting and Design Considerations

In addition to the broad applicability concerns described above, designers need to consider conditions at the site level. In addition, they need to incorporate design features to improve the longevity and performance of the practice, while minimizing the maintenance burden.

Siting Considerations

In addition to considering the restrictions and adaptations of grassed swales to different regions and land uses, designers need to ensure that this management practice is feasible at the site in question because some site conditions (i.e., steep slopes, highly impermeable soils) might restrict the effectiveness of grassed channels.

Drainage Area

Grassed swales should generally treat small drainage areas of less than 5 acres. If the practices are used to treat larger areas, the flows and volumes through the swale become too large to design the practice to treat storm water runoff through infiltration and filtering.

Slope

Grassed swales should be used on sites with relatively flat slopes of less than 4 percent slope; 1 to 2 percent slope is recommended. Runoff velocities within the channel become too high on steeper slopes. This can cause erosion and does not allow for infiltration or filtering in the swale.

Soils / Topography

Grassed swales can be used on most soils, with some restrictions on the most impermeable soils. In the dry swale (see Design Variations) a fabricated soil bed replaces on-site soils in order to ensure that runoff is filtered as it travels through the soils of the swale.

Ground Water

The depth to ground water depends on the type of swale used. In the dry swale and grassed channel options, designers should separate the bottom of the swale from the ground water by at least 2 ft to prevent a moist swale bottom, or contamination of the ground water. In the wet swale option, treatment is enhanced by a wet pool in the practice, which is maintained by intersecting the ground water.

Design Considerations

Although there are different design variations of the grassed swale (see Design Variations), there are some design considerations common to all three. One overriding similarity is the cross-sectional geometry of all three options. Swales should generally have a trapezoidal or parabolic cross section with relatively flat side slopes (flatter than 3:1). Designing the channel with flat side slopes maximizes the wetted perimeter. The wetted perimeter is the length along the edge of the swale cross section where runoff flowing through the swale is in contact with the vegetated sides and bottom of the swale. Increasing the wetted perimeter slows runoff velocities and provides more contact with vegetation to encourage filtering and infiltration. Another advantage to flat side slopes is that runoff entering the grassed swale from the side receives some pretreatment along the side slope. The flat bottom of all three should be between 2–8 ft wide. The minimum width ensures a minimum filtering surface for water quality treatment, and the maximum width prevents braiding, the formation of small channels within the swale bottom.

Another similarity among all three designs is the type of pretreatment needed. In all three design options, a small forebay should be used at the front of the swale to trap incoming sediments. A pea gravel diaphragm, a small trench filled with river run gravel, should be used as pretreatment for runoff entering the sides of the swale.

Two other features designed to enhance the treatment ability of grassed swales are a flat longitudinal slope (generally between 1 percent and 2 percent) and a dense vegetative cover in the channel. The flat slope helps to reduce the velocity of flow in the channel. The dense vegetation also helps reduce velocities, protect the channel from erosion, and act as a filter to treat storm water runoff. During construction, it is important to stabilize the channel before the turf has been established, either with a temporary grass cover or with the use of natural or synthetic erosion control products.

In addition to treating runoff for water quality, grassed swales need to convey larger storms safely. Typical designs allow the runoff from the 2-year storm (i.e., the storm that occurs, on average, once every two years) to flow through the swale without causing erosion. Swales should also have the capacity to pass larger storms (typically a 10-year storm) safely.

Design Variations

The following discussion identifies three different variations of open channel practices, including the grassed channel, the dry swale, and the wet swale.

Grassed Channel

Of the three grassed swale designs, grassed channels are the most similar to a conventional drainage ditch, with the major differences being flatter side slopes and longitudinal slopes, and a slower design velocity for water quality treatment of small storm events. Of all of the grassed

swale options, grassed channels are the least expensive but also provide the least reliable pollutant removal. The best application of a grassed channel is as pretreatment to other structural storm water practices.

One major difference between the grassed channel and most of the other structural practices is the method used to size the practice. Most storm water management water quality practices are sized by volume. This method sets the volume available in the practice equal to the water quality volume, or the volume of water to be treated in the practice. The grassed channel, on the other hand, is a flow-rate-based design. Based on the peak flow from the water quality storm (this varies from region to region, but a typical value is the 1-inch storm), the channel should be designed so that runoff takes, on average, 10 minutes to flow from the top to the bottom of the channel. A procedure for this design can be found in *Design of Storm Water Filtering Systems* (CWP, 1996).

Dry Swales

Dry swales are similar in design to bioretention areas (see Bioretention fact sheet). These designs incorporate a fabricated soil bed into their design. The existing soil is replaced with a sand/soil mix that meets minimum permeability requirements. An underdrain system is used under the soil bed. This system is a gravel layer that encases a perforated pipe. Storm water treated in the soil bed flows through the bottom into the underdrain, which conveys this treated storm water to the storm drain system. Dry swales are a relatively new design, but studies of swales with a native soil similar to the man-made soil bed of dry swales suggest high pollutant removal.

Wet Swales

Wet swales intersect the ground water and behave almost like a linear wetland cell (see Storm Water Wetland fact sheet). This design variation incorporates a shallow permanent pool and wetland vegetation to provide storm water treatment. This design also has potentially high pollutant removal. One disadvantage to the wet swale is that it cannot be used in residential or commercial settings because the shallow standing water in the swale is often viewed as a potential nuisance by homeowners and also breeds mosquitos.

Regional Variations

Cold Climates

In cold or snowy climates, swales may serve a dual purpose by acting as both a snow storage/treatment and a storm water management practice. This dual purpose is particularly relevant when swales are used to treat road runoff. If used for this purpose, swales should incorporate salt-tolerant vegetation, such as creeping bentgrass.

Arid Climates

In arid or semi-arid climates, swales should be designed with drought-tolerant vegetation, such as buffalo grass. As pointed out in the Applicability section, the value of vegetated practices for water quality needs to be weighed against the cost of water needed to maintain them in arid and semi-arid regions.

Limitations

Grassed swales have some limitations, including the following:

- Grassed swales cannot treat a very large drainage area.
- Wet swales may become a nuisance due to mosquito breeding.
- If designed improperly (e.g., if proper slope is not achieved), grassed channels will have very little pollutant removal.
- A thick vegetative cover is needed for these practices to function properly.

Maintenance Considerations

Maintenance of grassed swales mostly involves maintenance of the grass or wetland plant cover. Typical maintenance activities are included in Table 1.

Table 1. Typical maintenance activities for grassed swales (Source: Adapted from CWP, 1996)

Activity	Schedule
• Inspect pea gravel diaphragm for clogging and correct the problem. • Inspect grass along side slopes for erosion and formation of rills or gullies and correct. • Remove trash and debris accumulated in the inflow forebay. • Inspect and correct erosion problems in the sand/soil bed of dry swales. • Based on inspection, plant an alternative grass species if the original grass cover has not been successfully established. • Replant wetland species (for wet swale) if not sufficiently established.	Annual (semi-annual the first year)
• Rototill or cultivate the surface of the sand/soil bed of dry swales if the swale does not draw down within 48 hours. • Remove sediment build-up within the bottom of the swale once it has accumulated to 25 percent of the original design volume.	As needed (infrequent)
• Mow grass to maintain a height of 3–4 inches	As needed (frequent seasonally)

Effectiveness

Structural storm water management practices can be used to achieve four broad resource protection goals. These include flood control, channel protection, ground water recharge, and pollutant removal. Grassed swales can be used to meet ground water recharge and pollutant removal goals.

Ground Water Recharge

Grassed channels and dry swales can provide some ground water recharge as infiltration is achieved within the practice. Wet swales, however, generally do not contribute to ground water recharge. Infiltration is impeded by the accumulation of debris on the bottom of the swale.

Pollutant Removal

Few studies are available regarding the effectiveness of grassed channels. In fact, only 9 studies have been conducted on all grassed channels designed for water quality (Table 2). The data suggest relatively high removal rates for some pollutants, but negative removals for some bacteria, and fair performance for phosphorous. One study of available performance data (Schueler, 1997) estimates the removal rates for grassed channels as:

Total Suspended Solids: 81%

Total Phosphorous: 29%

Nitrate Nitrogen: 38%

Metals: 14% to 55%

Bacteria: -50%

Table 2. Grassed swale pollutant removal efficiency data

Removal Efficiencies (% Removal)							
Study	**TSS**	**TP**	**TN**	**NO_3**	**Metals**	**Bacteria**	**Type**
Goldberg 1993	67.8	4.5	-	31.4	42–62	-100	grassed channel
Seattle Metro and Washington Department of Ecology 1992	60	45	-	-25	2–16	-25	grassed channel
Seattle Metro and Washington Department of Ecology, 1992	83	29	-	-25	46–73	-25	grassed channel
Wang et al., 1981	80	-	-	-	70–80	-	dry swale
Dorman et al., 1989	98	18	-	45	37–81	-	dry swale
Harper, 1988	87	83	84	80	88–90	-	dry swale
Kercher et al., 1983	99	99	99	99	99	-	dry swale
Harper, 1988.	81	17	40	52	37–69	-	wet swale
Koon, 1995	67	39	-	9	-35 to 6	-	wet swale
Occoquan Watershed Monitoring Lab, 1983	-100	100	100	-	-100	-	drainage channel

Table 2. (continued)

Removal Efficiencies (% Removal)							
Study	**TSS**	**TP**	**TN**	**NO_3**	**Metals**	**Bacteria**	**Type**
Yousef et al., 1985	-	8	13	11	14–29	-	drainage channel
Occoquan Watershed Monitoring Lab, 1983	-50	-9.1	18.2	-	-100	-	drainage channel
Yousef et al., 1985	-	19.5	8	2	41–90	-	drainage channel
Occoquan Watershed Monitoring Lab, 1983	31	-23	36.5	-	-100 to 33	-	drainage channel
Welborn and Veenhuis, 1987	0	-25	-25	-25	0	-	drainage channel
Yu et al., 1993	68	60	-	-	74	-	drainage channel
Dorman et al., 1989	65	41	-	11	14-55	-	drainage channel
Pitt and McLean, 1986	0	-	0	-	0	0	drainage channel
Oakland, 1983	33	-25	-	-	20–58	0	drainage channel
Dorman et al., 1989	-85	12	-	-100	14–88	-	drainage channel

While it is difficult to distinguish between different designs based on the small amount of available data, grassed channels generally have poorer removal rates than wet and dry swales, although wet swales appear to export soluble phosphorous (Harper, 1988; Koon, 1995). It is not clear why swales export bacteria. One explanation is that bacteria thrive in the warm swale soils. Another is that studies have not accounted for some sources of bacteria, such as local residents walking dogs within the grassed swale area.

Cost Considerations

Little data are available to estimate the difference in cost between various swale designs. One study (SWRPC, 1991) estimated the construction cost of grassed channels at approximately \$0.25 per ft^2. This price does not include design costs or contingencies. Brown and Schueler (1997) estimate these costs at approximately 32 percent of construction costs for most storm water management practices. For swales, however, these costs would probably be significantly higher since the construction costs are so low compared with other practices. A more realistic estimate would be a total cost of approximately \$0.50 per ft^2, which compares favorably with other storm water management practices.

References

Center for Watershed Protection (CWP). 1996. *Design of Stormwater Filtering Systems.* Prepared for the Chesapeake Research Consortium, Solomons, MD, and USEPA Region V, Chicago, IL, by the Center for Watershed Protection, Ellicott City, MD.

Brown, W., and T. Schueler. 1997. *The Economics of Stormwater BMPs in the Mid-Atlantic Region.* Prepared for the Chesapeake Research Consortium, Edgewater, MD, by the Center for Watershed Protection, Ellicott City, MD.

Dorman, M.E., J. Hartigan, R.F. Steg, and T. Quasebarth. 1989. *Retention, Detention and Overland Flow for Pollutant Removal From Highway Stormwater Runoff. Vol. 1.* FHWA/RD 89/202. Federal Highway Administration, Washington, DC.

Goldberg. 1993. *Dayton Avenue Swale Biofiltration Study.* Seattle Engineering Department, Seattle, WA.

Harper, H. 1988. *Effects of Stormwater Management Systems on Groundwater Quality.* Prepared for Florida Department of Environmental Regulation, Tallahassee, FL, by Environmental Research and Design, Inc., Orlando, FL.

Kercher, W.C., J.C. Landon, and R. Massarelli. 1983. Grassy swales prove cost-effective for water pollution control. *Public Works*, 16: 53–55.

Koon, J. 1995. *Evaluation of Water Quality Ponds and Swales in the Issaquah/East Lake Sammamish Basins.* King County Surface Water Management, Seattle, WA, and Washington Department of Ecology, Olympia, WA.

Oakland, P.H. 1983. An evaluation of stormwater pollutant removal through grassed swale treatment. In *Proceedings of the International Symposium of Urban Hydrology, Hydraulics and Sediment Control, Lexington, KY.* pp. 173–182.

Occoquan Watershed Monitoring Laboratory. 1983. *Final Report: Metropolitan Washington Urban Runoff Project.* Prepared for the Metropolitan Washington Council of Governments, Washington, DC, by the Occoquan Watershed Monitoring Laboratory, Manassas, VA.

Pitt, R., and J. McLean. 1986. *Toronto Area Watershed Management Strategy Study: Humber River Pilot Watershed Project.* Ontario Ministry of Environment, Toronto, ON.

Schueler, T. 1997. Comparative Pollutant Removal Capability of Urban BMPs: A reanalysis. *Watershed Protection Techniques* 2(2):379–383.

Seattle Metro and Washington Department of Ecology. 1992. *Biofiltration Swale Performance: Recommendations and Design Considerations.* Publication No. 657. Water Pollution Control Department, Seattle, WA.

Southeastern Wisconsin Regional Planning Commission (SWRPC). 1991. *Costs of Urban Nonpoint Source Water Pollution Control Measures.* Technical report no. 31. Southeastern Wisconsin Regional Planning Commission, Waukesha, WI.

Manufactured Products for Storm Water Inlets

Postconstruction Storm Water Management in New Development and Redevelopment

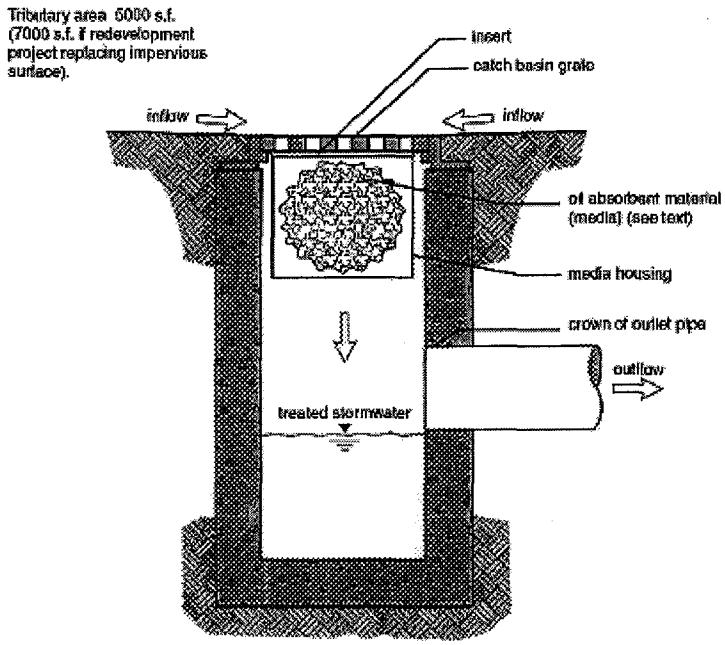

The typical design of a catch basin insert is a set of filters that are specifically chosen to address the pollutants expected at that site (Source: King County, Washington, 2000)

Description

A variety of products for storm water inlets known as swirl separators, or hydrodynamic structures, have been widely applied in recent years. Swirl separators are modifications of the traditional oil-grit separator and include an internal component that creates a swirling motion as storm water flows through a cylindrical chamber. The concept behind these designs is that sediments settle out as storm water moves in this swirling path. Additional compartments or chambers are sometimes present to trap oil and other floatables. There are several different types of proprietary separators, each of which incorporates slightly different design variations, such as off-line application. Another common manufactured product is the catch basin insert. These products are discussed briefly in the Catch Basin fact sheet.

Applicability

Swirl separators are best installed on highly impervious sites. Because little data are available on their performance, and independently conducted studies suggest marginal pollutant removal, swirl separators should not be used as a stand-alone practice for new development. The best

application of these products is as pretreatment to another storm water device, or in a retrofit situation where space is limited.

Limitations

Limitations to swirl separators include:

- Very little data are available on the performance of these practices, and independent studies suggest only moderate pollutant removal. In particular, these practices are ineffective at removing fine particles and soluble pollutants.
- The practice has a high maintenance burden (i.e., frequent cleanout).
- Swirl concentrators are restricted to small and highly impervious sites.

Siting and Design Considerations

The specific design of swirl concentrators is specified by product literature available from each manufacturer. For the most part, swirl concentrators are a rate-based design. That is, they are sized based on the peak flow of a specific storm event. This design contrasts with most other storm water management practices, which are sized based on capturing and storing or treating a specific volume. Sizing based on flow rate allows the practice to provide treatment within a much smaller area than other storm water management practices.

Maintenance Considerations

Swirl concentrators require frequent maintenance (typically quarterly). Maintenance is performed using a vactor truck, as is used for catch basins (see Catch Basin). In some regions, it may be difficult to find environmentally acceptable disposal methods. The sediments may not always be land-filled, land-applied, or introduced into the sanitary sewer system due to hazardous waste, pretreatment, or groundwater regulations. This is particularly true when catch basins drain runoff from hot spot areas.

Effectiveness

While manufacturers' literature typically reports removal rates for swirl separator design, there is actually very little independent data to evaluate the effectiveness of these products. Two studies investigated one of these products. Both studies reported moderate pollutant removal. While the product outperforms oil/grit separators, which have virtually no pollutant removal (Schueler, 1997), the removal rates are not substantially different from the standard catch basin. One long-term advantage of these products over catch basins is that, if they incorporate an off-line design, trapped sediment will not become resuspended. Data from two studies are presented below. Both of these studies are summarized in a Claytor (1999).

Table 1. Effectiveness of manufactured products for storm water inlets

Study	Greb et al., 1998	Labatiuk et al., 1997
Notes	Investigated 45 precipitation events over a 9-month period. Percent removal rates reflect overall efficiency, accounting for pollutants in bypassed flows.	Data represent the mean percent removal rate for four storm events.
TSS[a]	21	51.5
TDS[a]	-21	-
TP[a]	17	-
DP[a]	17	-
Pb[a]	24	51.2
Zn[a]	17	39.1
Cu[a]	-	21.5
PAH[a]	32	-
NO_2+NO_3[a]	5	-

[a] TSS=total suspended solids; TDS=total dissolved solids; TP=total phosphorus; DP=dissolved phosphorus; Pb=lead; Zn=zinc; Cu=copper; PAH=polynuclear aromatic hydrocarbons; NO_2+NO_3=nitrite+nitrate-nitrogen

Cost Considerations

A typical swirl separator costs between $5,000 and $35,000, or between $5,000 and $10,000 per impervious acre. This cost is within the range of some sand filters, which also treat highly urbanized runoff (see Sand Filters). Swirl separators consume very little land, making them attractive in highly urbanized areas.

The maintenance of these practices is relatively expensive. Swirl concentrators typically require quarterly maintenance, and a vactor truck, the most common method of cleaning these practices, costs between $125,000 and $150,000. This initial cost may be high for smaller Phase II communities. However, it may be possible to share a vactor truck with another community. Depending on the rules within a community, disposal costs of the sediment captured in swirl separators may be significant.

References

Claytor, R. 1999. Performance of a proprietary stormwater treatment device: The Stormceptor®. *Watershed Protection Techniques* 3(1):605–608.

Greb, S., S. Corsi, and R. Waschbusch. 1998. Evaluation of Stormceptor® and multi-chamber treatment train as urban retrofit strategies. In *Proceedings: National Conference on Retrofit Opportunities for Water Resource Protection in Urban Environments, Chicago, IL, February 9–12, 1998.* U.S. Environmental Protection Agency, Washington, DC.

Labatiuk, C., V. Natal, and V. Bhardwaj. 1997. Field evaluation of a pollution abatement device for stormwater quality improvement. In *Proceedings of the 1997 CSCE-ASCE Environmental Engineering Conference, Edmonton, Alberta.* Canadian Society for Civil Engineering, Montréal, Québec, and American Society of Civil Engineers, Reston, VA.

Schueler, T. 1997. Performance of oil-grit separator at removing pollutants at small sites. *Watershed Protection Techniques* 2(4): 539–542.

King County, WA. 2000. *King County Surface Water Design Manual.* [splash.metrokc.gov/wlr/dss/manual.htm]. Last updated March 6, 2000. Accessed January 5, 2001.

On-lot Treatment

On-Lot Treatment

Postconstruction Storm Water Management in New Development and Redevelopment

Description

A rain barrel is used to collect rooftop runoff using a gutter/downspout system

The term "on-lot treatment" refers to a series of practices that are designed to treat runoff from individual residential lots. The primary purpose of most on-lot practices is to manage rooftop runoff and, to a lesser extent, driveway and sidewalk runoff. Rooftop runoff, and particularly residential rooftop runoff, generally has low pollutant concentrations compared with other urban sources (Schueler, 1994b). The primary advantage of managing runoff from rooftops is to disconnect these impervious surfaces, reducing the effective impervious cover in a watershed. Many of the impacts of urbanization on the habitat and water quality of streams are related to the fundamental change in the hydrologic cycle caused by the increase of impervious cover in the landscape (Schueler, 1994a).

Although there are a wide variety of on-lot treatment options, they can all be classified into one of three categories: 1) practices that infiltrate rooftop runoff; 2) practices that divert runoff or soil moisture to a pervious area; and 3) practices that store runoff for later use. The best option depends on the goals of a community, the feasibility at a specific site, and the preferences of the homeowner.

The practice most often used to infiltrate rooftop runoff is the dry well. In this design, the storm drain is directed to an underground rock-filled trench that is similar in design to an infiltration trench (see Infiltration Trench fact sheet). French drains or Dutch drains can also be used for this purpose. In these designs, the relatively deep dry well is replaced with a long trench with a perforated pipe within the gravel bed to distribute flow throughout the length of the trench.

Runoff can be diverted to a pervious area or to a treatment area using site grading, or channels and berms. Treatment options can include grassed swales, bioretention, or filter strips. The bioretention design can be simplified for an on-lot application by limiting the pre-treatment filter and in some cases eliminating the underdrain (see Bioretention fact sheet). Alternatively, rooftop runoff can simply be diverted to pervious lawn areas, as opposed to flowing directly to the street and thus to the storm drain system.

Practices that store rooftop runoff, such as cisterns and rain barrels, are the simplest in design of all of the on-lot treatment systems. Some of these practices are available commercially and can

be applied in a wide variety of site conditions. Cisterns and rain barrels are particularly valuable in the arid southwest, where water is at a premium, rainfall is infrequent, and reuse for irrigation can save homeowners money.

Application

Some sort of on-lot treatment can be applied to almost all sites, with very few exceptions (e.g., very small lots or lots with no landscaping). Traditionally, on-site treatment of residential storm water runoff has been encouraged, but has not generally been an option to meet storm water requirements. There are currently at least two jurisdictions, however, who offer "credits" in exchange for the application of on-site storm water management practices. In Denver, Colorado, sites designed with methods to reduce "directly connected impervious cover," including disconnection of downspout runoff from the storm system, are permitted to use a lower site impervious area when computing the required storage of storm water facilities (DUDFCD, 1992). Similarly, new regulations for Maryland allow designers to subtract each rooftop that is disconnected from the total site impervious cover when calculating required storage in storm water management practices (MDE, 2000).

Siting and Design Considerations

Although most residential lots can incorporate on-lot treatment, the best option for a site depends on site design constraints and the preferences of the homeowner. On-lot infiltration practices have the same restrictions regarding soils as other infiltration practices (see Infiltration Basin and Infiltration Trench fact sheets). If other design practices are used, such as bioretention or grassed swales, they need to meet the siting requirements of those practices (see Bioretention and Grassed Swale fact sheets). Of all of the practices, cisterns and rain barrels have the fewest site constraints. In order for the practice to be effective, however, homeowners need to have a use for the water stored in the practice, and the design must accommodate overflow and winter freezing conditions. These practices are best suited to an individual who has some active interest in gardening or landscaping.

Although these practices are simple compared with many other post construction storm water practices, the design needs to incorporate the same basic elements of any storm water practice. Pretreatment is important for all of these practices to ensure that they do not become clogged with leaf debris. Infiltration practices may be preceded by a settling tank or, at a minimum, a grate or filter in the downspout to trap leaves and other debris. Rain barrels and cisterns also often incorporate some sort of pretreatment, such as a mesh filter at the top of the barrel or cistern.

Both infiltration practices and storage practices typically incorporate some type of bypass so that larger storms flow away from the house. In rain barrels or cisterns, this bypass may be a hose set at a high level of the practice and directed away from the practice and building foundation. These practices also include a hose set at the elevation of the bottom of the practice. The homeowner can use the practice to irrigate landscaping or for other uses by attaching this hose to a standard garden hose, and controlling flow with an adjustable valve. In infiltration practices the bypass may be an aboveground opening of the downspout. As on-lot practices, grassed swales and bioretention can be designed on-line. The design directs all flows to the management practice, but larger flows generally flow over the practice and are not treated.

One important design feature of infiltration practices is that the infiltration area must be located sufficiently far from the house's foundation to prevent undermining of the foundation or seepage into basements. The infiltration area should be separated from the house by at least 10 feet to prevent these problems.

Limitations

There are some limitations to the use of on-lot practices, including the following:

- These practices require some maintenance and require some effort on the part of the homeowner.
- For homeowners who do not enjoy landscaping, it may be difficult for them to find a use for water stored in a rain barrel or cistern, since the water is not potable.
- On small lots, some of these practices may be impractical.
- Even if applied to every home in a watershed, these practices would only treat a relatively small portion of the watershed imperviousness, which is largely composed of roads and parking areas (see Narrower Residential Streets and Green Parking fact sheets).

Maintenance Considerations

Bioretention areas, filter strips, and grassed swales require regular maintenance to ensure that the vegetation remains in good condition (see Bioretention; Grassed Filter Strip; and Grassed Swale fact sheets). Infiltration practices require regular removal of sediment and debris settled in the pretreatment area, and the media might need to be replaced if it becomes clogged (see Infiltration Trench fact sheet). Rain barrels and cisterns require minimal maintenance, but the homeowner needs to ensure that the hose remains elevated during the winter to prevent freezing and cracking. In addition, the tank needs to be cleaned out approximately once per year.

Effectiveness

Although the practices used for on-lot applications can have relatively high pollutant removals (see Infiltration Trench; Bioretention; Grassed Filter Strip; and Grassed Swale fact sheets), it is not clear that these pollutant removal rates can be realized with the relatively low pollutant concentrations entering the practices. Some data suggest that, at least for storm water ponds, there may be an "irreducible concentration" below which no further pollutant removal can be achieved (Schueler, 1996). Another benefit of many on-lot practices is that they generally promote ground water recharge, either directly through infiltration or indirectly by applying or directing runoff to pervious areas.

Cost Considerations

On a cost per unit area treated, on-lot practices are relatively expensive compared with other storm water treatment options. It is difficult to make this comparison, however, because the cost burden of on-lot practices is born directly by homeowners. Typical costs are $100 for a rain barrel and $200 for a dry well or French drain. For many of these practices, homeowners can reduce costs by making their own on-lot practice rather than purchasing a commercial product.

Some treatment practices, such as rain barrels and on-lot bioretention, offer additional benefits to the homeowner that may offset the cost of applying the practice. Similarly, maintenance costs are essentially free, with the exception of replacement of a dry well system, which may require outside help.

References

Denver Urban Drainage and Flood Control District (DUDFCD). 1992. *Urban Storm Drainage Criteria Manual: Volume 3—Best Management Practices.* Denver Urban Drainage and Flood Control District, Denver, CO.

Maryland Department of the Environment (MDE). 2000. *Maryland Stormwater Design Manual.* [www.mde.state.md.us/environment/wma/stormwatermanual]. Accessed May 22, 2001.

Schueler, T. 1994a. The importance of imperviousness. *Watershed Protection Techniques* 1(3):100–111.

Schueler, T. 1994b. Sources of urban stormwater pollutants defined in Wisconsin. *Watershed Protection Techniques* 1(1):30–32.

Schueler, T. 1996. Irreducible pollutant concentrations discharged from urban BMPs. *Watershed Protection Techniques* 1(3):100–111.

Information Resources

City of Tucson, Arizona, Stormwater Quality Program. 1996. *Water harvesting fact sheets.* City of Tucson Stormwater Quality Program, Tucson, AZ.

Konrad, C., B. Jensen, S. Burges, and L. Reinelt. 1995. *On-Site Residential Stormwater Management Alternatives.* University of Washington, Seattle, WA.

Prince George's County, Maryland, Department of Environmental Resources. 1997. *Low Impact Development.* Prince George's County, Maryland, Department of Environmental Resources, Laurel, MD.

Schueler, T. 1987. *Controlling Urban Runoff: A Practical Manual for Planning and Designing Urban BMPs.* Metropolitan Washington Council of Governments, Washington, DC.

Center for Watershed Protection. 1998a. *Better Site Design: A Handbook for Changing Development Rules in Your Community.* Center for Watershed Protection, Ellicott City, MD.

Eliminating Curbs and Gutters

Postconstruction Storm Water Management in New Development and Redevelopment

Description

Developers can eliminate curbs and gutters to disconnect impervious surfaces and promote infiltration of storm water on vegetated areas (such as this grass-lined channel in a residential neighborhood)

This better site design practice involves promoting the use of grass swales as an alternative to curbs and gutters along residential streets. Curbs and gutters are designed to quickly convey runoff from the street to the storm drain and, ultimately, to the local receiving water. Consequently, curbs and gutters provide little or no removal of storm water pollutants. Indeed, curbs often act as a pollutant trap where deposited pollutants are stored until they are washed out in the next storm. Many communities require curb and gutters as a standard element of their road sections, and discourage the use of grass swales. Revisions to current local road and drainage regulations are needed to promote greater use of grass swales along residential streets, in the appropriate setting. The storm water management and pollutant removal benefits of grass swales are documented in detail in the Grassed Swales fact sheet.

Applicability

The use of engineered swales in place of curbs and gutters should be encouraged in low- and medium-density residential zones where soils, slope and housing density permit. However, eliminating curbs and gutters is generally not feasible for streets with high traffic volume or extensive on-street parking demand (i.e., commercial and industrial roads), nor is it a viable option in arid and semi-arid climates where grass cannot grow without irrigation. Moreover, the use of grass swales may not be permitted by current local or state street and drainage standards.

Siting and Design Conditions

A series of site factors must be evaluated to determine whether a grass swale is a viable replacement for curbs and gutters at a particular site.

Contributing drainage area. Most individual swales cannot accept runoff from more than 5 acres of contributing drainage area, and typically serve 1–2 acres each.

Slope. Swales generally require a minimum slope of 1 percent and a maximum slope of 5 percent.

Soils. The effectiveness of swales is greatest when the underlying soils are permeable (hydrologic soil groups A and B). The swale may need more engineering if soils are less permeable.

Water Table. Swales should be avoided if the seasonally high water table is within 2 feet of the proposed bottom of the swale.

Development Density. The use of swales is often difficult when development density becomes more intense than four dwelling units per acre, simply because the number of driveway culverts increases to the point where the swale essentially becomes a broken-pipe system. Typically, grass swales are designed with a capacity to handle the peak flow rate from a 10-year storm, and fall below erosive velocities for a 2-year storm.

Limitations

A number of real and perceived limitations hinder the use of grass swales as an alternative to curb and gutters:

- *Snowplow operation can be more difficult without a defined road edge.* However, on the plus side, roadside swales increase snow storage at the road edge, and smaller snowplows may be adequate.

- *The pavement edge along the swale can experience more cracking and structural failure, increasing maintenance costs.* The potential for pavement failure at the road/grass interface can be alleviated by "hardening" the interface with grass pavers or geo-synthetics placed beneath the grass. Other options include placing a low-rising concrete strip along the pavement edge.

- *The shoulder and open channel will require more maintenance.* In reality, maintenance requirements for grass channels are generally comparable to those of curb and gutter systems. The major requirements involve turf mowing, debris removal, and periodic inspections.

- *Some grass swales can have standing water, which make them difficult to mow, and can cause nuisance problems such as odors, discoloration, and mosquitoes.* In reality, grass channels are not designed to retain water for any appreciable period of time, and the potential for snakes and other vermin can be minimized by frequent mowing.

Other concerns involve fears about utility installation and worries that the grass edge along the pavement will be torn up by traffic and parking. While utilities will need to be installed below the paved road surface instead of the right of way, most other concerns can frequently be alleviated through the careful design and integration of the open channels along the residential street. (Consult the Grassed Swales fact sheet for details on design variations that can reduce these problems.)

Maintenance Considerations

The major maintenance requirement for grass swales involves mowing during the growing season, a task usually performed by homeowners. In addition, sediment deposits may need to be

removed from the bottom of the swale every ten years or so, and the swale may need to be tilled and re-seeded periodically. Occasionally, erosion of swale side slopes may need to be stabilized. The overall maintenance burden of grass swales is low in relation to other storm water practices, and is usually within the competence of the individual homeowner. The only major maintenance problem that might arise pertains to "problem" swales that have standing water and are too wet to mow. This particular problem is often alleviated by the installation of an underground storm drain system.

Effectiveness

Under the proper design conditions, grass swales can be effective in removing pollutants from urban storm water (Schueler, 1996). More information on the pollutant removal capability of various grass swale designs can be found in the Grassed Swales fact sheet.

Cost Considerations

Engineered swales are a much less expensive option for storm water conveyance than the curb and gutter systems they replace. Curbs and gutters and the associated underground storm sewers frequently cost as much as $36 per linear foot, which is roughly twice the cost of a grass swale (Schueler, 1995, and CWP, 1998). Consequently, when curbs and gutters can be eliminated, the cost savings can be considerable.

References

Center for Watershed Protection (CWP). 1998. *Better Site Design: A Handbook for Changing Development Rules in Your Community*. Center for Watershed Protection, Ellicott City, MD.

Schueler, T.R. 1995. *Site Planning for Urban Stream Protection*. Metropolitan Washington Council of Governments. Washington, DC.

Schueler, T.R. 1996. "Ditches or Biological Filters? Classifying the Pollutant Removal Performance of Open Channels." *Watershed Protection Techniques* 2(2) pp. 379–83.

Information Resources

Claytor, R.A., and T.R. Schueler. 1997. *Design of Stormwater Filtering Systems*. Center for Watershed Protection, Ellicott City, MD.

BMP Inspection and Maintenance

Postconstruction Storm Water Management in New Development and Redevelopment

Description

Regular inspection and maintenance of storm water best management practices is important to ensure that the practices are functioning properly and to remove trash and organic debris.

To maintain the effectiveness of postconstruction storm water control best management practices (BMPs), regular inspection of control measures is essential. Generally, inspection and maintenance of BMPs can be categorized into two groups—expected routine maintenance and nonroutine (repair) maintenance. Routine maintenance refers to checks performed on a regular basis to keep the BMP in good working order and aesthetically pleasing. In addition, routine inspection and maintenance is an efficient way to prevent potential nuisance situations (odors, mosquitoes, weeds, etc.), reduce the need for repair maintenance, and reduce the chance of polluting storm water runoff by finding and correcting problems before the next rain.

In addition to maintaining the effectiveness of storm water BMPs and reducing the incidence of pests, proper inspection and maintenance is essential to avoid the health and safety threats inherent in BMP neglect (Skupien, 1995). The failure of structural storm water BMPs can lead to downstream flooding, causing property damage, injury, and even death.

Applicability

Under the proposed Storm Water Phase II rule, owners and operators of small municipal separate storm sewer system (MS4) facilities would be responsible for implementing BMP inspection and maintenance programs and having penalties in place to deter infractions (USEPA, 1999). All storm water BMPs should be inspected for continued effectiveness and structural integrity on a regular basis. Generally, all BMPs should be checked after each storm event in addition to these regularly scheduled inspections. Scheduled inspections will vary among BMPs. Structural BMPs such as storm drain drop inlet protection may require more frequent inspection to ensure proper operation. During each inspection, the inspector should document whether the BMP is performing correctly, any damage to the BMP since the last inspection, and what should be done to repair the BMP if damage has occurred.

Siting and Design Considerations

In the case of vegetative or other infiltration BMPs, inspection of storm water management practices following a storm event should occur after the expected drawdown period for a given

BMP. This allows the inspector to see whether detention and infiltration devices are draining correctly.

Inspection checklists should be developed for use by BMP inspectors. Checklists might include each BMP's minimum performance expectations, design criteria, structural specifications, date of implementation, and expected life span. In addition, the maintenance requirements for each BMP should be listed on the inspection checklist. This will aid the inspector in determining whether a BMP's maintenance schedule is adequate or needs revision. Also, a checklist will help the inspector determine renovation or repair needs.

Limitations

Routine maintenance materials such as shovels, lawn mowers, and fertilizer may be easily obtained on short notice with little effort. Unfortunately, not all materials that may be needed for emergency structural repairs are obtained with such ease. Thought should be given to stockpiling essential materials in case immediate repairs must be made to safeguard against property loss and to protect human health.

Maintenance Considerations

It is important that routine maintenance and nonroutine repair of storm water BMPs be done according to schedule or as soon as a problem is discovered. Because many BMPs are rendered ineffective for runoff control if not installed and maintained properly, it is essential that maintenance schedules are maintained and repairs are made promptly. In fact, some cases of BMP neglect can have detrimental effects on the landscape and increase the potential for erosion. However, "routine" maintenance, such as mowing grasses, should be flexible enough to accommodate the fluctuations in need based on relative weather conditions. For example, more harm than good may be caused by mowing during an extremely dry period or immediately following a storm event.

Effectiveness

The effectiveness of BMP inspection will be a function of the familiarity of the inspector with each particular BMP's location, design specifications, maintenance procedures, and performance expectations. Documentation should be kept regarding the dates of inspection, findings, and maintenance and repairs that result from the findings of an inspector. Such records are helpful in maintaining an efficient inspection and maintenance schedule and providing evidence of ongoing inspection and maintenance.

Because maintenance work for storm water BMPs is usually not technically complicated (mowing, removal of sediment, etc.), workers can be drawn from a large labor pool. As structural BMPs increase in their sophistication, however, more specialized maintenance training might be needed to sustain BMP effectiveness.

Cost Considerations

Mowing of vegetated and grassed areas may be the costliest routine maintenance consideration (WEF, 1998). Management practices using relatively weak materials (such as filter fabric and wooden posts) may mean more frequent replacement and therefore increased costs. The use of more sturdy materials (such as metal posts) where applicable may increase the life of certain BMPs and reduce replacement cost. However, the disposal requirements of all materials should

be investigated before BMP implementation to ensure proper handling after the BMP has become ineffective or when it needs to be disposed of after the site has reached final stabilization. Table 1 shows maintenance costs, specific activities, and schedules for several postconstruction runoff BMPs.

Table 1. Maintenance costs, activities, and schedules for urban management practices (Adapted from CWP, 1998)

Type of Practice	Management Practice	Annual Maintenance Cost (% of Construction Cost)	Maintenance Cost for a "Typical" Application	Maintenance Activity	Schedule
Detention/ Retention Practices	Ponds/ wetlands	3%–6%	$3,000 to $6,000	• Cleaning and removal of debris after major storm events; (>f rainfall) • Harvest vegetation when a 50% reduction in the original open water surface area occurs • Repair of embankment and side slopes • Repair of control structure	Annual or as needed
				• Removal of accumulated sediment from forebays or sediment storage areas when 60% of the original volume has been lost	5-year cycle
				• Removal of accumulated sediment from main cells of pond once 50% of the original volume has been lost	20-year cycle
	Dry Ponds	~1%	$1,200	See above	
	Wetlands	~2%	$3,800	See above	
Infiltration Facilities	Infiltration Trench	5%–20%	$2,300 to $9,000	• Cleaning and removal of debris after major storm events; (>2" rainfall) • Mowing and maintenance of upland vegetated areas • Sediment cleanout • Repair or replacing of stone aggregate • Maintenance of inlets and outlets	Annual or as needed
				• Removal of accumulated sediment from forebays or sediment storage areas when 50% of the original volume has been lost	4-year cycle
	Infiltration Basin	1%–10%	$150–$1,500	• Cleaning and removal of debris after major storm events; (>2" rainfall) • Mowing and maintenance of upland vegetated areas • Sediment cleanout	Annual or as needed
				• Removal of accumulated sediment from forebays or sediment storage areas when 50% of the original volume has been lost	3- to 5-year cycle

Table 1. (continued)

Type of Practice	Management Practice	Annual Maintenance Cost (% of Construction Cost)	Maintenance Cost for a "Typical" Application	Maintenance Activity	Schedule
Filtration Practices	Sand Filters	11%–13%	$2,200	• Removal of trash and debris from control openings • Repair of leaks from the sedimentation chamber or deterioration of structural components • Removal of the top few inches of sand, and cultivation of the surface, when filter bed is clogged	Annual or as needed
				• Clean out of accumulated sediment from filter bed chamber once depth exceeds approximately ½ inch, or when the filter layer will no longer draw down within 24 hours • Clean out of accumulated sediment from sedimentation chamber once depth exceeds 12 inches	3- to 5-year cycle
	Dry Swales, Grassed Channels, Biofilters	5%–7%	$200 to $2,000	• Mowing and litter/debris removal • Stabilization of eroded side slopes and bottom • Nurtient and pesticide use management • Dethatching swale bottom and removal of thatching • Discing or aeration of swale bottom	Annual or as needed
				• Scraping swale bottom and removal of sediment to restore original cross section and infiltration rate • Seeding or sodding to restore ground cover (use proper erosion and sediment control)	5-year cycle
	Filter Strips	$320/acre (maintained)	$1,000	• Mowing and litter/debris removal • Nutrient and pesticide use management • Aeration of soil on the filter strip • Repair of eroded or sparse grass areas	Annual or as needed
	Bioretention	5%–7%	$3,000 to $4,000	• Repair of erosion areas • Mulching of void areas • Removal and replacement of all dead and diseased vegetation • Watering of plant material	Biannual or as needed
				• Removal of mulch and application of a new layer	Annual

References

Center for Watershed Protection (CWP). 1998. *Costs and Benefits of Storm Water BMP's: Final Report 9/14/98.* Center for Watershed Protection, Ellicott City, MD.

Skupien, J. 1995. Postconstruction Responsibilities for Effective Performance of Best Management Practices. In *National Conference on Urban Runoff Management: Enhancing Urban Watershed Management at the Local, County, and State Levels. Seminar Publication.* EPA 625-R-95-003. U.S. Environmental Protection Agency, Office of Water, Washington, DC.

USEPA. 1999. *Fact Sheet 2.6: Storm Water Phase II Proposed Rule, Construction Site Runoff Control Minimum Control Measure.* EPA 833-F-99-008. U.S. Environmental Protection Agency, Office of Water, Washington, DC.

Water Environment Federation. 1998. *Urban Runoff Quality Management.* WEF Manual of Practice No. 23, ASCE Manual and Report on Engineering Practice No. 87. Water Environment Federation and American Society of Civil Engineers, Alexandria, VA.

United States Environmental Protection Agency
Office of Water Washington, D.C.
EPA 832-F-99-017 September 1999

Storm Water Technology Fact Sheet
Hydrodynamic Separators

DESCRIPTION

Hydrodynamic separators are flow-through structures with a settling or separation unit to remove sediments and other pollutants that are widely used in storm water treatment. No outside power source is required, because the energy of the flowing water allows the sediments to efficiently separate. Depending on the type of unit, this separation may be by means of swirl action or indirect filtration. A generalized schematic of a unit is shown in Figure 1. Variations of this unit have been designed to meet specific needs.

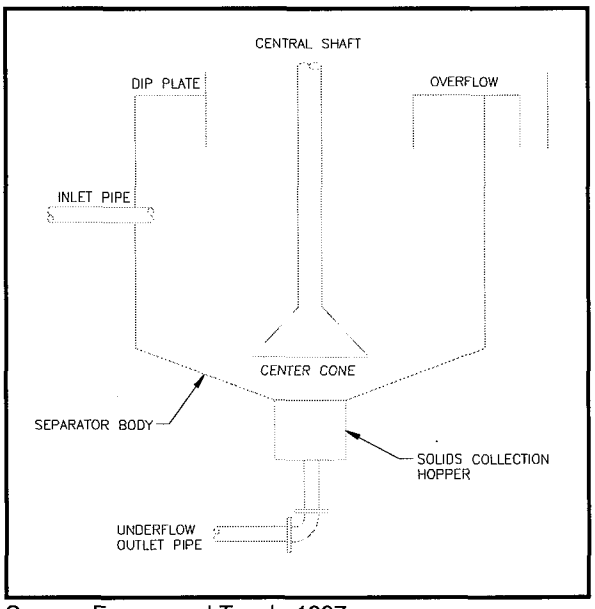

Source: Fenner and Tyack, 1997.

FIGURE 1 GENERALIZED HYDRODYNAMIC SEPARATOR

Hydrodynamic separators are most effective where the materials to be removed from runoff are heavy particulates - which can be settled - or floatables - which can be captured, rather than solids with poor settleability or dissolved pollutants.

In addition to the standard units, some vendors offer supplemental features to reduce the velocity of the flow entering the system. This increases the efficiency of the unit by allowing more sediments to settle out.

APPLICABILITY

This technology may be used by itself or in conjunction with other storm water BMPs as part of an overall storm water control strategy. Hydrodynamic separators come in a wide size range and some are small enough to fit in conventional manholes. This makes hydrodynamic separators ideal for areas where land availability is limited. Also, because they can be placed in almost any specific location in a system, hydrodynamic separators are ideal for use in potential storm water "hotspots"--areas such as near gas stations, where higher concentrations of pollutants are more likely to occur.

The need for hydrodynamic separators is growing as a result of decreasing land availability for the installation of storm water BMPs. This fact sheet discusses hydrodynamic separator systems from four vendors. Although there are many hydrodynamic separation systems available, these four address the major types.

They are the following:

- Continuous Deflective Separation (CDS).

- Downstream Defender™.
- Stormceptor®.
- Vortechs™.

Continuous Deflective Separation (CDS)

CDS' hydrodynamic separator technology is suitable for gross pollutant removal. The system utilizes the natural motion of water to separate and trap sediments by indirect filtration. As the storm water flows through the system, a very fine screen deflects the pollutants, which are captured in a litter sump in the center of the system. Floatables are retained separately. This non-blocking separation technique is the only technology covered in this fact sheet that does not rely on secondary flow currents induced by vortex action.

The processing capacities of CDS units vary from 3 to 300 cubic feet per second (cfs), depending on the application. Precast modules are available for flows up to 62 cfs, while higher flow processing requires cast-in-place construction. Every unit requires a detailed hydraulic analysis before it is installed to ensure that it achieves optimum solids separation. The cost per unit (including installation) ranges from $2,300 to $7,200 per cfs capacity, depending on site-specific conditions and does not include any required maintenance.

Maintenance of the CDS technology is site-specific but the manufacturer recommends that the unit be checked after every runoff event for the first 30 days after installation. During this initial installation period the unit should be visually inspected and the amount of deposition should be measured, to give the operator an idea of the expected rate of sediment deposition. Deposition can be measured with a calibrated "dip stick". After this initial operation period, CDS Technologies recommends that the unit should be inspected at least once every thirty days during the wet season. During these inspections, the floatables should be removed and the sump cleaned out (if it is more than 85 percent full). It is also recommended that the unit be pumped out and the screen inspected for damage at least once per year.

A recently completed study by UCLA for CDS Technologies evaluating the effectiveness of four different sorbent materials in removing used motor oil at concentrations typically found in storm water runoff. They applied the sorbents in a CDS unit separation chamber and reported captures of 80-90 percent. The test found that polypropylene or co-polymer sorbents to be the most effective in the capture of the used motor oil.

Downstream Defender

The Downstream Defender, manufactured by H.I.L. Technology, Inc., regulates both the quality and quantity of storm water runoff. The Downstream Defender is designed to capture settleable solids, floatables, and oil and grease. It utilizes a sloping base, a dip plate and internal components to aid in pollutant removal. As water flows through the unit, hydrodynamic forces cause solids to begin settling out. A unique feature of this unit is its sloping base (see Figure 1), which is joined to a benching skirt at a 30-degree angle. This feature helps solids to settle out of the water column. The unit's dip plate encourages solids separation and aids in the capture of floatables and oil and grease. All settled solids are stored in a collection facility, while flow is discharged through an outlet pipe. H.I.L. Technology reports that this resulting discharge is 90 percent free of the particles greater than 150 microns that originally entered the system.

The Downstream Defender comes in predesigned standard manhole size, typically ranging from 4 to 10 feet in diameter. These units have achieved 90 percent removal for flows from 0.75 cfs to 13 cfs. To meet specific performance criteria, or for larger flow applications, units may be custom designed up to 40 feet in diameter. (These are not able to fit in conventional manholes.) The approximate capital and installation costs, range from $10,000 to $35,000 per pre-cast unit.

Inspecting the Downstream Defender periodically (once a month) over the first year of operation will aid in determining the rate of sediment and floatables accumulation. A probe (or dipstick) may be used to help determine the sediment depth in the collection facility. (With this inspection information a maintenance schedule may be established.) A

sump vac (commercial or municipally-owned) may be used to remove captured floatables and solids. With proper upkeep, H.I.L. Technology reports the Downstream Defender will treat storm water for more than 30 years.

Stormceptor

Stormceptor Corporation is based in Canada and has licensed manufacturers throughout Canada and the United States. Stormceptor is designed to trap and retain a variety of non-point source pollutants, using a by-pass chamber and treatment chamber. Stormceptor reports that it is capable of removing 50 to 80 percent of the total sediment load when used properly.

Stormceptor units are available in prefabricated sizes up to 12 feet in diameter by 6 to 8 feet deep. Customized units are also available for limited spaces. Stormceptor recommends its units for the following areas:

- Redevelopment projects of more than 2,500 square feet where there was no previous storm water management (even if the existing impervious area is merely being replaced).
- Projects that result in doubling the impervious area.
- Projects that disturb at least half of the existing site.

The cost of the Stormceptor unit is based on the costs of two important system elements:

- A treatment chamber and by-pass insert.
- Access way and fittings.

Typically, the cost for installation of a unit for a one acre drainage area is $9,000. This cost will vary depending on site-specific conditions. Stormceptor units range from 900 to 7,200 gallons and cost between $7,600 and $33,560. Cleaning costs depend on several factors, including the size of the installed unit and travel costs for the cleaning crew. Cleaning usually takes place once per year and costs approximately $1,000 per structure.

Vacuum trucks are used to clean out the Stormceptor unit. Although annual maintenance is recommended, maintenance frequency will be based on site-specific conditions. The need for maintenance is indicated by sediment depth; typically, when the unit is filled to within one foot of capacity, it should be cleaned. Visual inspections may also be performed and are especially recommended for units that may capture petroleum-based pollutants. The visual inspection is accomplished by removing the manhole cover and using a dipstick to determine the petroleum or oil accumulation in the unit.

If the Stormceptor unit is not maintained properly, approximately 15 percent of its total sediment capacity will be reduced each year.

Vortechs

The Vortechs™ storm water treatment system, manufactured by Vortechnics™ of Portland, Maine, has been available since 1988. Like the other hydrodynamic separators, Vortechs removes floating pollutants and settleable solids from surface runoff. This system combines swirl-concentrator and flow-control technologies to separate solids from the flow. Constructed of precast concrete, Vortechs uses four structures to optimize storm water treatment through its system. These are:

- *Baffle wall*: Situated permanently below the water line, this structure helps to contain floating pollutants during high flows and during clean outs.
- *Circular grit chamber*: This structure aids in directing the influent into a vortex path. The vortex action encourages sediment to be caught in the swirling flow path and to settle out later, when the storm event is complete.
- *Flow control chamber*: This device helps keep pollutants trapped by reducing the forces that encourage resuspension and washout. This chamber also helps to

eliminate turbulence within the system.

- *Oil chamber*: This structure helps to contain floatables.

Vortechnics manufactures nine standard-sized units. These range from 9 feet by 3 feet to 18 feet by 12 feet. The unit sizes depend on the estimated runoff volume to be treated. For specific applications, dimensions of the runoff area are used to customize the unit. Vortechnics reports that Vortechs systems are able to treat runoff flows ranging from 1.6 cfs to 25 cfs. The cost for these units ranges from $10,000 to $40,000, not including shipment or installation.

As with other hydrodynamic separator systems, maintenance of the Vortechs system is site-specific. Frequent inspections (once a month) are recommended during the first year and whenever there may be heavy contaminant loadings: after winter sandings, soil disturbances, fuel spills, or sometimes, intense rain or wind.

The Vortechs unit requires cleaning only when the system has nearly reached capacity. This occurs when the sediment reaches within one foot of the inlet pipe. The depth may be gauged by measuring the sediment in the grit chamber with a rod or dipstick. To clean out the system, the manhole cover above the grit chamber is lifted and the sediment is removed using as vacuum truck. Following sediment removal, the manhole cover is replaced securely to ensure that runoff does not leak into the unit.

Hydrodynamic separators are most effective where the separation of heavy particulate or floatable from wet weather runoff is required. (The typical concentrations of heavy particulate and floatable pollutants found in storm water are shown in Table 1.) They are designed to remove settleable solids and capture floatables; however, suspended solids are not effectively removed. Most units are small (depending on the flow entering needing to be treated) and may be able to fit into pre-existing manholes. For this reason, this technology is particularly well suited to locations where there is limited land available.

TABLE 1 CONCENTRATION OF POLLUTANTS IN STORM WATER

Pollutant	Concentration
TSS	100 mg/L
Total P	0.33 mg/L
TKN	1.50 mg/L
Total Cu	34 µg/L
Total Pb	144 µg/L
Total Zn	160 µg L

Source: U.S. EPA, 1995.

The units designed for hydrodynamic separators are generally prefabricated in set sizes up to twelve feet in diameter, but they may be customized for a specific site if needed. Some structures are available in concrete or fiberglass. (Fiberglass is recommended for areas of potential hazardous material spills.) These materials are both suitable for retrofit applications.

Hydrodynamic separators are also good for potential storm water "hotspots" or sites that fall under industrial NPDES storm water requirements. "Hotspots" are areas such as gas stations, where a higher concentration of pollutants is more likely to be found.

ADVANTAGES AND DISADVANTAGES

The use of hydrodynamic separators as wet weather treatment options may be limited by the variability of net solids removal. While some data suggest excellent removal rates, these rates often depend on site-specific conditions, as well as other contributing factors. Pollutants such as nutrients, which adhere to fine particulates or are dissolved, will not be significantly removed by the unit.

Site constraints, including the availability of suitable land, appropriate soil depth, and stable soil to support the unit structurally, may also limit the applicability of the hydrodynamic separator. The slope of the site or collection system may

necessitate the use of an underground unit, which can result in an extensive excavation.

Observable improvements in waterways are often attributable to the use of hydrodynamic separators. This is due to the reduction of sediments, floatables, and oil and grease in the flow out of the unit. These positive impacts are only achievable when proper design and O&M of the unit are implemented.

PERFORMANCE

Hydrodynamic separators are designed primarily for removing floatable and gritty materials; they may have difficulty removing the less-settleable solids generally found in storm water. The reported removal rates of sediments, floatables, and oil and grease differ depending on the vendor. Proper design and maintenance also affect the unit's performance.

OPERATION AND MAINTENANCE

Hydrodynamic separators do not have any moving parts, and are consequently not maintenance intensive. However, maintaining the system properly is very important in ensuring that it is operating as efficiently as possible. Proper maintenance involves frequent inspections throughout the first year of installation. The unit is full when the sediment level comes within one foot of the unit's top. This is recognized through experience or the use of a "dip stick" or rod for measuring the sediment depth. When the unit has reached capacity, it must be cleaned out. This may be performed with a sump vac or vacuum truck, depending on which unit is used. In general, hydrodynamic separators require a minimal amount of maintenance, but lack of attention will lower their overall efficiency.

COSTS

The capital costs for hydrodynamic separators depend on site-specific conditions. These costs are based on several factors including the amount of runoff (in cfs) required to be treated, the amount of land available, and any other treatment technologies that are presently being used. Capitol costs can range from $2,300 to $40,000 per pre-cast unit. Units which are site-specifically designed, typically cost more and the price is based on the individual site.

Total costs for hydrodynamic separators often include predesign costs, capital costs, and operation and maintenance (O&M) costs. Again, these costs are site-specific. The predesign costs depend upon the complexity of the intended site. O&M costs vary based on the company contracted to clean out the unit, and may depend on travel distances and cleaning frequency. These costs generally are low (maximum of $1,000 a year) and vary from year to year.

The individual unit prices are discussed in the current status section previously mentioned. This covers a more in depth price range of the various systems.

REFERENCES

1. City of Alexandria, Virginia, 1998. Warren Bell, City of Alexandria Department of Transportation and Environmental Services, personal communication with Parsons Engineering Science, Inc.

2. Allison, R.A., T.H.F. Wong, and T.A. McMahon, 1996. "Field Trials of the Pollutec Stormwater Pollution Trap." Water, Vol. 23, No. 5, pp. 29-33.

3. CDS Technologies, Inc., 1998. Literature provided by manufacturer.

4. Downstream Defender, 1998. Literature provided by manufacturer.

5. England, Gordon, 1998. "Baffle Boxes and Inlet Devices for Storm Water BMPs." Internet site at [http://www.stormwater-resources.com/], accessed July 1998.

6. The Massachusetts Strategic Envirotechnology Partnership (STEP) Technology Assessment, Stormceptor, January 1998. Internet site at

[http://www.state.ma.us/step/strmcptr.htm], accessed July 1998.

7. Stenstrom, M. K. and Sim-Lin Lau. July, 1998. *Oil and Grease Removal by Floating Sorbent in a CDS Device.* Los Angeles, CA. Prepared for CDS Technologies.

8. Stormceptor, 1998. Literature provided by manufacturer.

9. Tyack, J.N., and R.A. Fenner, 1997. "The Use of Scaling Laws in Characterising Residence Time in Hydrodynamic Separators." Presented at the 1997 IAWQ Conference, Aalborg, Denmark.

10. U.S. EPA, July 5, 1995. EPA Clean Water Act Section 403 Report to Congress, NPDES Permitting Program. EPA 842-R-94-001.

11. Virginia Department of Environmental Quality, 1998. Joe Battiata, Virginia Department of Environmental Quality, personal communication with Parsons Engineering Science, Inc.

12. Vortechs. July, 1998. Literature provided by manufacturer.

13. Wong, Tony H.F., Djula Fabian and Richard M. Wootton, 1996. "Hydraulic Performance and Sediment Trapping Efficiencies of a Dual Outlet CDS Device." Provided by CDS Technologies, Inc., submitted for publication in the ASCE Journal of Hydraulic Engineering.

ADDITIONAL INFORMATION

CDS Technologies Inc.
Ernest Mathia
1005 Wetherby Way
Alpharetta, GA 30022

Center for Watershed Protection
Tom Schueler
8391 Main Street
Ellicott City, MD 21043

H.I.L. Technology, Inc.
Pam Deahl
94 Hutchins Drive
Portland, ME 04102

Stormceptor
Vincent H. Berg, PE
600 Jefferson Plaza, Suite 304
Rockville, MD 20852

Vortechnics
Greg Norvick
41 Evergreen Drive
Portland, ME 04103

The mention of trade names or commercial products does not constitute endorsement or recommendation for the use by the U.S. Environmental Protection Agency.

For more information contact:

Municipal Technology Branch
U.S. EPA
Mail Code 4204
401 M St., S.W.

OWM MTB
Excellence in compliance through optimal technical solutions
MUNICIPAL TECHNOLOGY BRANCH

Detention Basin

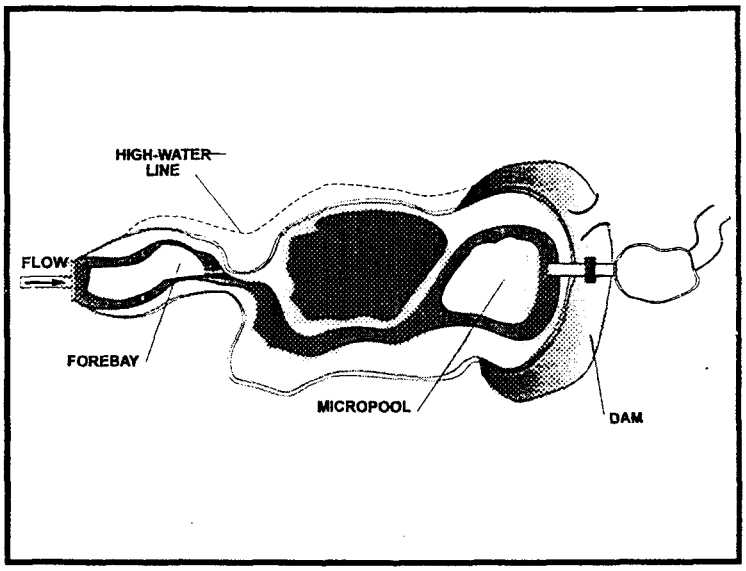

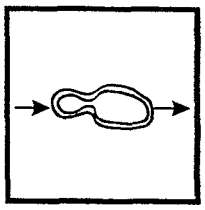

BMP Objectives

- ● Sediment
- ○ Oil and Grease
- ○ Metals and Toxics
- ○ Nutrients
- ○ Bacteria and Viruses

- ● Highly Effective
- ○ Low Effectiveness

Definition and Purpose

A detention basin is a permanent device formed by excavating and/or constructing an embankment so that runoff from the water quality design storm is temporarily detained under quiescent conditions, allowing sediment and particulates to settle out before the runoff is discharged.

Appropriate Applications

Consider detention basins for use when:

1. Runoff from the completed facility will discharge to significant areas of highly valuable habitat in which Federal or State listed aquatic resources have been identified; and,
2. Caltrans runoff will constitute a substantial portion (more than 10 percent) of the total flows to such habitat

- Detention basins are used upstream of receiving waters to remove sediment or other pollutants from storm water runoff from highways, roads, parking lots and rest areas, and maintenance areas.
- Detention basins can be used where less permeable soils and/or restrictive subsurface conditions prevent the use of infiltration basins for pollutant removal.
- Detention basins can be designed and constructed in conjunction with flood control basins to reduce peak storm water flow rates for drainage areas where the hydraulic capacity of receiving waters is limited (e.g., 2, 5, 10, 100-yr storms).
- Usual highway placement locations are cloverleaves and dedicated areas in the right-of-way.

Limitations

- The quality of the runoff and the intent of the basin should be considered. If the basin is being considered for highly soluble pollutant removal such as nutrients, then an infiltration basin is preferred.
- Detention basins require a large surface area (0.5 to 3% of the contributing drainage area) to permit settling of sediment. Space may be limited for a particular a site.
- Detention basins are not typically practical for small drainage areas because the necessary outflow control requires small outlets that clog rapidly.
- If upstream erosion is not properly controlled, detention basins can be maintenance intensive with respect to sediment removal, nuisance odors, and insects (i.e., mosquitoes), etc.
- Detention basins require a differential elevation between inlets and outlets and thus, may be limited by terrain.

Design Guidance

Coordinate design of detention basins with the district's Hydraulics Division for the use of spreadsheets and computer programs such as HY-22. The following are presented as guidelines for designing detention basins:

General Guidance

- A small permanent pool area can be integrated into the facility if desired (see Figure 3). The pool can be an aesthetic enhancement and can submerge first flush sediment loads that are washed into the basin. If the permanent pool dries up during the summer, this is not a problem.
- Access: A permanent area should be provided around the perimeter of the impoundment to allow maintenance. Provisions should also be made for emptying the basin as necessary for maintenance procedures.
- Volume: Caltrans has adopted a maximum design goal of sizing detention basins to capture the entire runoff from a treatment design storm event. Determine the treatment design storm event for either the closest rain gauge to the project site, or the average of the closest 2-3 gauges, particularly where there is a significant elevation difference between the closest gauge and the project site. The runoff produced by this storm based upon the characteristics of the project drainage area after completion of the project should then be calculated and the resulting volume used as a maximum design target.

  The basic data requirements for a design analysis are:

  - the inflow peak discharge and hydrograph;
  - the (allowable) outflow peak discharge;
  - the basin stage-storage relationship; and

- the outlet stage-discharge relationship.

The design process consists of establishing the inflow/storage/outflow relationship and adjusting the storage volume and outflow characteristics until the design objectives are met. In most cases, the inflow is fixed by upstream conditions, and the outflow is fixed by the design goals. The purpose of the analysis then is to determine the appropriate basin type, storage volume and outlet configuration. In many cases for roadway drainage design, the storage volume and basin type may be fixed, and the analysis determines the size of the outlet. Figure 1 is a graphical representation of the storage volume required for on-line detention, off-line detention, and infiltration basins.

The inflow peak discharge and hydrograph are obtained through hydrologic analysis of the upstream watershed. Hydrologic analysis is discussed in detail the FHWA publication "Practical Highway Hydrology", Highway Drainage Series #2, and Hydraulic Engineering Circular #22 (HEC22). A thorough discussion is also found in the Caltrans Highway Design Manual, Chapter 810. The peak discharge is obtained by developing a rainfall-runoff relationship and applying a design storm to determine a peak flow rate. The Rational Method is one very common and well-documented method of determining peak discharge rates. Peak discharges also can be obtained by statistical analysis of past flows, unit hydrograph analysis, regional relationships or other methods. Hydrographs can be obtained from unit hydrograph analysis, synthetic hydrograph methods or the use of physically-based computer models such as the United States Soil Conservation Service TR-20 program, subsystem HYDRA in HYDRAIN, or the U.S. Army Corps of Engineers HEC-1 program.

The outflow peak discharge usually is determined by the design objectives. It may be desired to maintain outflow discharge at existing levels, at the capacity of an existing or proposed downstream structure, or at another discharge determined by local conditions. There may be a range of acceptable outflow discharges depending on the magnitude of the inflow discharge.

The basin stage-storage relationship is determined from the topography of the storage basin. The relationship is represented by a table of ponding depth in meters versus total ponding volume in cubic meters. For design of storage basins, determination of basin topography may be a trial-and-error procedure. A preliminary estimate of the total volume required can be made using the procedure described below.

The outlet stage-discharge relationship is determined from the hydraulic characteristics of the outlet. The relationship is represented by a table of

ponding depth in meters versus total outflow discharge in cubic meters per second. Determination of the outlet configuration may be a trial-and-error process. If the outfall type and dimensions are known, it can be a simple matter of a direct hydraulic analysis to determine an outlet stage-discharge relationship (performance curve).

Storage Indication Method (On-Line Basins)

The Storage Indication Method is used for routing of flow through on-line detention basins. This method is based upon the equation:

$$I - O = \frac{\Delta S}{\Delta t} \qquad \text{Equation 1}$$

where:

I	=	inflow rate, in m^3/s,
O	=	outflow rate, in m^3/s,
S	=	the change in the storage volume, in cubic meters,
Δt	=	elapsed time, in seconds.

Equation 1 states that inflow minus outflow is equal to the change in storage. The equation can be rearranged for a finite time period as:

$$\frac{(I_1 + I_2)}{2} + \left(\frac{S_1}{\Delta t} - \frac{O_1}{2}\right) = \left(\frac{S_2}{\Delta t} + \frac{O_2}{2}\right) \qquad \text{Equation 2}$$

where:

I_1	=	inflow rate at the start of the time period, in m^3/s,
I_2	=	inflow rate at the end of the time period, in m^3/s,
O_1	=	outflow rate at the start of the time period, in m^3/s,
O_2	=	outflow rate at the end of the time period, in m^3/s,
S_1	=	storage volume at the start of the time period, in cubic meters,
S_2	=	storage volume at the end of the time period, in cubic meters,
Δt	=	duration of the time period, in seconds.

This equation, in conjunction with an inflow hydrograph and the relationship between storage and outflow, can be used to route flows through a detention basin.

The Storage Indication Method is described in detail in many hydrologic texts. The application of the method in the design of on-line detention basins for which the outflow discharge is known is described below. It is assumed that an inflow hydrograph is available prior to beginning the procedure.

Step 1 ***Preliminary Volume Estimate.*** A preliminary estimate of the storage volume can be made by superimposing an assumed outflow hydrograph on the inflow hydrograph as shown in Figure 1 and estimating the volume represented by the difference between the two up to the time that inflow equals outflow. This volume is shown labeled as "storage" on Figure 1. The outflow hydrograph is assumed to begin at the same time as the inflow hydrograph, and peak at a point on the falling limb of the inflow hydrograph.

If the inflow and outflow hydrographs are triangular as shown in Figure 1, the preliminary volume estimate can be represented by:

$$V_s = V_i \left[1 - \left(\frac{O_p}{I_p} \right) \right] \qquad \text{Equation 3}$$

where:

V_S = estimate of required storage volume, in cubic meters,

V_i = total inflow volume, in cubic meters,

O_p = peak outflow rate, in m^3/s,

I_p = peak inflow rate, in m^3/s.

Step 2 Prepare a preliminary detention basin configuration based upon the preliminary volume estimate. Develop a stage-storage relationship for the assumed basin configuration.

Step 3 Choose an initial outflow configuration based on engineering judgment and develop a stage-outflow relationship. The stage-outflow relationship can be estimated using mathematical equations for orifice or weir flow, or approximated from Federal Highway Administration (FHWA) nomographs for culvert design (FHWA Hydraulic Design Series #5).

Step 4 The common parameter in the stage-storage (step 2) and stage-outflow relationships (step 3) is stage. Therefore, merge the two relationships to construct a storage-outflow relationship.

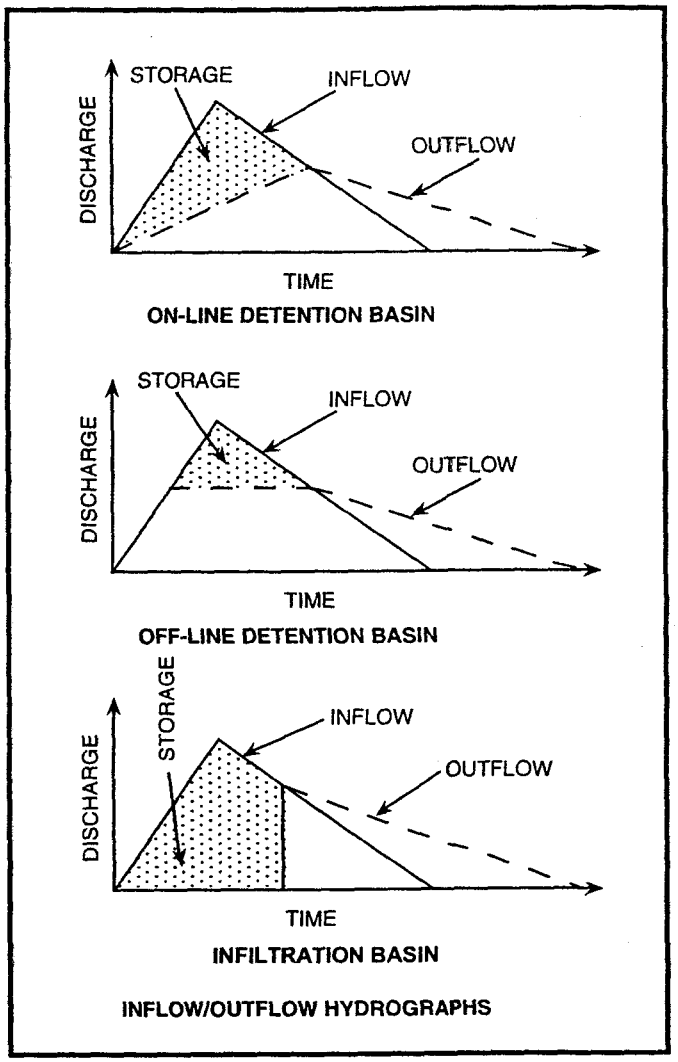

Figure 1

Note: For water quality purposes and to capture the "first-flush", an off-line detention basin would be configured to have and inflow-outflow hydrograph similar to the one shown for an infiltration basin.

Step 5 Select a routing time interval (Δt). For the initial estimate and for convenience, this value may be one tenth of the rise time of the inflow hydrograph. The inflow hydrograph will be "discretized" using this time increment.

Step 6 Using the storage-outflow relationship and the chosen time interval, establish a relationship between outflow (O) and the quantity $[(S/\Delta t) + (O/2)]$ in Equation 2. Prepare a working table and working curve of this relationship. It may be convenient to plot the working curve on

logarithmic graph paper due to the wide range of values that generally must be represented.

An "equal-values" line refers to the locus of points on the working curve where $[(S/\Delta t) + (O/2)]$ equals the outflow (O). Check the working curve to ensure that it does not exceed the "equal-values" line at any point on the curve. If it does exceed the "equal-values" line, the routing time interval Δt, is too large. Reduce the routing time and repeat Steps 5 and 6. A small routing time is not a particular problem if computer calculations are to be made. The interest in having a larger time step (up to about one-tenth of the time to rise on the inflow hydrograph) is to minimize manual calculations.

Step 7 Perform the routing by computing outflow for each time step from Equation 2 and the relationship between outflow and $[(S/\Delta t) + (O/2)]$. A routing tabulation is useful to track the routing computations. For convenience, the routing table should have columns for:

- the time steps;
- the inflow hydrograph;
- the quantity $[(S/\Delta t) - (O/2)]$;
- the quantity $[(S/\Delta t) + (O/2)]$; and
- outflow.

Reservoir stage and storage volume could be included in the table, but they are not necessary to the routing computations.

The routing procedure is as follows: (Subscript 1 represents a value for the previous time step and subscript 2 represents a value for the current time step.)

Steps 1 through 7 are graphically illustrated by the flowchart shown as Figure 2.

Step 8 As the final step, a graphical representation of the inflow and outflow hydrographs should be prepared.

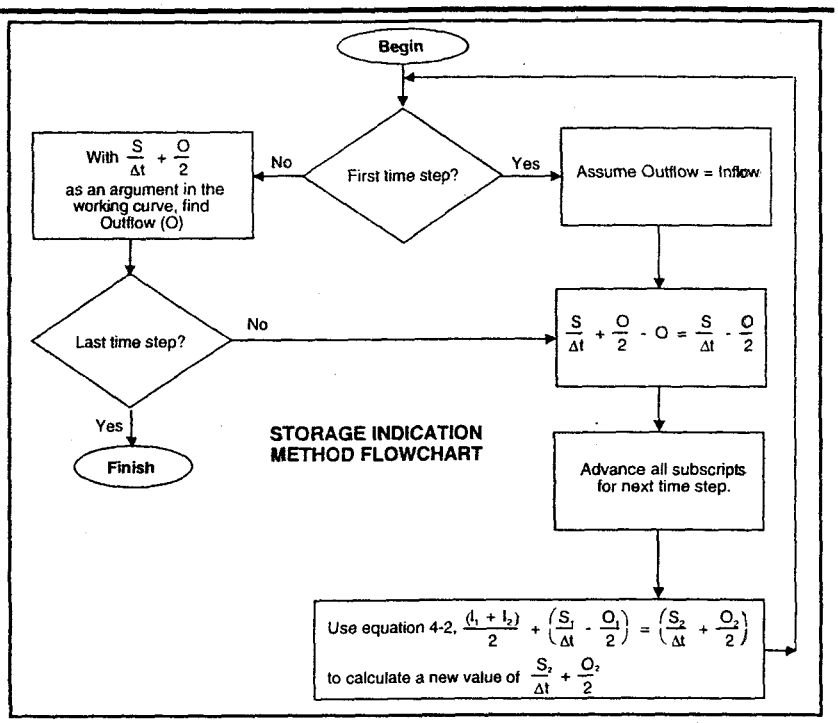

Figure 2

- Detention Time: Detention basins require longer detention times to provide the opportunity for sediment particles in the runoff to settle out of the water column. Detention facility studies indicate that effective detention basins should be designed for a detention time of 24 hours for average conditions rather than full-basin conditions. In California, a 24-hour average detention time for the full range of storms up to and including the water quality design storm (determined from Table 1) is generally achieved with a full-basin drawdown time of at least 40 hours, where the drawdown time is the time required for a full basin to empty. The maximum design goal is to achieve a 48-hour drawdown for a full basin. Detention times longer than 48 hours should not be considered to minimize the potential for mosquito breeding.

  The design analysis must then be scheduled to determine if the facility takes at least 24 hours to drain when half full. For basins sized to capture the treatment design storm event, an outlet sized to draw down the basin in 48 hours will very likely result in detention times of less than 24 hours for the half full condition and smaller storms. For such conditions, a two-step outlet should be designed. It is recommended that the lower outlet be sized to drain the water quality volume in 40 hours. The second outlet is placed at the mid-water elevation and is sized in combination with the lower orifice to drain the entire facility in 48 hours. Another approach is to install the outlet about 300 mm (12 in) above the bottom of the pond (essentially enlarging the micropool area). This lower area will normally dry up

between storms and will capture much of the volume of small storms, improving pollutant removal (see Figure 3).

Detention basins shall have three discharge stages. They are:

(1) the Water Quality Volume,

(2) the primary flood control outlet, and

(3) a secondary outlet to limit the risk of overtopping the device.

- Basin Geometry: The configuration of the basin, as well as the location of the associated facilities (inlet, outlet structures, baffles, etc.), will significantly impact the desired function of the basin. In order to enhance pollutant removal, the hydraulic flow length of the basin should be maximized. Typically the length to width ratio of the basin should be on the order of 3:1 or greater. Typical pond depths range from 1.2 m (4 ft) to 1.8 m (6 ft). Figure 3 is an idealized detention basin layout.

- Basin Side Slopes: Embankment slopes should be stable and gentle enough to limit rill erosion and facilitate maintenance access and needs. Although limited by the stability of the soil, typically, basin slopes should be 1:4 (V:H) or flatter. Steeper slopes may require that the facility be fenced for safety. Embankment slopes should be compacted and stabilization of slopes provided to assist in preventing erosion. Height limitations should be in accordance with the Highway Design Manual, Index 829.9.

- Basin sizes, volumes and berm/dam heights must be in conformance with the Division of Dam Safety requirements.

- Inlets: Inlet structures should be designed to dissipate flow energy at the inlet point to limit erosion and promote particle sedimentation. They should be located as far as possible from the outlet structure to maximize the hydraulic flow length. A forebay, designed upstream of the basin, can be provided to remove large particles.

- Invert Depth to Groundwater: Detention devices should have an impermeable liner at locations where the invert to seasonally high (wet weather) groundwater separation is less than 1.5 meters. This will reduce maintenance access problems and minimize establishment of wetland plant species.

- Aesthetics: The aesthetics of the site are also a consideration. Vegetation should be selected carefully to enhance the appearance of the basins. If a detention pond is designed to empty completely following a rainfall event, appropriate ground cover should be provided.

- Maintenance Considerations: Maintenance procedures should also be considered during the planning stages. Basins should be located such that safe and easy access for maintenance is provided. Debris in empty basins may be unsightly and require more frequent maintenance. In some areas, mosquitoes and other insects may require additional maintenance.

- Safety: Safety is a major consideration when planning detention basins. Basins should be located where failure would not cause loss of life or property damage. Basins which maintain either temporary or permanent pools of water should be fenced to limit public access. The size of the basins may require approval from the State Division of Safety of Dams.

Basin Outlet Guidance

Proper hydraulic design of the outlet is critical to achieving good performance of the detention basin. The two most common outlet problems that occur are: (1) the capacity of the outlet is too great resulting in only partial filling of the basin and drawdown time less than designed for; and (2) the outlet clogs because it is not adequately protected against trash and debris. To avoid these problems, the following outlet types are recommended for use: (1) a single orifice outlet with or without the protection of a riser pipe, and (2) perforated riser. A V-notch weir can also be used, but is not recommended. The V-notch weir will not clog, but it is difficult to maintain small release rates at low heads. The perforated riser, if properly designed and gravel packed, gives much better control and is recommended over the V-notch weir. Design guidance for single orifice and perforated riser outlets follow:

Flow Control Using a Single Orifice: The outlet control orifice should be sized using the following equation:

$$a = \frac{2A(H - Ho)^{0.5}}{3600CT(2g)^{0.5}} = \frac{(7x10^{-5})A(H - Ho)^{0.5}}{CT}$$

where:
- a = area of orifice (ft^2) (1 ft^2 = 0.0929m^2)
- A = average surface area of the pond (ft^2)
- C = orifice coefficient
- T = drawdown time of full pond (hrs.)
- G = gravity (32.2 ft./s^2)
- H = elevation when the pond is full (ft)
- Ho = final elevation when pond is empty (ft)

With a drawdown time of 40 hours, the equation becomes:

$$a = \frac{(1.75x10^{-6})A(H - Ho)^{0.5}}{C}$$

Assuming an average release rate at one half the pond depth, (a common approach in several design manuals) may lead to considerable error if the pond has a significant variation of surface area with depth which may result in basins with relatively small areas and sideslopes less than 1:3. If this is true, do not use Equation (2); consult HEC-22 for the design of detention facilities.

Care must be taken in the selection of "C"; 0.60 is most often recommended and used. However, based on actual tests, GKY (1989), "Outlet Hydraulics of Extended Detention Facilities for Northern Virginia Planning District Commission" recommends the following:

C = 0.66 for thin materials; where the thickness is equal to or less than the orifice diameter

C = 0.80 when the material is thicker than the orifice diameter

Drilling the orifice into an outlet structure that is made of concrete can result in considerable impact on the coefficient, as does the beveling of the edge.

Three alternative outlet structures that use single orifice outlets are suggested (Figures 4, 5 and 6). The concrete block structure is appropriate for large ponds. The riser pipe is suggested for small to large ponds to prevent orifice clogging. Hole size and placement is not critical in this case because the orifice will control the discharge rate. Placing the outlet control in the berm or in a manhole located downstream of the facility is most suitable for small ponds as along as other outlets/spillways are provided for storms larger than the water quality design storm. For small facilities, place the control orifice in the outlet manhole downstream of the filter as shown in Figure 5, Riser Pipe; or use a "T-pipe" as shown in Figure 6, Control Manhole, to submerge the orifice.

Flow Control Using the Perforated Riser: For outlet control using the perforated riser as the outflow control. This design incorporates flow control for the small storms in the perforated riser but also, provides an overflow outlet for large storms. If properly designed, the facility can be used for both water quality and drainage control by: (1) sizing the perforated riser as indicated for water quality control; (2) sizing the outlet pipe to control peak outflow rate from the 2-year storm; and (3) using a spillway in the pond berm to control the discharge from larger storms up to the 100-year storm.

Recommendations regarding the design of a perforated riser pipe are shown in Table 1. To prevent clogging of the bottom orifices of the riser pipe, wrap the bottom three rows of orifices with filter fabric per Section 88 of Standard Specifications and a cone of 25 mm (1 in) to 75 mm (3 in) rock.

Special Construction Considerations

During construction of detention basins it is important to keep the following in mind:

- Sediment should be removed from temporary basins which are to be used for permanent detention basins.
- Temporary BMPs including sediment basins and traps, diversion channels and dikes, should be maintained until permanent BMPs are complete and operable.
- The fill material used in embankments should be compacted to at least 95% of the maximum density obtained form compaction tests performed by the Modified Proctor method of ASTM D698.
- Seepage through embankments may cause embankment failure. Consideration must be given to permeability of embankments.

Maintenance and Inspection

- Vegetation should be maintained as needed including periodic removal of aquatic plants that may potentially impact nutrients in the water.
- Vector controls should be implemented as needed. Varying water depths every few days may help control some vectors.

References

- Urban Drainage Design Manual, Hydraulic Engineering Circular No. 22 – HEC22, U.S. Department of Transportation, Federal Highway Administration, 1996. Publication No. FHWA-SA-96-078
- Retention, Detention and Overland Flow for Pollutant Removal from Highway Stormwater Runoff. Volume 2. Design Guidelines. U.S. Department of Transportation, Federal Highway Administration, 1996. Publication No. FHWA-SA-96-096.
- Urban Runoff Quality Management, ASCE/WEF, 1998
- Caltrans Highway Design Manual, Chapter 810.

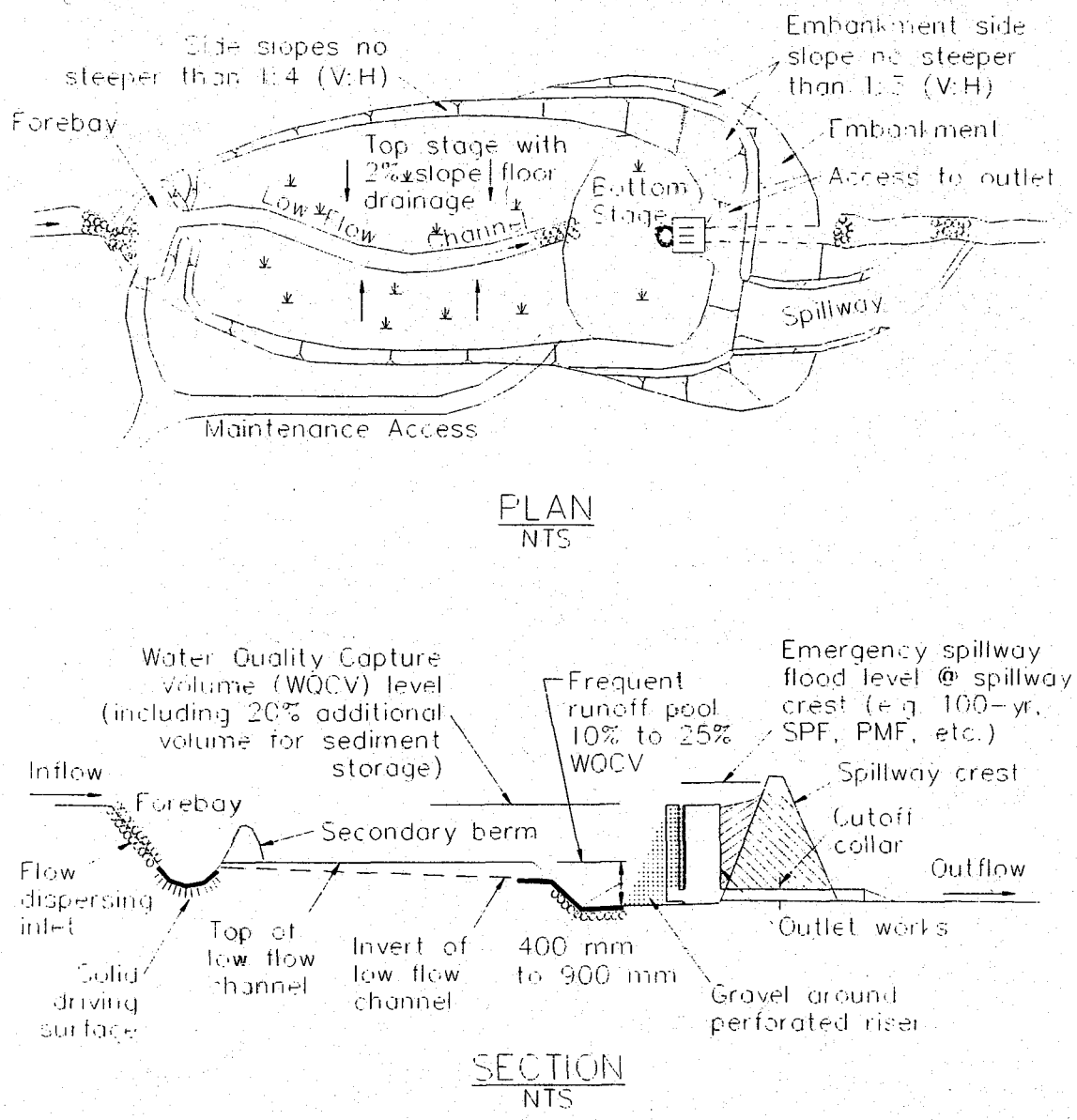

Adapted from: Urban Drainage, 1992

Figure 3- Detention Basin Schematic

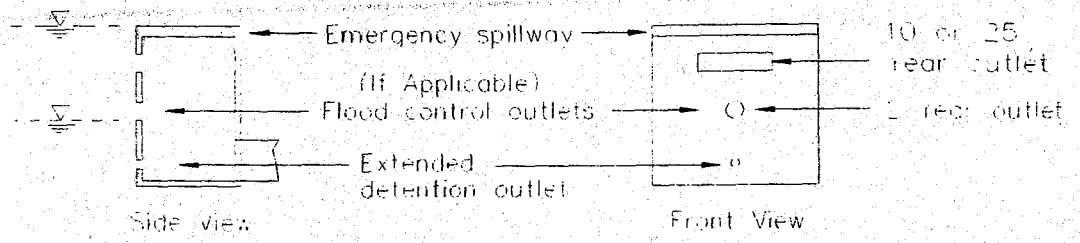

CONCRETE STRUCTURE
NOT TO SCALE

Figure 4

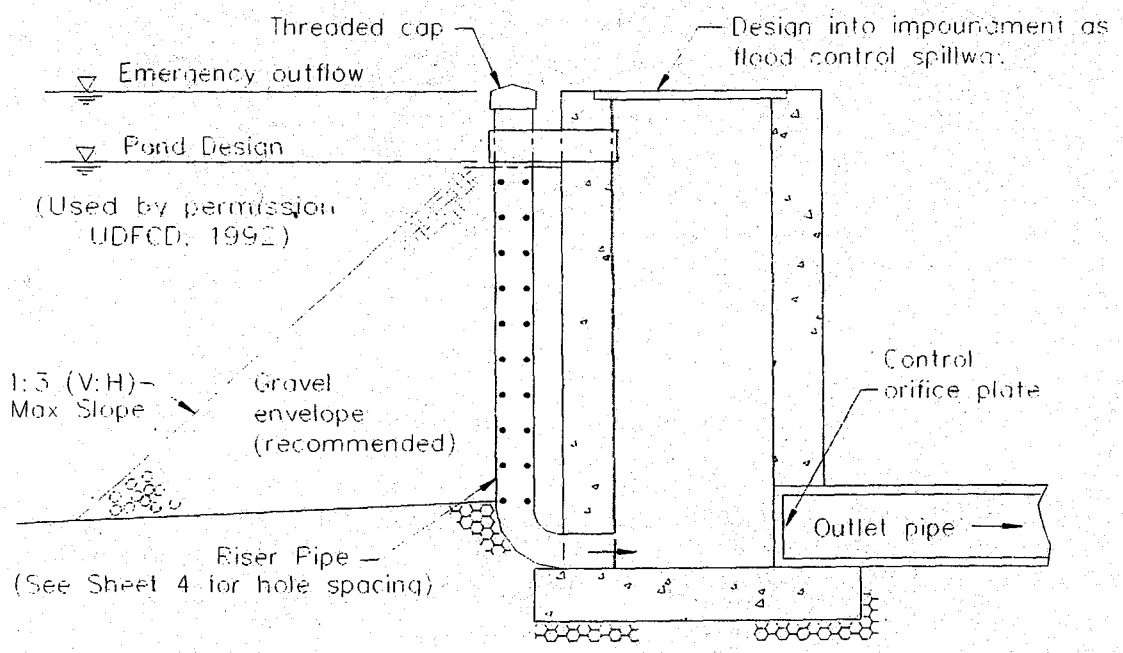

RISER PIPE
NOT TO SCALE

Figure 5

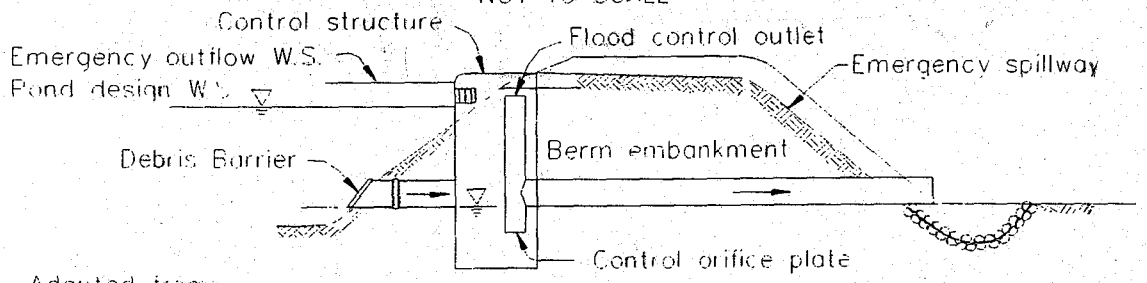

Adapted from:
Douglas County, CO

CONTROL MANHOLE
NOT TO SCALE

Figure 6

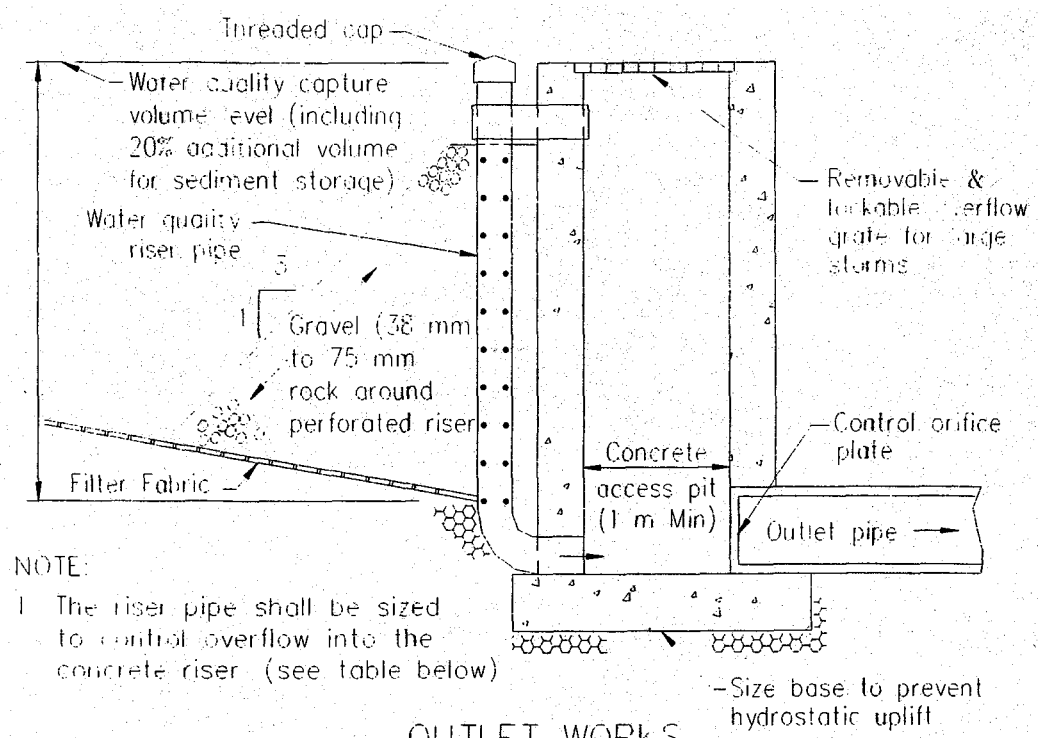

NOTE:

1 The riser pipe shall be sized to control overflow into the concrete riser (see table below)

OUTLET WORKS

NOT TO SCALE

Figure 7

Perforated Outlet Riser Pipe Orifices (Austin, 1988)			
Riser Pipe Diameter	Vertical Spacing Between Rows (center to center)	Number of Perforations	Perforation Diameter
150 mm	64 mm	9 per row	25 mm
200 mm	64 mm	12 per row	25 mm
250 mm	64 mm	16 per row	25 mm

Table 1

1.1 OVERVIEW

These Statewide Storm Water Quality Practice Guidelines (Guidelines) provide a description of each approved Best Management Practice (BMP) included in the Statewide Storm Water Management Plan (SWMP) for statewide application.

This appendix is intended to provide Caltrans staff with details of the implementation expectations associated with each approved storm water management practice or BMP. These implementation details will be subsequently incorporated into various specifications, policy manuals, employee handbooks and/or training materials. In almost all cases, the BMPs will be subdivided and regrouped to focus on specific target audiences.

This compilation of details within one document is seen as appropriate for facilitating productive dialog with regulators and other interested parties.

Caltrans anticipates frequent updates/revisions to this appendix. These updates will be accomplished in consultation with the State Water Resources Control Board (SWRCB) staff.

The Guidelines are organized as follows:

- Section 2 describes the Maintenance BMPs (Category IA);
- Section 3 describes the Design Pollution Prevention BMPs (Category IB);
- Section 4 describes the Construction Site BMPs (Category II); and
- Section 5 describes Treatment BMPs (Category III)

These Guidelines were prepared in August 2000, prior to the revisions made to the SWMP by the SWRCB in November 2000. Except as otherwise noted in the SWMP, these Guidelines will be revised within 90-days after approval of the revised SWMP to address all the changes made by the SWRCB to the SWMP and subject to the approval of the Executive Director.

2.1 MAINTENANCE BMPs (CATEGORY IA)

This section describes those BMPs that are to be incorporated into the indicated maintenance activities during highway maintenance activities and during activities conducted at maintenance facilities. The maintenance activities are grouped into general families for deployment and training purposes. For each activity, this section provides a general description, appropriate applications and implementation details.

This section addresses BMPs for the following families of maintenance activities:

- A Family (Flexible Pavement)
- B Family (Rigid Pavement)
- C Family (Slopes/Drainage/Vegetation)
- D Family (Litter/Debris/Graffiti)
- E Family (Landscaping)
- H Family (Bridges)
- J Family (Other Structures)
- K Family (Electrical)
- M Family (Traffic Guidance)
- R Family (Snow and Ice Control)
- S Family (Storm Maintenance)
- T Family (Management and Support)

The maintenance BMPs are listed in Table 2-1.

TABLE 2-1: MAINTENANCE BMPs

General and Activity BMPs	Page
Cleaning[1]	2-4
Safer Alternative Products[1]	2-4
Protection of Drainage Paths, Drain Inlets and Watercourses[1]	2-5
Maintenance Facility Housekeeping Practices[1]	2-6
Solid and Liquid Waste Management[1]	2-6
Perform Work in Dry Weather[1]	2-7
Crack and Joint Repair (A1)	2-7
Asphalt Work (A2)	2-8
Pothole Repairs (A4)	2-9
Pavement Grinding and Removal (A9)	2-9
Concrete Work (B2)	2-10
Mudjacking (B9)	2-10
Lateral Support (Roadway Shoulder Maintenance (C1)	2-11
Baseline Storm Water Drainage Facilities Inspection and Cleaning (C1a)	2-12
Enhanced Storm Drain Inlet Inspection and Cleaning Program (C1b)	2-13
Treatment System Maintenance (C5)	2-13
Traction Sand Trap Device Maintenance (C7)	2-17
Illicit Connection Detection, Reporting, and Removal (C9)	2-18
Illegal Discharge Control (D2)	2-19
Sweeping Operations (D3)	2-20
Litter and Debris Removal (D4a)	2-21
Anti-Litter Signs (D4b)	2-21
Emergency Response and Cleanup Practices (D5a)	2-22
Graffiti Removal (D6)	2-23
Chemical Vegetation Control (E1a)	2-24
Mechanical Vegetation Control/Mowing (E1b)	2-25
Tree and Shrub Pruning (E2a)	2-25
Tree and Shrub Removal (E2b)	2-26
Water Line Repairs (E3a)	2-27
Irrigation (Watering), Potable and Nonpotable (E3b)	2-27
Erosion Control (E9)	2-28
Vegetated Surfaces (E11)	2-28
Welding and Grinding (H2)	2-29
Sand Blasting, Wet Blast with Sand Injection and Hydroblasting (H7a)	2-30
Painting (H7b)	2-31

TABLE 2-1: MAINTENANCE BMPs

General and Activity BMPs	Page
Bridge Repairs (H9a)	2-31
Draw Bridge Maintenance (H9b)	2-32
Pump Station Cleaning (J1)	2-33
Saw Cutting (K6)	2-34
Thermoplastic Striping and Preheaters (M1a)	2-35
Paint Striping and Markings (M1b)	2-35
Raised/Recessed Pavement Marker Application and Removal (M3a)	2-36
Thermoplastic Grinding and Removal (M3b)	2-37
Median Barrier Repair (M7)	2-37
Vehicle Energy Attenuators (M8)	2-38
Snow and Ice Control (R1)	2-39
Minor Slides and Slip-Outs (S3)	2-40
Building and Grounds Maintenance (T5b)	2-41
Storage of Hazardous Materials (Working Stock) (T7a)	2-42
Material Storage Controls (Hazardous Waste) (T7c)	2-44
Outdoor Storage of Raw Materials (T7d)	2-44
Vehicle and Equipment Fueling (T9a)	2-45
Vehicle and Equipment Pressure Washing (T9b)	2-46
Vehicle and Equipment Maintenance and Repair (T9c)	2-47
Aboveground and Underground Tank Leak and Spill Control (T9d)	2-48
Storm Drain Stenciling (T10)	2-49

1 General BMPs

2.2 GENERAL BMPS

The general BMPs described in this section apply to a majority of the maintenance activities performed by Caltrans.

2.2.1 Cleaning

Description:

Maintenance personnel routinely clean equipment and facilities. This BMP is intended to reduce the potential for discharging to storm drainage systems during cleaning activities. Solid and liquid wastes generated during maintenance activities must be properly disposed to minimize or eliminate the exposure of waste material to runoff.

Appropriate Applications:

This BMP is applicable to all equipment and facility cleaning activities.

BMP Implementation:

- Dry methods of cleaning are preferred (sweeping, dry absorbents, rags, etc.).
- If wet methods are necessary, water use will be minimized.
- Any liquid generated must be contained.
- Locate washout areas away from drainage paths, drain inlets or watercourses.

2.2.2 Safer Alternative Products

Description:

A variety of products that may be harmful to the environment if they come into contact with surface waters are used in maintenance facilities and activities. In some cases, a harmful product may be replaced by a less harmful product that serves the same purpose. The less harmful product is referred to as a safer alternative product. The primary purpose of using safer alternative products is to reduce the potential for the discharge of toxic products to drainage paths, storm water drainage systems or watercourses. Safer alternative products should be considered for all maintenance activities.

Appropriate Applications:

Safer alternative products should be considered for all maintenance activities. For example, when safer alternative products exist for cleaning products, paints, herbicides, automotive products and fertilizers, they should be used where practical and effective. Alternative products may not be available, effective or cost-effective in every situation.

BMP Implementation:

- Use training to create awareness among employees regarding the use of safer alternative products.
- The use of safer alternative products can still result in the discharge of harmful materials to drainage paths, storm water drainage systems or watercourses. Use safer alternative products in strict accordance with manufacturers' recommendations.

2.2.3 Protection of Drainage Paths, Drain Inlets and Watercourses

Description:

Consideration must be given to the protection of drainage paths, drain inlets and watercourses during maintenance activities. Section 5.4.3 of the Statewide SWMP identifies all permitted and exempt non-storm water discharges through Caltrans storm water drainage systems. All other discharges are prohibited.

Appropriate Applications:

The protection of drainage paths, drain inlets and watercourses needs to be considered during asphalt work, graffiti removal, landscaping, welding and grinding, blasting, painting, pump station cleaning, traffic guidance, storm maintenance and any other activities where applicable to prevent non-storm water discharges.

BMP Implementation:

- Storm drain inlets should be covered or otherwise protected during the applicable maintenance activities.
- Stockpiles should not be placed in drainage paths during the rainy season. Stockpiles should never be placed adjacent to drain inlets and must be completely removed from likely drainage paths prior to the rainy season.
- Do not fuel equipment next to drainage paths or drain inlets.
- Do not transfer or load chemicals into equipment next to watercourses or drain inlets.
- Make sure equipment shutoff valves are functioning properly to avoid discharges to drainage paths or drain inlets.
- When using conventional spray equipment, monitor weather and wind direction to ensure that paint, pesticides or other chemicals are not entering drain inlets, drainage paths, drainage systems or watercourses.
- Section 9.3 of the Statewide SWMP identifies the reporting requirements that must be followed in the event of a nonpermitted non-storm water discharge.

2.2.4 Maintenance Facility Housekeeping Practices

Description:

Daily activities occurring at maintenance facilities often involve the use of materials and products that are potentially harmful to the environment. Good housekeeping practices are intended to reduce the potential for discharge of pollutants to drainage paths, storm water drainage systems or watercourses by promoting efficient and safe storage, use and cleanup of potentially harmful materials.

Appropriate Applications:

Proper housekeeping practices apply to all maintenance personnel who participate in activities that have the potential to generate materials that can be discharged to storm water drainage systems or watercourses.

BMP Implementation:

- Sweep or vacuum maintenance facility floors and pavement.
- If mopping is used to clean floors or pavement, contain the mop water and dispose it to the sanitary sewer system following these guidelines:
  - Remove any spilled oil or other liquids using dry sweep or rags.
  - Do not dispose mop water into the parking lot, street, gutter or drain inlet.
  - If an oil/water separator is available, pour the mop water into the separator so that the wastewater is treated before being discharged to the sanitary sewer system.
- Use drip pans or absorbent material under leaking vehicles and equipment to capture fluids.
- If hosing is needed all runoff will be contained. Ensure that wash water is not discharged to the storm drain system.

2.2.5 Solid and Liquid Waste Management

Description:

Solid and liquid wastes generated during maintenance activities must be disposed of to minimize or eliminate the exposure of waste material to runoff.

Appropriate Applications:

All solid and liquid wastes (hazardous and nonhazardous) should be addressed.

BMP Implementation:

- Contain paint, grindings, blasting grit, and other waste materials.
- Remove waste by mechanical or manual methods.
- Wastes must be placed into appropriate containers.
- Cover loads if necessary during transport.
- Solid and liquid wastes must be disposed of in accordance with federal, state and local requirements.

2.2.6 Perform Work in Dry Weather

Description:

Maintenance activities are performed in dry weather to minimize impacts to water quality; however, conditions may exist which require these activities be conducted in wet weather.

Appropriate Applications:

Applies to all non-emergency outdoor activities.

BMP Implementation:

- Maintain facilities and perform repairs in dry weather.

2.3 A FAMILY (FLEXIBLE PAVEMENT)

The general objectives of flexible pavement (asphalt) maintenance activities are to provide safety, to preserve the state's capital investment, and to maintain a riding quality satisfactory to the traveling public. Road surface maintenance typically involves the use of asphalt and other materials to create impervious surface areas or to repair existing road surfaces. Pollution control activities focus on ensuring that excess materials and hazardous materials remain controlled and are not released to the environment.

Crack and Joint Repair (A1)

Description:

The BMPs for this activity (see "BMP Implementation" below) are intended to reduce the potential for the discharge of potential pollutants generated during crack and joint repair. Crack and joint repair involves the sealing and filling of cracks and joints in flexible

pavement. This work is done to prevent the entrance of moisture and foreign material into the subgrade, and to maintain the integrity of the pavement surface.

Appropriate Applications:

These BMPs should be implemented on a site-specific basis whenever crack and joint repair activities are performed.

BMP Implementation:

- See Cleaning (Section 2.2.1).
- See Safer Alternative Products (Section 2.2.2).
- See Protection of Drainage Paths, Drain Inlets and Watercourses (Section 2.2.3).
- See Solid and Liquid Waste Management (Section 2.2.5).
- See Perform Work in Dry Weather (Section 2.2.6)
- Avoid applying excess sealant material.

Asphalt Work (A2)

Description:

The BMPs for this activity (see "BMP Implementation" below) are intended to reduce the potential for the discharge of potential pollutants generated during asphalt work. Asphalt work involves the patching or resurfacing of the roadbed with a mixture of mineral aggregate and asphalt concrete binder. The purpose is to repair degraded asphalt surfaces or to cover a new road with asphalt pavement.

Appropriate Applications:

These BMPs should be implemented on a site-specific basis whenever asphalt work activities are performed.

BMP Implementation:

- See Cleaning (Section 2.2.1).
- See Safer Alternative Products (Section 2.2.2).
- See Protection of Drainage Paths, Drain Inlets and Watercourses (Section 2.2.3).
- See Solid Waste and Liquid Waste Management (Section 2.2.5).
- See Perform Work in Dry Weather (Section 2.2.6).

Pothole Repairs (A4)

Description:

The BMPs for this activity (see "BMP Implementation" below) are intended to reduce the potential for the discharge of potential pollutants generated during pothole repairs. Pothole repairs involve the filling and resurfacing of potholes along the flexible pavement portions of roadways and highways. The purpose of these repairs is to eliminate holes and cuts in the pavement.

Appropriate Applications:

These BMPs should be implemented on a site-specific basis whenever pothole repair activities are performed. Refer to Saw Cutting (K6) where saw cutting is used.

BMP Implementation:

- See Cleaning (Section 2.2.1).
- See Safer Alternative Products (Section 2.2.2).
- See Solid Waste and Liquid Waste Management (Section 2.2.5).
- See Perform Work in Dry Weather (Section 2.2.6).

Pavement Grinding and Removal (A9)

Description:

The BMPs for this activity (see "BMP Implementation" below) are intended to reduce the potential for the discharge of potential pollutants generated during pavement grinding and removal. During resurfacing activities sections of roadway are removed (dug out) using graders and grinders.

Appropriate Applications:

These BMPs should be implemented on a site-specific basis whenever pavement grinding and removal activities are performed.

BMP Implementation:

- See Cleaning (Section 2.2.1).
- See Safer Alternative Products (Section 2.2.2).
- See Protection of Drainage Path, Drain Inlets and Watercourses (Section 2.2.3).

- See Solid Waste and Liquid Waste Management (Section 2.2.5).
- See Perform Work in Dry Weather (Section 2.2.6).

2.4 B FAMILY (RIGID PAVEMENT)

The general objectives of rigid pavement maintenance activities are to provide safety, to preserve the state's capital investment and to maintain a riding quality satisfactory to the traveling public. Road surface maintenance typically involves the use of concrete and other materials to create impervious surface areas or to repair existing road surfaces. Pollution control activities focus on ensuring that excess materials and hazardous materials remain controlled and are not released to the environment.

Concrete Work (B2)

Description:

The BMPs for this activity (see "BMP Implementation" below) are intended to reduce the potential for the discharge of potential pollutants generated during concrete work. Concrete work procedures and practices are designed to reduce the discharge of concrete waste materials (e.g., concrete grindings and cuttings, concrete rinse water, and concrete waste) to drainage paths, the drainage system or to watercourses by implementing rinsing procedures and disposal practices.

Appropriate Applications:

These BMPs should be implemented on a site-specific basis whenever concrete work activities are performed.

BMP Implementation:

- See Cleaning (Section 2.2.1).
- See Safer Alternative Products (Section 2.2.2).
- See Protection of Drainage Pathways, Drain Inlets and Watercourses (Section 2.2.3).
- See Solid Waste and Liquid Waste Management (Section 2.2.5).
- See Perform Work in Dry Weather (Section 2.2.6).

Mudjacking (B9)

Description:

The BMPs for this activity (see "BMP Implementation" below) are intended to reduce the potential for the discharge of potential pollutants generated during mudjacking.

Mudjacking is the maintenance and repair of rigid-type surfacing, its associated base and any Portland concrete cement shoulders less than 2 feet in width.

Appropriate Applications:

These BMPs should be implemented on a site-specific basis whenever mudjacking activities are performed.

BMP Implementation:

- See Cleaning (Section 2.2.1).
- See Safer Alternative Products (Section 2.2.2).
- See Protection of Drainage Paths, Drain Inlets and Watercourses (Section 2.2.3).
- See Solid Waste and Liquid Waste Management (Section 2.2.5).
- See Perform Work in Dry Weather (Section 2.2.6).

2.5 C FAMILY (SLOPES/DRAINAGE/VEGETATION)

The C Family maintenance activities include repair, replacement, and clearing of channels, ditches, culverts, underdrains, horizontal drains, and other elements of storm water drainage systems. Protective measures such as soil stabilization using vegetation or rock on stream banks, benches, or ditches are also part of the C Family maintenance activities. The C Family maintains permanent treatment BMPs and also implements procedures for detecting, correcting, and reporting illicit connections and associated discharges into Caltrans storm water drainage system.

Lateral Support (Roadway Shoulder Maintenance) (C1)

Description:

The BMPs for this activity (see "BMP Implementation" below) are intended to reduce the potential for the discharge of potential pollutants generated during roadway shoulder maintenance. Areas adjacent to surfaced and unsurfaced road shoulders require maintenance to prevent the loss of lateral support, the deterioration or failure of the edge of road surfaces, and to maintain roadside drainage patterns.

Appropriate Applications:

These BMPs should be implemented on a site-specific basis whenever lateral support (roadway shoulder maintenance) activities are performed.

BMP Implementation:

- See Cleaning (Section 2.2.1).
- See Safer Alternative Products (Section 2.2.2).
- See Protection of Drainage Paths, Drain Inlets and Watercourses (Section 2.2.3).
- See Perform Work in Dry Weather (Section 2.2.6).
- Areas outside the fire control strip that are disturbed by maintenance activities will be re-vegetated if originally vegetated or stabilized to prevent erosion.

Baseline Storm Water Drainage Facilities Inspection and Cleaning (C1a)

Description:

Culverts, ditches and gutters, underdrains, horizontal drains and downdrains require inspection and cleaning to prevent flooding and to provide for unobstructed flows.

Appropriate Applications:

These procedures are applicable to the maintenance personnel who conduct storm water drainage system facilities inspection and cleaning. BMP implementation will depend on traffic, weather, available resources, safety conditions and access to storm water drainage systems. Baseline inspection and cleaning will be reported annually by county, route and postmile. Illicit connections and illegal discharges will be reported per Illicit Connection, Reporting and Removal (C9) and Illegal Discharge Control (D2).

BMP Implementation:

- See Cleaning (Section 2.2.1).
- Observe culverts and drain inlets and outlets annually in the fall, and as needed during the winter season to determine if cleaning is required or if damage has occurred.
- Clean culverts when sediment accumulation impairs the culvert function.
- Inspect ditches and gutters periodically to maintain unobstructed flow. Schedule routine ditch-cleaning activities designed to maintain the hydraulic capacity of ditches prior to the rainy season. Seal or repair when structural integrity is directly endangered.
- Inspect downdrains once a year and clean or repair as necessary.
- When cleaning drainage ditches below cut slopes or steep slopes, avoid cutting the toe of the slope. This can also prevent damage to the ditch.
- See Protection of Drainage Paths, Drain Inlets and Watercourses (Section 2.2.3).
- See Solid Waste and Liquid Waste Management (Section 2.2.5).

- See Perform Work in Dry Weather (Section 2.2.6).
- Report damaged drainage facilities to the appropriate Maintenance Supervisor and schedule repair as needed.

Enhanced Storm Drain Inlet Inspection and Cleaning Program (C1b)

Description:

Caltrans will implement an annual drain inlet inspection and cleaning program in the metropolitan areas of San Diego, Orange, Los Angeles and Ventura Counties.

Appropriate Applications:

Within the target counties an annual inspection and cleaning program will be implemented. This program will not address left shoulder, median, or ramp inlets that require lane closures for access. Right shoulder inlets and other inlets that do not require lane closures will be inspected. Inspection and cleaning activities will be reported annually by county, route and postmile.

BMP Implementation:

- See Cleaning (Section 2.2.1).
- Inspect drain inlets annually to determine if cleaning is required or if damage has occurred.
- Clean inlets with 12 inches or more of accumulated material.
- See Protection of Drainage Paths, Drain Inlets and Watercourses (Section 2.2.3).
- See Perform Work in Dry Weather (Section 2.2.6).
- Maintain records and a database of inspection and cleaning information.

Treatment System Maintenance (C5)

Biofiltration Swales

Description:

These measures are intended to maintain the swale as an effective device for treating runoff discharges. These requirements for regular inspection and maintenance will allow the devices to continue to function as designed for water quality purposes.

Appropriate Application:

The maintenance activities described apply to personnel who inspect and maintain vegetative controls.

Implementation:

- Biofiltration swales will be maintained according to Section 2.7, E Family (Landscaping).
- See Cleaning (Section 2.2.1).
- See Protection of Drainage Paths, Drain Inlets and Watercourses (Section 2.2.3).
- See Perform Work in Dry Weather (Section 2.2.6).

Biofiltration Strips

Description:

These measures are intended to maintain the biofiltration strip as an effective device for treating runoff discharges. These requirements for regular inspection and maintenance will allow the devices to continue to function as designed for water quality purposes.

Appropriate Application:

The maintenance activities described apply to personnel who inspect and maintain vegetative controls.

Implementation:

- Biofiltration strips will be maintained according to Section 2.7, E Family (Landscaping).
- See Cleaning (Section 2.2.1).
- See Protection of Drainage Paths, Drain Inlets and Watercourses (Section 2.2.3).
- See Perform Work in Dry Weather (Section 2.2.6).

Infiltration Basin Maintenance

Description:

This BMP is intended to maintain the infiltration basin as an effective device for treating runoff discharges. These requirements for regular inspection and maintenance will allow the devices to continue to function as designed for water quality purposes.

Appropriate Applications:

The maintenance activities described in Table 2-2 apply to personnel who inspect and maintain infiltration devices.

Implementation:

- See Cleaning (Section 2.2.1).
- See Protection of Drainage Paths, Drain Inlets and Watercourses (Section 2.2.3).
- See Perform Work in Dry Weather (Section 2.2.6).
- Field measurements of maintenance indicators are made by visual observation.

TABLE 2-2: INFILTRATION BASIN MAINTENANCE

MAINTENANCE INDICATOR	MEASUREMENT FREQUENCY	MAINTENANCE ACTIVITY
Sediment volume exceeds design capacity.	Inspect annually.	Remove accumulated sediment. Periodically test removed sediment to confirm that it is not hazardous. Hazardous sediments shall be disposed properly.
Debris/trash present in inlet structures.	Inspect quarterly.	Remove and dispose trash and debris.
Infiltration time exceeds 72 hours.	Inspect during one significant storm per year.	Remove sediment and scarify invert. If problem persists, notify the design engineer and determine action to achieve the design infiltration time. Immediately notify vector control authority for abatement assessment.
Vector harborage.(1)	Inspect monthly during the wet season.	Immediately notify vector control authority for vector abatement assessment.
Observed clogging or damage to inlet structures and controls.	Inspect quarterly.	Clean or repair clogged or damaged structures and controls. If damage or clogging is vector related, immediately notify vector control authority for abatement assessment.
Ground squirrel holes, vole or gopher mounds.	Inspect quarterly.	Firmly backfill burrows to prevent seepage, erosion and leakage.
General maintenance items.	Inspect quarterly.	Inspect and repair inlet structures, diversion structures, side slopes, fences and railing. Remove emerging trees and woody vegetation. Remove or paint over graffiti. If applicable, inspect for possible endangered species, threatened species, and species of special concern within the BMP maintenance perimeter.
Inspect for adequate vegetative coverage on side slopes.	Inspect annually and before rainy season.	Hydroseed barren spots at the beginning of the wet season; scarify barren spots if needed.
Average plant height greater than 18-inches.	Inspect quarterly.	Cut vegetation and remove clippings.

TABLE 2-2: INFILTRATION BASIN MAINTENANCE

MAINTENANCE INDICATOR	MEASUREMENT FREQUENCY	MAINTENANCE ACTIVITY
For applicable areas, emergent habitat that could attract endangered, or threatened species, or species of concern.	Inspect quarterly or as District Environmental recommends.	If BMP function will not be impaired, remove habitat or discourage attraction as recommended by District Environmental.

1. Monitoring and abatement of vectors can be done through agreement with the local vector control authority. Vector control authority also can determine if continued inspection is necessary.

Detention Device Maintenance

Description:

These measures are intended to maintain detention device effectiveness for treating runoff discharges. These requirements for regular inspection and maintenance will allow the devices to continue to function as designed for water quality purposes.

Appropriate Application:

The maintenance activities described in Table 2-3 apply to personnel who inspect and maintain detention devices.

Implementation:

- Field measurements of maintenance indicators are made by visual observation.
- See Cleaning (Section 2.2.1).
- See Protection of Drainage Paths, Drain Inlets and Watercourses (Section 2.2.3).
- See Perform Work in Dry Weather (Section 2.2.6).

TABLE 2-3: DETENTION DEVICE MAINTENANCE

MAINTENANCE INDICATOR	MEASUREMENT FREQUENCY	MAINTENANCE ACTIVITY
Sediment volume exceeds design capacity.	Inspect annually.	Remove accumulated sediment. Periodically test removed sediment to confirm that it is not hazardous. Hazardous sediments shall be disposed properly.
Trash/debris present in inlet or outlet structures.	Inspect quarterly.	Remove and dispose trash and debris.

TABLE 2-3: DETENTION DEVICE MAINTENANCE

MAINTENANCE INDICATOR	MEASUREMENT FREQUENCY	MAINTENANCE ACTIVITY
Observed clogging or damage to inlet and outlet structures and controls. Standing water exceeds 72 hours.	Inspect quarterly.	Clean or repair clogged or damaged structures and controls. Contact design engineer if necessary to modify standpipe or gate settings to achieve design drain time. Immediately notify vector control authority for abatement assessment.
Ground squirrel holes, vole or gopher mounds	Inspect quarterly.	Firmly backfill burrows to prevent seepage, erosion and leakage.
Vector harborage.[1]	Inspect monthly during the wet season.	Immediately notify vector control authority for vector abatement assessment.
General maintenance items.	Inspect quarterly.	Inspect and repair inlet and outlet structures, diversion structures, side slopes, trash racks, fences and railing. Remove emerging trees and woody vegetation. Remove or paint over graffiti.
Inspect for adequate vegetative coverage on side slopes.	Inspect annually and before rainy season.	Hydroseed barren spots at the beginning of the wet season; scarify barren spots if needed.
Average plant height greater than 18 inches.	Inspect quarterly.	Cut vegetation and remove clippings.
For applicable areas, emergent habitat that could attract endangered, or threatened species, or species of concern.	Inspect quarterly or as District Environmental recommends.	If BMP function will not be impaired, remove habitat or discourage attraction as recommended by District Environmental.

1. Monitoring and abatement of vectors can be done through agreement with the local vector control authority. Vector control authority also can determine if continued inspection is necessary.

Traction Sand Trap Device Maintenance (C7)

Description:

This BMP is intended to maintain the sand trap device as an effective device for treating runoff discharges. These requirements for regular inspection and maintenance will allow the devices to continue to function as designed.

Appropriate Applications:

The maintenance activities described in Table 2-4 apply to personnel who inspect and maintain traction sand trap devices.

Implementation:

- Field measurements of maintenance indicators are made by visual observation.
- See Cleaning (Section 2.2.1).
- See Protection of Drainage Paths, Drain Inlets and Watercourses (Section 2.2.3).
- See Solid Waste and Liquid Waste Management (Section 2.2.5).
- See Perform Work in Dry Weather (Section 2.2.6).

TABLE 2-4: TRACTION SAND TRAP DEVICE MAINTENANCE

MAINTENANCE INDICATOR	MEASUREMENT FREQUENCY	MAINTENANCE ACTIVITY
Scheduled sediment removal per design or if interim inspection reveals that the sediment volume exceeds design capacity.	Inspect annually and after significant winter storms.	Remove accumulated sediment. Periodically test removed sediment to confirm that it is not hazardous. Hazardous sediments shall be disposed properly.
Debris/trash present in inlet or outlet structures.	Inspect monthly and after significant storms.	Remove and dispose trash and debris.
Observed clogging or damage to riser pipe, filter cloth, or orifice plate. Standing water exceeds 72 hours.	Inspect monthly and after significant storms.	Clean clogged riser pipe and orifice plate. Repair or replace filter fabric on draw down riser if damaged or missing. Before starting repairs, allow complete draw down or pump remaining water from the sand trap basin. Contact design engineer if modifications are necessary to achieve the design draw down time. Immediately notify vector control authority for abatement assessment.
Vector harborage.[1]	Inspect monthly during the wet season.	Immediately notify vector control authority for vector abatement assessment.
General maintenance items.	Inspect monthly.	Inspect and repair inlet and outlet structures, diversion structures, side slopes, trash racks, fences and railing. Remove emerging trees and woody vegetation. Remove or paint over graffiti.

1. Monitoring and abatement of vectors can be done through agreement with the local vector control authority. Vector control authority can also determine if continued inspection is necessary.

Illicit Connection Detection, Reporting, and Removal (C9)

Description:

Procedure for maintenance field staff to detect, track, and report illicit connections and associated discharges into Caltrans storm water drainage systems. Illicit connections are usually permanent, underground pipe connections to Caltrans drainage systems that have not been approved by Caltrans.

This management practice is directed at continuous or recurring discharges through direct connections to storm water drainage systems or as run-on from adjacent properties. Illegal Discharge Control (D2) focuses on single-incident dumping or spills.

Appropriate Applications:

Detecting, reporting and removing illicit connections applies to all Caltrans existing facilities and construction sites.

BMP Implementation:

- See Cleaning (Section 2.2.1).
- See Protection of Drainage Paths, Drain Inlets and Watercourses (Section 2.2.3).
- Maintenance Supervisors and personnel, as part of their routine inspections and maintenance work, shall report all observed suspected illicit connections to the District Maintenance Storm Water Coordinator, who will forward these observations to the District Storm Water Coordinator.
- All public-initiated calls will be directed to the District's Public Affairs Office (each District has a widely publicized phone number). Calls regarding illicit connections will be logged and routed to the District NPDES Storm Water Coordinator.
- A reporting and tracking system will be developed for illicit connections.

2.6 D FAMILY (LITTER/DEBRIS/GRAFFITI)

Traffic causes loose material on the roadbed to concentrate along curbs, dikes, gutters, paved medians, interchange ramps, bridge decks, and at street intersections. Litter and debris removal activities include sweeping of shoulders, paved medians, etc., and litter removal along roadsides. These activities directly benefit water quality.

Illegal Discharge Control (D2)

Description:

Procedures for maintenance field staff to detect, correct, and report illegal dumping, discharges and spills of pollutants on Caltrans properties and facilities.

This management practice is directed at incidents involving dumping, discharges or spills that affect storm water.

Appropriate Applications:

Illegally discharged or dumped materials must be clearly identified to determine the appropriate personnel to perform the cleanup (e.g., maintenance personnel or Hazmat Response Team).

In the event of a spill of hazardous material, Caltrans personnel should refer to Emergency Response and Cleanup Practices (D5a) for more specific information.

BMP Implementation:

- See Cleaning (Section 2.2.1).
- Maintenance Supervisors and field personnel shall report to the District Storm Water Coordinator any observed illegal dumping or discharges as part of their routine inspections and maintenance work.

Sweeping Operations (D3)

Description:

The BMPs for this activity (see "BMP Implementation" below) are intended to reduce the potential for the discharge of potential pollutants generated during sweeping operations. The primary purpose of sweeping operations is to remove litter and debris from the traveled way to reduce traffic hazards and improve appearance. Caltrans has evaluated various types of sweepers, broom adjustments and gang sweeping to improve sweeping operations and efficiency.

Appropriate Applications:

Sweeping is usually performed when the amount of accumulated debris is between one-half cubic yard and one cubic yard per mile.

BMP Implementation:

- See Cleaning (Section 2.2.1).
- See Safer Alternative Products (Section 2.2.2).
- See Solid Waste and Liquid Waste Management (Section 2.2.5).
- Adjust brooms to maximize efficiency of sweeping operations.

Litter and Debris Removal (D4a)

Description:

This BMP is intended to reduce the potential for the discharge of potential pollutants generated during litter and debris removal. Litter and debris removal will be performed on Caltrans rights-of-way to ensure that highways have a neat, clean, attractive appearance.

Appropriate Applications:

This BMP should be implemented on a site-specific basis whenever litter and debris removal activities are performed. The frequency of removal is dependent on the availability of resources, safety considerations and rate of accumulation.

BMP Implementation:

- See Cleaning (Section 2.2.1).
- Consider litter and debris removal from drainage grates, trash racks, and ditch lines a top priority to prevent clogging of storm water drainage systems.
- See Protection of Drainage Paths, Drain Inlets and Watercourses (Section 2.2.3).
- See Solid Waste and Liquid Waste Management (Section 2.2.5).
- See Perform Work in Dry Weather (Section 2.2.6).

Anti-Litter Signs (D4b)

Description:

Caltrans conducts a signage program that warns against littering (e.g., "$1000 Fine for Littering"). These signs are placed along highways where littering violations are frequent. The purpose of this program is to discourage littering by educating motorists about the fine for littering.

The Care for California Program displays signs showing an image of trash thrown into a garbage can. These signs encourage positive behavior and can be found at vista points, rest areas, park-and-ride lots and along conventional highways.

Appropriate Applications:

- Along corridors that receive an unsightly amount of litter.
- Along freeways susceptible to dumping activities (litter fine only).
- At vista points, rest areas and park-and-ride lots.

BMP Implementation:

- Maintenance Supervisors will travel highways in their assigned section to observe overall conditions and assess the need for litter removal and installation of "$1000 Fine for Littering" signs. "$1000 Fine for Littering" signs will be installed when litter removal becomes a concern on a highway segment or at a park-and-ride, safety roadside rest area or vista point. If Caltrans personnel observe increased rates of litter deposition, they will notify their supervisor.

Emergency Response and Cleanup Practices (D5a)

Description:

Emergency response and cleanup practices address the isolation, containment, identification, hazard assessment, proper removal, and disposal of spilled substances on highway rights-of-way. Proper containment and cleanup of spilled material, especially material that is spreading rapidly, will reduce the discharge of potential pollutants to storm water drainage systems or watercourses. These practices include coordination with MS4s, the RWQCB and state agencies in certain circumstances.

Appropriate Applications:

This BMP is to be used when Caltrans personnel spill or encounter spilled materials.

BMP Implementation:

- See Cleaning (Section 2.2.1).
- See Safer Alternative Products (Section 2.2.2).
- See Protection of Drainage Paths, Drain Inlets and Watercourses (Section 2.2.3).
- See Solid Waste and Liquid Waste Management (Section 2.2.5).
- Maintenance staff and supervisors shall determine the appropriate spill response after proper assessment of a spilled material. After proper hazard assessment, action is to be taken to safely contain the spilled material, to remove it or have it removed by the responsible party or by a qualified contractor, and to ensure proper disposal. The response includes notification of the local MS4 if the spill will impact the MS4's ability to comply with its permit. See Section 9.3 of the Statewide SWMP for a summary of notification requirements.

Graffiti Removal (D6)

Description:

The BMPs for this activity (see "BMP Implementation" below) are intended to reduce the potential for the discharge of potential pollutants generated during graffiti removal.

Graffiti is removed or painted over. This activity is performed to ensure that the freeways/highways have a neat, clean, attractive appearance.

Appropriate Applications:

These BMPs should be implemented on a site-specific basis whenever graffiti removal activities are performed.

BMP Implementation:

- When painting over or removing graffiti, take every precaution to prevent spillage of paint, cleaning products or anti-graffiti coatings onto the ground. If necessary, use plastic sheeting to protect the ground, and clean the area thoroughly after work is completed (see Painting, H7b).
- See Cleaning (Section 2.2.1).
- See Safer Alternative Products (Section 2.2.2).
- See Protection of Drainage Paths, Drain Inlets and Watercourses (Section 2.2.3).
- See Solid Waste and Liquid Waste Management (Section 2.2.5).
- See Perform Work in Dry Weather (Section 2.2.6).
- Cleaning products must be used in accordance with manufacturers' recommendations.

2.7 E FAMILY (LANDSCAPING)

Vegetation control activities include chemical and mechanical weed control, tree and shrub pruning, brush chipping and tree and shrub removal.

Caltrans maintains as much native vegetation on roadsides as is compatible with the surrounding environment, safe highway use, aesthetics, erosion, and dust control. However, some of this vegetation must be controlled to reduce the risk of roadside fires, to improve safety and to eliminate noxious weeds.

In general, vegetation management practices are designed to control vegetation while minimizing soil erosion. The Caltrans vegetation control program is based on integrated pest management principles, including the use of physical, chemical and biological methods.

Chemical Vegetation Control (E1a)

Description:

The BMPs for this activity (see "BMP Implementation" below) are intended to reduce the potential for the discharge of potential pollutants generated during chemical vegetation control. This method of vegetation control uses herbicides to eliminate and prevent weed

growth. The purpose is to control weed growth that may threaten the growth and health of preferred vegetation or that may become a fire hazard or raise other safety concerns.

Appropriate Applications:

The BMPs should be implemented on a site-specific basis whenever chemical vegetation control activities are performed.

BMP Implementation:

- Caltrans has an Integrated Vegetation Control Plan that integrates physical, chemical, and biological methods to provide the most effective pest management approach.
- Caltrans follows an approved list of chemicals that is more restrictive than herbicides used by other public agencies and the public.
- Caltrans has a goal to reduce chemical usage.
- See Cleaning (Section 2.2.1).
- See Safer Alternative Products (Section 2.2.2).
- See Perform Work in Dry Weather (Section 2.2.6).
- To achieve effective vegetation control through chemical means, maintenance personnel should consider: (1) use of the correct herbicide or pesticide, (2) seasonal timing of applications, (3) timing in relation to expected precipitation events, (4) proximity to water bodies, (5) speed of travel when applying chemical treatment and (6) proper agitation of the spray tank.
- Apply chemicals in compliance with federal, state, and local pesticide/herbicide use regulations.
- Apply chemicals only as specified on the "Pesticide Use Recommendation" on the label. The pesticide label is considered to be the law. Use of a pesticide in a way that is inconsistent with the label is considered to be a violation. Follow safety and application methods as specified in the Annual Pesticide Safety Training (this includes proximity to waterways).
- See Protection of Drainage Paths, Drain Inlets and Watercourses (Section 2.2.3).
- Activities will be supervised by a licensed pest control adviser.
- Apply herbicides as recommended by the District Annual Vegetation Control Plan.
- Minimize the use of post-emergent herbicides in and near storm water drainage systems or watercourses.
- Calibrate the spray rig as needed, to ensure accurate applications of pesticides.

- Complete chemical use report forms. Completed forms include the date, location, chemicals, amounts used, purpose, weather, wind direction, and other pertinent information.
- Avoid using overhead irrigation for as long as the chemical manufacturer recommends after applying pesticides or post-emergents.
- Avoid applying post-emergents prior to a predicted rain event.

Mechanical Vegetation Control/Mowing (E1b)

Description:

The BMPs for this activity (see "BMP Implementation" below) are intended to reduce the potential for the discharge of potential pollutants generated during mechanical vegetation control. Mechanical vegetation methods control weeds growing within highway rights-of-way using machinery (mowers) and/or hand held equipment. The purpose is to control grasses and weeds for improved roadside appearance and fire prevention.

Appropriate Applications:

These BMPs should be implemented on a site-specific basis whenever mechanical vegetation control activities are performed.

BMP Implementation:

- See Cleaning (Section 2.2.1).
- See Safer Alternative Products (Section 2.2.2).
- See Protection of Drainage Paths, Drain Inlets and Watercourses (Section 2.2.3).
- See Solid Waste and Liquid Waste Management (Section 2.2.5).
- See Perform Work in Dry Weather (Section 2.2.6).
- Leave organic material from mechanical weed control operations in place or spread on flat, nonlandscaped areas to provide protection from erosion.

Tree and Shrub Pruning (E2a)

Description:

The BMPs for this activity (see "BMP Implementation" below) are intended to reduce the potential for the discharge of potential pollutants generated during tree and shrub pruning. Tree and shrub pruning is the trimming of trees and shrubs to preserve the health and structure of trees and shrubs, to maintain sight distances and appearance, and to prevent property damage.

Appropriate Applications:

These BMPs should be implemented on a site-specific basis whenever tree and shrub pruning activities are performed.

BMP Implementation:

- See Cleaning (Section 2.2.1).
- See Safer Alternative Products (Section 2.2.2).
- See Protection of Drainage Paths, Drain Inlets and Watercourses (Section 2.2.3).
- See Solid Waste and Liquid Waste Management (Section 2.2.5).
- See Perform Work in Dry Weather (Section 2.2.6).

Tree and Shrub Removal (E2b)

Description:

The BMPs for this activity (see "BMP Implementation" below) are intended to reduce the potential for the discharge of potential pollutants generated during tree and shrub removal. Dead trees and shrubs and those that are diseased or dying are removed to maintain safety by preventing any part of the dead tree or shrub from falling or blowing onto a roadway. Trees and shrubs are also removed to maintain a healthy landscape alongside the roadside.

Appropriate Applications:

These BMPs should be implemented on a site-specific basis whenever tree and shrub removal activities are performed.

BMP Implementation:

- See Cleaning (Section 2.2.1).
- See Safer Alternative Products (Section 2.2.2).
- See Protection of Drainage Paths, Drain Inlets and Watercourses (Section 2.2.3).
- See Solid Waste and Liquid Waste Management (Section 2.2.5).
- See Perform Work in Dry Weather (Section 2.2.6).

Water Line Repairs (E3a)

Description:

The BMPs for this activity (see "BMP Implementation" below) are intended to reduce the potential for the discharge of potential pollutants generated during water line repairs (generally irrigation systems). Water line repairs include irrigation system maintenance and repair activities.

Appropriate Applications:

These BMPs should be implemented on a site-specific basis whenever water line repair activities are performed.

BMP Implementation:

- See Cleaning (Section 2.2.1).
- See Safer Alternative Products (Section 2.2.2).
- Shut off the water source from a broken line, sprinkler or valve as soon as possible to prevent excess water from flowing.
- See Protection of Drainage Paths, Drain Inlets and Watercourses (Section 2.2.3).

Irrigation (Watering), Potable and Nonpotable (E3b)

Description:

The BMPs for this activity (see "BMP Implementation" below) are intended to reduce the potential for the discharge of potential pollutants generated during irrigation (watering). Irrigation or watering activities are conducted on landscaped areas using potable and nonpotable water.

Appropriate Applications:

These BMPs should be implemented on a site-specific basis whenever irrigation activities are performed.

BMP Implementation:

- See Cleaning (Section 2.2.1).
- See Safer Alternative Products (Section 2.2.2).
- See Perform Work in Dry Weather (Section 2.2.6).
- Inspect irrigation systems to ensure that the appropriate amount of water is being used and that runoff is minimized. Consider factors such as soil structure, grade, time of

year, and type of plant material in determining the proper amounts of water for a specific area.

- Make necessary repairs on broken water lines, sprinklers, valves, or nozzles as soon as possible (see Water Line Repairs, E3a).
- Avoid overwatering.
- Irrigation controllers should be programmed to minimize runoff.

Erosion Control (E9)

Description:

This BMP is intended to reduce the potential for the discharge of potential pollutants generated during soil-disturbing activities. Erosion control/soil stabilization practices refer to the stabilization of cut and fill slopes and other areas within highway rights-of-way.

Appropriate Applications:

This BMP should be implemented on a site-specific basis whenever soil-disturbing activities are performed.

BMP Implementation:

- See Cleaning (Section 2.2.1).
- See Safer Alternative Products (Section 2.2.2).
- See Protection of Drainage Paths, Drain Inlets and Watercourses (Section 2.2.3).
- Avoid removing vegetation from erodible surface areas.
- Use temporary soil stabilization and sediment controls that are consistent with construction site measures (see Section 4.5.1).

Vegetated Surfaces (E11)

Description:

A vegetation inspection program will be established to review vegetated slopes and unpaved areas. The program will identify and schedule repairs to maintain the stability of slopes and unpaved areas.

Appropriate Application:

All vegetated slopes and unpaved areas will be inspected on a five-year cycle.

BMP Implementation:

The following general steps should be taken to evaluate and re-establish vegetated surfaces:

- See Cleaning (Section 2.2.1).
- See Safer Alternative Products (Section 2.2.2).
- Each District will establish a multi-discipline roadside review team to periodically inspect vegetated surfaces.
- Areas will be inspected on a five-year cycle to ensure that vegetated surfaces are maintained in a manner that minimizes erosion.
- Areas with recurring problems will be inspected on an as-needed basis.
- Reported erosion concerns will be inspected.
- Repairs that are within the abilities of the roadside inspection team will be repaired by that team.
- Large areas with erosion concerns that cannot be repaired by the roadside inspection team will be programmed into the State Highway Operation and Protection Program (SHOPP) for funding and repair.
- A reporting format for scheduling, inspection findings, and repairs will be developed for the program.

2.8 H FAMILY (BRIDGES)

Bridge maintenance activities include work such as repairing damage or deterioration in various bridge components; removing debris and drift from piers, bearing seats and abutments; repairing expansion joints; cleaning and painting structural steel; and sealing concrete surfaces. Also included are the maintenance of electrical and mechanical equipment on movable-span bridges and the operation of the moveable spans. Pollution control activities focus on ensuring that excess materials and hazardous materials remain controlled and are not released to the environment.

Welding and Grinding (H2)

Description:

The BMP for this activity (see "BMP Implementation" below) is intended to reduce the potential for the discharge of potential pollutants generated during welding and grinding. Welding and grinding are used during maintenance activities conducted on structures, such as bridges and roads, and individual service facilities.

Appropriate Applications:

This BMP should be implemented on a site-specific basis whenever welding and grinding activities are performed.

BMP Implementation:

- See Cleaning (Section 2.2.1).
- See Safer Alternative Products (Section 2.2.2).
- See Protection of Drainage Paths, Drain Inlets and Watercourses (Section 2.2.3).
- See Solid Waste and Liquid Waste Management (Section 2.2.5).
- See Perform Work in Dry Weather (Section 2.2.6).

Sand Blasting, Wet Blast with Sand Injection and Hydroblasting (H7a)

Description:

The BMPs for this activity (see "BMP Implementation" below) are intended to reduce the potential for the discharge of potential pollutants generated during sand blasting, wet blast with sand injection, and hydroblasting. Sand blasting and hydroblasting are used to clean residue from concrete spalls and structural steel and for graffiti removal.

Appropriate Applications:

These BMPs should be implemented on a site-specific basis whenever sand blasting, wet blast with sand injection, or hydroblasting activities are performed.

BMP Implementation:

- See Cleaning (Section 2.2.1).
- See Safer Alternative Products (Section 2.2.2).
- See Protection of Drainage Paths, Drain Inlets and Watercourses (Section 2.2.3).
- See Solid Waste and Liquid Waste Management (Section 2.2.5).
- See Perform Work in Dry Weather (Section 2.2.6).
- Contain process water during hydroblasting. Use a vacuum or other system, and return bulk materials and wastewater to a maintenance facility in an appropriate container.
- Meter sand during sandblasting to use the minimum amount necessary to complete the job.

Painting (H7b)

Description:

The BMPs for this activity (see "BMP Implementation" below) are intended to reduce the potential for the discharge of potential pollutants generated during painting. Painting operations include the application of paint to facilities and highway and bridge surfaces and routine maintenance of painting equipment.

Appropriate Applications:

These BMPs should be implemented on a site-specific basis whenever painting activities are performed.

BMP Implementation:

- See Cleaning (Section 2.2.1).
- Transport paint and materials to and from work sites in containers with positive locking lids. Secure the paint containers to the transport vehicle using approved methods (e.g., ropes and straps).
- See Safer Alternative Products (Section 2.2.2).
- See Protection of Drainage Paths, Drain Inlets and Watercourses (Section 2.2.3).
- See Solid Waste and Liquid Waste Management (Section 2.2.5).
- See Perform Work in Dry Weather (Section 2.2.6).
- Collect all paint equipment wash water and return it to a maintenance facility. Dispose the equipment wash water in wastewater evaporation trays at a maintenance facility. After the liquid evaporates, dispose the remaining paint solids according to approved waste disposal procedures.
- If wastewater evaporation trays are not available, consult the District Maintenance Hazmat Manager for proper disposal.

Bridge Repairs (H9a)

Description:

The BMPs for this activity (see "BMP Implementation" below) are intended to reduce the potential for the discharge of potential pollutants generated during bridge repairs. Bridge maintenance activities include repairing bent or damaged steel beams, cracked or spalled concrete, damaged expansion joints and bent or damaged railings.

Appropriate Applications:

These BMPs should be implemented on a site-specific basis whenever bridge repair activities are performed.

BMP Implementation:

- See Cleaning (Section 2.2.1).
- See Safer Alternative Products (Section 2.2.2).
- See Protection of Drainage Paths, Drain Inlets and Watercourses (Section 2.2.3).
- See Solid Waste and Liquid Waste Management (Section 2.2.5).
- See Perform Work in Dry Weather (Section 2.2.6).
- When working over watercourses, stage the operation to capture and collect debris.
- When bridge repair concerns cracked or spalled concrete refer to Concrete Work (B2).

Draw Bridge Maintenance (H9b)

Description:

The BMPs for this activity (see "BMP Implementation" below) are intended to reduce the potential for the discharge of potential pollutants generated during draw bridge maintenance. Draw bridge maintenance activities include maintaining mechanical and electrical equipment, removing debris and drift, and removing debris from sumps.

Appropriate Applications:

These BMPs should be implemented on a site-specific basis whenever draw bridge maintenance activities are performed.

BMP Implementation:

- See Cleaning (Section 2.2.1).
- See Safer Alternative Products (Section 2.2.2).
- See Protection of Drainage Paths, Drain Inlets and Watercourses (Section 2.2.3).
- See Solid Waste and Liquid Waste Management (Section 2.2.5).
- Use the minimum amount of materials necessary to complete the job.
- Use drip pans under equipment with grease fittings to capture excess grease. Dispose waste according to approved procedures.

2.9 J FAMILY (OTHER STRUCTURES)

The J Family of activities includes maintenance and repair of pumping plants. Pollution control activities focus on ensuring that debris, wastewater, excess materials and hazardous materials remain controlled and are not released to the environment.

Pump Station Cleaning (J1)

Description:

The BMPs for this activity (see "BMP Implementation" below) are intended to reduce the potential for the discharge of potential pollutants generated during pump station cleaning. Pump stations are used to dewater depressed highway sections where water routinely collects. Maintenance work includes structural repairs, removal of material from sumps, and periodic servicing or repair of electrical and mechanical equipment. Periodic pump station inspection and cleaning will reduce the discharge of potential pollutants to storm water drainage systems or watercourses.

Appropriate Applications:

These BMPs provide guidance to maintenance personnel involved in inspecting and cleaning pump stations.

BMP Implementation:

- See Cleaning (Section 2.2.1).
- See Safer Alternative Products (Section 2.2.2).
- Inspect pump stations to determine if cleaning or repairs are required.
- During each inspection, check the sump screen to ensure that it is free of debris and inspect the level of solids in sumps. When solids accumulate to approximately 50 percent of the basin capacity, schedule sumps to be cleaned.
- See Protection of Drainage Paths, Drain Inlets and Watercourses (Section 2.2.3).
- Inspect and clean (if necessary) pump outfall facilities to ensure a free flow of water beyond the pumping system.
- See Maintenance Facility Housekeeping Practices (Section 2.2.4).
- See Solid Waste and Liquid Waste Management (Section 2.2.5).
- See Perform Work in Dry Weather (Section 2.2.6).
- Contain and collect pumping equipment drips or leaks by using drip pans or absorbent materials to absorb the oil or petroleum products.

2.10 K FAMILY (ELECTRICAL)

The K Family of activities include all work performed on highway facilities used for control of traffic (e.g., traffic signal systems, highway and sign lighting systems, toll bridge electrical systems, and other related systems). Pollution control activities focus on ensuring that debris and hazardous materials remain controlled and are not released to the environment.

Saw Cutting (K6)

Description:

The BMPs for this activity (see "BMP Implementation" below) are intended to reduce the potential for the discharge of potential pollutants generated during saw cutting.

Appropriate Applications:

These BMPs should be implemented on a site-specific basis whenever saw cutting (including detector loop activities) is performed.

BMP Implementation:

- See Cleaning (Section 2.2.1).
- See Safer Alternative Products (Section 2.2.2).
- See Protection of Drainage Paths, Drain Inlets and Watercourses (Section 2.2.3).
- See Solid Waste and Liquid Waste Management (Section 2.2.5).
- See Perform Work in Dry Weather (Section 2.2.6).
- Minimize the use of water; apply water only to the cutting site.
- Minimize the use of loop sealant for detector loops by carefully estimating the amount needed; return excess loop sealant to a maintenance facility.

2.11 M FAMILY (TRAFFIC GUIDANCE)

The M Family of activities covers all work to replace and maintain roadway delineation and pavement markings. Typical work includes refurbishing delineation and replacement of missing markers. Pollution control activities focus on ensuring that paints, debris, excess materials, and hazardous materials remain controlled and are not released to the environment.

Thermoplastic Striping and Preheaters (M1a)

Description:

The BMPs for this activity (see "BMP Implementation" below) are intended to reduce the potential for the discharge of potential pollutants generated during thermoplastic preheating and striping. Pavement marking with thermoplastic materials is used for pavement delineation to guide or control vehicular traffic. Thermoplastic material is heated in preheater equipment, then applied to pavement by thermoplastic stripers or applicators.

Appropriate Applications:

These BMPs should be implemented on a site-specific basis whenever thermoplastic striping activities are performed.

BMP Implementation:

- See Cleaning (Section 2.2.1).
- See Safer Alternative Products (Section 2.2.2).
- See Protection of Drainage Paths, Drain Inlets and Watercourses (See Section 2.2.3).
- See Solid Waste and Liquid Waste Management (Section 2.2.5).
- See Perform Work in Dry Weather (Section 2.2.6).
- The preheater should be filled carefully to prevent splashing or spilling of hot thermoplastic. Leave six inches of space at the top of the preheater container when filling thermoplastic to allow room for material to move when the vehicle is deadheaded.

Paint Striping and Markings (M1b)

Description:

The BMPs for this activity (see "BMP Implementation" below) are intended to reduce the potential for the discharge of potential pollutants generated during paint striping and markings. Pavement striping is used to supplement traffic signs and to guide and control vehicular traffic. Longitudinal pavement striping delineates the separation of traffic flow on highways and freeways. Water-based paints are applied using striper paint systems.

Pavement paint markings are used to supplement traffic signs and to guide and control vehicular and pedestrian traffic. Water-based paints are applied to pavement by using stencil or striper paint systems. Stencils are also used to place pavement paint markings.

Appropriate Applications:

The BMPs should be implemented on a site-specific basis whenever paint striping and marking activities are performed.

BMP Implementation:

- See Cleaning (Section 2.2.1).
- See Safer Alternative Products (Section 2.2.2).
- See Protection of Drainage Paths, Drain Inlets and Watercourses (Section 2.2.3).
- See Solid Waste and Liquid Waste Management (Section 2.2.5).
- See Perform Work in Dry Weather (Section 2.2.6).
- Be sure no pressure remains in paint striper system when setting up, cleaning, pulling filters, or servicing spray guns. Release pressure on bead tank before removing lid.
- Check to ensure that the paint spray gun remains closed when not in use to prevent leaks.
- Check for leaking or ruptured paint containers.
- Small paint spills should be wiped up immediately with rags. Use dry absorbent material for larger spills.

Raised/Recessed Pavement Marker Application and Removal (M3a)

Description:

The BMPs for this activity (see "BMP Implementation" below) are intended to reduce the potential for the discharge of potential pollutants generated during raised/recessed pavement marker application and removal. Pavement markers are used to supplement traffic signs and convey messages or directions to motorists. Pavement markers are either surface mounted (raised) or placed in recessed slots in the pavement. Markers are applied using bitumen/epoxy adhesives. Damaged or old markers are removed for replacement using hand tools or special attachments on a motor grader.

Appropriate Applications:

These BMPs should be implemented on a site-specific basis whenever pavement marker application and removal activities are performed.

BMP Implementation:

- See Cleaning (Section 2.2.1).
- See Safer Alternative Products (Section 2.2.2).

- See Protection of Drainage Paths, Drain Inlets and Watercourses (Section 2.2.3).
- See Solid Waste and Liquid Waste Management (Section 2.2.5).
- See Perform Work in Dry Weather (Section 2.2.6).
- Melting tanks should be loaded with care and not filled beyond six inches from the top to leave room for splashing when vehicle is deadheaded.
- When servicing or filling melting tanks, ensure that all pressure is released before removing lids to avoid spills.

Thermoplastic Grinding and Removal (M3b)

Description:

The BMP for this activity (see "BMP Implementation" below) is intended to reduce the potential for the discharge of potential pollutants generated during thermoplastic grinding and removal. Thermoplastic material is applied to the road surface to delineate lanes, pedestrian crosswalks, turn pockets and to convey other information to motorists. Damaged or obsolete thermoplastic material is removed by grinding, hand removal, heating and scraping, etc., the material off the pavement surface.

Appropriate Applications:

This BMP should be implemented on a site-specific basis whenever thermoplastic grinding and removal activities are performed.

BMP Implementation:

- See Cleaning (Section 2.2.1).
- See Safer Alternative Products (Section 2.2.2).
- See Protection of Drainage Paths, Drain Inlets and Watercourses (Section 2.2.3).
- See Solid Waste and Liquid Waste Management (Section 2.2.5).
- See Perform Work in Dry Weather (Section 2.2.6).

Median Barrier Repair (M7)

Description:

The BMPs for this activity (see "BMP Implementation" below) are intended to reduce the potential for the discharge of potential pollutants generated during median barrier repair. Median barriers may require repair following an accident or as part of routine maintenance activities.

Appropriate Applications:

These BMPs should be implemented on a site-specific basis whenever median barrier repair activities are performed.

BMP Implementation:

- See Cleaning (Section 2.2.1).
- See Safer Alternative Products (Section 2.2.2).
- See Protection of Drainage Paths, Drain Inlets and Watercourses (Section 2.2.3).
- See Solid Waste and Liquid Waste Management (Section 2.2.5).
- See Perform Work in Dry Weather (Section 2.2.6).
- When median barrier repair requires concrete work, refer to Concrete Work (B2).

Vehicle Energy Attenuators (M8)

Description:

The BMPs for this activity (see "BMP Implementation" below) are intended to reduce the potential for the discharge of potential pollutants generated during the maintenance of vehicle energy attenuators. Vehicle energy attenuators, or impact energy attenuators, are intended to reduce the severity of a collision with a fixed object that cannot be removed or protected by other types of protective systems. Vehicle energy attenuators are typically canisters which are filled with water or sand or are of a lightweight, crushable design. Vehicle energy attenuators require periodic maintenance to ensure that they are viable and in the correct position following contact with a moving vehicle.

Appropriate Applications:

These BMPs should be implemented on a site-specific basis whenever vehicle energy attenuator activities are performed.

BMP Implementation:

- See Cleaning (Section 2.2.1).
- See Safer Alternative Products (Section 2.2.2).
- See Solid Waste and Liquid Waste Management (Section 2.2.5).

2.12 R FAMILY (SNOW AND ICE CONTROL)

Snow removal and ice control include snow removal operations and opening of drain inlets that get covered or blocked by snow and ice. Because salt, de-icing chemicals, and abrasives can pollute storm water runoff, Caltrans uses no more than the minimum amount of these materials necessary for effective snow and ice control.

Snow and Ice Control (R1)

Description:

The BMPs for this activity (see "BMP Implementation" below) are intended to reduce the potential for the discharge of potential pollutants generated during snow and ice control. Snow removal and ice control includes all work in connection with snow removal, drift prevention, installation and maintenance of snow fences, and snow pole installation and removal. Activities also include:

- Opening of drains covered by snow and ice;
- Opening of roads that are normally allowed to close for the winter season; and
- Mechanical spreading of abrasives and de-icing agents.

Proper snow and ice control will reduce the discharge of de-icing agents and sediment to storm water drainage systems or watercourses. Traction sand Trap Device Maintenance (C7) is described in Section 2.5.

Appropriate Applications:

This BMP provides guidance to maintenance personnel who are involved in snow and ice removal activities. The use or nonuse of de-icing agents is based on driver safety, total costs, geographic location and traffic delay.

In all areas of the state where significant amounts of abrasives are regularly required, Caltrans will increase the sweeping frequency to remove accumulated abrasives.

BMP Implementation:

- See Cleaning (Section 2.2.1).
- Inspect snow and ice control vehicles and equipment for fuel or oil leaks prior to using.
- Where necessary, sweep after storms to remove sand and cinders.
- Routinely calibrate spreader to avoid the over-application of de-icing agents or other abrasives. Use no more than is necessary for effective snow and ice control.

Consider using alternative de-icing agents where runoff from roads discharges directly to sensitive watercourses.

- Maintain accurate records of the locations of salt application and the quantities of salt used.
- Use road abrasives that have been washed, screened or graded to reduce silt and clay to insignificant levels.
- Avoid blowing or pushing ice, snow, abrasives or other debris into watercourses, drainage paths, storm water drainage systems or where a storm drain inlet can be blocked.
- Store de-icing agents in covered areas, bunkers, or storage buildings. Do not store de-icing chemicals where they will come into contact with storm water runoff.
- See Safer Alternative Products (Section 2.2.2).
- See Protection of Drainage Paths, Drain Inlets and Watercourses (Section 2.2.3).

2.13 S FAMILY (STORM MAINTENANCE)

The purpose of the S Family of activities is to provide temporary road openings and related maintenance to keep damaged facilities operational following major damage caused by storms, earthquakes, slides, tidal waves, and other major disasters. Environmental concerns include placement of slide materials so that waterways are not significantly impacted within the overall priority of maintaining public safety.

Minor Slides and Slip-Outs (S3)

Description:

The BMPs for this activity (see "BMP Implementation" below) are intended to reduce the potential for the discharge of potential pollutants generated during repair of minor slides and slip-outs. Repair of minor slides and slip-outs includes cleaning up or backfilling minor slides, slip-outs, or other minor damage to the roadside, the removal of materials (soil, rock, boulders) that have been deposited on the roadway by wind, water, or minor landslides, placing dikes or otherwise controlling drainage at minor slides and slip-outs, filling and repairing minor erosion damage to cut and fill slopes, and clearing the roadside of downed or damaged vegetation.

Appropriate Applications:

These BMPs should be implemented on a site-specific basis whenever minor slide and slip-out activities are performed.

BMP Implementation:

- See Cleaning (Section 2.2.1).
- See Safer Alternative Products (Section 2.2.2).
- Locate watercourses, drain inlets and drainage ditches downstream of the area where minor slides and slip-outs are being repaired or cleared.
- Protect watercourses, drainage paths, drain inlets and storm water drainage ditches from discharges of sediment or organic material (e.g., by installing temporary sediment barriers such as rock filter berms or sand bag barriers).
- See Protection of Drainage Paths, Drain Inlets and Watercourses (Section 2.2.3).
- See Solid Waste and Liquid Waste Management (Section 2.2.5).
- Consider installing temporary sediment barriers around stockpiled materials in the winter season after the cleanup and repair of a minor slide and slip-out is completed.
- Setup the work area such that vehicles will not track materials in or out.

2.14 T FAMILY (MANAGEMENT AND SUPPORT)

The T Family of activities include the following:

- Storage, repair and maintenance of vehicles, equipment and related support materials;
- Fueling and washing of vehicles and equipment;
- Maintenance of buildings, storm water drainage systems and landscaping;
- Storage of sand, salt, asphalt, rock, pesticides and herbicides;
- Storage of wastes generated on-site; and
- Bulk storage of sediment, litter and debris generated by road maintenance activities.

Caltrans currently implements practices to reduce the potential for storm water pollution by minimizing contact between storm water and the various substances used at maintenance facilities. BMPs also focus on proper handling of materials and wastes.

Building and Grounds Maintenance (T5b)

Description:

Permanent maintenance facilities require building and grounds maintenance. Building and grounds maintenance includes care of landscaped areas around the facility, cleaning of parking areas and pavements other than in the area of industrial activity and maintenance of storm water drainage systems. Minimization of water use, proper

handling and disposal of waste collected and wash waters used during building and grounds maintenance, and immediate cleanup of spills are key elements in the protection of storm water quality.

Appropriate Applications:

These BMPs are applicable to maintenance personnel involved in building and grounds maintenance activities.

BMP Implementation:

- See Cleaning (Section 2.2.1).
- See Safer Alternative Products (Section 2.2.2).
- See Protection of Drainage Paths, Drain Inlets and Watercourses (Section 2.2.3).
- See Maintenance Facility Housekeeping Practices (see Section 2.2.4).
- See Solid Waste and Liquid Waste Management (Section 2.2.5).
- See Perform Work in Dry Weather (Section 2.2.6).
- Minimize water use in washing activities.
- Properly dispose wash water and sediment generated by building maintenance activities. Dispose wash water to the sanitary sewer system.
- Regularly inspect, clean and maintain storm water drainage systems. This is particularly important prior to the first rains each year.
- Properly dispose sweepings and cleaning wastes.
- Apply fertilizers and pesticides in accordance with the label instructions (see Chemical Vegetation Control, E1a).

Storage of Hazardous Materials (Working Stock) (T7a)

Description:

Maintenance facilities store a variety of products that may be harmful to the environment if they come into contact with surface waters. These BMPs (see "BMP Implementation" below) are intended to reduce the potential for the discharge of materials from hazardous material storage sites to storm water drainage systems or watercourses by minimizing exposure of the materials to storm water and safeguarding against accidental release of materials.

Appropriate Applications:

This BMP is applicable to maintenance facilities that store hazardous materials. In most cases, a maintenance facility will have a Hazardous Materials Business Plan as required by state law. Hazardous materials storage must conform to this plan.

BMP Implementation:

Hazardous Materials Storage (General)

- See Cleaning (Section 2.2.1).
- See Safer Alternative Products (Section 2.2.2).
- See Protection of Drainage Paths, Drain Inlets and Watercourses (Section 2.2.3).
- See Solid Waste and Liquid Waste Management (Section 2.2.5).
- Ensure that covers or caps are secure on containers.
- Install safeguards to prevent accidental releases (such as overflow protection devices, automatic shutdown transfer pumps, protection guards around tanks and piping, and limiting of access to unauthorized persons).
- Maintain hazardous materials storage areas to minimize exposure to storm water by storing materials on paved surfaces, minimizing storage and handling of materials, and regularly inspecting storage facilities.
- Maintain an ample inventory of appropriate spill cleanup materials near the storage area.
- Attend to any spills immediately.
- Store hazardous liquid and solid materials with secondary containment.
- Store used lead acid batteries, including cracked batteries, in secondary containment.

Regular Maintenance of Outdoor Container Storage Area

- Inspect storage areas regularly. Ensure that all containers are covered and in good condition.
- If a container is corroded or leaking, have trained and qualified personnel or the District Maintenance Hazmat Manager transfer wastes to an appropriate container.

Paint Storage Area

- Inspect all pallets of paint to ensure that they are securely fastened before moving.
- When using a forklift to load or off-load paint, minimize possible spills and ruptures of paint containers.

- Store paint materials in an area with a canopy or roof designed to direct runoff away from the area.

Material Storage Controls (Hazardous Waste) (T7c)

Description:

Maintenance facilities store a variety of products that may adversely impact water quality if they come into contact with surface waters. These BMPs are intended to reduce the potential for the discharge of hazardous waste from hazardous waste storage sites to drainage paths, drainage systems or watercourses by providing safeguards against accidental releases and minimizing exposure of the hazardous waste to storm water.

Appropriate Applications:

These BMPs are applicable to all maintenance facilities that store hazardous waste and/or any material considered by state or federal regulations to be hazardous waste.

BMP Implementation:

- See Cleaning (Section 2.2.1).
- See Safer Alternative Products (Section 2.2.2).
- Maintain hazardous waste storage areas to minimize exposure to storm water by storing waste on paved surfaces, minimizing the storage and handling of waste and regularly inspecting storage facilities.
- Maintain an ample inventory of appropriate spill cleanup materials near the storage area.
- Attend to any spills immediately.

Outdoor Storage of Raw Materials (T7d)

Description:

Maintenance facilities and activities based out of maintenance facilities store a variety of products that may be harmful to the environment if they come into contact with storm water runoff. These BMPs are intended to reduce the potential for the discharge of products from outdoor raw materials storage sites to drainage paths, storm water drainage systems or watercourses by minimizing exposure of the products to storm water.

Appropriate Applications:

These BMPs are applicable to maintenance facilities that store raw materials outdoors.

BMP Implementation:

- See Cleaning (Section 2.2.1).
- See Safer Alternative Products (Section 2.2.2).
- See Protection of Drainage Paths, Drain Inlets and Watercourses (Section 2.2.3).
- Promote good housekeeping procedures, including sweeping of surfaces where material is blown or washed from the storage area and keeping storage containers in good condition. See Maintenance Facility Housekeeping Practices (Section 2.2.4).
- Inspect storage areas regularly.

Vehicle and Equipment Fueling (T9a)

Description:

When vehicle and equipment fueling takes place at a maintenance facility there is the potential for fuel to be leaked or spilled at the site. The BMPs for vehicle and equipment fueling (see "BMP Implementation" below) are designed to minimize contact between storm water runoff and spilled fuel, oil, or other leaked vehicle fluids at equipment fueling areas.

Appropriate Applications:

These procedures should be implemented at maintenance facility equipment-fueling areas.

BMP Implementation:

- See Cleaning (Section 2.2.1).
- See Safer Alternative Products (Section 2.2.2).
- Spill Prevention Controls and Countermeasures (SPCC) Plans are required for fueling areas.
- Underground storage tank regulations addressing containment design and spill response will be implemented.
- Spills should be cleaned up. For example, use absorbent material or dry mop method. Place absorbent material collected by sweeping into a waste container.
- A supply of spill cleanup materials and spill control equipment should be kept near fueling areas to cleanup spills.
- Proper fueling and spill cleanup instructions should be posted at fueling areas.
- Automatic shutoff valves should be installed at each pump, and manual shutoff valves should be installed inside shop buildings.

- See Protection of Drainage Paths, Drain Inlets and Watercourses (Section 2.2.3).
- See Solid Waste and Liquid Waste Management (Section 2.2.5).
- Avoid hosing off fueling areas.
- Inspect portable fueling tanks regularly for cracks and leaks. Repair as necessary.

Vehicle and Equipment Pressure Washing (T9b)

Description:

When vehicle and equipment pressure washing is conducted at a maintenance facility it is essential that the wash water not be discharged to storm water drainage systems. Alternative disposal methods include recycling or discharge to a sanitary sewer system. Proper vehicle and equipment pressure washing minimizes contact between storm water runoff and the equipment washing area and ensures that the wash water is not discharged to drainage paths, storm water drainage systems or watercourses.

Appropriate Applications:

These BMPs (see "BMP Implementation" below) are applicable to all pressure washing operations for vehicles and equipment. Some municipalities may require permits, pretreatment and/or monitoring of wash water discharges.

BMP Implementation:

Vehicle and equipment pressure-washing activities should be located within a structure or building equipped with a connection to the sanitary sewer system or a closed-loop system. If a washing area must be located outside, the area should have the following characteristics:

- See Cleaning (Section 2.2.1).
- See Safer Alternative Products (Section 2.2.2).
- The area should be surrounded by berms or graded to minimize contact with storm water running onto the area.
- The area should be paved with concrete (all upgrades and new areas will be concrete).
- The pressure washing area should drain to a dead-end sump or directly into the sanitary sewer system.
- See Protection of Drainage Paths, Drain Inlets and Watercourses (Section 2.2.3).
- See Solid Waste and Liquid Waste Management (Section 2.2.5).

Other procedures include:

- Designate an area for pre-wash of vehicles and equipment to capture solid materials and to contain the wash water.
- Vehicle and equipment washing areas should be inspected periodically.
- The sump should be serviced regularly.
- See Maintenance Facility Housekeeping Practices (Section 2.2.4).

Vehicle and Equipment Maintenance and Repair (T9c)

Description:

Vehicle and equipment maintenance and repair includes vehicle fluid removal, engine and parts cleaning, body repair, and painting. These BMPs (see "BMP Implementation" below) are intended to reduce the discharge of potential pollutants from areas in which vehicle maintenance and repair activities are conducted by employing controls that minimize contact between storm water and the activity areas and products used in each activity.

Appropriate Applications:

These BMPs are applicable to maintenance personnel who are involved in vehicle and equipment maintenance and repair activities both at maintenance facilities and in the field.

BMP Implementation:

General

- See Cleaning (Section 2.2.1).
- See Safer Alternative Products (Section 2.2.2).
- See Maintenance Facility Housekeeping Practices (Section 2.2.4).
- See Solid Waste and Liquid Waste Management (Section 2.2.5).

Vehicle Fluid Removal

- Use drip pans where required.

Engine and Parts Cleaning

- Use self-contained parts cleaners which have secondary containment when working with solvents. Degreasing solvent tanks are equipped with secondary containment.

- Allow parts to drain into the parts cleaner.
- Allow parts to dry over the hot tank, if available. If rinsing is required, rinse over the hot tank.
- Do not wash or rinse parts outdoors.
- See Cleaning (Section 2.2.1).

Damaged Vehicles

- When receiving damaged vehicles from CHP, inspect for fluid leaks and prevent from entering storm drainage system.

Drain Control

- See Cleaning (Section 2.2.1).
- See Protection of Drainage Paths, Drain Inlets and Watercourses (Section 2.2.3).
- Keep spill control equipment and covers available to protect external drain inlets.

Aboveground and Underground Tank Leak and Spill Control (T9d)

Description:

Maintenance facilities often use aboveground storage tanks for storage of bulk quantities of liquids. Often the liquids stored are potentially harmful to the environment. These BMPs (see "BMP Implementation" below) are intended to reduce the discharge of potential pollutants to storm water drainage systems or watercourses from aboveground storage tanks by installing safeguards against accidental releases.

Appropriate Applications:

These BMP should be implemented at all aboveground and underground storage tank locations by personnel responsible for aboveground storage tank operation, inspection and maintenance.

BMP Implementation:

- See Cleaning (Section 2.2.1).
- See Safer Alternative Products (Section 2.2.2).
- Refer to Vehicle and Equipment Fueling (T9a) for aboveground and underground fuel tanks.
- Inspect existing aboveground storage tanks, secondary containment, and associated valves and piping for external corrosion, structural failure and loose connections.

- Keep an appropriate spill kit near above ground tanks. Update and replenish the spill kit as changes occur in the types of materials stored.
- All spills should be controlled immediately. Absorbent material should be collected in a waste container and disposed according to approved waste disposal procedures.
- Inspect rainwater in secondary containment prior to releasing to ensure pollutants do not enter the storm drain system.
- After releasing rainwater from secondary containment, ensure that drain valve is closed.
- See Maintenance Facility Housekeeping Practices (Section 2.2.4).
- See Solid Waste and Liquid Waste Management (Section 2.2.5).
- See Perform Work in Dry Weather (Section 2.2.6).

Storm Drain Stenciling (T10)

Description:

Stenciled messages to storm drain inlets are intended to educate the public about runoff pollution. Warnings prohibiting discharges to storm drains will be placed near the inlet structures.

Appropriate Applications:

Storm drain stenciling is approved for Park-and-Ride lots, safety roadside rest areas, vista points and commercial vehicle enforcement facilities.

BMP Implementation:

- See Cleaning (Section 2.2.1).
- See Safer Alternative Products (Section 2.2.2).
- See Solid Waste and Liquid Waste Management (Section 2.2.5).
- See Perform Work in Dry Weather (Section 2.2.6).
- Warnings to discourage illegal discharges will be stenciled onto or adjacent to drain inlets where appropriate. The goal is to increase public awareness of how rainfall runoff can carry litter, car debris, motor oil and other contaminants into waterways.
- Stenciling will be inspected and replaced when unreadable.

3.1 DESIGN POLLUTION PREVENTION BMPs (CATEGORY IB)

This section lists and describes those BMPs that are considered during the planning and design phases of projects. Permanent measures are those that provide storm water quality management after construction is completed. Some BMPs have both permanent and temporary applications, and may also have applications to several different temporary categories. The pollution prevention BMPs that are to be incorporated, as appropriate, into the design of new facilities and reconstruction or expansion of existing facilities are listed in Table 3-1.

TABLE 3-1: DESIGN POLLUTION PREVENTION BMPs

Consideration of Downstream Effects Related to Potentially Increased Flow
Preservation of Existing Vegetation
Concentrated Flow Conveyance Systems
Ditches, Berms, Dikes and Swales
Overside Drains
Flared Culvert End Sections
Outlet Protection/Velocity Dissipation Devices
Slope/Surface Protection Systems
Vegetated Surfaces
Hard Surfaces

3.2 REQUIRED MINIMUM DESIGN ELEMENTS FOR STORM WATER CONTROL

All projects must incorporate certain minimum design elements with respect to water quality concerns. These design goals include the following:

1. *Minimize Impervious Surfaces:* The intent of this goal is to reduce the volume of runoff (see Section 3.3).
2. *Prevent Downstream Erosion:* Storm water drainage systems will be designed to avoid causing or contributing to downstream erosion.
3. *Stabilize Disturbed Soil Areas:* Disturbed soil areas will be appropriately stabilized as discussed in Section 4.
4. *Maximize Vegetated Surfaces Consistent with Existing Caltrans Policies:* Vegetated surfaces prevent erosion, promote infiltration (which reduces runoff), and remove pollutants from storm water.

In addition, project design staff will implement the appropriate pollution prevention BMPs described in the following sections.

3.3 DESIGN POLLUTION PREVENTION BMPs (CATEGORY IB)

3.3.1 Consideration of Downstream Effects Related to Potentially Increased Flow

Description:

Total paved area is kept to a practical minimum to limit maintenance costs and impervious area (to minimize runoff).

Appropriate Applications:

During the design of both new and reconstructed facilities, Caltrans may include new road surfaces or additional surface paving to enhance the operational safety and functionality of the facility.

Implementation:

Changes in the velocity or volume of runoff, the sediment load or other hydraulic changes from stream encroachments, crossings or realignment may affect downstream channel stability. If these changes result in an increased potential for downstream effects in channels, Caltrans will consider the following:

- Modifications to channel lining materials (both natural and man-made), including vegetation, geotextile mats, rock and riprap;
- Energy dissipation devices at culvert outlets;
- Smoothing the transition between culvert outlets/headwalls/wingwalls and channels to reduce turbulence and scour; and
- Incorporating retention or detention facilities into designs to reduce peak discharges.

Caltrans will implement appropriate measures to ensure that runoff from Caltrans facilities will not significantly increase downstream effects.

3.3.2 Preservation of Existing Vegetation

Description:

Preservation of existing vegetation is the identification and protection of desirable vegetation that provides erosion and sediment control benefits.

Appropriate Applications:

Caltrans will preserve existing vegetation at areas on a site where no construction activity is planned or will occur at a later date.

Implementation:

The following general steps should be taken to preserve existing vegetation:

- Identify and delineate in contract documents all vegetation to be retained and mark in the field prior to the start of adjacent soil-disturbing activities.
- Mark areas to be preserved with orange polypropylene temporary fencing.
- Minimize disturbed areas by locating temporary roadways to avoid stands of trees and shrubs and to follow existing contours to reduce cutting and filling.
- When removing vegetation, consider impacts (increased exposure or wind damage) to the adjacent vegetation that will be preserved.

3.3.3 Concentrated Flow Conveyance Systems

Concentrated flow conveyance systems consist of permanent design measures that are used alone or in combination to intercept and divert surface flows, and convey and discharge concentrated flows with a minimum of soil erosion, both on-site and downstream (off-site). Temporary controls for storm water run-on and conveyance of concentrated flows are discussed in Section 4.3.3 of the Guidelines.

Ditches, Berms, Dikes and Swales

Description:

These are permanent devices typically used to intercept and direct surface runoff to an overside (or slope) drain or stabilized watercourse.

Appropriate Applications:

Ditches, berms, dikes and swales are typically implemented:

- At the top of slopes to divert run-on from adjacent slopes and areas;
- At bottom and mid-slope locations to intercept sheet flow and convey concentrated flows;
- At other locations to convey runoff to overside drains, stabilized watercourses, and storm water drainage system inlets (catch basins), pipes and channels;
- To intercept runoff from paved surfaces; or
- Along roadways and facilities subject to flood drainage.

Implementation:

- Select design flow and safety factors based on careful evaluation of risks due to erosion, overtopping, flow backups or washout.
- Consider outlet protection where localized scour is anticipated.
- Examine the site for run-on from off-site sources.
- Consider order of work provisions to install and utilize permanent dikes, swales and ditches early in the construction process.
- Conveyances must be lined when velocities exceed allowable limits for soil. Consider use of riprap, engineering fabric, vegetation, asphalt concrete or concrete.
- Conceptual ditches, berms, dikes and swales are shown in Figure 3-1.

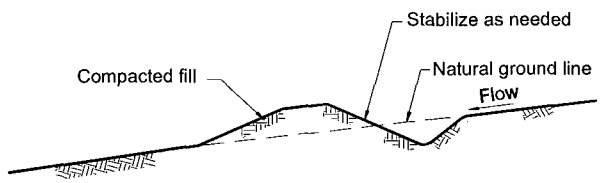

Conceptual Diversion Ditch/Drainage Swale
Not to Scale

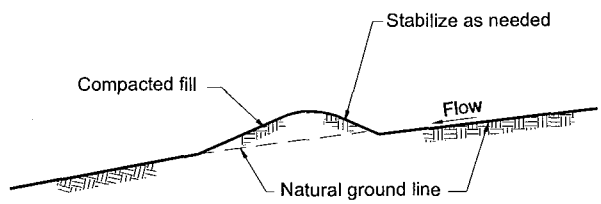

Conceptual Diversion Dike/Berm
Not to Scale

Fig_3-1.DWG JAC 7/24/00

Note: Actual layout determined by design.

Figure 3-1
Conceptual Ditches, Berms, Dikes and Swales

Overside Drains

Description:

Overside drains are pipes, flumes or asphalt concrete drains used to protect slopes against erosion by collecting surface runoff from the roadbed, the tops of cuts or from benches in cut or fill slopes, and conveying it down the slope to a stabilized drainage ditch or area.

Appropriate Applications:

Overside drains are typically used at sites where slopes may be eroded by surface runoff.

Implementation:

- Pipe downdrains are metal pipes adaptable to any slope. They should be considered where side slopes are 1:4 or steeper.
- Flume downdrains are rectangular corrugated metal flumes with a tapered entrance. They are best adapted to slopes that are 1:2 or flatter.
- Pipe and flume downdrains shall be securely anchored to the slope.
- Paved spillways are recommended on side slopes flatter than 1:4. On steeper slopes, a more positive type of overside drain (such as a pipe downdrain) should be used.
- Drainage from benches in cut and fill slopes should be removed at intervals ranging from 100 to 150 meters.
- A conceptual overside drain is shown in Figure 3-2.

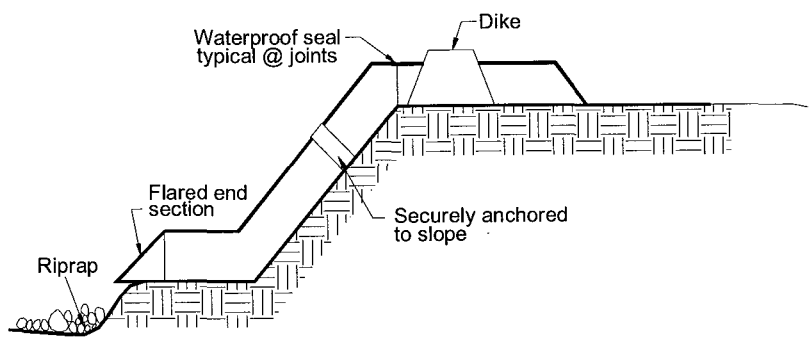

Note: Actual layout determined in the field

Figure 3-2
Conceptual Overside Drain

Flared Culvert End Sections

Description:

These are devices typically placed at inlets and outlets of pipes and channels to improve the hydraulic operation, retain the embankment near pipe conveyances, and to help prevent scour and minimize erosion at these inlets and outlets.

Appropriate Applications:

Use flared culvert end sections at outlets and inlets of slope drains and culverts.

Implementation:

- At outlets, use with other outlet protection/velocity dissipation devices.
- A conceptual flared culvert end section is shown in Figure 3-3.

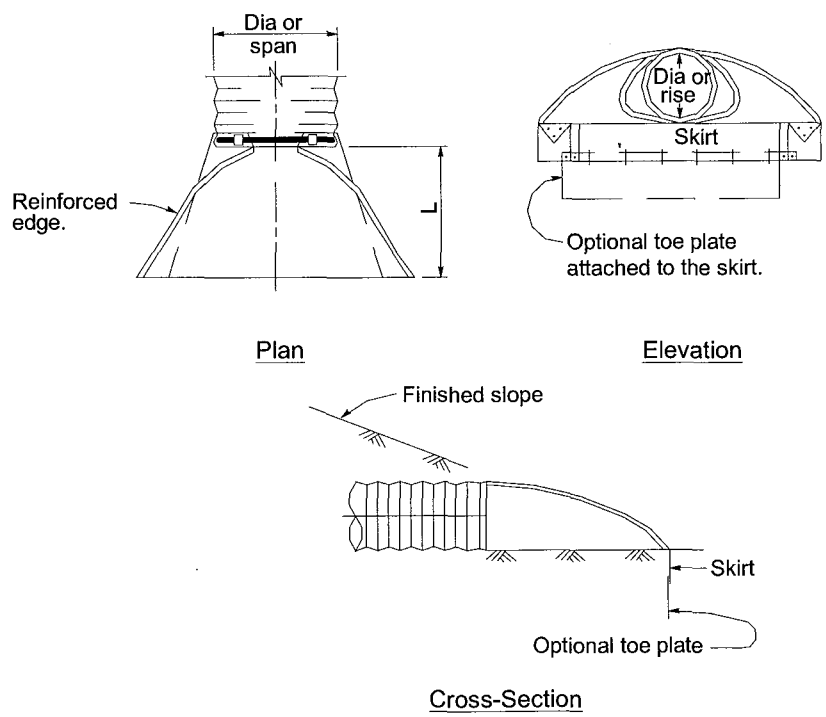

Note: Actual layout determined by design.

Figure 3-3
Conceptual Flared Culvert End Section

Outlet Protection/Velocity Dissipation Devices

Description:

These devices are typically placed at pipe outlets to prevent scour and reduce the velocity and/or energy of exiting storm water flows.

Appropriate Applications:

These devices are typically used at the outlets of pipes, drains, culverts, slope drains, diversion ditches, swales, conduits or channels, where localized scouring is anticipated.

Implementation:

- Install riprap, grouted riprap, or concrete apron at selected outlet.
- Apron length is related to outlet flow rate and tailwater level.
- For proper operation of apron, align apron with receiving stream and keep straight throughout its length.
- A conceptual outlet protection/velocity dissipation device is shown in Figure 3-4.

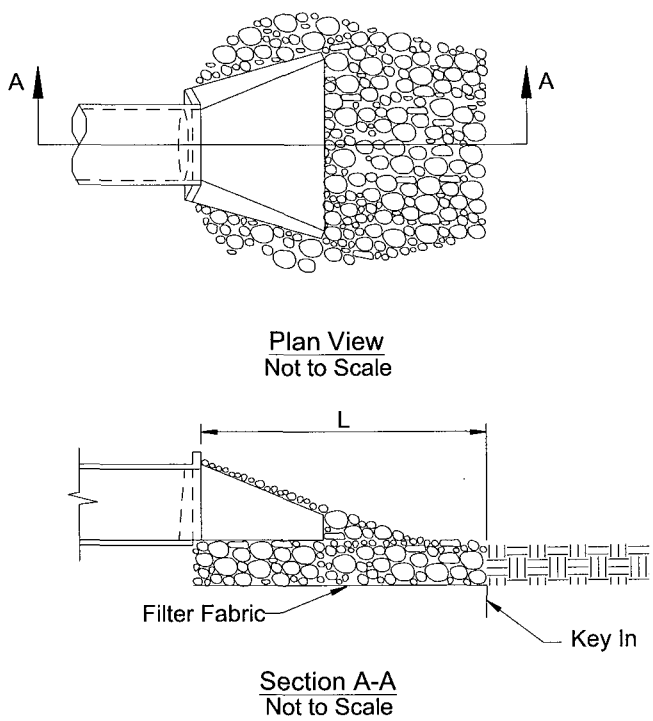

Figure 3-4
Conceptual Outlet Protection/ Velocity Dissipation Device

3.3.4 Slope/Surface Protection Systems

Surface protection consists of a system of permanent design measures that are used alone or in combination to minimize erosion from completed, disturbed surfaces. Vegetated surfaces may offer several advantages to paved surfaces, including lower runoff volumes and slower runoff velocities, increased times of concentration and lower cost. However, where site or slope-specific conditions would prevent adequate establishment and maintenance of a vegetative cover, hard surfacing should be considered.

Vegetated Surfaces

Description:

A vegetated surface is the establishment of a permanent perennial vegetative cover on areas that have been disturbed by construction. The purpose of a vegetated surface is to prevent erosion and remove pollutants in storm water and non–storm water runoff.

Appropriate Applications:

Vegetated surfaces should be established on areas of disturbed soil that are complete or nearly complete and that can support the selected vegetation.

Implementation:

Adhere to the following typical steps to implement vegetated surfaces:

- The site should first be evaluated to select the appropriate vegetation and planting strategy. The site evaluation should consider soil type and condition; site topography; climate and season; types of appropriate native and adapted vegetation suited to the site; and maintenance.
- Vegetated surfaces shall be designed to minimize overland and concentrated flow depths and velocities, and maximize contact time between water and vegetated surfaces. This will enhance infiltration and pollutant removal opportunities.
- When determined feasible, strip and stockpile topsoil during construction. Use stockpiled materials in the surface preparation prior to seeding operations.
- Roughen the surface of the slope or area to be seeded.
- Typical application rates are 2 to 3 tons per acre.
- After planting seeds, apply protective mulch, erosion control blanket, or other protective cover.
- Application of seed optimally would occur between 30 days prior to start of rainy season and 30 days after start of rainy season.

- Application of seed should occur between 30 days prior to the rainy season and 30 days prior to the end of the rainy season.
- Long term maintenance of these vegetated surfaces are discussed in Section 2.7 of these Guidelines and in Section 5.3.4 of the Statewide SWMP.
- Slope Roughening/Terracing/Rounding
  - Roughening and terracing are techniques for creating furrows, terraces, serrations, stair-steps or track-marks on the soil surface to increase the effectiveness of temporary and permanent soil stabilization practices. Slope rounding is a design technique to minimize the formation of concentrated flows.
  - Use on embankment or cut slopes, prior to the application of temporary soil stabilization or permanent seeding.
  - Slope roughening, terracing, and rounding should be implemented conceptually as shown in Figure 3-5.

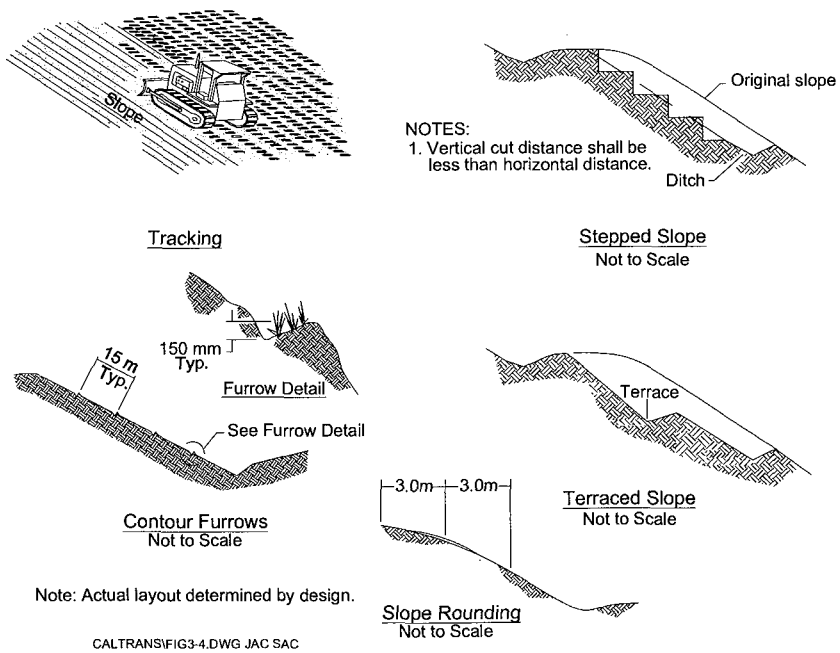

Figure 3-5
Conceptual Slope Roughening, Terracing and Rounding

Hard Surfaces

Description:

Hard surfaces consist of placing concrete, rock, or rock and mortar slope protection.

Appropriate Applications:

Apply on disturbed soil areas where vegetation would not provide adequate erosion protection.

Implementation:

- Rock Slope Protection
  - Rock slope protection consists of placing revetment-type rock courses.
  - Remove loose, sharp, or extraneous material from the slope to be treated.
  - Place underlayment fabric loosely over the surface so that the fabric conforms to the surface without damage. Equipment or vehicles should not be driven directly on the fabric.
  - Excavate a footing trench along the toe of the slope.
  - Local surface irregularities should not vary from the planned slope by more than 0.3 meters as measured at right angles to the slope.
- Rock and Mortar Slope Protection
  - If the rocks are to be grouted in place with concrete, the rocks should be cleaned of any adhering dirt or clay and then moistened. The concrete should be placed with buckets, chutes, tubes, pneumatic equipment, or other mechanical means and then spaded and rodded into place to ensure adequate penetration. After the concrete has been placed, the rocks should be thoroughly brushed so that their top surfaces are exposed.
- Concrete Slope Protection
  - Concrete slope protection consists of constructing Portland concrete cement or shotcrete slope paving under the ends of bridges and at other locations.
  - Foundation areas should be evenly graded and thoroughly compacted, with moisture sufficient to allow a firm foundation and to prevent absorption of water from the concrete or mortar.

Work should be scheduled so that the work (including placing, finishing, and application of curing compound) between timber borders is started and completed in the same day. There should not be any construction joints between timber spacers.

4.1 CONSTRUCTION SITE BMPs (CATEGORY II)

This section lists and describes those BMPs considered during the construction of Caltrans projects. They are best conventional technology/best available technology (BCT\BAT)-based temporary control practices that are consistent with the BMPs and control practices required under the State of California NPDES General Permit for Storm Water Discharges Associated with Construction Activity. Temporary control practices include soil stabilization, sediment control, wind erosion control, tracking control, non–storm water control and waste management and materials pollution control.

Table 4-1 lists the construction site BMPs and their potential applications. BMP inspection requirements are identified in Section 4.2. Guidance and general principles for implementing soil stabilization and sediment control BMPs on disturbed soil areas are discussed in Section 4.3. Guidance for selecting and implementing wind erosion controls, tracking controls, non–storm water, and waste management and materials pollution controls are addressed in Section 4.4. BMPs are described in Section 4.5.

TABLE 4-1: CONSTRUCTION SITE STORM WATER POLLUTION PREVENTION BMPs AND APPLICATIONS

Best Management Practices	Page Number of This Section	Construction Site BMPs (Category II)					
		Soil Stabilization Practices	Sediment Control Practices	Wind Erosion Control	Tracking Control Practices	Non-Storm Water Control	Waste Management and Materials Pollution Control
Temporary Sediment Control	4-12						
Silt Fence	4-12		X				
Sandbag Barrier	4-14		X				
Straw Bale Barrier	4-16		X				
Fiber Rolls	4-18	X	X				
Gravel Bag Berm	4-19	X	X				
Check Dam	4-20	X	X				
Desilting Basin	4-22		X				
Sediment Trap	4-24		X				
Sediment Basin	4-25		X				
Temporary Soil Stabilization	4-26						
Hydraulic Mulch	4-26	X		X			
Hydroseeding	4-27	X		X			
Soil Binders	4-27	X		X			
Straw Mulch	4-29	X		X			
Geotextiles, Mats/Plastic Covers and Erosion Control Blankets	4-29	X		X			
Scheduling	4-32	X	X	X	X	X	X
Preservation of Existing Vegetation	4-32	X	X	X			
Temporary Concentrated Flow Conveyance Controls	4-33						
Earth Dikes/Drainage Swales & Lined Ditches	4-33	X					
Outlet Protection/Velocity Dissipation Devices	4-35	X					

TABLE 4-1: CONSTRUCTION SITE STORM WATER POLLUTION PREVENTION BMPs AND APPLICATIONS

Best Management Practices	Page Number of This Section	Construction Site BMPs (Category II)					
		Soil Stabilization Practices	Sediment Control Practices	Wind Erosion Control	Tracking Control Practices	Non-Storm Water Control	Waste Management and Materials Pollution Control
Slope Drains	4-37	X					
Temporary Stream Crossing	4-38	X					
Clear Water Diversion	4-40	X				X	
Wind Erosion Control	4-42			X			
Sediment Tracking Control	4-43						
Street Sweeping and Vacuuming	4-43				X		
Stabilized Construction Roadway	4-43	X		X	X		
Entrance/Outlet Tire Wash	4-44				X		
Waste Management	4-45						
Spill Prevention and Control	4-46						X
Solid Waste Management	4-47						X
Hazardous Waste Management	4-48						X
Contaminated Soil Management	4-49						X
Concrete Waste Management	4-52						X
Sanitary/Septic Waste Management	4-54						X
Liquid Waste Management	4-54						X
Materials Handling	4-55						
Material Delivery and Storage	4-55						X
Material Use	4-57						X
Vehicle and Equipment Operations	4-58						
Vehicle and Equipment Cleaning	4-58						X
Vehicle and Equipment Fueling	4-59						X
Vehicle and Equipment Maintenance	4-59						X
Paving Operations	4-60						X
Stockpile Management	4-61						X
Water Conservation Practices	4-62					X	
Potable Water/Irrigation	4-63			X			X
Dewatering Operations	4-63					X	
Illicit Connection/Illegal Discharge Detection and Reporting	4-66					X	
Storm Drain Inlet Protection	4-66		X				
Stabilized Construction Entrance / Exit	4-67				X		

See Section 4.6, Best Management Practices: Further Research Needed.

4.2 BMP INSPECTIONS

The temporary control practices deployed on construction sites will be regularly inspected. Improperly installed or damaged practices shall be corrected immediately or by a later date and time if requested by the contractor and approved by the Resident Engineer (RE) in writing, but not later than the onset of subsequent rain events. Inspections of the construction site for temporary control practices are conducted as follows:

- Prior to a forecast storm;
- After a rain event that causes runoff from the construction site; and
- At 24-hour intervals during extended rain events.

4.3 TEMPORARY SOIL STABILIZATION AND SEDIMENT CONTROL IMPLEMENTATION GUIDANCE

Storm water pollution control requirements are intended to be implemented on a year-round basis at an appropriate level. The requirements must be implemented in a proactive manner during all seasons while construction is ongoing. California has varied rainfall patterns throughout the state; therefore, the appropriate level of BMP implementation will also vary throughout the state. The temporary sediment controls and soil stabilization specified in this section are based on rainfall patterns (time frames, intensities, and amounts), general soil types, the seasons, slope inclinations and slope lengths. Appropriate water pollution control includes the implementation of an effective combination of both erosion and sediment controls.

This section describes both general principals and specific guidance for selecting and implementing soil stabilization and sediment control BMPs. Sections 4.3.1, 4.3.2, and 4.3.3 provide key principles for preventing erosion on construction sites. Section 4.3.4 provides specific guidance for selecting and implementing soil stabilization and sediment control BMPs to manage disturbed soil areas.

4.3.1 Scheduling

Construction scheduling shall consider the amount and duration of soil exposed to erosion by wind, rainfall, runoff and vehicle tracking and seek to minimize disturbed soil area in the rainy season. A schedule shall be prepared that shows the sequencing of construction activities with the installation of erosion and sediment control BMPs. See Section 4.5.3 of the Guidelines for BMP details.

4.3.2 Preservation of Existing Vegetation

Preserving existing vegetation to the maximum extent possible and for as long as possible on a construction site reduces or eliminates erosion in those areas. To facilitate this practice, on a year-round basis temporary fencing shall be provided prior to commencement of clearing and grubbing operations or other soil-disturbing activities in areas where no construction activity is

planned or construction will occur at a later date. See Section 4.5.4 of the Guidelines for BMP details.

4.3.3 Storm Water Run-on and Concentrated Flows

The diversion of storm water run-on and conveyance of concentrated flows must be considered in determining the appropriateness of the BMPs chosen. BMPs to divert or manage concentrated flows in a non-erodible fashion may be required on a project-by-project basis to divert off-site drainage through or around the construction site or to properly manage construction site storm water runoff. See Section 4.5.5 of the Guidelines for BMP details.

4.3.4 Disturbed Soil Area Management

These disturbed soil area management guidelines are based on rainfall patterns (time frames, intensities, and amounts), general soil types, the seasons, slope inclinations, and slope lengths. All of these factors are considered in developing the appropriate levels of soil stabilization and sediment control, and will be considered by the RE when directing specific site-by-site actions.

4.3.4.1 Definitions

Disturbed Soil Area

Disturbed soil areas (DSAs) are areas of exposed, erodible soil that are within the construction limits and that result from construction activities. The following are not considered DSAs:

- Areas where soil stabilization, erosion control, highway planting, or slope protection are applied and associated drainage facilities are in place and functional.
- Roadways, construction roads, access roads or contractor's yards that have been stabilized by the placement of compacted subbase or base material or paved surfacing.
- Areas where construction has been completed in conformance with the contract plans and permanent erosion control is in place and functional.

Erosion control is considered functional when a uniform vegetative cover equivalent to 70 percent of the native background vegetation coverage has been established or equivalent stabilization measures have been employed.

Active and Nonactive Areas

Active areas are construction areas where soil-disturbing activities have already occurred and continue to occur or will occur during the ensuing 21 days.

Nonactive areas are construction areas (formerly active areas) that will be idle for at least 21 days.

The RE will conduct a review of the existing active areas on a regular basis to determine if a nonactive status should be applied to some DSAs.

Slope Length and Benches

Slope length is measured or calculated along a continuous inclined surface. Each discrete slope is between one of the following: top to toe, top to bench, bench to bench, and bench to toe.

Benches are drainage facilities that intercept surface flow and convey the resulting concentrated flow away from a slope. For the purpose of determining slope lengths, fiber rolls or other appropriate BMPs (used for temporary sediment control) can be considered equivalent to a bench.

Rainy Season

The average rainfall in California varies greatly from region to region. To account for the various rainfall patterns (time frame, intensities, and amounts) the state is separated into several rainy seasons. Figure 4-1 is a map identifying the rainy seasons throughout the state. These rainy seasons are used to identify the appropriate level of soil stabilization and sediment control protection.

4.3.4.2 DSA Protection by Temporary Soil Stabilization and Sediment Controls

To account for rainfall patterns (time frames, intensities, and amounts) and to a lesser extent general soil type differences, the state has been divided into seven areas requiring common protection requirements. These rainfall areas are defined in Table 4-2. The specific temporary erosion and sediment control practices for DSA protection in each area are determined from Tables 4-3 and 4-4. Based on consultation with experts, the slope length and slope inclination are seen as the most important criteria for soil stabilization and sediment control requirements, as these factors have the largest potential impact on the erosion rate. As indicated on these tables, the temporary erosion and sediment controls at a construction site will increase with increasing slope length and slope inclination combination.

DSAs shall be protected as follows:

- Temporary control practices (as required in Table 4-3) shall be performed on nonactive DSAs within 14 days from the cessation of soil-disturbing activities or one day prior to the onset of precipitation, whichever occurs first.
- Temporary control practices for active DSAs (as required in Table 4-4) shall be performed prior to the onset of precipitation and throughout each day for which precipitation is forecasted.
- For nonactive DSAs, limit the erosive effects of storm water flow on slopes by implementing BMPs such as fiber rolls or gravel bag berms to break up the slope lengths as follows:

- Slope inclination between 1:20 and 1:2: BMPs shall be placed on slopes 30m and greater at intervals no greater than 15m.
- Slope inclination 1:2 or greater: BMPs shall be placed on slopes 15m and greater at intervals no greater than 7.5m.

- For nonactive DSAs, permanent erosion control shall be applied to areas deemed substantially complete during the project's defined seeding window.

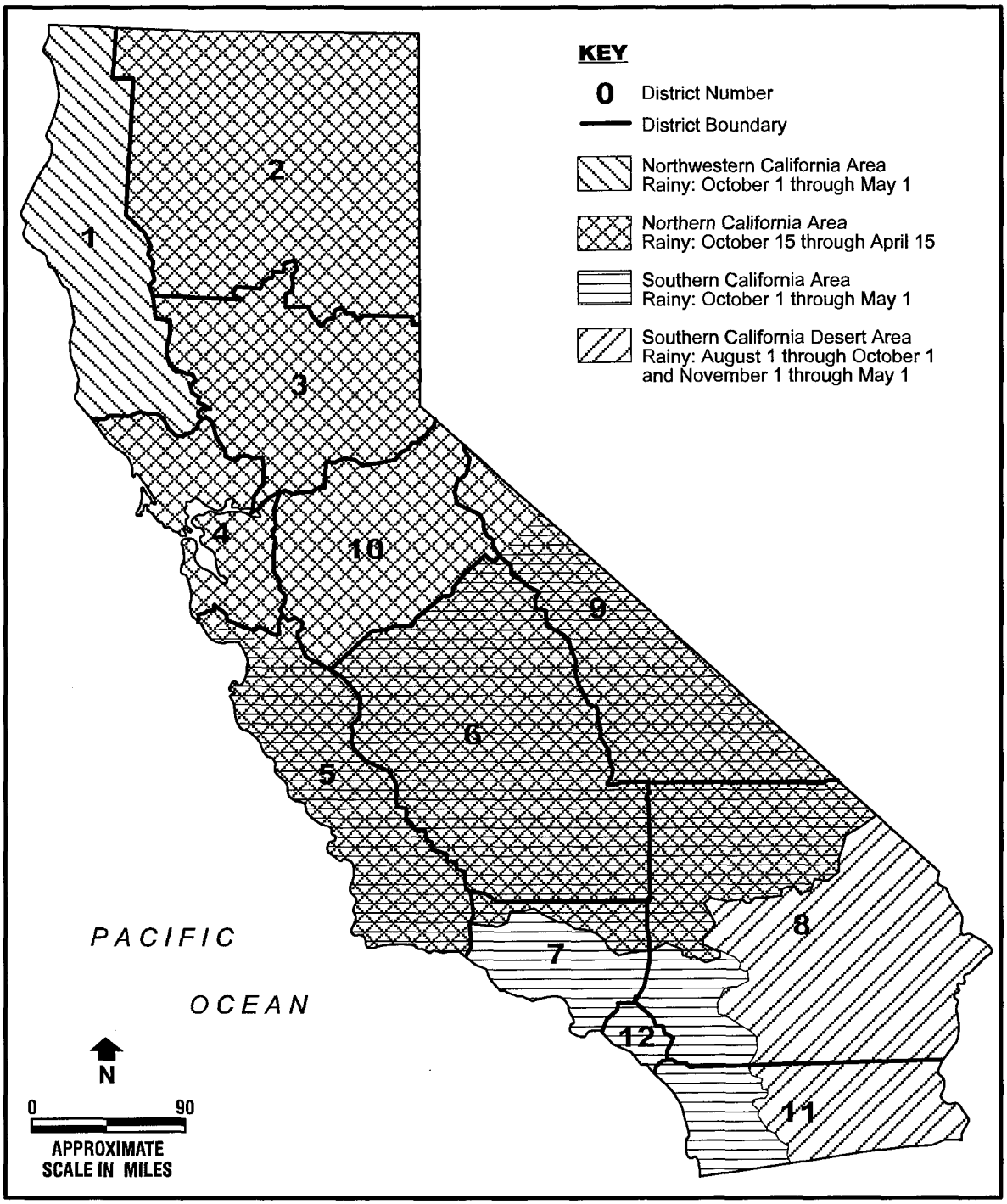

Figure 4-1
DESIGNATION OF RAINY SEASONS

TABLE 4-2: RAINFALL AREA DEFINITIONS

AREA	DESCRIPTION	
	Applicability	**Elevation**
1	District 1 in the following areas: all of Del Norte and Humboldt Counties within 20 miles of the coast in Mendocino County	≤1200m
2	District 1 (except within Area 1) District 2 within the North Coast and Central Valley RWQCB jurisdictions Districts 3, 4 and 5	<250 m
3	District 1 (except within Area 1) District 2 within the North Coast and Central Valley RWQCB jurisdictions Districts 3, 4 and 5	250m–1200m
4	District 6 within the Central Valley RWQCB jurisdiction District 7 - within the Central Coast, Los Angeles, and Central Valley RWQCB jurisdictions District 8 within the Santa Ana and San Diego RWQCB jurisdictions District 10 District 11 within the San Diego RWQCB jurisdiction District 12	<500m
5	District 6 within the Central Valley RWQCB jurisdiction District 7 within the Central Coast, Los Angeles, and Central Valley RWQCB jurisdictions District 8 within the Santa Ana and San Diego RWQCB jurisdictions District 10 District 11 within the San Diego RWQCB jurisdiction District 12	500m–1200m
6	Statewide	> 1200m
7	District 6 within the Lahontan RWQCB jurisdiction District 7 within the Lahontan RWQCB jurisdiction District 8 within the Lahontan and Colorado River Basin RWQCB jurisdictions District 9 within the Lahontan RWQCB jurisdiction District 11 within the Colorado River Basin RWQCB jurisdiction	≤1200m

TABLE 4-3: RECOMMENDED COMBINATION OF TEMPORARY SOIL STABILIZATION AND TEMPORARY LINEAR SEDIMENT BARRIERS (7)

NONACTIVE DISTURBED SOIL AREAS						
SEASON	AREA DESIG.	TEMPORARY BMP	SLOPE (V:H)(1)			
			≤ 1:20	> 1:20 ≤ 1:4	> 1:4 ≤ 1:2	> 1:2
RAINY	AREAS 1 & 6	SOIL STABILIZATION (5)	X	X	X	X
		LINEAR SEDIMENT BARRIER (2)(5)	X	X	X	X
		DESILTING BASIN (3)		X	X	X
	AREAS 2, 3, 4 & 5	SOIL STABILIZATION (5)	X	X	X	X
		LINEAR SEDIMENT BARRIER (2)		X	X	X
		DESILTING BASIN				
	AREA 7	SOIL STABILIZATION				
		LINEAR SEDIMENT BARRIER (2)(6)	X	X	X	X
		DESILTING BASIN				
NON-RAINY	AREA 1	SOIL STABILIZATION (5)	X (4)	X (4)	X	X
		LINEAR SEDIMENT BARRIER (2)		X (4)	X	X
		DESILTING BASIN				
	AREAS 2, 4 & 7	SOIL STABILIZATION				
		LINEAR SEDIMENT BARRIER				
		DESILTING BASIN				
	AREAS 3 & 5	SOIL STABILIZATION				
		LINEAR SEDIMENT BARRIER (2)				X
		DESILTING BASIN				
	AREA 6	SOIL STABILIZATION (5)	X (4)	X (4)	X	X
		LINEAR SEDIMENT BARRIER (2)		X (4)	X	X
		DESILTING BASIN (3)				X

1. Unless otherwise noted, the temporary BMP is required for the slope inclinations indicated on slope lengths greater than 3 meters. The maximum slope length is 30 meters for slope inclinations between 1:20 and 1:2 and 15 meters for steeper slopes.
2. Temporary desilting basin may be implemented in lieu of temporary linear sediment barrier if both are not specifically required by note 3.
3. Required in addition to the temporary linear sediment barrier, where feasible. Feasibility will depend on site-specific factors such as available right-of-way within the project limits, topography, soil type, disturbed soil area within watershed, and climate conditions.
4. Implementation of controls not required except directly prior to predicted rain.
5. The indicated temporary BMP is required on all slope lengths.
6. For disturbed soil areas that are within 5 miles of the Salton Sea or the Colorado River and also within 150 meters of a permanent or intermittent stream as identified on an USGS quad map, the temporary BMPs indicated will be required.
7. Linear barrier systems are equivalent to what are sometimes referred to as perimeter systems. The intent is to provide a barrier to the transport of sediment at the downslope edge of soil disturbed areas.
8. Permanent erosion control seeding shall be applied during the defined seeding window to all nonactive areas deemed substantially complete.

TABLE 4-4: RECOMMENDED COMBINATION OF TEMPORARY SOIL STABILIZATION AND TEMPORARY LINEAR SEDIMENT BARRIERS [8]

ACTIVE DISTURBED SOIL AREAS [4]					
SEASON	AREA DESIG.	TEMPORARY BMP	SLOPE (V:H) [1]		
			≤ 1:20	> 1:20 ≤ 1:2	> 1:2
RAINY	AREAS 1 & 6	SOIL STABILIZATION		X	X
		LINEAR SEDIMENT BARRIER [2] [5]	X	X	X
		DESILTING BASIN [3]		X	X
	AREAS 2, 4 & 5	SOIL STABILIZATION			
		LINEAR SEDIMENT BARRIER [2]		X	X
		DESILTING BASIN [3]			X [6]
	AREA 3	SOIL STABILIZATION			X [6]
		LINEAR SEDIMENT BARRIER [2]		X	X
		DESILTING BASIN [3]			X [6]
	AREA 7	SOIL STABILIZATION			
		LINEAR SEDIMENT BARRIER [2] [7]	X	X	X
		DESILTING BASIN			
NON-RAINY	AREA 1	SOIL STABILIZATION			
		LINEAR SEDIMENT BARRIER [2]		X	X
		DESILTING BASIN [3]			X [6]
	AREAS 2, 3, 4, 5 & 7	SOIL STABILIZATION			
		LINEAR SEDIMENT BARRIER			
		DESILTING BASIN			
	AREA 6	SOIL STABILIZATION			
		LINEAR SEDIMENT BARRIER [2]		X	X
		DESILTING BASIN [3]			X

1. Unless otherwise noted, the BMP is required for the slope inclinations indicated on slope lengths greater than 3 meters.
2. Temporary desilting basin may be implemented in lieu of temporary linear sediment barrier if both are not specifically required by note 3.
3. Required in addition to the temporary linear sediment barrier, where feasible. Feasibility will depend on site-specific factors such as available right-of-way within the project limits, topography, soil type, disturbed soil area within watershed, and climate conditions.
4. *Implementation of controls not required except directly prior to predicted rain.*
5. The indicated temporary BMP is required on all slope lengths.
6. The indicated temporary BMP is required on slope lengths greater than 15 meters where feasible (see Note 3).
7. For disturbed soil areas that are within 5 miles of the Salton Sea or the Colorado River and also within 150 meters of a permanent or intermittent stream as identified on an USGS quad map, the temporary BMPs indicated will be required.
8. Linear barrier systems are equivalent to what are sometimes referred to as perimeter systems. The intent is to provide a barrier to the transport of sediment at the downslope edge of soil disturbed areas.

The practices described herein are typical of those that will be implemented on a project-by-project basis. However, it is important to note that there will be instances where project and site conditions require deviation from the BMPs and the descriptions described in these Guidelines. For instance, the proposed implementation of desilting basins is a new commitment that has not been incorporated into existing designs. In addition, the nature of linear projects and constrained rights-of-way inherent to Caltrans work may prohibit the use of desilting basins at some locations on certain projects and on some projects altogether. Implementation of desilting basins will be considered on a project-by-project basis. Caltrans is committed to refining the desilting basin implementation criteria during the term of this Permit while implementing the desilting basins on projects as practicable.

4.3.4.3 Stockpile Management

Soil stabilization and sediment control requirements as they apply to stockpiles of various materials are presented in Section 4.5.14 of the Guidelines.

4.4 GUIDANCE FOR IMPLEMENTATION OF OTHER BMPs

4.4.1 Mobile Operations

Mobile operations common to the construction of a project include asphalt recycling, concrete mixing, crushing and the storage of materials. BMPs shall be implemented, as appropriate, to control the individual situations these mobile operations can create. Section 4.5 of the Guidelines provides guidance on implementation of BMPs related to the specific activity being conducted.

4.4.2 Wind Erosion Controls

Wind erosion controls shall be considered for all disturbed soils on the project site that are subject to wind erosion and when significant wind and dry conditions are anticipated during construction of the project. See Section 4.5.8 of the Guidelines for BMP details.

4.4.3 Tracking Controls

Tracking controls shall be implemented as needed to reduce the tracking of sediment and debris from the construction site. At a minimum entrances and exits shall be inspected daily and controls implemented as needed. See Section 4.5.9 of the Guidelines for BMP details.

4.4.4 Non-Storm Water and Waste Management and Materials Pollution Controls

The objective of the non-storm water and waste management and materials pollution controls is to reduce the discharge of materials other than storm water to the storm water drainage system or to receiving waters. These controls shall be implemented for all applicable activities, material usage, and site conditions. Section 4.5 of the Guidelines provides guidance on implementation of BMPs related to the specific activity being conducted.

4.5 BEST MANAGEMENT PRACTICES

Temporary construction BMPs are approved for implementation on Caltrans construction projects as appropriate.

4.5.1 Temporary Sediment Control

Temporary sediment control practices include those practices that intercept and slow or detain the flow of storm water to allow sediment to settle and be trapped. These practices can consist of installing temporary linear sediment barriers (such as silt fences, sandbag barriers, and straw bale barriers); providing fiber rolls, gravel bag berms, or check dams to break up slope length or flow; or constructing a temporary desilting basin, sediment trap, or sediment basin. Linear sediment barriers are typically placed below the toe of exposed and erodible slopes, downslope of exposed soil areas, around temporary soil stockpiles and at other appropriate locations along the site perimeter. Temporary sediment control practices and appropriate applications are described below.

Silt Fence

Description:

> A silt fence is a temporary linear sediment barrier of permeable fabric designed to intercept and slow the flow of sediment-laden sheet flow runoff. Silt fences allow sediment to settle from runoff before water leaves a construction site.

Appropriate Applications:

- Silt fences are typically placed below the toe of exposed and erodible slopes, downslope of exposed soil areas or around temporary soil stockpiles.
- Silt fences shall be constructed with a set-back of at least 1m from the toe of a slope. Where a silt fence is determined to be not practicable due to specific site conditions, the silt fence may be constructed at the toe of the slope, but shall be constructed as far from the toe of the slope as practicable.

Implementation:

- Silt fences shall be implemented in conformance with the criteria presented in Section 4.3.4.
- A conceptual silt fence is shown in Figure 4-2.

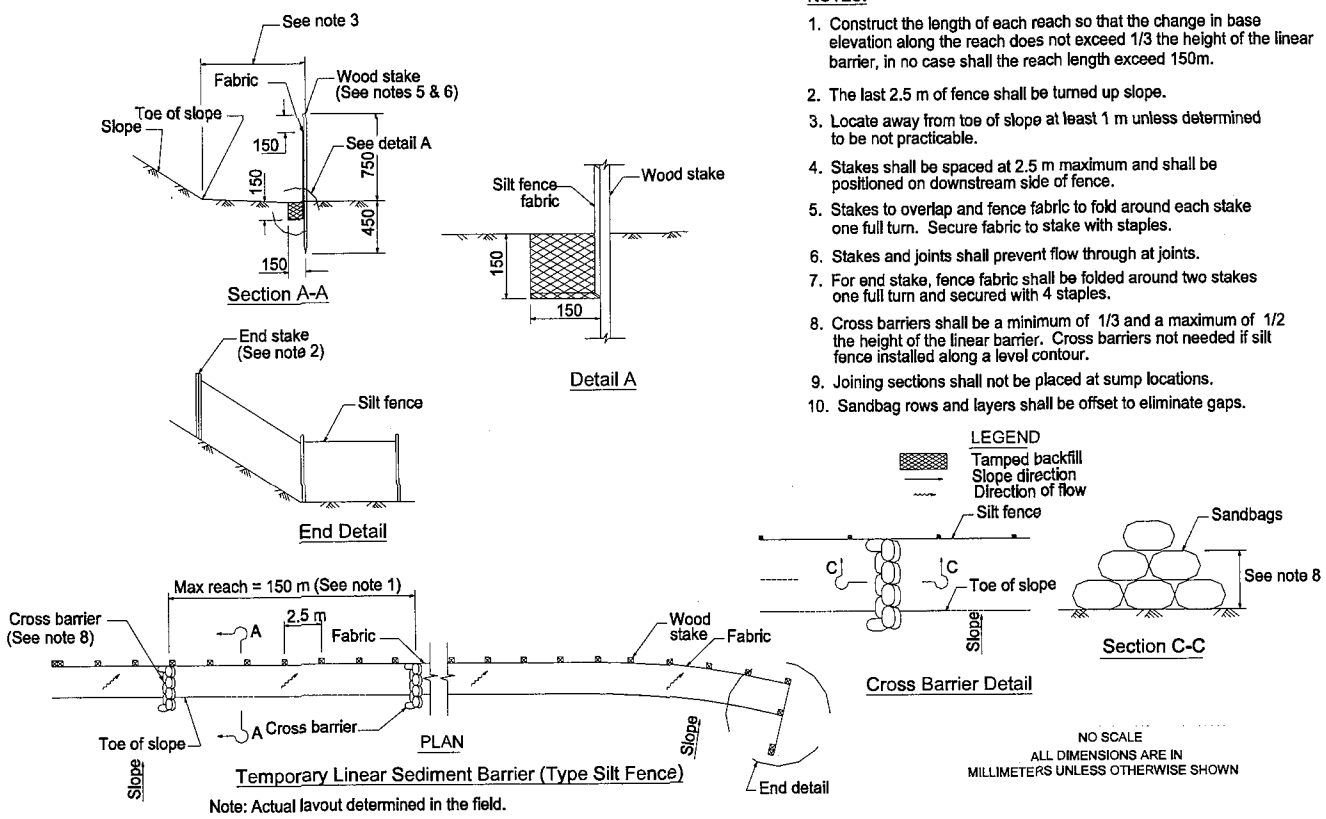

NOTES:

1. Construct the length of each reach so that the change in base elevation along the reach does not exceed 1/3 the height of the linear barrier, in no case shall the reach length exceed 150m.
2. The last 2.5 m of fence shall be turned up slope.
3. Locate away from toe of slope at least 1 m unless determined to be not practicable.
4. Stakes shall be spaced at 2.5 m maximum and shall be positioned on downstream side of fence.
5. Stakes to overlap and fence fabric to fold around each stake one full turn. Secure fabric to stake with staples.
6. Stakes and joints shall prevent flow through at joints.
7. For end stake, fence fabric shall be folded around two stakes one full turn and secured with 4 staples.
8. Cross barriers shall be a minimum of 1/3 and a maximum of 1/2 the height of the linear barrier. Cross barriers not needed if silt fence installed along a level contour.
9. Joining sections shall not be placed at sump locations.
10. Sandbag rows and layers shall be offset to eliminate gaps.

Figure 4-2
Conceptual Temporary Linear Sediment Barrier (Silt Fence)

Maintenance:

- Repair undercut silt fences. Repair or replace split, torn, slumping or weathered fabric.
- Remove sediment when accumulation reaches one-third of the fence height. Sediments removed shall be disposed of properly.
- Remove a silt fence when it is no longer needed. Fill and compact post holes and anchorage trench, remove sediment accumulation and grade fence alignment to blend with adjacent ground.

Sandbag Barrier

Description:

A sandbag barrier is a temporary linear sediment barrier consisting of stacked sandbags designed to intercept and slow the flow of sediment-laden sheet flow runoff. Sandbag barriers allow sediment to settle from runoff before water leaves a construction site.

Appropriate Applications:

- Sandbag barriers are typically placed below the toe of exposed and erodible slopes, downslope of exposed soil areas or around temporary soil stockpiles.
- Sandbag barriers shall be constructed with a set-back of at least 1m from the toe of a slope. Where it is determined to be not practicable due to specific site conditions, the sandbag barrier may be constructed at the toe of the slope, but shall be constructed as far from the toe of the slope as practicable.
- This BMP may be implemented on a project-by-project basis in addition to other BMPs when determined necessary and feasible by the PE.

Implementation:

- Sandbag materials:
  - Bag material shall be either polypropylene, polyethylene, or polyamide woven fabric.
  - Fill material shall be noncohesive coarse sand/or gravel free from deleterious material.
- Sandbag barriers shall be implemented in conformance with the criteria presented in Section 4.3.4.
- A conceptual sandbag barrier is shown in Figure 4-3.

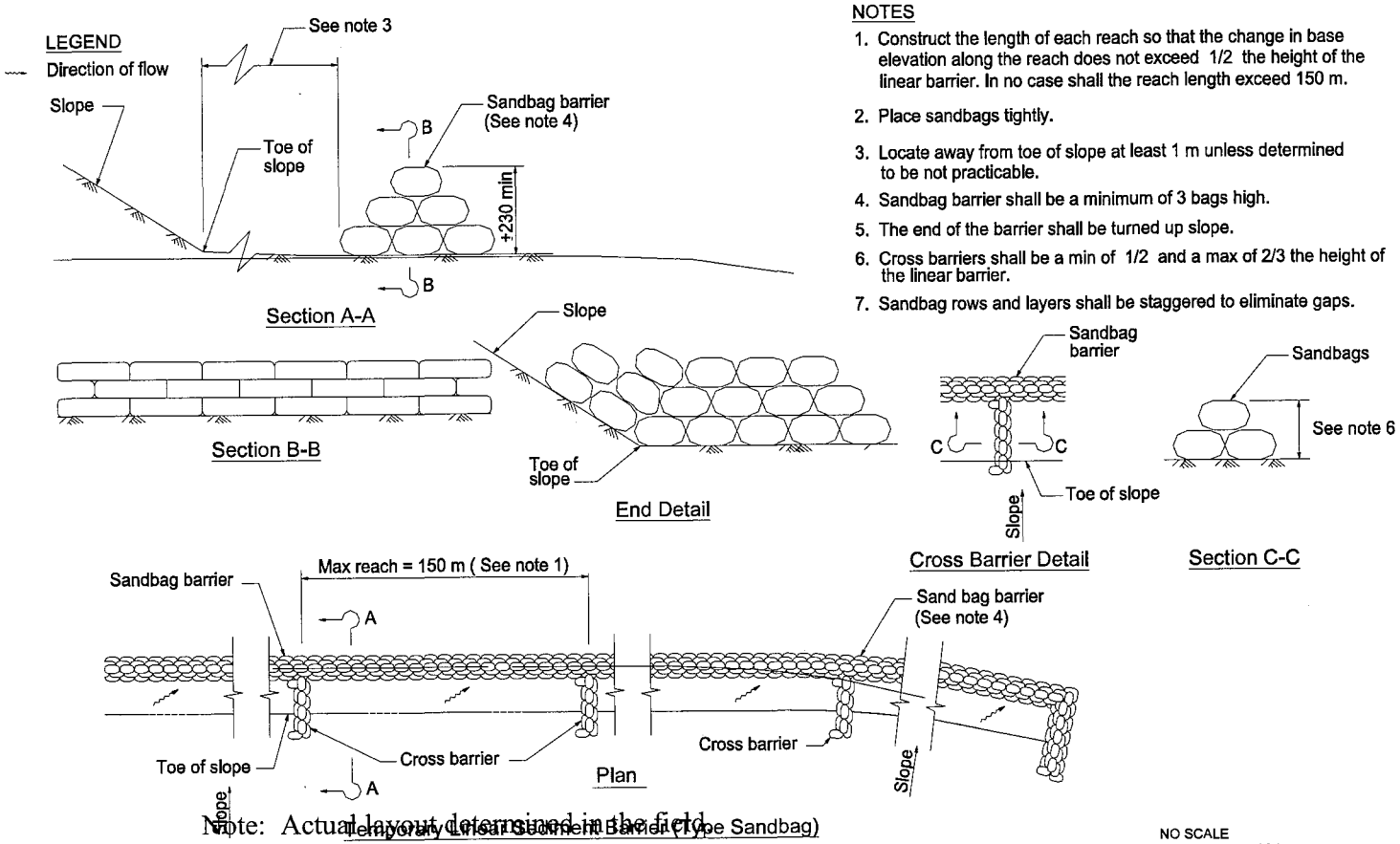

NOTES

1. Construct the length of each reach so that the change in base elevation along the reach does not exceed 1/2 the height of the linear barrier. In no case shall the reach length exceed 150 m.
2. Place sandbags tightly.
3. Locate away from toe of slope at least 1 m unless determined to be not practicable.
4. Sandbag barrier shall be a minimum of 3 bags high.
5. The end of the barrier shall be turned up slope.
6. Cross barriers shall be a min of 1/2 and a max of 2/3 the height of the linear barrier.
7. Sandbag rows and layers shall be staggered to eliminate gaps.

Note: Actual layout determined in the field.

Note: Actual layout determined in the field.

Note: Actual layout determined in the field.

NO SCALE
ALL DIMENSIONS ARE IN MILLIMETERS UNLESS OTHERWISE SHOWN

Figure 4-3
Conceptual Temporary Linear Sediment Barrier (Sandbag)

Maintenance:

- Reshape or replace sandbags as needed.
- Repair washouts or other damages as needed.
- Remove sediment when accumulation reaches one-third of the barrier height. Sediments removed shall be disposed of properly.
- Remove sandbags when no longer needed. Remove sediment accumulation, clean, regrade and stabilize the area.

Straw Bale Barrier

Description:

A straw bale barrier is a temporary linear sediment barrier consisting of straw bales designed to intercept and slow the flow of sediment-laden sheet flow runoff. Straw bale barriers allow sediment to settle from runoff before water leaves a construction site.

Appropriate Applications:

- Straw bale barriers are typically placed below the toe of exposed and erodible slopes, downslope of exposed soil areas or around temporary soil stockpiles.
- Straw bale barriers shall be constructed with a set-back of at least 1m from the toe of a slope. Where it is determined to be not practicable due to specific site conditions, the straw bale barrier may be constructed at the toe of the slope, but shall be constructed as far from the toe of the slope as practicable.
- This BMP may be implemented on a project-by-project basis in addition to other BMPs when determined necessary and feasible by the PE.

Implementation:

- Straw bale barriers shall be implemented in conformance with the criteria presented in Section 4.3.4.
- A conceptual straw bale barrier is shown in Figure 4-4.

Maintenance:

- Repair or replace damaged straw bales as needed.
- Repair washouts or other damage as needed.

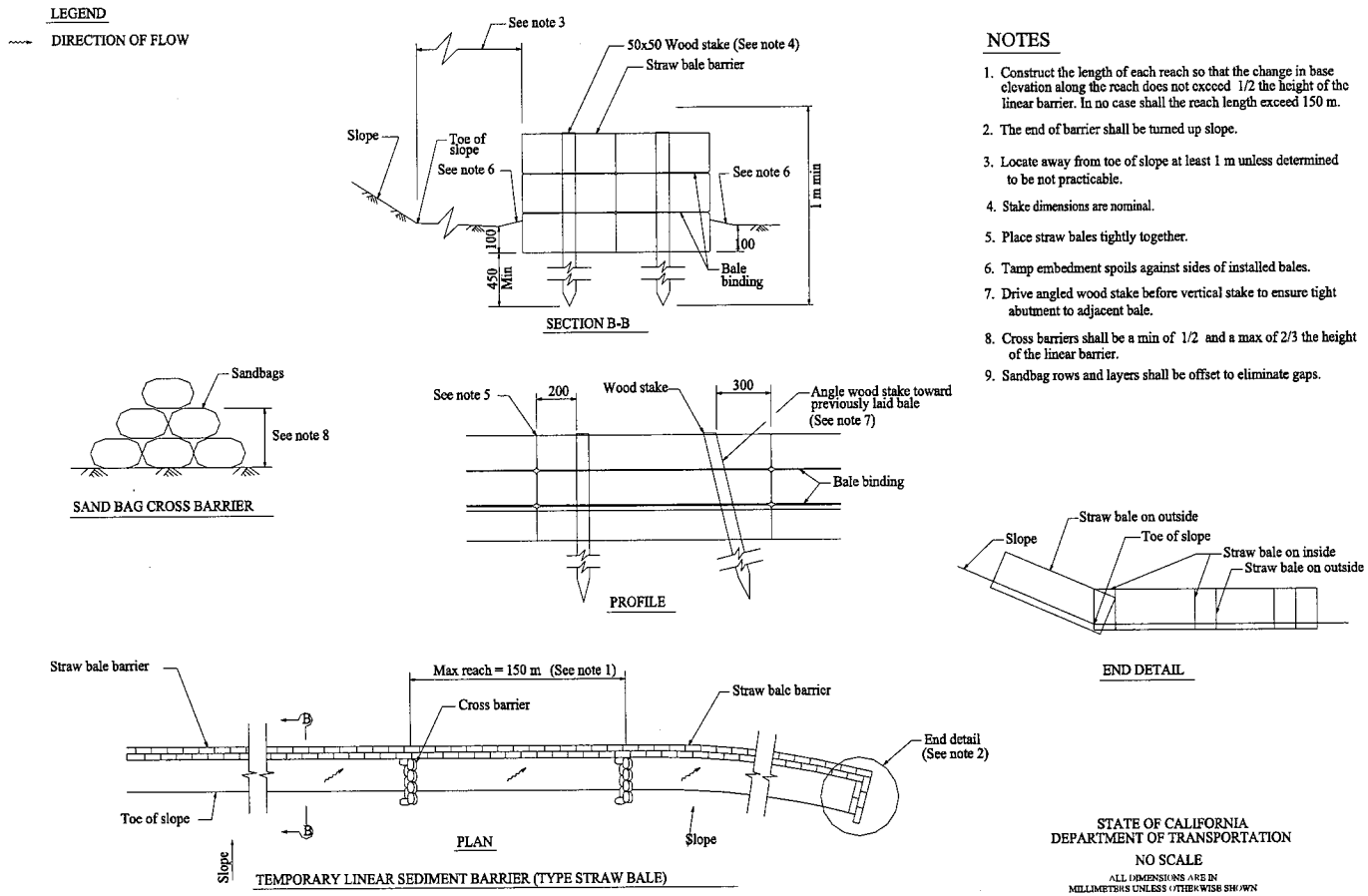

NOTES

1. Construct the length of each reach so that the change in base elevation along the reach does not exceed 1/2 the height of the linear barrier. In no case shall the reach length exceed 150 m.
2. The end of barrier shall be turned up slope.
3. Locate away from toe of slope at least 1 m unless determined to be not practicable.
4. Stake dimensions are nominal.
5. Place straw bales tightly together.
6. Tamp embedment spoils against sides of installed bales.
7. Drive angled wood stake before vertical stake to ensure tight abutment to adjacent bale.
8. Cross barriers shall be a min of 1/2 and a max of 2/3 the height of the linear barrier.
9. Sandbag rows and layers shall be offset to eliminate gaps.

Figure 4-4
Conceptual Temporary Linear Sediment Barrier (Straw Bale)

- Remove sediment when accumulation reaches one-third of the barrier height. Sediments removed shall be disposed properly.
- Remove straw bales when no longer needed. Regrade and stabilize the area.

Fiber Rolls

Description:

A fiber roll consists of straw, flax, or other similar materials that are rolled or bound into a tight tubular roll and placed on the face of slopes at regular intervals to intercept runoff, reduce its flow velocity, release the runoff as sheet flow and provide some removal of sediment from the runoff.

Appropriate Applications:

- Fiber rolls shall be implemented in conformance with the criteria presented in Section 4.3.4.
- May be used along the face and at grade breaks of exposed and erodible slopes to shorten slope length and spread runoff as sheet flow.
- This BMP may be implemented on a project-by-project basis with other BMPs when determined necessary and feasible by the RE.
- Although fiber rolls provide some sediment removal, this BMP is not to be used in place of a linear sediment barrier (i.e., a silt fence, sandbag barrier, or straw bale barrier).

Implementation:

- Fiber roll materials are either:
  - Prefabricated rolls; or
  - Rolled tubes of erosion control blanket.
- Assembly of field-rolled fiber roll
  - Roll length of erosion control blanket into a tube.
  - Bind roll at each end and along length of roll with jute-type twine.
- Installation
  - Install fiber rolls on level contours.
  - Stake fiber rolls into a trench.
- A conceptual fiber roll installation is shown in Figure 4-5.

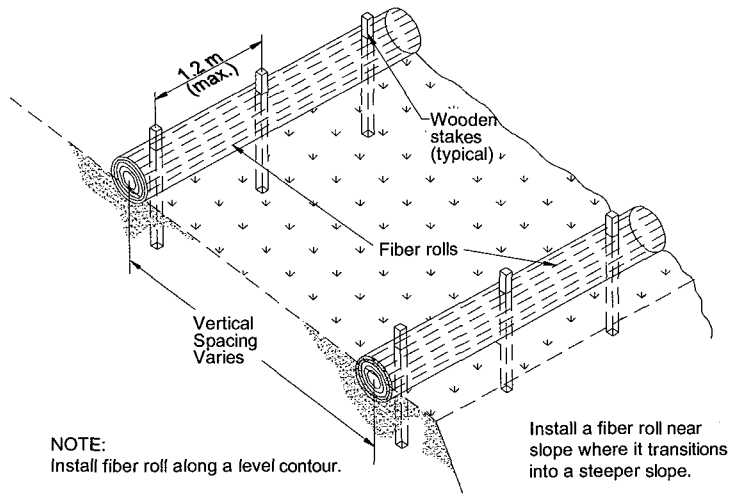

Figure 4-5
Conceptual Fiber Roll Installation

Maintenance:

Repair or replace split, torn, unraveling, or slumping fiber rolls.

Gravel Bag Berm

Description:

A gravel bag berm consists of a single row of gravel bags that are installed end to end to form a barrier across a slope to intercept runoff, reduce its flow velocity, release the runoff as sheet flow and provide some removal of sediment from the runoff.

Appropriate Applications:

- Gravel bag berms shall be implemented in conformance with the criteria presented in Section 4.3.4.
- May be used along the face and at grade breaks of exposed and erodible slopes to shorten slope length and spread runoff as sheet flow.
- This BMP may be implemented on a project-by-project basis with other BMPs when determined necessary and feasible by the RE.
- Although gravel bag berms provide some sediment removal, this BMP is not to be used in place of a linear sediment barrier (i.e., a silt fence, sandbag barrier, or straw bale barrier).

Implementation:

- Gravel bag berm materials:
  - Bag material shall be either polypropylene, polyethyline, or polyamide woven fabric or burlap.
  - Fill material shall be one-half to one-inch of clean aggregate.
- Installation
  - Install gravel bag berm on a level contour.
  - Tightly abut bags.

Maintenance:

- Reshape or replace gravel bags as needed.
- Repair washouts or other damages as needed.
- Remove sediment when accumulation reaches one-third of the berm height. Sediments removed shall be disposed of properly.
- Remove gravel bags when no longer needed. Remove sediment accumulation. Clean, regrade and stabilize the area.

Check Dam

Description:

A check dam is a small device constructed of rock or sandbags placed across a natural or man-made channel or drainage ditch. Erosion of the drainage ditch is reduced by restricting the velocity of flow in the ditch.

Appropriate Applications:

Check dams may be installed in small open channels that drain 4 hectares (ha) or less, in steep channels where runoff velocities exceed 1.5 meters per second (m/s), during the establishment of grass linings in drainage ditches or channels, or in temporary ditches where the short length of service does not warrant the establishment of erosion-resistant lining.

- This BMP may be implemented on a project-by-project basis with other BMPs when determined necessary and feasible by the RE.
- Not to be used in live streams.
- Not appropriate in channels that drain areas greater than 4 ha (10 acres).

- Not to be placed in channels that are already grass lined.
- Not to be constructed from straw bales or a silt fence.

Implementation:

- Check dams shall be placed at a distance and height to allow small pools to form behind them.
- For multiple check dam installation, backwater from downstream check dam shall reach the toe of the upstream dam.
- High flows (typically, a two-year storm or larger) shall safely flow over the check dam without an increase in upstream flooding or damage to the check dam.
- Where grass is used to line ditches, check dams shall be removed when the grass has matured sufficiently to protect the ditch or swale.
- A sump shall be provided immediately upstream of the check dam for the purpose of capturing excessive sediment.
- A conceptual rock check dam is shown in Figure 4-6.

Maintenance:

- Remove sediment when depth reaches one-third of the check dam height.

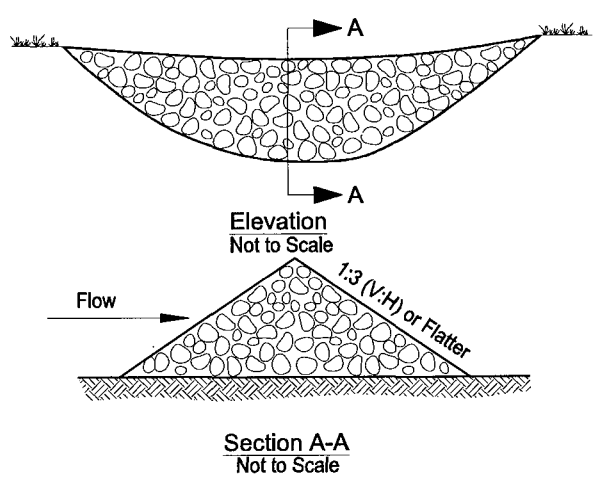

Figure 4-6

Conceptual Rock Check Dam

Desilting Basin

Description:

A desilting basin is a temporary basin formed by excavation and/or constructing an embankment so that sediment-laden runoff is temporarily detained under quiescent conditions, allowing sediment to settle out before the runoff is discharged.

Appropriate Applications:

Desilting basins shall be considered for use on construction projects with disturbed areas where sediment-laden water may enter drainage systems or watercourses.

Implementation:

- Temporary desilting basins shall be implemented in conformance with the criteria presented in Section 4.3.4.
- Desilting basins will be designed to have a capacity equivalent to 100 cubic meters of storage (as measured from the bottom of the basin to the principal outlet) per hectare of contributory area. This design is less than required to capture the 0.01 mm particle but larger than that required to capture particles 0.02 mm or larger. The length of the basin should be more than twice the width of the basin. The length shall be determined by measuring the distance between the inlet and the outlet. The depth must not be less than one meter nor greater than 1.5 meters.
- Limit the contributing area to the desilting basin to only the runoff from the disturbed soil areas. Use temporary concentrated flow conveyance controls to divert runoff from undisturbed areas away from the desilting basin.
- Avoid dewatering of groundwater to the desilting basin during the rainy season. Insignificant quantities of accumulated precipitation may be dewatered to the desilting basin unless precipitation is forecasted within 24 hours.
- Basins will be designed to drain within 72 hours following storm events.
- Temporary desilting basins must be fenced if safety is a concern.
- A conceptual temporary desilting basin is shown in Figure 4-7.

Maintenance

- Check basin banks for seepage and structural soundness.
- Check inlet and outlet structures and spillway for any damage or obstructions. Repair damage and remove obstructions as needed.

- Check inlet and outlet area for erosion and stabilize if required.
- Remove sediments when storage zone is one-third full.

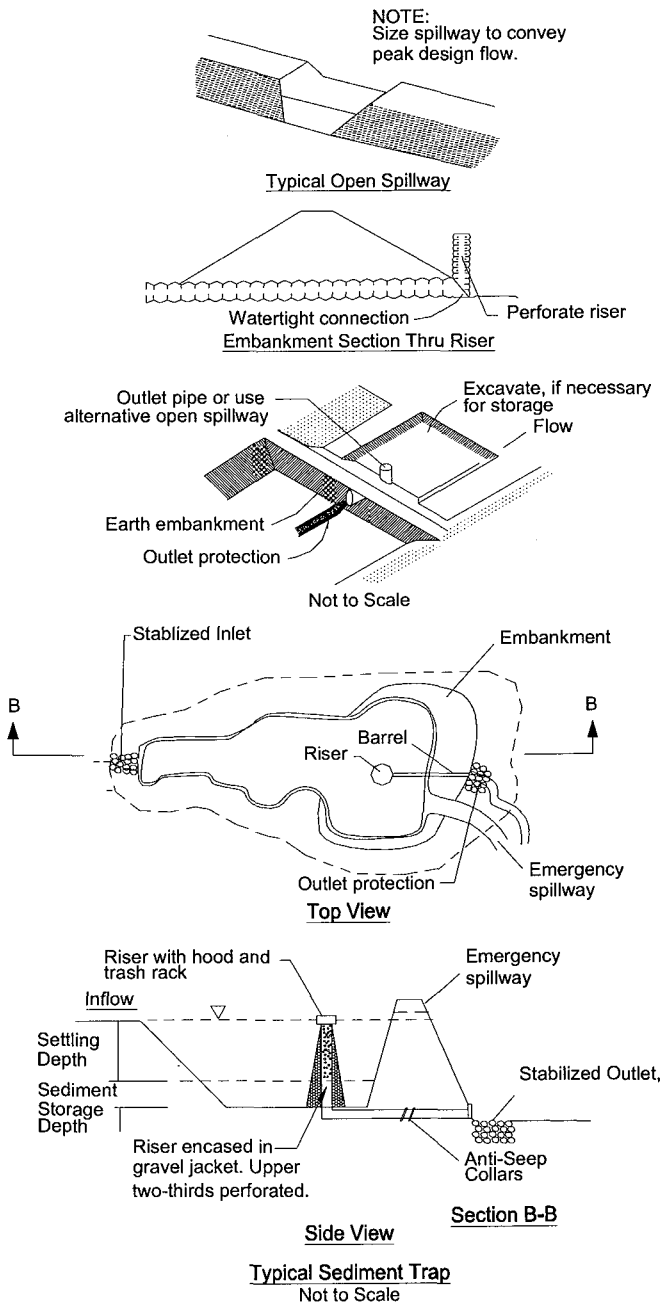

Note: Actual layout determined in the field.

Figure 4-7
Conceptual Temporary Desilting Basins

Sediment Trap

Description:

A sediment trap is a temporary basin with a controlled release structure. Sediment traps are formed by excavating or constructing an earthen embankment across a waterway or low drainage area.

Appropriate Applications:

Sediment traps may be used on construction projects where the contributing drainage area is less than 2 ha (5 acres). Traps would be placed where sediment-laden storm water may enter a storm drain or watercourse.

- This BMP may be implemented on a project-by-project basis with other BMPs when determined necessary and feasible by the RE.
- Requires large surface areas to permit settling of sediment.
- Not appropriate for drainage areas greater than 2 ha (5 ac).
- Not to be located in live streams.

Implementation:

- Traps shall be situated according to the following criteria: (1) by excavating a suitable area or where a low embankment can be constructed across a swale, (2) where failure would not cause loss of life or property damage, and (3) to provide access for maintenance, including sediment removal and sediment stockpiling in a protected area.
- Areas under embankments, structural works, and sediment traps shall be cleared and stripped of vegetation.
- Trap inlets shall be located to maximize the travel distance to the trap outlet. Use rock or vegetation to protect the trap outlets against erosion.
- To dewater the trap, the outlet shall be constructed in one of the following two ways: (1) use corrugated metal or reinforced concrete riser pipe with dewatering holes encased in gravel; or (2) construct a crushed stone outlet section of the embankment at the low point of the trap.

Maintenance:

- Check trap banks for seepage and structural soundness.
- Check outlet structure and spillway for any damage or obstructions. Repair damage and remove obstructions as needed.
- Check outlet area for erosion and stabilize if required.

- Remove accumulated sediment when its volume reaches one-third the volume of the trap.
- Properly dispose of sediment and debris removed from the trap.

Sediment Basin

Description:

A sediment basin is a temporary basin with a controlled release structure. Sediment basins are formed by excavating or constructing an earthen embankment across a waterway or low drainage area.

Appropriate Applications:

- Sediment basins shall be designed in accordance with Section A of the State of California NPDES General Permit for Storm Water Discharges Associated with Construction Activities.
- This BMP may be implemented on a project-by-project basis with other BMPs when determined necessary and feasible by the RE.
- Requires large surface areas to permit settling of sediment.
- Not to be located in live streams.

Implementation:

- Areas under sediment basin embankments shall be cleared and stripped of vegetation.
- Basin inlets shall be located to maximize the travel distance to the basin outlet. Use rock or vegetation to protect the basin outlets against erosion.
- To dewater the basin, the outlet shall be constructed in one of the following two ways: (1) use corrugated metal or reinforced concrete riser pipe with dewatering holes encased in gravel; or (2) construct a crushed stone outlet section of the embankment at the low point of the basin.

Maintenance:

- Check basin banks for seepage and structural soundness.
- Check outlet structure and spillway for any damage or obstructions. Repair damage and remove obstructions as needed.
- Check outlet area for erosion and stabilize if required.
- Remove accumulated sediment when its volume reaches one-third the volume of the trap. Properly dispose of sediment and debris removed from the trap.

4.5.2 Temporary Soil Stabilization

Temporary soil stabilization consists of preparing the soil surface and applying one of the following BMPs, or combination thereof, to disturbed soil areas:

- Hydraulic mulch;
- Hydroseeding;
- Soil binder;
- Straw mulch; or
- Geotextiles, mats/plastic covers and erosion control blankets.

Temporary soil stabilization is appropriate for application to disturbed soil areas of construction projects. Temporary soil stabilization shall be implemented in conformance with the criteria presented in Section 4.3.4.

Hydraulic Mulch

Description:

Hydraulic mulch consists of applying a mixture of shredded wood fiber and tackifier with hydro-mulching equipment.

Appropriate Applications:

Hydraulic mulch is typically applied to disturbed areas requiring temporary protection until permanent vegetation is established or disturbed areas that must be re-disturbed following an extended period of inactivity. Avoid use in areas where the mulch would be incompatible with future earthwork activities and would have to be removed.

Implementation:

- Typical application rates are 500 pounds per acre.
- Prior to application, roughen embankment and fill areas by rolling with a crimping or punching type roller or by track walking. Track walking should only be used where rolling is impractical.
- Avoid mulch over-spray onto the traveled way, sidewalks, lined drainage channels, or existing vegetation.

Maintenance:

Maintain an unbroken, temporary mulched ground cover throughout the period of construction when the soils are not being reworked. Repair any damaged ground cover and re-mulch exposed areas of soil.

Hydroseeding

Description:

Hydroseeding typically consists of applying a mixture of wood fiber, seed, fertilizer and stabilizing emulsion with hydro-mulch equipment.

Appropriate Applications:

Hydroseeding is typically applied on disturbed areas requiring temporary protection until permanent vegetation is established or disturbed areas that must be re-disturbed following an extended period of inactivity.

Implementation:

- Avoid use in areas where the BMP would be incompatible with future earthwork activities and would have to be removed.
- Prior to application, roughen embankment and fill areas.
- Hydroseeding can be accomplished using a multiple-step or one-step process. The multiple-step process ensures maximum direct contact of the seeds to soil. When the one-step process is used to apply the mixture of wood fiber, seed, etc., the seed rate shall be increased to compensate for all seeds not having direct contact with the soil.
- Avoid mulch over-spray onto the traveled way, sidewalks, lined drainage channels, or existing vegetation.

Maintenance:

All seeded areas shall be checked for failures and re-seeded, fertilized, and mulched within the planting season, using not less than half the original application rates. Any temporary revegetation efforts that do not provide adequate cover within 30 days of planting must be revegetated within 40 days of the initial installation.

Soil Binders

Description:

Soil binders consist of applying and maintaining polymeric or lignin sulfonate soil stabilizers or emulsions.

Appropriate Applications:

Soil binders are typically applied to disturbed areas requiring short-term temporary protection. Because soil binders can often be incorporated into the work, they may be a good choice for areas where grading activities will soon resume.

There are a wide variety of soil binders available for use, with a wide variety of application limitations. The manufacturers specifications shall be reviewed and compared to the site-specific conditions. In selecting a soil binder, the following criteria should be considered:

- Availability of product;
- Ease of cleanup;
- Installed cost;
- Degradability (how the product degrades and what its by-products are);
- Length of drying time;
- Erosion control effectiveness;
- Longevity;
- Mode of application and availability of application equipment;
- Residual impact on future construction activities; and
- Water quality impact.

Implementation:

- Prior to application, roughen embankment and fill areas. Track walking should only be used where rolling is impractical. Pre-wet the soil if called for by the manufacturer's specifications.
- Apply soil binders per manufacturer's specifications.
- Soil binders shall be nontoxic to plant and animal life and shall not stain paved or painted surfaces.
- Soil binders shall not be applied to frozen soil, areas with standing water, or when the air temperature is below 4° C during the curing period.
- Consider the drying time for the selected soil binder and apply with sufficient time before anticipated rainfall. Soil binders shall not be applied during or immediately before rainfall.
- Avoid over-spray onto the traveled way, sidewalks, lined drainage channels, or and/or vegetation.

Maintenance:

Check protected areas to ensure proper coverage and re-apply soil binder as needed.

Straw Mulch

Description:

Straw mulch consists of the placing of a uniform layer of straw and incorporating it into the soil with a studded roller or anchoring it with a stabilizing emulsion.

Appropriate Applications:

Straw mulch is typically used for soil stabilization as a temporary surface cover on disturbed areas until soils can be prepared for revegetation and permanent vegetation is established. Straw mulch is also typically used in combination with temporary and/or permanent seeding strategies to enhance plant establishment.

Implementation:

- Typical application rates are a minimum of 1,500 to 2,000 pounds per acre.
- Avoid use in areas where the straw mulch would be incompatible with future earthwork activities and would have to be removed.
- Straw mulch shall be derived from wheat, rice or barley.
- If stabilizing emulsion will be used to anchor the straw mulch in lieu of incorporation, roughen embankment and fill areas before placing the straw mulch by rolling with a crimping or punching-type roller or by track walking. Track walking should only be used where rolling is impractical.
- Straw mulch with emulsion shall not be applied during or immediately before rainfall.
- Avoid placing straw mulch onto the traveled way, sidewalks, lined drainage channels, or existing vegetation.

Maintenance:

Maintain an unbroken, temporary mulched ground cover while DSAs are nonactive. Repair any damaged ground cover and re-mulch exposed areas.

Geotextiles, Mats/Plastic Covers and Erosion Control Blankets

Description:

This BMP involves the placement of geotextiles, mats, plastic covers or erosion control blankets to stabilize disturbed soil areas.

Appropriate Applications:

These measures are typically used where disturbed soils may be particularly difficult to stabilize, including steep slopes (greater than 1:3 [vertical:horizontal]), slopes where erosion hazard is high, slopes where mulch must be anchored, disturbed areas where plants are slow to develop, channels with flows exceeding approximately 1.0 m/s and in channels to be vegetated.

Implementation:

Illustrations of conceptual geotextiles, mats/plastic covers, and erosion control blankets are shown in Figure 4-8.

Maintenance:

- Check for erosion and undermining. Any failures shall be repaired immediately.
- If washout or breakages occur, re-install the material after repairing the damage to the slope or channel.

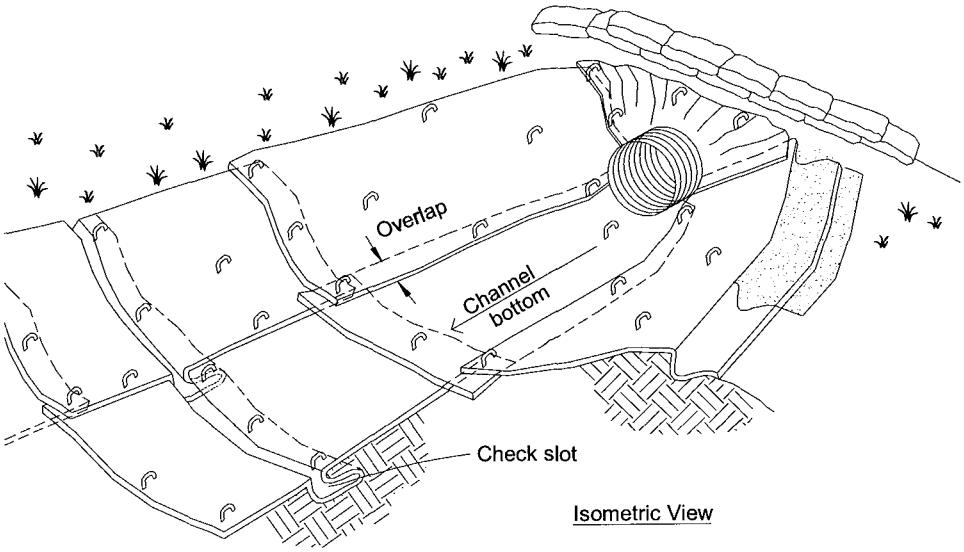

Isometric View

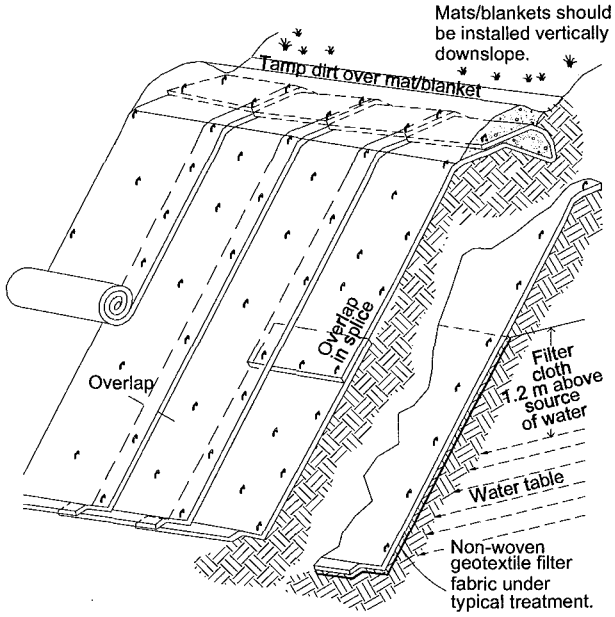

Wet Slope Lining
Not to Scale

Note: Actual layout determined in the field.

Figure 4-8
Conceptual Geotextiles, Mats/Plastic Covers and Erosion Control Blankets

4.5.3 Scheduling

Scheduling

Description:

This BMP involves a schedule for every project that considers sequencing of construction activities with the installation of erosion and sediment control measures. The purpose is to reduce the amount and duration of soil exposed to erosion by wind, rain, runoff and vehicle tracking and to perform the construction activities and control practices in accordance with the planned schedule.

Appropriate Applications:

Construction sequencing shall typically be scheduled to minimize land disturbance for all projects during the winter season.

Implementation:

- Consider scheduling work items such as clearing and grubbing, grading and excavation to minimize the active construction area during the rainy season.
- Minimize soil-disturbing activities during the rainy season.
- Consider scheduling when establishing permanent vegetation (appropriate planting time for specified vegetation).

Maintenance:

- Verify that work is progressing in accordance with the schedule. If progress deviates, take corrective actions.
- When changes are warranted, amend the sequence scheduling in advance to maintain sediment control.

4.5.4 Preservation of Existing Vegetation

Description:

Preservation of existing vegetation is the identification and protection of desirable vegetation that provides erosion and sediment control benefits.

Appropriate Applications:

- Preserve existing vegetation at areas on a site where no construction activity is planned or where it will occur at a later date.
- As described in Section 4.3.2, on a year-round basis temporary fencing shall be provided prior to the commencement of clearing and grubbing operations or other

soil-disturbing activities in areas where no construction activity is planned or will occur at a later date.

Implementation:

The following general steps shall be taken to preserve existing vegetation:

- Mark areas to be preserved with orange polypropylene temporary fencing.
- Minimize disturbed areas by locating temporary roadways to avoid stands of trees and shrubs and to follow existing contours to reduce cutting and filling.
- Construction materials and equipment storage and parking areas shall be located where they will not cause root compaction.
- Keep equipment away from trees to prevent trunk damage and root damage.
- Consider the impact of grade changes to existing vegetation and the root zone.

Maintenance:

Ensure that the limits of disturbance are clearly marked. Irrigation or maintenance of existing vegetation shall conform to the requirements in the landscaping plans.

4.5.5 Temporary Concentrated Flow Conveyance Controls

Temporary concentrated flow conveyance controls consist of a system of measures that are used alone or in combination to intercept, divert, convey and discharge concentrated flows with a minimum of soil erosion, both on-site and downstream (off-site). Temporary concentrated flow conveyance controls may be required to direct run-on around or through a project in a non-erodible fashion.

Earth Dikes/Drainage Swales and Lined Ditches

Description:

These are structures that intercept, divert and convey concentrated surface runoff, generally sheet flow, to prevent erosion.

Appropriate Applications:

These structures may be used to convey surface runoff down sloping land; to intercept and divert runoff to avoid sheet flow over sloped surfaces; and to direct runoff towards a stabilized watercourse, drainage pipe or channel. Also, these structures may be used below steep grades where runoff begins to concentrate and along roadways and facility improvements subject to flood drainage.

- This BMP may be implemented on a project-by-project basis with other BMPs when determined necessary and feasible by the RE.
- These structures are not suitable as sediment-trapping devices.

Implementation:

- Care must be applied to correctly size and locate earth dikes, drainage swales and lined ditches. Excessively steep, unlined dikes and swales are subject to erosion and gully formation.
- Select flow velocity based on careful evaluation of the risks due to erosion of the measure, soil types, overtopping, flow backups, washout and drainage flow patterns for each project site.
- Compact any fills to prevent unequal settlement.
- When possible, install and utilize permanent dikes, swales and ditches early in the construction process.
- Provide stabilized outlets.
- A conceptual diversion ditch/drainage swale and a conceptual diversion berm/earth dike are shown in Figure 4-9.

Maintenance:

- Temporary conveyances should be completely removed as soon as the surrounding drainage area has been stabilized or at the completion of construction.
- Check the channel lining, embankments, and bed for erosion and accumulating debris and sediment buildup. Remove debris and repair linings and embankments as required.

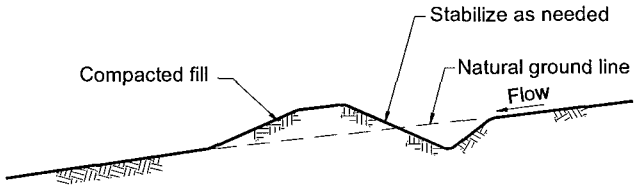

Conceptual Diversion Ditch/Drainage Swale
Not to Scale

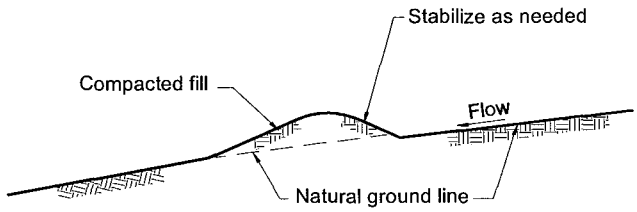

Conceptual Diversion Dike/Berm
Not to Scale

Figure 4-9
Conceptual Diversion Ditch/Drainage Swale and Diversion Berm/Earth Dike

Outlet Protection/Velocity Dissipation Devices

Description:

These devices are placed at pipe outlets to prevent scour and reduce the velocity and/or energy of exiting storm water flows.

Appropriate Applications:

- These devices may be used at the outlets of pipes, drains, culverts, slope drains, diversion ditches, swales, conduits or channels. Also, these devices may be used at outlets located at the bottom of mild-to-steep slopes; outlets subject to short, intense flows of water; discharge outlets that carry continuous flows of water; and points where lined conveyances discharge to unlined conveyances.
- This BMP may be implemented on a project-by-project basis with other BMPs when determined necessary and feasible by the RE.

Implementation:

- Install riprap, grouted riprap, or concrete apron at selected outlets.
- Apron length is related to outlet flow rate and tailwater level.
- For proper operation of apron:
  - Align apron with receiving stream and keep straight throughout its length. If a curve is needed to fit site conditions, place it in upper section of apron.
  - If size of apron riprap is large, protect underlying filter fabric with a gravel blanket.
- Outlets on slopes steeper than 10 percent shall have additional protection.
- A conceptual outlet protection/velocity dissipation device is shown in Figure 4-10.

Maintenance:

- Check apron for displacement of the riprap and/or damage to the underlying fabric. Repair fabric and replace the riprap that has washed away.
- Check for scour beneath the riprap and around the outlet. Repair damage to slopes or underlying filter fabric immediately.
- Temporary devices should be completely removed as soon as the surrounding drainage area has been stabilized or at the completion of construction.

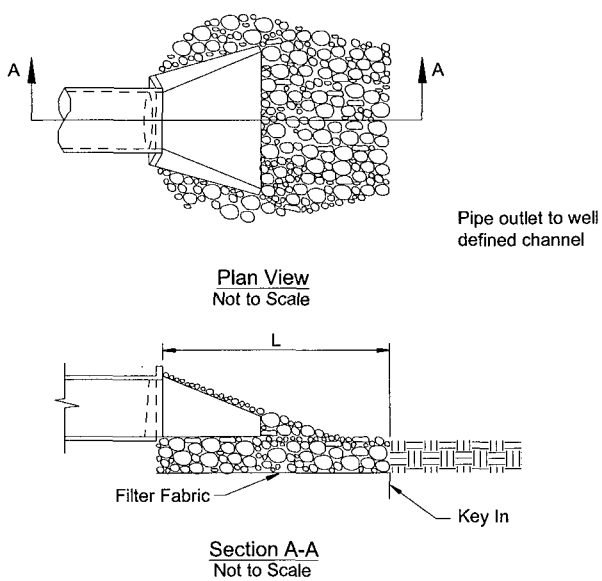

Figure 4-10
Conceptual Outlet Protection/ Velocity Dissipation Device

Slope Drains

Description:

A slope drain is a pipe used to intercept and direct surface runoff or groundwater into a stabilized watercourse, trapping device or stabilized area. Slope drains are typically used with lined ditches to intercept and direct surface flow away from slope areas to protect cut or fill slopes.

Appropriate Applications:

Slope drains may be used at construction sites where slopes may be eroded by surface runoff.

- This BMP may be implemented on a project-by-project basis with other BMPs when determined necessary and feasible by the RE.
- Severe erosion may result when slope drains fail by either over-topping, piping, or pipe separation.

Implementation:

- When designing slope drains:
  - Limit drainage area per pipe to 4 ha (10 ac). For larger areas, use a lined channel or a series of pipes.
  - Use interceptor dikes to direct surface runoff into the slope drain.
  - Can be placed on or buried underneath the slope surface.
- Consider the following for installing slope drains:
  - Install perpendicular to slope contours.
  - Protect area around inlet with filter cloth. Protect outlet with riprap or other energy dissipation device. For high energy discharges, reinforce riprap with concrete or use reinforced concrete device.
  - Compact soil around and under entrance, outlet and along length of pipe.
  - Securely anchor and stabilize pipe and appurtenances into soil.
  - A conceptual slope drain is shown in Figure 4-11.

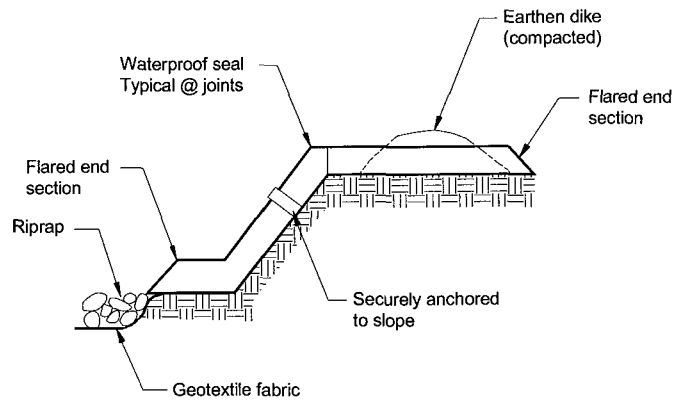

Note: Actual layout determined in the field.

Figure 4-11
Conceptual Slope Drain

Maintenance:

- Check outlet for erosion and downstream scour. If eroded, repair damage and install additional energy dissipation measures. If downstream scour is occurring, it may be necessary to reduce flows being discharged into the channel unless other preventive measures are implemented.
- Check slope drainage for accumulations of debris and sediment.

4.5.6 Temporary Stream Crossing

Description:

A temporary stream crossing is a structure placed across a waterway that allows vehicles to cross the waterway during construction without entering the water, eliminating erosion and downstream sedimentation caused by the vehicles.

Appropriate Applications:

Temporary stream crossings are typically installed at sites where appropriate permits have been secured (1601 Agreements, 404 Permits, and 401 Certifications), where construction equipment or vehicles need to frequently cross a waterway, when alternate access routes impose significant constraints, when crossing perennial streams or waterways causes significant erosion or where construction activities will not last longer than one year.

Implementation:

- Vehicles and equipment shall not be driven, operated, fueled, cleaned, maintained, or stored in the wet or dry portions of a water body where wetland vegetation, riparian vegetation or aquatic organisms may be destroyed, except as authorized by the RE, as necessary to complete the work.
- Temporary water body crossings and encroachments shall be constructed to minimize scour. Cobbles used for temporary water body crossings or encroachments shall be clean, rounded river cobble.
- The exterior of vehicles and equipment that will encroach on water bodies within the project shall be maintained free of grease, oil, fuel, and residues.
- Disturbance or removal of vegetation shall not exceed the minimum necessary to complete operations. Precautions shall be taken to avoid damage to vegetation by people or equipment.
- Riparian vegetation, when removed pursuant to the provisions of the work, shall be cut off no lower than ground level to promote rapid re-growth. Access roads and work areas built over riparian vegetation shall be covered by a sufficient layer of clean river run cobble to prevent damage to the underlying soil and root structure. The cobble shall be removed upon completion of project activities.
- Any temporary artificial obstruction placed within flowing water shall only be built from material, such as clean gravel or sand bags, that will cause little or no siltation.
- Drip pans shall be placed under all vehicles and equipment placed on docks, barges, or other structures over water bodies when the vehicle or equipment is planned to be idle for more than one hour.
- Conceptual temporary stream crossings are shown in Figure 4-12.

Maintenance:

- Check for blockage and silt buildup in the channel. Remove silt behind fords, in culverts and under bridges.
- Check for erosion of abutments, channel scour, riprap displacement or piping of soil.
- Replace aggregate from inlets and outlets of culverts.
- Remove temporary crossing promptly when it is no longer needed.

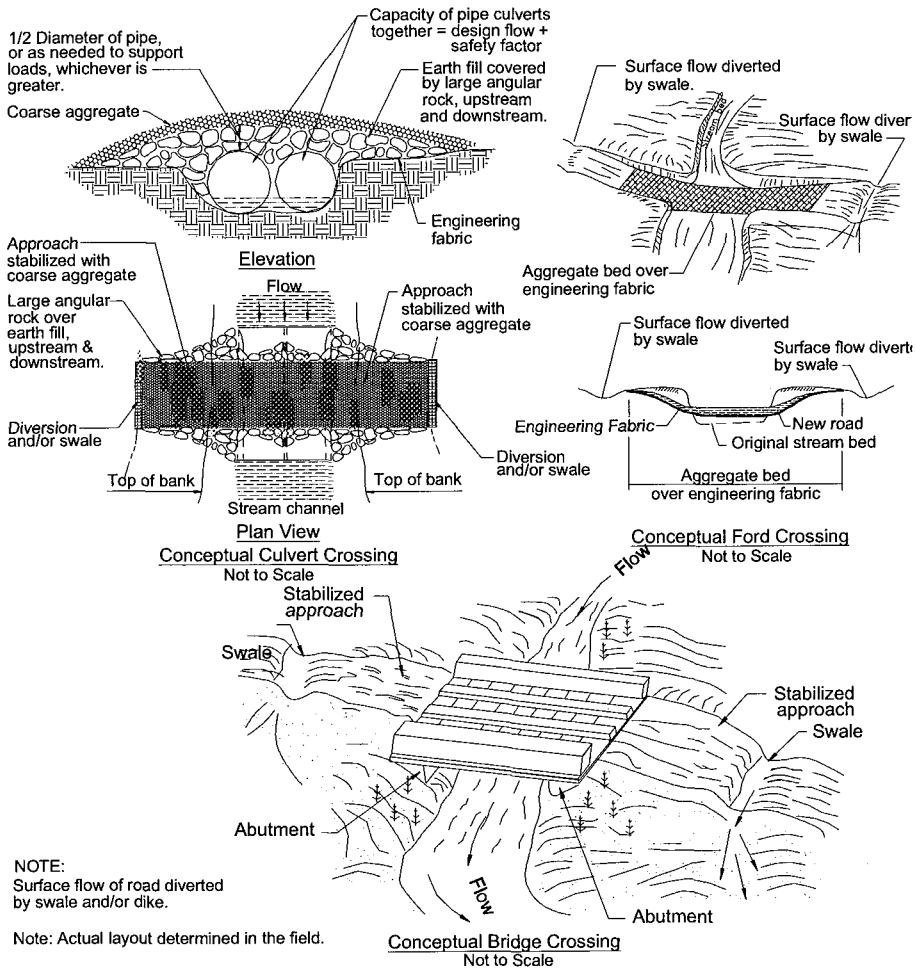

Figure 4-12
Conceptual Temporary Stream Crossings

4.5.7 Clear Water Diversion

Description:

Clear water diversion consists of a system of structures and measures that intercept clear surface water runoff upstream of a project site, transport it around the site and discharge it downstream with minimal water quality degradation for either the project construction operations or the construction of the diversion. Structures commonly used as part of this system include diversion ditches, berms, dikes, slope drains, drainage and interceptor swales.

Appropriate Applications:

A clear water diversion is typically implemented where appropriate permits (1601 Agreement) have been secured and work must be performed in a live stream or water body.

Implementation:

- Heavy equipment driven in wet portions of a water body to accomplish work shall be completely clean of petroleum residue, and water levels shall be below the gear boxes of the equipment in use or equipment lubricants and fuels shall be sealed such that inundation by water shall not result in leaks.
- Mechanical equipment operated in the water shall not be submerged to a point above any axle of said mechanical equipment.
- Excavation equipment buckets may reach out into the water for the purpose of removing or placing fill materials. Only the bucket of an excavator/backhoe may operate in water-covered portions of a water body. The main body of the crane/excavator/backhoe shall not enter water-covered portions of a water body, except as necessary to cross the stream to access the work site.
- Stationary equipment (such as motors and pumps) located within or adjacent to a water body shall be positioned over drip pans.
- When any artificial obstruction is being constructed, maintained or placed in operation, sufficient water shall at all times be allowed to pass downstream to maintain aquatic life downstream.
- The exterior of vehicles and equipment that will encroach on water body within the project shall be maintained free of grease, oil, fuel and residues.
- Disturbance or removal of vegetation shall not exceed the minimum necessary to complete operations. Precautions shall be taken to avoid damage to vegetation by people or equipment.
- Riparian vegetation, when removed pursuant to the provisions of the work, shall be cut off no lower than ground level to promote rapid re-growth. Access roads and work areas built over riparian vegetation shall be covered by a sufficient layer of clean river run cobble to prevent damage to the underlying soil and root structure. The cobble shall be removed upon completion of project activities.
- Drip pans shall be placed under all vehicles and equipment placed on docks, barges, or other structures over water bodies when the vehicle or equipment is planned to be idle for more than one hour.

Maintenance:

Check embankments and diversion for damage to the linings, accumulating debris, sediment buildup and adequacy of the slope protection. Remove debris and repair linings and slope protection as required.

4.5.8 Wind Erosion Control

Description:

Wind erosion control consists of applying water or other dust palliatives as necessary to prevent or alleviate dust nuisance. Dust control shall be applied in accordance with Caltrans standard practices. Covering of small stockpiles or areas is an alternative to applying water or other dust palliatives.

Appropriate Applications:

This practice is typically implemented on all exposed soils subject to wind erosion.

Implementation:

- Water shall be applied by means of pressure-type distributors or pipelines equipped with a spray system or hoses and nozzles that will ensure even distribution.
- All distribution equipment shall be equipped with a positive means of shutoff.
- Unless water is applied by means of pipelines, at least one mobile unit shall be available at all times to apply water or dust palliative to the project.
- If reclaimed waste water is used, the sources and discharge shall meet California Department of Health Services water reclamation criteria and the RWQCB requirements. Nonpotable water shall not be conveyed in tanks or drain pipes that will be used to convey potable water, and there shall be no connection between potable and nonpotable supplies. Nonpotable tanks, pipes, and other conveyances shall be marked "NONPOTABLE WATER – DO NOT DRINK."
- Materials applied as temporary soil stabilizers will also provide wind erosion control benefits.

Maintenance:

Check areas protected to ensure proper coverage. See specific wind erosion control BMP or implement requirements of Section 10 of the Caltrans Standard Specifications as appropriate.

4.5.9 Sediment Tracking Control

Street Sweeping and Vacuuming

Description:

The purpose of street sweeping and vacuuming is to remove tracked sediment so that the sediment does not enter a storm drain or watercourse.

Appropriate Applications:

Street sweeping and vacuuming is typically implemented anywhere sediment is tracked from the project site onto public or private paved roads (typically points of egress).

Maintenance:

- Substantially visible sediment tracking shall be swept or vacuumed on a daily basis.
- If not mixed with debris or trash, consider incorporating the removed sediment back into the project area.

Stabilized Construction Roadway

Description:

A stabilized construction roadway is a temporary access road connecting existing public roads to a remote construction area. It is designed for the control of dust and erosion created by vehicular tracking.

Appropriate Applications:

This measure applies to construction roadways and short-term detour roads, during wet weather conditions when mud tracking is a problem, and during dry weather conditions, when dust is a problem. This BMP may be implemented on a project-by-project basis with other BMPs when determined necessary and feasible by the RE.

Implementation:

- Properly grade roadway to prevent runoff from leaving construction site.
- Stabilize roadway using aggregate, asphalt concrete or concrete based on site conditions.
- If aggregate is selected, place aggregate over geotextile fabric.

Maintenance:

- Check for damage and repair as needed.
- Keep all temporary roadway ditches clear.

Entrance/Outlet Tire Wash

Description:

A tire wash is an area located at stabilized construction roadway egress points to remove sediment from tires and undercarriages and to prevent sediment from being transported onto public roadways.

Appropriate Applications:

Entrance/outlet tire washes may be used on construction sites where dirt and mud tracking onto public roads by construction vehicles may occur.

- This BMP may be implemented on a project-by-project basis with other BMPs when determined necessary and feasible by the RE.
- Requires a supply of wash water.
- Requires a turnout or doublewide exit to avoid having entering vehicles drive through the wash area.

Implementation:

- Incorporate with a stabilized construction roadway.
- Construct on level ground when possible, on a pad of coarse aggregate.
- Wash rack shall be designed for anticipated traffic loads.
- Provide a drainage ditch that will convey the runoff from the wash area to a sediment-trapping device.
- Ditch shall be of sufficient grade, width, and depth to carry the wash runoff.
- Remove accumulated sediment in wash rack and/or sediment trap to maintain system performance.
- A conceptual entrance/outlet tire wash is shown in Figure 4-13.

Maintenance:

Remove accumulated sediment in wash rack and/or sediment trap to maintain system performance.

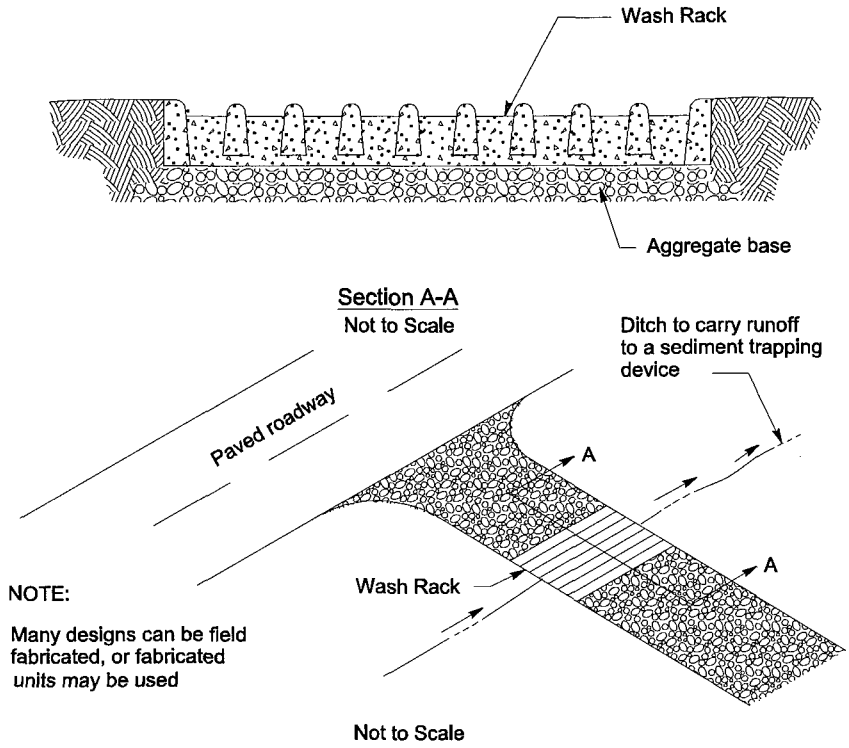

Note: Actual layout determined in the field.

Figure 4-13
Conceptual Entrance/Outlet Tire Wash

4.5.10 Waste Management

Waste management consists of implementing procedural and structural BMPs for handling, storing, and disposing of wastes generated by a construction project to prevent the release of waste materials into storm water discharges. Waste management includes the following BMPs:

- Spill Prevention and Control;
- Solid Waste Management;
- Hazardous Waste Management;
- Contaminated Soil Management;
- Concrete Waste Management;

- Sanitary/Septic Waste Management; and
- Liquid Waste Management.

These controls shall be implemented for all applicable activities, material usage and site conditions.

Spill Prevention and Control

Description:

Spill prevention and `control procedures and practices are typically implemented to prevent and control spills in a manner that minimizes or prevents the discharge of spilled material to drainage systems or watercourses.

Appropriate Applications:

Spill prevention and control procedures are typically implemented wherever chemicals and/or hazardous substances are stored. Substances may include, but are not limited to, soil stabilizers, dust palliatives, herbicides, growth inhibitors, fertilizers, de-icing chemicals, fuels, lubricants and other petroleum distillates. To the extent that the work can be accomplished safely, spills of oil, petroleum products, substances listed under Title 40 of the Code of Federal Regulations (CFR) Parts 110, 117, and 302, and sanitary and septic wastes shall be contained and cleaned up immediately.

Implementation:

- To the extent that this action does no't compromise cleanup activities, spills shall be covered and protected from storm water run-on during rainfall.
- Spills shall not be buried or washed with water.
- Used cleanup materials, contaminated materials and recovered spill material that is no longer suitable for its intended purpose shall be stored and disposed of in conformance with these special provisions.
- Water used for cleaning and decontamination shall not be allowed to enter storm drains or watercourses.
- Water overflow or minor water spillage shall be contained and shall not be allowed to discharge into drainage facilities or water courses.
- Proper storage, cleanup and spill reporting instructions for hazardous materials stored or used on a project site shall be posted at all times in an open, conspicuous and accessible location.
- Waste storage areas shall be kept clean, well organized and equipped with ample cleanup supplies that are appropriate for the materials being stored. Perimeter controls, containment structures, covers, and liners shall be repaired or replaced as needed to maintain proper function.

Maintenance:

- Verify that spill control cleanup materials are located near material storage, unloading, and use areas.
- Update spill prevention and control plans and stock appropriate cleanup materials whenever changes occur in the types of chemicals stored on-site.

Solid Waste Management

Description:

Solid waste management procedures and practices are designed to minimize or eliminate the discharge of pollutants to drainage systems or watercourses as a result of the creation, stockpiling or removal of construction site wastes.

Appropriate Applications:

Solid waste management practices are typically implemented on construction projects that generate solid wastes. These solid wastes include but are not limited to:

- Construction wastes, including brick, mortar, timber, steel and metal scraps, pipe and electrical cuttings, nonhazardous equipment parts, styrofoam and other materials used to transport and package construction materials.
- Highway planting wastes, including vegetative material, plant containers and packaging materials; and
- Litter, including food containers, beverage cans, coffee cups, paper bags, plastic wrappers and smoking materials, including litter generated by the public.

Implementation:

- Littering on the project site shall be prohibited.
- Trash receptacles shall be provided in the contractor's yard, field trailer areas, and at locations where workers congregate for lunch and break periods.
- Litter from work areas within the construction limits of the project site shall be collected and placed in watertight dumpsters at least weekly.
- Full dumpsters shall be removed from the project site and the contents shall be disposed of properly.
- Storm water run-on shall be prevented from contacting stored solid waste through the use of berms, dikes, or other temporary diversion structures or through the use of measures to elevate waste from site surfaces.
- Solid waste storage areas shall be located at least 15m from drainage facilities and watercourses and shall not be located in areas prone to flooding or ponding.

- Except during fair weather, construction and highway planting waste not stored in watertight dumpsters shall be securely covered with tarps or plastic sheeting or protected in conformance with the applicable DSA protection section.
- Dumpster washout on the project site shall not be allowed.

Maintenance:

- A foreman and/or construction supervisor shall monitor on-site solid waste storage and disposal procedures.
- Keep the site clean of litter and debris.

Hazardous Waste Management

Description:

Hazardous waste management procedures and practices are designed to minimize or eliminate the discharge of pollutants from construction site hazardous waste to storm drain systems or watercourses.

Appropriate Applications:

Hazardous waste management practices are typically implemented on construction projects that generate waste from the use of petroleum products, asphalt products, concrete curing compounds, pesticides, palliatives, acids, septic wastes, paints, solvents, wood preservatives, stains, roofing tar and any materials deemed a hazardous waste in California.

Implementation:

- Wastes shall be stored in sealed containers constructed of a suitable material and shall be labeled as required by Title 22 of the California Code of Regulations (CCR), Division 4.5 and 49 CFR Parts 172,173, 178, and 179.
- All hazardous waste shall be stored, transported, and disposed as required in Title 22 CCR, Division 4.5 and 49 CFR Parts 261–263.
- Waste containers shall be stored in temporary containment facilities.
    1. A temporary containment facility shall provide for a spill containment volume equal to 1.5 times the volume of all containers in the facility.
    2. A temporary containment facility shall be impervious to the materials stored there for a minimum contact time of 72 hours.
    3. A temporary containment facility shall be maintained free of accumulated rainwater and spills.

4. Sufficient separation shall be provided between stored containers to allow for spill cleanup and emergency response access.
5. Incompatible materials, including chlorine and ammonia, shall not be stored in the same temporary containment facility.
6. Throughout the rainy season, each temporary containment facility shall be covered during nonworking days and prior to rain events.

- Drums shall not be overfilled and wastes shall not be mixed.
- Unless watertight, containers of dry waste shall be stored on pallets.
- Waste shall be disposed of properly within 90 days of being generated.
- To minimize on-site storage, full containers of waste shall be disposed of properly at least weekly. In no case shall hazardous waste storage exceed the requirements in Title 22 CCR, Section 66262.34.
- Paint brushes and equipment for water- and oil-based paints shall be cleaned within a contained area and shall not be allowed to contaminate site soils, a watercourse or drainage system. Waste paints, thinners, solvents, residues, and sludges that cannot be recycled or reused shall be disposed of as hazardous waste. When thoroughly dry, latex paint and paint cans, used brushes, rags, absorbent materials and drop cloths can be disposed of as solid waste.

Maintenance:

A foreman and/or construction supervisor shall monitor on-site hazardous waste storage and disposal procedures.

Contaminated Soil Management

Description:

These are procedures and practices to minimize or eliminate the discharges of pollutants from contaminated soil to drainage systems or watercourses.

Appropriate Applications:

Contaminated soil management is typically implemented on construction projects in highly urbanized or industrial areas where soil pollution may have occurred due to spills, illicit discharges or leaks from underground storage tanks. Contaminated soil management may also apply to highway widening projects in older areas where median and shoulder soils may have been contaminated by aerially deposited lead.

Implementation:

Identifying Contaminated Areas

- Contaminated soils are often identified during project planning and development. Known locations of contaminated soils are identified in the plans and specifications.

Education

- Prior to performing any excavation work at locations identified as containing material classified as hazardous, employees and subcontractors shall complete a safety training program that meets the requirements of 29 CFR 1910.120 and 8 CCR 5192.
- Employees and subcontractors shall be educated and instructed in the identification of contaminated soil and on contaminated soil handling and disposal procedures.
- Meetings to discuss and reinforce disposal procedures shall be held or incorporated into regular safety meetings.

Handling Procedures for Material with Aerially Deposited Lead

- Materials from areas designated as containing aerially deposited lead may, if allowed by the contract, be excavated, transported and used in the construction of embankments and/or backfill.
- Excavation, transportation and placement operations shall result in no visible dust. Methods shall be employed to prevent spillage of lead-containing material during transport. Air quality shall be monitored during excavation of soils contaminated with lead.

Handling Procedures for Contaminated Soils

- Test suspected soils at a Caltrans-approved certified laboratory.
- If the soil is contaminated, work with the local regulatory agencies to develop options for treatment and/or disposal. Avoid temporary stockpiling of contaminated soils or hazardous material.
- If temporary stockpiling is necessary:
  - Cover the stockpile with plastic sheeting or tarps.
  - Install a berm around the stockpile to prevent runoff from leaving the area.
  - Do not stockpile in or near storm drains or watercourses.
- Contaminated material and hazardous material on the exterior of a transport vehicle shall be removed and placed either into the current transport vehicle or the excavation prior to the vehicle leaving the exclusion zone.

- Monitor the air quality continuously during excavation operations at all locations containing hazardous material.
- Procure all permits and licenses, pay all charges and fees and give all notices necessary and incident to the due and lawful prosecution of the work, including registration for transporting vehicles carrying the contaminated material and the hazardous material.
- Collect water from decontamination procedures and dispose of at an appropriate disposal site.
- Collect nonreusable protective equipment after use by any personnel and dispose of at an appropriate disposal site.
- Excavation, transport, and disposal of contaminated material and hazardous material shall be in accordance with the rules and regulations of the following agencies (the specifications of these agencies supersede the procedures outlined in this BMP):
  - United States Department of Transportation (USDOT);
  - United States Environmental Protection Agency (USEPA);
  - California Environmental Protection Agency (Cal/EPA);
  - California Division of Occupation Safety and Health Administration (Cal/OSHA); and
  - Local regulatory agencies.

Procedures for Underground Storage Tank Removals

- As directed by the RE, arrange to test any liquid or sludge found in the underground tank prior to its removal to determine if it contains hazardous material.
- After tank removal, take soil samples beneath the excavated tank and perform analysis as required by the local agency representatives.
- The underground storage tank, any liquid and/or sludge found within the tank, and all contaminated material and hazardous material removed during the tank removal shall be transported to disposal facilities permitted to accept such material.

Water Control

- Take all necessary precautions and preventive measures to prevent the flow of water, including groundwater, from entering hazardous material or underground storage tank excavations. Such preventative measures may consist of, but are not limited to, berms, cofferdams, grout curtains, freeze walls, seal course concrete or any combination thereof.
- If water does enter an excavation and becomes contaminated, such water, when necessary to proceed with the work, shall be discharged to clean, closed top,

watertight, transportable holding tanks, and disposed of in accordance with federal, state, and local laws.

Maintenance:

A foreman and/or construction supervisor shall monitor on-site contaminated soil storage and disposal procedures.

Concrete Waste Management

Description:

Concrete waste management procedures and practices are designed to minimize or eliminate the discharge of concrete waste materials to storm drain systems or watercourses.

Appropriate Applications:

Concrete waste management practices are typically implemented on construction projects where concrete is used as a construction material or where concrete dust and debris result from demolition activities.

Implementation:

- Portland cement concrete and asphalt concrete waste shall not be allowed to enter storm water drainages or watercourses.
- Portland cement concrete and asphalt concrete waste shall be collected and properly disposed of or placed in a temporary concrete washout facility as shown conceptually in Figure 4-14.

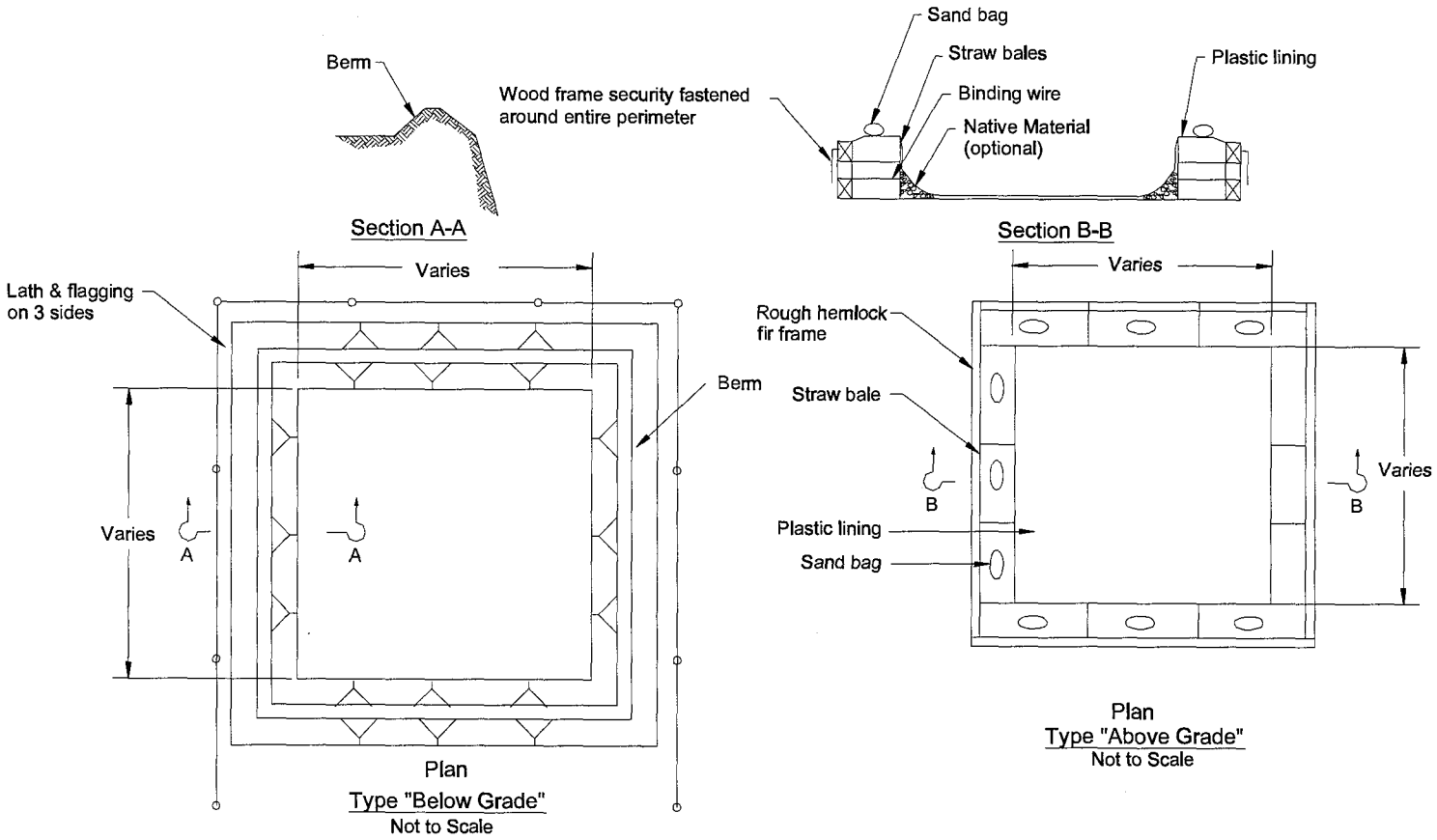

Note: Actual layout determined in the field.

Figure 4-14
Conceptual Temporary Concrete Washout

- A sign shall be installed adjacent to each temporary concrete washout facility to inform concrete equipment operators to utilize the proper facilities.
- Below-grade concrete washout facilities are typical. Above-grade facilities are used if excavation is not practical.

Maintenance:

- A foreman and/or construction supervisor shall monitor on-site concrete waste storage and disposal procedures.
- A foreman and/or construction supervisor shall monitor on-site concrete working tasks, such as saw cutting, coring, grinding and grooving to ensure proper methods are implemented.

Sanitary/Septic Waste Management

Description:

Sanitary/septic waste management procedures and practices are designed to minimize or eliminate the discharge of construction site sanitary/septic waste materials to storm drain systems or watercourses.

Appropriate Applications:

Sanitary/septic waste management practices are typically implemented on all construction sites that use temporary or portable sanitary/septic waste systems.

Implementation:

- Temporary sanitary facilities shall be located away from drainage facilities and watercourses. When subjected to high winds or risk of high winds, as determined by the RE, temporary sanitary facilities shall be secured to prevent overturning.
- Wastewater shall not be discharged or buried within the highway right-of-way.

Maintenance:

A foreman and/or construction supervisor shall monitor on-site sanitary/septic waste storage and disposal procedures.

Liquid Waste Management

Description:

Liquid waste management procedures and practices are designed to prevent the discharge of pollutants to storm drain systems or water courses as a result of the creation, collection, or disposal of nonhazardous liquid.

Appropriate Applications:

Liquid waste management is typically applicable to construction projects that generate any of the following nonhazardous byproducts, residuals or wastes: drilling slurries and drilling fluids; grease-free and oil-free wastewater and rinse water; dredging; and other non–storm water liquid discharges not permitted by separate permits.

Implementation:

- Drilling residue and drilling fluids shall not be allowed to enter storm drains or watercourses and shall be properly disposed of.
- If an appropriate location is available, as determined by the RE, drilling residue and drilling fluids that are exempt under 23 CCR §2511(g) may be dried by infiltration and evaporation in a temporary concrete washout facility.
- See Section 4.5.11, Materials Handling, for appropriate handling and storage of liquid wastes.

Maintenance:

- Spot-check employees and subcontractors throughout the duration of construction to ensure appropriate practices are being implemented.
- Remove deposited solids in containment areas and capturing devices as needed and at the completion of the task.
- Check containment areas and capturing devices frequently for damage and repair as needed.

4.5.11 Materials Handling

Materials handling consists of implementing procedural and structural BMPs for handling, storing and using construction materials to prevent the release of those materials into storm water discharges.

These controls shall be implemented for all applicable activities, material usage and site conditions.

Material Delivery and Storage

Description:

Material delivery and storage procedures and practices are designed for the proper handling and storage of materials in a manner that minimizes or eliminates the discharge of these materials to storm water drainage systems or watercourses.

Appropriate Applications:

These procedures are typically implemented at all construction sites with delivery and storage of soil, pesticides, fertilizers, detergents, plaster, petroleum products, asphalt and concrete components, hazardous chemicals, concrete compounds or other materials that may be detrimental if released to the environment.

Implementation:

- Liquids, petroleum products, and substances listed in 40 CFR Parts 110, 117, or 302 shall be stored in approved containers and drums and shall not be overfilled. Containers and drums shall be placed in temporary containment facilities for storage.

  1. A temporary containment facility shall provide for a spill containment volume equal to 1.5 times the volume of all containers in the facility.
  2. A temporary containment facility shall be impervious to the materials stored there for a minimum contact time of 72 hours.
  3. A temporary containment facility shall be maintained free of accumulated rainwater and spills.
  4. Sufficient separation shall be provided between stored containers to allow for spill cleanup and emergency response access.
  5. Incompatible materials, including chlorine and ammonia, shall not be stored in the same temporary containment facility.
  6. Throughout the rainy season, each temporary containment facility shall be covered during nonworking days and prior to rain events.
  7. Materials shall be stored in their original containers and the original product labels shall be maintained in place in a legible condition. Damaged or otherwise illegible labels shall be replaced immediately.

- Bagged and boxed materials shall be stored on pallets and shall not be allowed to accumulate on the ground.
- To provide protection from wind and rain, throughout the rainy season, bagged and boxed materials shall be covered during nonworking days and prior to rain events.
- Storage areas shall be kept clean, well organized, and equipped with ample cleanup supplies as appropriate for the materials being stored. Perimeter controls, containment structures, covers, and liners shall be repaired or replaced as needed to maintain proper function.

Maintenance:

- Check to ensure that designated storage areas are kept clean and well organized.
- Repair and/or replace perimeter controls, containment structures, and covers as needed to keep them functioning properly.

Material Use

Description:

Material use procedures and practices are designed for use of construction material in a manner that minimizes or eliminates the discharge of these materials to storm drain systems or watercourses.

Appropriate Applications:

These procedures are typically implemented at construction sites where pesticides, fertilizers, detergents, plaster, petroleum products, asphalt and concrete components, hazardous chemicals, concrete compounds and other material that may be detrimental if released to the environment are used or prepared on-site.

Implementation:

- Latex paint and paint cans, used brushes, rags, absorbent materials and drop cloths, when thoroughly dry and no longer hazardous, may be disposed of with other construction debris.
- Do not remove the original product label from a container, as it contains important safety and disposal information. Use all of the product before disposing of the container.
- Mix paint indoors or in a containment area. Never clean paint brushes or rinse paint containers into a street, gutter, storm drain or watercourse. Dispose of any paint, thinners, residue or sludges that cannot be recycled as hazardous waste.
- For water-based paints, paint out brushes to the extent practical and rinse to a drain leading to a sanitary sewer, where permitted or into a concrete washout pit or temporary sediment trap. For oil-based paints, paint out brushes to the extent practical and filter and reuse thinners and solvents.
- Use recycled and less hazardous products when practical. Recycle residual paints, solvents, nontreated lumber and other materials.
- Use materials only where and when needed to complete the construction activity. Use safer alternative materials as much as possible. Reduce or eliminate use of hazardous materials on-site when practical.
- Do not over-apply fertilizers and pesticides. Prepare only the amount needed. Follow strictly the recommended usage instructions. Apply surface dressings in

smaller applications, as opposed to one large application, to allow time for them to work in and to avoid excess materials being carried off-site by runoff.

- Keep an ample supply of spill cleanup material near material use areas. Train employees in spill cleanup procedures.

Maintenance:

Spot-check employees and subcontractors throughout the duration of construction job to ensure appropriate practices are being implemented.

4.5.12 Vehicle and Equipment Operations

Vehicle and equipment operations procedures and practices are designed to minimize or eliminate the discharge of pollutants from vehicle and equipment cleaning, fueling and maintenance operations to storm water drainage systems or watercourses.

These controls shall be implemented for all applicable activities, material usage, and site conditions.

Vehicle and Equipment Cleaning

Description:

Vehicle and equipment cleaning procedures and practices are typically used to minimize or eliminate the discharge of pollutants from vehicle and equipment cleaning operations to storm drain systems or watercourses.

Appropriate Applications:

These procedures are typically applied on all construction sites where vehicle and equipment cleaning is performed.

Implementation:

- Onsite vehicle and equipment washing is discouraged.
- Vehicle and equipment wash water shall be contained for percolation or evaporative drying away from storm drain inlets or watercourses and shall not be discharged within the highway right-of-way.
- Cleaning with soap, solvents, or steam shall not occur on the project site unless the RE has been notified in advance and the resulting wastes are fully contained and are not discharged or buried within the highway right-of-way.

Maintenance:

Monitor employees and subcontractors throughout the duration of the construction project to ensure appropriate practices are being implemented.

Vehicle and Equipment Fueling

Description:

Vehicle and equipment fueling procedures and practices are designed to minimize or eliminate the discharge of fuel spills and leaks into storm drain systems or watercourses.

Appropriate Applications:

These procedures are typically applied on all construction sites where vehicle and equipment fueling takes place.

Implementation:

- Drip pans shall be used during vehicle and equipment fueling unless the fueling is performed over an impermeable surface in a dedicated fueling area. Dedicated fueling areas shall be protected from storm water run-on and runoff and shall be located at least 15m from downstream drainage facilities or watercourses.
- Nozzles used in vehicle and equipment fueling shall be equipped with an automatic shutoff to control drips.
- Fueling operations shall not be left unattended.
- Absorbent spill cleanup materials shall be available in fueling and maintenance areas and shall be disposed properly after use.
- Vehicles and equipment leaks shall be inspected on each day of use. Leaks shall be repaired immediately or problem vehicles or equipment shall be removed from the project site.

Maintenance:

- Keep an ample supply of spill cleanup material on-site.
- Immediately clean up spills and properly dispose of contaminated soil and cleanup material.

Vehicle and Equipment Maintenance

Description:

Vehicle and equipment maintenance procedures and practices are designed to minimize or eliminate the discharge of pollutants to storm drain systems or watercourses from vehicle and equipment maintenance procedures.

Appropriate Applications:

These procedures are typically applied on all construction projects where an on-site yard area is necessary for storage and maintenance of heavy equipment and vehicles.

Implementation:

- Drip pans shall be used during vehicle and equipment maintenance work that involves fluids unless the maintenance work is performed over an impermeable surface in a dedicated maintenance area. Dedicated maintenance areas shall be protected from storm water run-on and runoff and shall be located at least 15m from downstream drainage facilities or watercourses.
- Drip pans shall be placed under all vehicles and equipment placed on docks, barges, or other structures over water bodies when the vehicle or equipment is planned to be idle for more than one hour.
- Vehicles and equipment leaks shall be inspected on each day of use. Leaks shall be repaired immediately or problem vehicles or equipment shall be removed from the project site.

Maintenance:

- Maintain waste fluid containers in leak-proof condition.
- Check equipment for damaged hoses and leaky gaskets routinely. Repair or replace as needed.

4.5.13 Paving Operations

Description:

Paving operations procedures are designed to minimize pollution of storm water runoff during paving operations.

Appropriate Applications:

These procedures are typically implemented where paving, surfacing, resurfacing, or sawcutting may pollute storm water runoff or discharge to storm drain systems or watercourses.

Implementation:

- Substances used to coat asphalt transport trucks and asphalt spreading equipment shall not contain soap and shall be nonfoaming and nontoxic.
- Drainage inlet structures and manholes shall be covered with filter fabric when seal coat, tack coat, slurry seal or fog seal is applied to adjacent surfaces. Seal coat, tack coat, slurry seal, or fog seal shall not be applied if rainfall or thunderstorms are predicted to occur during the application or curing period.

Maintenance:

- Maintain machinery regularly to minimize leaks and drips.
- Ensure that employees and subcontractors are implementing appropriate measures during paving operations.

4.5.14 Stockpile Management

Description:

Procedures and practices designed to reduce or eliminate pollution of storm water from stockpiles of soil and paving materials.

Appropriate Applications:

Typically implemented anywhere soil and paving materials are stockpiled.

Implementation:

- Protection of stockpiles is a year-round requirement.
- All stockpiles shall be located away from concentrated flows of storm water, drainage courses, and inlets.
- All stockpiles shall be protected from storm water run-on, using berms, dikes or other temporary diversion BMPs.
- Wind erosion control practices shall be implemented as appropriate on all stockpiled material. For specific information, see Section 4.5.8.
- Stockpiles of contaminated soil shall be managed in accordance with the Contaminated Soil Management BMP.
- Nonactive stockpiles of the identified materials shall be protected further as follows:
  - Soil stockpiles
    - During the rainy season, soil stockpiles shall be covered or protected with soil stabilization measures and a temporary perimeter sediment barrier at all times.
    - During the non-rainy season, soil stockpiles shall be covered or protected with a temporary perimeter sediment barrier prior to the onset of precipitation.
  - Stockpiles of Portland cement concrete rubble, asphalt concrete, asphalt concrete rubble, aggregate base, or aggregate subbase:
    - During the rainy season, the stockpiles shall be covered or protected with a temporary perimeter sediment barrier at all times.

    - During the non-rainy season, the stockpiles shall be covered or protected with a temporary perimeter sediment barrier prior to the onset of precipitation.
  - Stockpiles of "cold mix" asphalt (pre-mixed aggregate and asphalt binder):
    - During the rainy season, these stockpiles shall be placed on and covered with plastic or comparable material at all times.
    - During the dry season, these stockpiles shall be placed on and covered with plastic or comparable material prior to the onset of precipitation.
- Active stockpiles of the identified materials shall be protected further as follows:
  - All stockpiles shall be covered or protected with a temporary linear sediment barrier prior to the onset of precipitation.
  - Stockpiles of "cold mix" shall be covered with plastic or comparable material prior to the onset of precipitation.

Maintenance:

Repair and/or replace perimeter controls and covers as needed to keep them functioning properly.

4.5.15 Water Conservation Practices

Description:

Water conservation practices are activities that use water during the construction of a project in a manner that avoids causing erosion and/or the transport of pollutants off-site.

Appropriate Applications:

Water conservation practices are typically used on all construction sites where water is used.

Implementation:

- Keep water equipment in good working condition.
- Repair water leaks promptly.
- Discourage washing of equipment on the construction site.
- Avoid using water to clean construction areas. Sweep paved areas where practical.
- Direct construction water runoff to areas where it can soak into the ground.

Maintenance:

Repair water equipment as needed.

4.5.16 Potable Water/Irrigation

Description:

This BMP is intended to reduce the possibility for the discharge of potential pollutants generated during discharges from irrigation water lines, landscape irrigation, lawn or garden watering, planned and unplanned discharges from potable water sources, water line flushing and hydrant flushing.

Appropriate Applications:

This BMP should be implemented on a site-specific basis whenever the above activities or discharges occur at or enter a construction site.

Implementation:

- Where possible, direct water from off-site sources around or through a construction site in a way that minimizes contact with the construction site.
- When possible, the rinse water from the activity of flushing water lines should be reused for landscaping purposes.
- Shut off the water source from a broken line, sprinkler, or valve as soon as possible to prevent excess water flow.
- Schedule necessary repairs on broken water lines as soon as possible.
- Protect downstream storm water drainage systems and watercourses from water pumped or bailed from trenches excavated to repair water lines.
- If an irrigated area is within the construction limits, inspect the irrigation system to ensure that the appropriate amount of water is being used and runoff is minimized. Consider factors such as soil structure, grade, time of year, and type of plant material in determining the proper amounts of water for a specific area.

4.5.17 Dewatering Operations

Dewatering Operations

Description:

Dewatering operations are practices that manage the discharge of pollutants from groundwater and accumulated precipitation dewatering operations.

Appropriate Applications:

These practices are typically implemented where groundwater or accumulated precipitation will be discharged from a construction site.

Implementation:

- The flow chart shown in Figure 4-15 shall be utilized to guide dewatering operations.
- The RE will coordinate monitoring and permit compliance.
- Discharges must comply with regional and watershed-specific discharge requirements.
- Ensure that dewatering discharges do not cause erosion at the discharge point.
- Sediment Control Treatment: Dewatering effluent (groundwater and accumulated precipitation) that is laden with suspended solids shall be treated by a device designed to remove soil particles down to 0.02 mm in size.

5.1 TREATMENT BMPs

Where there is, or is proposed to be, a storm drain system with a drainage pipe or collection ditch discharging into either a receiving water or a downstream storm drain system owned by others, the treatment BMPs listed in Table 5-1 will be considered and installed where feasible. These BMPs apply to both improvement projects and existing discharges.

TABLE 5-1: APPROVED TREATMENT BMPs (CATEGORY III)

Biofiltration: Swales and Strips
Infiltration Basins
Detention Devices
Traction Sand Traps
Dry Weather Flow Diversion

The approved BMPs listed in Table 5-1 are considered to be technically and fiscally feasible in a generic sense. In the experience of Caltrans, these BMPs have been found to be constructable, maintainable, and effective at removing pollutants. However, these BMPs are neither guaranteed to produce water that fully achieves any particular beneficial use, nor guaranteed to be feasible at every location. As described in Appendix B of the Statewide SWMP, the BMPs in Table 5-1 have been examined for fiscal feasibility and approved for deployment.

On all transportation improvement projects, the Project Engineer will maximize vegetation-covered soil areas consistent with existing Caltrans policies. These areas are treatment zones known as biofiltration strips (overland flow areas) and biofiltration swales (vegetated ditches).

In addition, on all significant construction or reconstruction projects proposing to add or modify existing storm drain system outfalls:

- The Project Engineer will consider approved treatment BMPs at each location where a pipe or drainage ditch discharges into a receiving water or a downstream storm drain system owned by others. This consideration process will require a site-by-site determination of feasibility.
- The Project Engineer will report on the feasible treatment opportunities, their costs, and the water quality benefits that would be realized with deployment.
- The Project Manager will then request that the appropriate funding authority consider allocating funds to include these treatment BMPs in the project.

On existing storm drain systems:

- Caltrans will undertake an inventory of all existing drainage pipe or collection ditch locations discharging into a receiving water or a downstream storm drain system owned by others.

- At each location, Caltrans will determine the feasibility of treatment BMPs, their costs, and the water quality benefits that would be realized with deployment.
- Caltrans will then request that the appropriate funding authorities consider allocating funds to install these treatment BMPs.

Procedures for determining which treatment BMPs should be considered at a given site are described in Section 5.2. Guidance in determining the volume of water to treat is presented in Section 5.3. Section 5.4 contains descriptions of the approved BMPs and guidance for determining their feasibility at any particular site.

In general, this document provides guidance, but does not a substitute for fundamental engineering knowledge, experience, and the application of sound engineering judgment. Because storm water quality management is evolving rapidly, the guidance in this section will be amended or changed as conditions warrant. The designer must integrate this guidance with that provided in Caltrans policies and procedures.

5.2 BMP SELECTION PROCEDURES

A procedure for the order of consideration of approved BMPs is described below. Section 5.2.2 contains guidance for site-specific determinations of BMP feasibility.

5.2.1 General BMP Selection

A flow chart illustrating the BMP selection procedure is shown in Figure 5-1.

Biofiltration swales and strips are to be implemented at all sites to the extent possible and to the extent that implementation is consistent with existing Caltrans policies. In practice this means maximizing the use of vegetation in the right-of-way. Further guidance can be found in Section 5.4.

Dry weather diversions can be feasible in uncommon situations. If the criteria described in Section 5.4 are met at a particular site, a dry weather diversion should be considered for deployment.

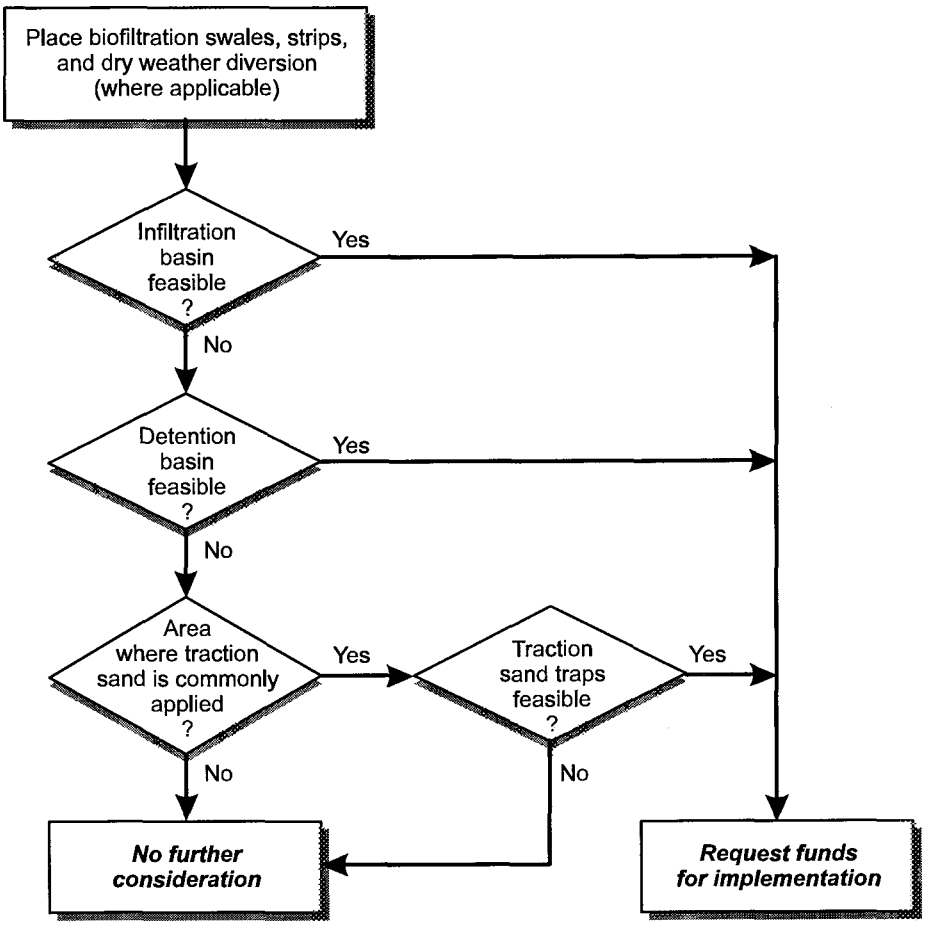

Figure 5-1
Decision Process for Selecting Treatment BMPs at Specific Sites

Infiltration basins should be considered first. If they are found to be feasible, funds for deployment should be requested from the funding authority. If infiltration is not feasible at a specific site, detention devices should be evaluated. Despite the likely exceedance of Tahoe Basin groundwater discharge standards, the Lahontan regional board staff has requested consideration of infiltration basins where pretreatment can be provided. Where pretreatment is not feasible, Caltrans will consult with the RWQCB to discuss available options.

If detention basins are found to be technically feasible, funds for deployment should be requested from the funding authority.

If detention devices are not technically feasible at a specific site, no other BMPs have been approved for consideration except in mountain regions where traction sand is commonly

applied during winter snow storms. In these locations, the feasibility of traction sand traps should be evaluated. Where they are feasible, funding should be requested. If they are not feasible, no further consideration needs to be given to BMP deployment.

Consideration should also be given to treatment trains, where feasible. Also, the overflow of some BMPs could be treated by a BMP such as a bioswale. Combining BMPs in series or in parallel could enhance treatment in a cost effective manner, depending on the BMP and the site conditions.

5.2.2 Site-Specific Determination of Feasibility

The first step in assessing feasibility is to gather the data needed to determine the size of the BMP and whether or not the site characteristics, particularly the soil, are appropriate. A listing of the data needed can be found in Table 5-2.

Next, determine the water quality volume (or for traction sand traps, the flow during the water quality design storm) that must be treated. (See Section 5.3 for guidance.) In very small drainage areas, it may be impractical to construct a BMP to treat the resulting small water quality volume (or flow).

Next, calculate the size of the proposed BMP needed to treat the water quality volume (or flow). Guidance for making these calculations can be found in Section 5.4 and other sources.

TABLE 5-2: DATA NEEDS FOR TREATMENT BMPs

OUTFALL INVENTORY

TRIBUTARY DRAINAGE AREA

SITE HYDROLOGY: Design storms, runoff coefficients, etc., needed to meet Caltrans hydraulic design criteria

WATER QUALITY TREATMENT VOLUME CALCULATED FROM WATER QUALITY DESIGN STORM OBTAINED FROM:

a. SWMP Practice Guidelines (this document) Table 5-3, or at http://www.stormwater.water-programs.com
b. Calculated by Project Engineer (see website above)

SITE PLANS AND ADJACENT LAND USES FROM AERIAL PHOTOGRAPHS, GIS DATA, ETC.

SITE SOIL CHARACTERISTICS:

a. Soil types (SCS hydrologic soil classes)
b. Soil infiltration rates (on-site testing)
c. Local groundwater quality concerns (consult RWQCB)
d. Seasonal groundwater level (well data, USGS databases, etc.)
e. Site hydrogeology (from boring logs, lenses, hardpan, etc.)
f. Available system head

SCS Soil Conservation Service
RWQCB Regional Water Quality Control Board
USGS U.S. Geological Survey

Next, attempt to fit the BMP onto the site with proper consideration given to recovery zones, setbacks from structures, hydraulic head, and maintenance access roads and ramps. If the BMP can be successfully located at a particular site, it is considered feasible.

Generally if a BMP cannot be located at a site, it is considered infeasible. Sites requiring extraordinary plumbing to collect and treat runoff (e.g., highway jacking or bridge deck collection systems) are considered infeasible due to their associated costs and need not be considered. As described in the Statewide SWMP, purchasing additional land for detention basins and sand traps is not fiscally feasible. Purchasing additional land to site infiltration basins can be considered because of the high water quality benefits gained through the use of infiltration basins for storm water. Even in this case, however, only the purchase of undeveloped land can be fiscally justified. Where a minor piece of land is needed for placement of an infiltration basin, purchasing low intensity developed land (such as storage yards or parking lots) can be considered. The ultimate fiscal feasibility will be determined by the appropriate funding authority.

5.3 PROJECT SIZING: WATER QUALITY DESIGN STORM DETERMINATION

"Design Storm," as discussed in this section, is the 24-hour rainfall depth used to derive the "water quality volume," or active storage capacity, of storm water treatment devices. Standard Caltrans hydrologic and hydraulic design procedures will be applied in designing

the hydraulic capacity of the treatment device, the inlet and outlet channels and structures, the facilities for conveyance of excess flows (overflows) , etc. Treatment devices are designed for a maximum drainage period of three days.

The water quality volume of treatment BMPs will be sized to provide the greater of:

- The level of protection specified by the appropriate local Regional Water Quality Control Board (RWQCB) in its numeric sizing criteria for treatment BMPs, or
- Sizing criteria specified by local government authorities for numeric sizing of similar storm water treatment BMP facilities.

If no minimum standards have been established by the appropriate RWQCB or local government agency, Caltrans will use a treatment volume that will provide the same frequency of occurrence (five per year on the average) of partially treated outflow inherent in the Los Angeles and San Diego numerical sizing criteria. (These overflows occur when the inflow volume of storm water runoff on a given day is greater than the available storage volume in the device to safety treat all of the inflow.)

Rainfall depths that produce five overflows per year are shown in Figure 5-2 for 64 statewide locations. Table 5-3 (currently incomplete in its coverage of the state) tabulates these 24-hour rainfall depths. Appendix 5.A provides instructions for the district design staff on obtaining the water balance spreadsheet to perform their own calculations using local rainfall data.

For a specific project, if the project engineer wishes to use a water quality volume different from that derived using the methods outlined above, the Regional Water Quality Control Board should be consulted to determine an appropriate design volume. In this case, Caltrans will submit to the Executive Officer of the appropriate RWQCB the proposed design criteria with justification for review and acceptance.

TABLE 5-3: WATER QUALITY DESIGN STORMS THROUGHOUT THE STATE

Caltrans District	C.ID	Rainfall Station	24-hr treatment storm (in)	County
1	1A	EUREKA WFO WOODLEY IS	1.3	HUMBOLDT
1	1B	KLAMATH	2.7	DEL NORTE
1	1C	MAHNKE	2.3	LAKE
1	1D	YORKVILLE	2.4	MENDOCINO
2	2A	ALTURAS	0.4	MODOC
2	2B	ETNA	1.2	SISKIYOU
2	2C	HYAMPOM	1.9	TRINITY
2	2D	MILFORD LAUFMAN RS	0.8	LASSEN
2	2E	MOUNT SHASTA	1.7	SISKIYOU
2	2F	PLUMAS EUREKA STATE PAR	2.9	PLUMAS
2	2G	RED BLUFF AP	1.0	TEHAMA
2	2H	SHASTA DAM	2.6	SHASTA
2	2I	TERMO 1 E	0.4	LASSEN
2	2J	TULELAKE	0.4	SISKIYOU
2	2K	VOLTA POWER HOUSE	1.3	SHASTA
3	3A	BLUE CANYON	2.8	PLACER
3	3B	CHICO UNIVERSITY FARM	1.2	BUTTE
3	3C	DOWNIEVILLE	2.7	SIERRA
3	3D	GRASS VALLEY NO 2	2.2	NEVADA
3	3E	ROBBS PEAK P H	2.3	EL DORADO
3	3F	SACRAMENTO DOWNTOWN	0.9	SACRAMENTO
3	3G	STONY GORGE RESERVOIR	1.0	GLENN
3	3H	TAHOE CITY*	1.6	PLACER
3	3I	WHEATLAND 2 NE	1.0	PLACER
4	4A	NOVATO 8 WNW	1.3	MARIN
4	4B	SAN FRANCISCO DOWNTOWN	1.0	SAN FRANCISCO
4	4C	SAN JOSE	0.7	SANTA CLARA
4	4D	SEBASTOPOL	1.5	SONOMA
4	4E	WALNUT CREEK 2 ENE	1.0	CONTRA COSTA
5	5A	BOULDER CREEK LOCAT RAN	2.9	SANTA CRUZ
5	5B	BRYSON	1.5	MONTEREY
5	5C	SAN BENITO	0.7	SAN BENITO
5	5D	SANTA BARBARA	0.8	SANTA BARBARA
5	5E	SANTA MARIA WSO ARPT	0.8	SANTA BARBARA
6	6A	BAKERSFIELD AP	0.3	KERN
6	6B	BORON	0.3	KERN
6	6C	COALINGA 1 SE	0.4	FRESNO
6	6D	CORCORAN IRRIG DIST	0.4	KINGS
6	6E	FRESNO YOSEMITE INTL	0.6	FRESNO
6	6F	HUNTINGTON LAKE	2.0	FRESNO
6	6G	LOST HILLS	0.4	KERN
6	6H	THREE RIVERS EDISON PH	1.1	TULARE

TABLE 5-3: WATER QUALITY DESIGN STORMS THROUGHOUT THE STATE

7	7A	HANSEN DAM	1.0	LOS ANGELES
7	7B	LOS ANGELES WSO ARPT	0.75	LOS ANGELES
7	7C	SANDBERG	0.4	LOS ANGELES
8	8A	BEAUMONT	1.0	RIVERSIDE
8	8B	CAJON WEST SUMMIT	0.3	SAN BERNARDINO
8	8C	HAYFIELD PUMPING PLANT	0.2	RIVERSIDE
8	8D	IRON MOUNTAIN	0.2	SAN BERNARDINO
8	8E	PARKER RESERVOIR	0.3	SAN BERNARDINO
8	8F	PRADO DAM	0.8	RIVERSIDE
8	8G	VICTORVILLE PUMP PLANT	0.3	SAN BERNARDINO
9	9A	BISHOP AP	0.3	INYO
9	9B	INDEPENDENCE	0.2	INYO
10	10A	FIDDLETOWN DEXTER RANCH	1.6	AMADOR
10	10B	GROVELAND 2	1.7	TUOLUMNE
10	10C	MODESTO 2	0.6	STANISLAUS
10	10D	SAN LUIS DAM	0.6	MERCED
10	10E	WAWONA RANGER STATION	1.9	MARIPOSA
11	11A	CUYAMACA	1.7	SAN DIEGO
11	11B	EL CENTRO 2 SSW	0.1	IMPERIAL
11	11C	PALOMAR MOUNTAIN OBSERV	1.7	SAN DIEGO
11	11D	SAN DIEGO WSO AIRPORT	0.6	SAN DIEGO
12	12A	LAGUNA BEACH 2	0.7	ORANGE

* Current local guidance calls for the 20-year, 1-hour storm depth, or approximately 1 inch.

Pollution Prevention/Good Housekeeping for Municipal Operations

Regulatory Text

You must develop and implement an operation and maintenance program that includes a training component and has the ultimate goal of preventing or reducing pollutant runoff from municipal operations. Using training materials that are available from EPA, your State, Tribe, or other organizations, your program must include employee training to prevent and reduce storm water pollution from activities such as park and open space maintenance, fleet and building maintenance, new construction and land disturbances, and storm water system maintenance.

Guidance

EPA recommends that, at a minimum, you consider the following in developing your program: maintenance activities, maintenance schedules, and long-term inspection procedures for structural and nonstructural storm water controls to reduce floatables and other pollutants discharged from your separate storm sewers; controls for reducing or eliminating the discharge of pollutants from streets, roads, highways, municipal parking lots, maintenance and storage yards, fleet or maintenance shops with outdoor storage areas, salt/sand storage locations and snow disposal areas operated by you, and waste transfer stations; procedures for properly disposing of waste removed from the separate storm sewers and areas listed above (such as dredge spoil, accumulated sediments, floatables, and other debris); and ways to ensure that new flood management projects assess the impacts on water quality and examine existing projects for incorporating additional water quality protection devices or practices. Operation and maintenance should be an integral component of all storm water management programs. This measure is intended to improve the efficiency of these programs and require new programs where necessary. Properly developed and implemented operation and maintenance programs reduce the risk of water quality problems.

BMP Fact Sheets

Source controls

Pet waste collection

Automobile maintenance

Vehicle washing

Illegal dumping control

Landscaping and lawn care

Pest control

Parking lot and street cleaning

Roadway and bridge maintenance

Septic system controls

Storm drain system cleaning

Alternative discharge options for chlorinated water

Materials management

Alternative products

Hazardous materials storage

Road salt application and storage

Spill response and prevention

Used oil recycling

Materials management

Additional Fact Sheets

Airplane Deicing Fluid Recovery System

Catch Basin Cleaning

Coverings

Employee Training

Flow Diversion

Handling and Disposal of Residuals

Environmental Effects from Highway Ice and Snow Removal Operations

Internal Reporting

Materals Inventory

Preventative Maintenance

Record Keeping

Spill Prevention Planning

Storm Water Contamination Assessment

Visual Inspections

Source controls

Pet Waste Collection

Pollution Prevention/Good Housekeeping for Municipal Operations

Description

Animal waste dispensers can increase waste collection by providing an convenient method for disposal

Pet waste collection as a source control involves using a combination of educational outreach and enforcement to encourage residents to clean up after their pets. The presence of pet waste in storm water runoff has a number of implications for urban stream water quality, with perhaps the greatest impact from fecal bacteria. According to recent research, nonhuman waste represents a significant source of bacterial contamination in urban watersheds. Genetic studies by Alderiso et al. (1996) and Trial et al. (1993) both concluded that 95 percent of fecal coliform found in urban storm water were of nonhuman origin. Bacterial source-tracking studies in a watershed in the Seattle, Washington, area also found that nearly 20 percent of the bacteria isolates that could be matched with host animals were matched with dogs. These bacteria can pose health risks to humans and other animals and result in the spread of disease. It has been estimated that for watersheds of up to 20 square miles draining to small coastal bays, 2 or 3 days of droppings from a population of about 100 dogs would contribute enough bacteria and nutrients to temporarily close a bay to swimming and shellfishing (USEPA, 1993).

Pet waste may also be a factor in the eutrophication of lakes. The release of nutrients from the decay of pet waste promotes weed and algae growth, limiting light penetration and the growth of aquatic vegetation. This situation, in turn, can reduce oxygen levels in the water, affecting fish and other aquatic organisms.

Pet waste collection programs use pet awareness and education, signs, and pet waste control ordinances to alert residents to the proper disposal techniques for pet droppings. In some parts of the country, the concept of parks or portions of parks established specifically for urban dog owners has gained in popularity. With provisions for proper disposal of dog feces and siting and design to address storm water runoff, these parks may represent another option for protecting local water quality.

Applicability

Pet ownership is not limited by factors such as region of the country, climate, or topography. For this reason, educational outreach regarding pet waste is appropriate throughout the country. In a survey of Chesapeake Bay residents, it was found that about 40 percent of households own a dog. Just about half of these dog owners actually walked their dog in public areas. Of the half that did walk their dog, about 60 percent claimed to pick up after their dog (Swann, 1999), which is generally consistent with other studies (Table 1). Men were found to be less prone to pick up after their dog than women were (Swann, 1999).

Residents seem to be of two minds when it comes to dog waste. While a strong majority agree that dog waste can be a water quality problem (Hardwick, 1997; Swann, 1999), they generally rank it as the least important local water quality problem (Syferd, 1995 and MSRC, 1997). This finding strongly suggests the need to dramatically improve watershed education efforts to increase public recognition about the water quality and health consequences of dog waste.

Table 1. A comparison of three resident surveys about cleaning up after dogs

Study	Survey Results
Maryland (HGIC, 1996)	• 62% always cleaned up after the dog, 23% sometimes, 15% never • Disposal method: trash can (66%), toilet (12%), other 22%
Washington (Hardwick, 1997)	• Pet ownership: 58% • 51% of dog owners do not walk dogs • 69% claimed that they cleaned up after the dog • 31% do not pick up • Disposal methods: trash can 54%, toilet 20%, compost pile 4% • 4% train pet to poop in own yard • 85% agreed that pet wastes contribute to water quality problems
Chesapeake Bay (Swann, 1999)	• Dog ownership: 41% • 44% of dog owners do not walk dogs • Dog walkers who clean up most/all of the time 59% • Dog walkers who never or rarely cleanup 41% • Of those who never or rarely clean up, 44% would not cleanup even with fine, complaints, or improved sanitary collection or disposal methods • 63% agreed that pet wastes contribute to water quality problems

Design Considerations

Programs to control pet waste typically use "pooper-scooper" ordinances to regulate pet waste cleanup. These ordinances require the removal and proper disposal of pet waste from public areas and other people's property before the dog owner leaves the immediate area. Often a fine is associated with failure to perform this act as a way to encourage compliance. Some ordinances also include a requirement that pet owners remove pet waste from their own property within a prescribed time frame.

Public education programs are another way to encourage pet waste removal. Often pet waste messages are incorporated into a larger non-point source message relaying the effects of pollution on local water quality. Brochures and public service announcements describe proper pet waste disposal techniques and try to create a storm drain-water quality link between pet waste and runoff. Signs in public parks and the provision of receptacles for pet waste will also encourage cleanup.

Another option for pet waste management could be the use of specially designated dog parks where pets are allowed off-leash. These parks typically include signs reminding pet owners to remove waste, as well as other disposal options for pet owners. The following management options have been used in Australian dog parks and could be incorporated for dog parks in the United States (Harlock Jackson et al., 1995):

- *Doggy loos*. These disposal units are installed in the ground and decomposition occurs within the unit. Minimal maintenance is required (no refuse collection).
- *Pooch patch*. A pole is placed in the park surrounded by a light scattering of sand. Owners are encouraged to introduce their dog to the pole on entry to the park. Dogs then return to the patch to defecate and special bins are provided in which owners then place the deposit.
- *The "Long Grass Principle."* Dogs are attracted to long grass for defecating and areas that are mowed less frequently can be provided for feces to disintegrate naturally. A height of around 10 cm (about 4 inches) is appropriate.

The design of these dog parks should be done to mitigate storm water impacts. The use of vegetated buffers, pooper-scooper stations, and the siting of parks out of drainageways, streams, and steep slopes will help control the impacts of dog waste on receiving waters.

Limitations

The reluctance of many residents to handle dog waste is the biggest limitation to controlling pet waste. According to a Chesapeake Bay survey, 44 percent of dog walkers who do not pick up indicated they would still refuse to pick up, even if confronted by complaints from neighbors, threatened with fines, or provided with more sanitary and convenient options for retrieving and disposing of dog waste. Table 2 provides factors that compel residents to pick up after their dog, along with some rationalizations for not doing so.

This strong resistance to handling dog wastes suggests that an alternative message may be necessary. One such example might be to encourage the practice of rudimentary manure management by training dogs to use areas that are not hydraulically connected to the stream or close to a buffer.

Table 2. Dog owners rationale for picking up or not picking up after their dog (Source: HGIC, 1996)

Reasons for not picking it up	Reasons for picking up
• because it eventually goes away • just because • too much work • on edge of my property • it's in my yard • it's in the woods • not prepared • no reason • small dog, small waste • use as fertilizer • sanitary reasons • own a cat or other kind of pet	• it's the law • environmental reasons • hygiene/health reasons • neighborhood courtesy • it should be done • keep the yard clean

Effectiveness

The pollutant removal abilities of pet waste collection programs has never been quantified. There is ample evidence that programs such as these are required in urban areas. For example, in the Four Mile Run watershed in Northern Virginia, a dog population of 11,400 is estimated to contribute about 5,000 pounds of solid waste every day and has been identified as a major contributor of bacteria to the stream. Approximately 500 fecal coliform samples have been taken from Four Mile Run and its tributaries since 1990, and about 50 percent of these samples have exceeded the Virginia State water quality standard for fecal coliform bacteria (NVRC, 2001). A project is currently underway to pinpoint the source of bacterial contamination through DNA fingerprinting.

There is plenty of evidence that pets and urban wildlife can be significant bacterial sources. According to van der Wel (1995) a single gram of dog feces can contain 23 million fecal coliform bacteria. Dogs can also be significant hosts of both *Giardia* and *Salmonella* (Pitt, 1998). A 1982 study of Baltimore, Maryland, catchments reported that dog feces were the single greatest contributor of fecal coliform and fecal strep bacteria (Lim and Olivieri, 1982). This evidence points to a need for enforcement and education to raise resident awareness regarding the water quality impacts of this urban pollutant source.

Cost Considerations

The cost of pet waste collection programs will vary depending on the intensity of the effort and the paths chosen to control pet waste. The most popular way is through an ordinance, but managers must consider the cost of enforcement, including staff and equipment requirements. Public education program costs are determined by the type of materials produced and the method of distribution selected. Signs in parks may initially have a higher cost than printed materials, but can last for many years. Signs may also be more effective because they act as on-site reminders to dog owners to clean up in parks.

References

Alderserio, K., D. Wait, and M. Sobsey. 1996. Detection and characterization of male-specific RNA coliphages in a New York City reservoir to distinguish between human and non-human sources of contamination. In *Proceedings of a Symposium on New York City Water Supply Studies*, ed. McDonnell et al. TPS-96-2. American Water Resources Association. Herndon, VA.

Hardwick, N. 1997. *Lake Sammamish Watershed Water Quality Survey*. King County Water and Land Resources Division, Seattle, WA. 122 pp.

Harlock Jackson PTY. 1995. *Public Open Space and Dogs: a Design and Management Guide for Open Space Professionals and Local Government* . Harlock Jackson. Victoria, Australia.

Home and Garden Information Center (HGIC). 1996. *Residential Fertilizer Use Survey*. University of Maryland Cooperative Extension. College Park, MD. Unpublished surveys.

Lim, S. and V. Olivieri. 1982. *Sources of Microorganisms in Urban Runoff*. John Hopkins School of Public Health and Hygiene. Jones Falls Urban Runoff Project. Baltimore, MD. 140 pp

Minnesota Center for Survey Research (MCSR). 1997. *Lawn Care Survey Results and Technical Report.* Technical Report 97-9. University of Minnesota. Minneapolis, MN. 60 pp

Northen Virginia Regional Commission (NVRC). 2001. *Welcome to NVRC'S Four Mile Run Program.* [http://www.novaregion.org/4MileRun/4mr.htm]. Last updated April 19, 2001. Accessed June 4, 2001.

Pitt, R. 1998. Epidemiology and stormwater management. In *Stormwater Quality Management.* CRC/Lewis Publishers, New York, NY.

Swann, C. 1999. A *survey of residential nutrient behaviors in the Chesapeake Bay*. Widener-Burrows, Inc. Chesapeake Research Consortium. Center for Watershed Protection. Ellicott City, MD. 112 pp.

Syferd, E. 1995. *Water Quality Consortium. Research Summary Report*. Seattle, WA.

Trial, W. et al. 1993. Bacterial source tracking: studies in an urban Seattle watershed. *Puget Sound Notes* 30:1–3.

USEPA. 1993. *Guidance Specifying Management Measures for Sources of Nonpoint Pollution in Coastal Waters*. U.S. Environmental Protection Agency, Office of Water, Washington, DC.

van der Wel, B. 1995. Dog pollution. The Magazine of the Hydrological Society of South Australia 2(1).

Automobile Maintenance

Pollution Prevention/Good Housekeeping for Municipal Operations

Description

Improper disposal of pollutants from automobile maintenance can be prevented by taking used antifreeze to designated waste collection facilities

This pollution prevention measure involves creating a program of targeted outreach and training for businesses and municipal fleets (public works, school buses, fire, police, and parks) involved in automobile maintenance about practices that control pollutants and reduce storm water impacts. Automotive maintenance facilities are considered to be storm water "hot spots" where significant loads of hydrocarbons, trace metals, and other pollutants can be produced that can affect the quality of storm water runoff. Some of the waste types generated at automobile maintenance facilities and at homes of residents performing their own car maintenance include the following:

- Solvents (paints and paint thinners)
- Antifreeze
- Brake fluid and brake lining
- Batteries
- Motor oils
- Fuels (gasoline, diesel, kerosene)
- Lubricating grease.

Estimates show that each year over 180 million gallons of used oil is disposed of improperly (Alameda CCWP, 1992) and that a single quart of motor oil can pollute 250,000 gallons of drinking water (DNREC, 1994). For this reason, automotive maintenance facilities' discharges to storm and sanitary sewer systems are highly regulated. Fluid spills and improper disposal of materials result in pollutants, heavy metals, and toxic materials entering ground and surface water supplies, creating public health and environmental risks. Alteration of practices involving the cleanup and storage of automotive fluids and cleaning of vehicle parts can help reduce the influence of automotive maintenance practices on storm water runoff and local water supplies.

Applicability

The automotive repair industry is the leader in number of generators and amount of total waste produced for small quantity generators of hazardous waste in the United States (USEPA, 1985). Common activities at maintenance shops that generate this waste include the cleaning of parts, changing of vehicle fluids, and replacement and repair of equipment. These activities are also performed by residents at home in their driveway in the course of normal vehicle care. Since the use of automobiles is not limited by geographic or climatic conditions, maintenance facilities are present nationwide and the concerns involving waste created during vehicle repair are similar across the country. In ultra-urban areas, the impacts of automotive maintenance practices are more pronounced due to the greater concentrations of vehicles and higher levels of impervious surface.

Design Considerations

The most effective way to minimize the impacts of automotive maintenance generated waste is by preventing its production. Pollution prevention programs seeking to reduce liquid discharges to sewer and storm drains from automotive maintenance should stress techniques that allow facilities to run a dry shop. Among the suggestions for creating a dry operation are the following:

- Spills should be cleaned up immediately, and water should not be used for clean up whenever possible.
- Floor drains that are connected to the sanitary sewer should be sealed off.
- A solvent service might be hired to supply parts and cleaning materials, and to collect the spent solvent.

Those facilities that are not able to eliminate discharges to the sanitary sewer system may be required to treat their wastewater prior to release from the site. There are several methods for preventing untreated wastewater from entering storm water runoff. Some municipalities require the use of structural treatment devices to pretreat wastes before they are discharged for treatment at sewage treatment plants. These devices prevent oils and grease from entering the sewer system, often by separating the oil and solids from the water through settling or filtration.

Other methods are also available to help prevent or reduce the discharge of pollutants from vehicle maintenance. Table 1 lists some of the common suggestions found regarding practices that can reduce vehicle maintenance and repair impacts. Many of these practices apply both to business owners and to residents who maintain their own vehicles. Additionally, these practices also apply to maintaining municipal fleets, including school buses, public works, fire, police, parks, and other types of municipal fleets. This list is not comprehensive, and many other suggestions for reducing impacts are available to those responsible for managing storm water runoff from maintenance facilities.

Table 1. Recommendations for reducing the storm water impacts of automotive maintenance

Pollution Prevention Method	Suggested Activities
Waste Reduction	• The number of solvents used should be kept to a minimum to make recycling easier and to reduce hazardous waste management cost. • Do all liquid cleaning at a centralized station to ensure that solvents and residues stay in one area. • Locate drip pans and draining boards to direct solvents back into solvent sink or holding tank for reuse.
Using Safer Alternatives	• Use non-hazardous cleaners when possible. • Replace chlorinated organic solvents with nonchlorinated ones like kerosene or mineral spirits. • Recycled products such as engines, oil, transmission fluid, antifreeze, and hydraulic fluid can be purchased to support the market of recycled products.
Spill Clean Up	• Use as little water as possible to clean spills leaks, and drips. • Rags should be used to clean small spills, dry absorbent material for larger spills, and a mop for general cleanup. Mop water can be disposed of via the sink or toilet to the sanitary sewer.
Good Housekeeping	• Employee training and public outreach are necessary to reinforce proper disposal practices. • Conduct maintenance work such as fluid changes indoors. • Update facility schematics to accurately reflect all plumbing connections. • Parked vehicles should be monitored closely for leaks and pans placed under any leaks to collect the fluids for proper disposal or recycling. • Promptly transfer used fluids to recycling drums or hazardous waste containers. • Do not pour liquid waste down floor drains, sinks, or outdoor storm drain inlets. • Obtain and use drain mats to cover drains in the event of a spill. • Store cracked batteries in leakproof secondary containers.
Parts Cleaning	• Use detergent-based or water-based cleaning systems instead of organic solvent degreasers. • Steam cleaning and pressure washing may be used instead of solvent parts cleaning. The wastewater generated from steam cleaning can be discharged to the on-site oil/water separator.

Limitations

There are a number of limitations to implementing recommendations for automotive maintenance facilities. Space and time constraints may make performing work indoors unfeasible. Containment of spills from vehicles brought on-site after working hours may not be possible. Proper disposal education for employees must continually be updated. Installation of structural BMPs for pretreatment of wastewater discharges can be expensive. Prices for recycled materials and fluids may be higher than those of non-recycled materials. Some facilities can be limited by a lack of providers of recycled materials and by the absence of businesses to provide services such as hazardous waste removal, structural BMP maintenance, or solvent recycling equipment.

Maintenance Considerations

For facilities responsible for pretreating their wastewater prior to discharging, the proper functioning of structural BMPs is an important maintenance consideration. Routine cleanout of oil and grease is required for the devices to maintain their effectiveness, usually at least once a month. During periods of heavy rainfall, cleanout is required more often to ensure that pollutants are not washed through the trap. Sediment removal is also required on a regular basis to keep the device working efficiently.

Effectiveness

The effectiveness of automotive maintenance best management practices at removing pollutants is difficult to quantify. However, there are studies that demonstrate the effect pollution prevention practices can have in reducing impacts from automotive fluids. A 1994 study of auto recycling facilities demonstrates the effect that using best management practices can have on reducing storm water toxicity and pollutant loads. Through the use of structural and nonstructural BMPs, the study facility was able to reduce concentrations of lead, oil, and grease to levels approaching USEPA benchmarks.

A program that has had great success in controlling contaminated flows from vehicle maintenance facilities is the Clean Bay Business Program in Palo Alto, California. In exchange for allowing inspectors to visit a facility once a year and implementing recommended management practices, the facility is designated as a Clean Bay Business. This entitles the facility to promotional tools like listings twice a year in full-page newspaper ads, decals for shop windows, and other Clean Bay Business materials. Other promotions involving prize drawings and discount coupon giveaways help generate business for the facilities in the program. The effectiveness of the program at creating behavioral changes is evident in the increase in the number of facilities that have received the Clean Bay Business designation. In 1992 when the program began, only 4 percent of businesses used all of the recommended management practices. By 1998, 94 percent of businesses had instituted the practices suggested (NRDC, 1999).

The effectiveness of those programs aimed at altering behaviors detrimental to storm water is impressive. After participation in the program, the changes facilities made had the following impacts:

- 78 direct discharges to storm drains were eliminated by ceasing or modifying the practices used for activities such as parking lot cleaning, vehicle washing, and wet sanding.
- Violations of storm drain protection requirements fell by 90 percent from 1992 through 1995.
- The number of shops conducting outdoor removal of vehicle fluids without secondary containment fell from 43 to 4.

Cost Considerations

The initial per-facility cost for the program was approximately $300, with a cost of $150 for each subsequent year. This cost includes inspector visits and follow-up work, outreach materials, mailing lists, and database management. The program has been expanded to include auto parts stores and outreach to local high schools and adult education repair classes.

References

Camp Dresser & McKee et al. 1993. *California Storm Water Industrial/Commercial Best Management Practice Handbook.* Stormwater Quality Task Force, Sacramento, CA.

Alameda Countywide Clean Water Program. 1992. *Keeping it all in tune: Car repair and pollution prevention.* Alameda Countywide Clean Water Program, Hayward, CA.

Natural Resources Defense Council. 1999. *Stormwater Strategies: Community Responses to Runoff Pollution.* Natural Resources Defense Council, Inc, New York, NY.

USEPA. 1991. *Guides to Pollution Prevention: The Automotive Repair Industry.* U.S. Environmental Protection Agency, Office of Research and Development, Cincinnati, OH.

Santa Clara Valley Nonpoint Source Pollution Control Program. 1992. *Best Management Practices for Automotive-Related Industries: Practices for Sanitary Sewer Discharges and Storm Water Pollution Control.* Santa Clara Valley Nonpoint Source Pollution Control Program, San Jose, CA.

USEPA. July 1992. *Storm Water Management for Industrial Activities: Developing Pollution Prevention Plans and Best Management Practices.* United States Environmental Protection Agency, Office of Wastewater Compliance, Washington, DC.

Center for Watershed Protection. 1995. Auto Recyclers-Onsite BMPs Mitigate Urban Runoff Hotspots. *Watershed Protection Techniques*, Vol 1, No. 4.

Vehicle Washing

Pollution Prevention/Good Housekeeping for Municipal Operations

Description

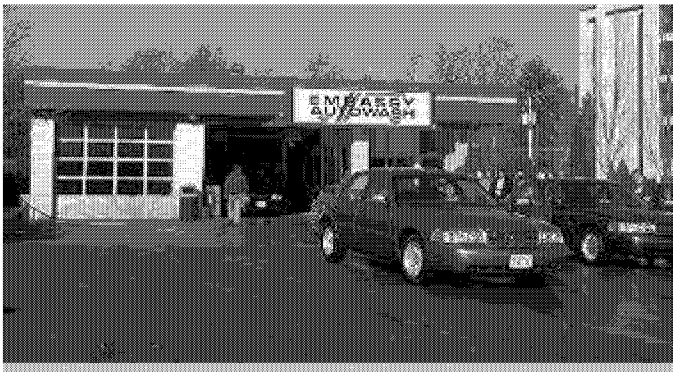

Using commercial car wash facilities can reduce storm water impacts caused by car washing because such facilities must treat their wash water discharges before release

This management measure involves educating the general public, businesses, and municipal fleets (public works, school buses, fire, police, and parks) on the water quality impacts of the outdoor washing of automobiles and how to avoid allowing polluted runoff to enter the storm drain system. Outdoor car washing has the potential to result in a high loads of nutrients, metals, and hydrocarbons during dry weather conditions in many watersheds, as the detergent-rich water used to wash the grime off our cars flows down the street and into the storm drain. Commercial car wash facilities often recycle their water or are required to treat their wash water discharge prior to release to the sanitary sewer system, so most storm water impacts from car washing are from residents, businesses, and charity car wash fundraisers that discharge polluted wash water to the storm drain system. According to the surveys, 55 to 70 percent of households wash their own cars, with the remainder going to a commercial car wash. Sixty percent of residents could be classified as "chronic car-washers" who wash their cars at least once a month (Smith, 1996, and Hardwick, 1997). Between 70 and 90 percent of residents reported that their car wash water drained directly to the street and, presumably, to the nearest stream. It has been estimated that 25 percent of the population of the United States may be classified as chronic car washers, which translates into about 27 million potential residential car wash polluters (Center for Watershed Protection, 1999).

Applicability

Car washing is a common routine for residents and a popular way for organizations such as scout troops, schools, and sports teams to raise funds. This activity is not limited by geographic region, but its impact on water quality is greatest in more urbanized areas with higher concentrations of automobiles. Currently, only a few pollution prevention programs incorporate proper car washing practices as part of an overall message to residents on ways to reduce nonpoint source pollution. Other programs have extended this message to include charity car washes and provide these charity groups with equipment and training to alleviate the problems associated with polluted wash water entering the storm drain system.

Implementation

The development of a prevention program to reduce the impact of car wash runoff includes outreach on management practices to reduce discharges to storm drains. Some of these management practices include the following:

- Using a commercial car wash.
- Washing cars on gravel, grass, or other permeable surfaces.
- Blocking off the storm drain during charity carwash events or using a insert to catch wash water.
- Pumping soapy water from car washes into a sanitary sewer drain.
- If pumping into a drain is not feasible, pumping car wash water onto grass or landscaping to provide filtration.
- Using hoses with nozzles that automatically turn off when left unattended.
- Using only biodegradable soaps.

Storm drain stenciling programs (see the Storm Drain Stenciling fact sheet) emphasizing the connection between the storm drain system and runoff can also help reinforce the idea that car washing activities can affect local water quality.

In the Pacific Northwest, outreach programs provide materials to charity carwash organizers to prevent car wash water from entering storm drains. These "water friendly "carwash kits are provided free of charge to charity organizers, along with training and educational videos on planning an environmentally friendly carwash. Two types of equipment are available for charity organizations to borrow: a catch-basin insert with a sump pump, or a vacuum/boom device known as a Bubble Buster (Kitsap County, 1999). Both devices capture wash water runoff, allowing it to be pumped to either a sanitary sewer or a vegetated area for treatment.

For businesses, good housekeeping practices can minimize the risk of contamination from wash water discharges. The following are some general best management practices that those businesses with their own vehicle washing facilities can incorporate to control the water quality impacts of wash water discharges:

- All vehicle washing should be done in areas designed to collect and hold the wash and rinse water or effluent generated. Wash water effluent should be recycled, collected, or treated prior to discharge to the sanitary sewer system.
- Pressure cleaning and steam cleaning should be done off-site to avoid generating runoff with high pollutant concentrations. If done on-site, no pressure cleaning and steam cleaning should be done in areas designated as wellhead protection areas for public water supply.
- On-site storm drain locations should be mapped to avoid discharges to the storm drain system.
- Spills should be immediately contained and treated.

Limitations

The biggest limitation to implementing residential car wash best management practices may be the lack of knowledge regarding the impacts of polluted runoff. Many people do not associate the effects of their vehicle washing activities with local water quality and may be unaware that the discharges that enter storm drains are not treated at plants before being discharged into local waters. Surveys indicate that the average citizen does not fully understand the hydrologic connection between their yard, the street, the storm sewer, and the streams. For example, a recent Roper survey found that just 22 percent of Americans know that storm water runoff is the most common source of pollution of streams, rivers, and oceans (NEETF, 1999).

Most car washing best management practices are inexpensive and rely more on good housekeeping practices than on expensive technology. However, the construction of a specialized area for vehicle washing can be expensive for businesses. Also, for facilities that cannot recycle their wash water, the cost of pretreating wash water, through either structural practices or planning for collection and hauling of contaminated water to sewage treatment plants, can represent a cost limitation.

Effectiveness

The effectiveness of car washing management practices at reducing nonpoint source pollutant loads has yet to be measured accurately. Due to the diffuse nature of nonpoint source pollution, it is often difficult to determine the exact impact of a particular pollution prevention measure at reducing pollutant loading. While not much is known about the water quality of car wash water, it is clear that car washing is a common watershed behavior. Three recent surveys have asked residents where and how frequently they wash their cars (Table 2).

Table 2. A comparison of three surveys about car washing.

Study	Car Washing Behavior
Smith, 1996 Maryland	60% washed car more than once a month
Pellegrin, 1998 California	73% washed their own cars 73% report that wash-water drains to pavement
Hardwick, 1997 Washington	56% washed their own cars 44% used a commercial car wash 91% report that wash-water drains to pavement 56% washed car more than once a month 50% would shift if given discounts or free commercial car washes

Residents are typically not aware of the water quality consequences of car washing and do not understand the chemical content of the soaps and detergents they use. Car washing is a very difficult watershed behavior to change since it is often hard to define a better alternative. However, as with all pollution prevention measures, the reduction of pollutant loads from outdoor car washing activities are bound to have a positive effect on storm water quality.

Cost Considerations

Staffing and materials represent the largest expenditure for local governments seeking to administer a nonpoint source education program. Car wash outreach programs are relatively inexpensive to staff and often require only a limited outlay for materials (brochures, training videos, etc.), and staff time devoted specifically to car wash education can be less than 5 percent of an employee's time. For Kitsap County, Washington, the Sound Car Wash program requires roughly 10 to 15 hours a week of staff time over a 25-week period from April to September. Cost for materials and equipment replacement is estimated to be between $1,500 and $3,000 for the same 25-week period (Kitsap County, 1999). The Clean Bay Car Wash kits program in Tacoma, Washington, uses only the catch basin insert option and estimates that it spends no more than $2,000 per year and less than 2 weeks of staff time per year to handle requests for its program (Tacoma Stormwater Utility, 1999).

The purchase of wash water containment equipment is often a one-time expense, and this equipment is often used for a number of years. Two pieces of equipment used in car wash programs developed in the Pacific Northwest provide an example of the potential equipment cost. For the catch-basin insert, the approximate cost of installation is $65. In some cases, locations where charity car washes are frequently held have constructed their own catch basin inserts using plywood. For the Bubble Buster, the cost ranges from $2,000 to $2,500.

References

Center for Watershed Protection. 1999. On Watershed Behavior. *Watershed Protection Techniques* 3(3): 671-679.

Camp Dresser & McKee et al. 1993. *California Storm Water Industrial/Commercial Best Management Practice Handbook*. Stormwater Quality Task Force, Sacramento, CA.

City of Tacoma Stormwater Utility. 1999. Personal Communication. Tacoma, WA.

Hardwick, N. 1997. *Lake Sammamish watershed water quality survey*. King County Water and Land Resources Division, Seattle, WA. 122 pp.

Kitsap County Sound Car Wash Program. 1999. Personal communication and web site. Kitsap County Government, Port Orchard, WA. [http://www.wa.gov/kitsap/departments/pubworks/carwash.html].

Lance Winslow III. 1999. *How to Run a Successful Car Wash Fundraiser*. Car Wash Guys International, Inc, Tempe, AZ.

Natural Resources Defense Council. 1999. *Stormwater Strategies: Community Responses to Runoff Pollution*. Natural Resources Defense Council, Inc, New York, NY

Smith, J. 1996. Public survey used to estimate pollutant loads in Maryland. Technical Note 73. *Watershed Protection Techniques* 2(2): 361–363.

Pellegrin Research Group. 1998. *Stormwater/urban runoff public education program*. Interim evaluation. Resident population. Los Angeles County Department of Public Works, Los Angeles, CA.

Illegal Dumping Control

Pollution Prevention/Good Housekeeping for Municipal Operations

Description

Illegal dumping control as a management practice involves using public education to familiarize residents and businesses with how illegal dumping can affect storm water. By locating and correcting illegal dumping practices through education and enforcement measures, the many risks to public safety and water quality associated with illegal disposal actions can be prevented. For storm water managers, illegal dumping control is important to preventing contaminated runoff from entering wells and surface water, as well as averting flooding due to blockages of drainage channels for runoff.

Signs can be used to discourage dumping in sensitive areas (Source: NCDENR, 2000)

Several types of illegal dumping can occur. The first is the illegal dumping (also known as "open dumping," "fly dumping," or "midnight dumping") of litter that occurs at abandoned industrial, commercial, or residential buildings, vacant lots, and poorly lit areas such as rural roads and railway lines. This dumping primarily happens to avoid disposal fees or the time and effort required for proper disposal at landfills or recycling facilities. A second type of illegal dumping involves disposal of water that has been exposed to industrial activities and then released to the storm drainage system, introducing pollutants into storm water runoff.

Applicability

Illegal dumping can occur in both urban and rural settings and can happen in all geographic regions. The effects of illegal dumping may be more pronounced in areas with heavier rainfall, due to the greater volume of runoff. In more urbanized areas, illegal dumping may occur due to inaccessibility of recycling or solid waste disposal centers, which are often located on the suburban-rural fringe.

Design Considerations

Illegal dumping control programs focus on community involvement and targeted enforcement to eliminate or reduce illegal dumping practices. The key to successfully using this BMP is increasing public awareness of the problem and its implications. Illegal dumping control programs use a combination of public education, citizen participation, site maintenance, and authorized enforcement measures to address illegal waste disposal. Some of the issues that need to be examined when creating a program include the following:

- The locations of persistent illegal dumping activity
- Types of waste dumped and the profile of dumpers
- Possible driving forces behind illegal dumping, such as excessive user fees, restrictive curbside trash pickup, or ineffective recycling programs

- Previous education and cleanup efforts
- Current control programs and local laws or ordinances addressing the problem
- Sources of funding and additional resources that may be required.

Effective illegal dumping control programs use practices that educate and involve the community, local industries, and elected officials in an effort to eliminate the illegal discarding of wastes. An EPA toolkit for preventing illegal dumping focuses on four programmatic areas (USEPA 1998):

1. Cleanup efforts

Cleanup projects will require a coordinated planning effort to ensure that adequate resources and funding are available. Once a site has been cleaned, signs, lighting, or barriers may be required to discourage future dumping. Signs should indicate the fines and penalties for illegal dumping, and a phone number for reporting incidents. Landscaping and beautification efforts might also discourage future dumping, as well as providing open space and increasing property values.

2. Community Outreach and Involvement

This might be the most important tool in ensuring that this best management practice is effective. The organization of special cleanup events where communities are provided with the resources to properly dispose of illegally dumped materials increases the understanding among residents of illegal dumping impacts and supplies opportunities to correctly dispose of materials which may otherwise be illegally dumped. Integration of illegal dumping prevention into community policing programs or use of programs such as Crimestoppers may also be an effective way to increase enforcement opportunities without the additional cost of hiring new staff. Producing simple messages relating the cost of illegal dumping on local taxes, and directions to proper disposal sites will aid in eliminating the problem. Having a hotline where citizens can report illegal activities and educating the public on the connection between the storm drain and water quality will decrease disposal of waste into storm drain inlets.

3. Targeted Enforcement

This tool involves the use of ordinances to regulate waste management and eliminate illegal dumping through methods such as fines, cost recovery penalties for cleanup, and permit requirements for waste management activities. These fines and penalties can be used to help fund the prevention program or to provide rewards to citizens who report illegal dumping activities. Other recommendations for this tool include training of staff from all municipal departments in recognizing and reporting illegal dumping incidents, and dedicating staff who have the authority to conduct surveillance and inspections and write citations for those caught illegally dumping.

4. Tracking and Evaluation

This tool measures the impact of prevention efforts and determines if goals are being met. Using mapping techniques and computer databases allows officials to identify areas where dumping most often occurs, record patterns of dumping occurrence (time of day, day of week, etc.), and calculate the number of citations issued to the responsible parties. This allows for better allocation of resources and more specific targeting of outreach and education efforts for offenders.

Limitations

Illegal dumping is often spurred by cost and convenience considerations, and a number of factors encourage this practice. The cost of fees for dumping at a proper waste disposal facility are often more than the fine for an illegal dumping offense, thereby discouraging people from complying with the law. The absence of routine or affordable pickup service for trash and recyclables in some communities also encourages illegal dumping. A lack of understanding regarding applicable laws or the inadequacy of existing laws may also contribute to the problem.

Municipalities can coordinate with state and federal agencies to help enforce illegal dumping control measures when resources such as funding and staff for enforcement activities are scarse.

Effectiveness

While the effectiveness of illegal dumping control measures at removing pollutant loads to local waters is hard to quantify, there are numbers to demonstrate the preventative effects these programs have in keeping waste from illegal dump sites and ultimately from storm water runoff. Some examples follow:

- The City/County of Spokane, Washington, Litter Control program is responsible for removing indiscriminate dumping on publicly owned properties and road right-of-ways. The program is estimated to remove 350 tons of illegally dumped material each year.
- Project HALT in Phoenix, Arizona, cleaned up a reported 15,000 tons of waste in 1996 and 1997 and issued more than 165 citations.
- The "Tire Roundup" program sponsored by the Southwest Detroit Environmental Visions community organization pays local residents to bring in illegally dumped tires. In 1995, residents were paid 25 cents per tire, and more than 8,000 tires were collected.

Illegal dumping of household and commercial waste has a variety of impacts on water quality. Hazardous chemicals generated from household, commercial, and industrial sources can contaminate ground and surface water supplies, affecting drinking water and public health as well as aquatic habitat. Reduced drainage of runoff due to blockage of streams, culverts and drainage basins can result in flooding and channel modification. Open burning associated with some illegal sites can cause forest fires that create severe erosion and cause sediment loading in streams. Economically, property values decrease as a result of illegal dumping and affect the local tax base and the ability to maintain pollution prevention programs.

Cost Considerations

The cost of illegal dumping control program activities can vary due to economic and social factors, but with creative thinking potential costs may be reduced. Possible sources of labor for dumping site cleanups can include community and youth groups, county or state corrections programs, or corporations. Equipment for cleanup may be available through either public works or transportation agencies or through donations by private companies. Training municipal staff to report incidents of illegal dumping witnessed during the performance of other duties reduces the need for full-time staff for the program.

References

Camp Dresser & McKee et al. 1993. *California Storm Water Municipal Best Management Practice Handbook.* Blue Print Service, Oakland, CA.

City of Spokane. 1999. *Waste to Energy Plant-Litter Control/Indiscriminate Dumping*. Spokane, WA. [http://www.spokanesolidwaste.org/wtelittr.htm].

National Center for Environmental Decision Making Research. 1997. *Decision Makers Guide to Controlling Litter and Illegal Dumping*. NCEDR, Knoxville, TN.

NCDENR. 2000. *Illegal Dumping in North Carolina*. North Carolina Department of Environment and Natural Resources. Raleigh, NC. [http://wastenot.ehnr.state.nc.us/swhome/illdump.htm]. Last updated January 12, 2000. Accessed January 2001.

USEPA. 1998. *Illegal Dumping Prevention Guidebook.* U.S. Environmental Protection Agency Region 5, Waste, Pesticides, and Toxics Division, Chicago, IL.

Landscaping and Lawn Care

Pollution Prevention/Good Housekeeping for Municipal Operations

Description

Applying too much lawn fertilizer can significantly contribute to water quality problems

This management measure seeks to control the storm water impacts of landscaping and lawn care practices through education and outreach on methods that reduce nutrient loadings and the amount of storm water runoff generated from lawns. Research has indicated that nutrient runoff from lawns has the potential to cause eutrophication in streams, lakes, and estuaries (CWP, 1999a, and Schueler, 1995a). Nutrient loads generated by suburban lawns as well as municipal properties can be significant, and recent research has shown that lawns produce more surface runoff than previously thought (CWP, 1999b). Pesticide runoff (see Pest Control fact sheet) can contribute pollutants that contaminate drinking water supplies and are toxic to both humans and aquatic organisms.

Landscaping, lawn care, and grounds maintenance are a big business in the United States. It has been estimated that there are 25 to 30 million acres of turf and lawn in the United States (Robert and Roberts, 1989, Lawn and Landscape Institute, 1999). If lawns were classified as a crop, they would rank as the fifth largest in the country on the basis of area, after corn, soybeans, wheat, and hay (USDA, 1992). In terms of fertilizer inputs, nutrients are applied to lawns at about the same application rates as those used for row crops (Barth, 1995a). The urban lawn is also estimated to receive an annual input of 5 to 7 pounds of pesticides per acre (Schueler, 1995b).

Not many residents understand that lawn fertilizer can cause water quality problems overall, less than one-fourth of residents rated it as a water quality concern (Syferd, 1995 and Assing, 1994), although ratings were as high as 60 percent for residents who lived adjacent to lakes (Morris and Traxler, 1996, and MCSR, 1997). Interestingly, in one Minnesota survey, only 21 percent of homeowners felt their own lawn contributed to water quality problems, while over twice as many felt that their neighbors' lawns did (MCSR, 1997). Unlike farmers, suburban and rural landowners are often ignorant of the actual nutrient needs of their lawns. According to surveys, only 10 to 20 percent of lawn owners take the trouble to take soil tests to determine whether fertilization is even needed (CWP, 1999). The majority of lawn owners are not aware of the phosphorus or nitrogen content of the fertilizer they apply (Morris and Traxler, 1996) or that mulching grass clippings into lawns can reduce or eliminate the need to fertilize. Informing residents, municipalities, and lawn care professionals on methods to reduce fertilizer and pesticide application, limit water use, and avoid land disturbance can help alleviate the potential impacts of a major contributor of nonpoint source pollution in residential communities.

Applicability

Lawn care, landscaping, and grounds maintenance are done in all parts of the country, in all types of climates, and in every type of community from rural to urban. Lawn fertilization is one of the most widespread watershed practices conducted by homeowners. In a survey of resident attitudes in the Chesapeake Bay, 89 percent of residents owned a yard, and of these, about 50 percent applied fertilizer every year (Swann, 1999). The average rate of fertilization in 10 other resident surveys was even higher, at 78 percent, although this could reflect the fact that these surveys were biased toward predominantly suburban neighborhoods, or excluded non-lawn owners. Because lawn care, landscaping, and grounds maintenance are such common practices, education programs for both residents, municipalities, and lawn care professionals on reducing the storm water impacts of these practices are an excellent way to improve local water quality.

Design Considerations

Designers of education programs that seek to change the impacts of fertilizer, pesticide, and herbicide use on receiving water quality should first consider creating training programs for those involved in the lawn care industry. Nationally, lawn care companies are used by 7 to 50 percent of consumers, depending on household income and lot size. Lawn care companies can exercise considerable authority over which practices are applied to the lawns they tend, as long as they still produce an attractive lawn. For example, 94 percent of lawn care companies reported that they had authority to change practices, and that about 60 percent of their customers were "somewhat receptive to new ideas", according to a Florida study (Israel et al., 1995). De Young (1997) also found that suburban Michigan residents expressed a high level of trust in their lawn care company.

Local governments that want to influence lawn care companies must have an active program that supports those companies that employ techniques to limit fertilizer and pesticide use to the minimum necessary to maintain a green lawn. One way to do this is through providing promotional opportunities. One example is the state of Virginia Water Quality Improvement program that includes the chance for lawn care professionals to enter into an agreement to use more environmentally friendly lawn care practices. In exchange, the lawn care company can use their participation in the program as a promotional tool (VA DCR, 1999). Providing certification for representatives from lawn care companies for attending training workshops put on by cooperative extension offices can also be an effective promotional tool.

Training for employees of lawn and garden centers is another important tool in spreading the message regarding lawn care and pollution control. Many studies indicate that product labels and store attendants are the primary and almost exclusive source of lawn care information for the average consumer who takes care of their own lawn. The Florida Yards and Neighbors program has worked with 19 stores of a large national hardware and garden chain to educate store employees and incorporate messages regarding fertilizer use and pesticide reduction (NRDC, 1999). Often the key strategy to implementing a program like this is to substitute watershed-friendly products for those that are not, and to offer training for the store attendants at the point of sale on how to use and, perhaps more importantly, how not to abuse or overuse such products.

A recent Center for Watershed Protection (CWP) survey of 50 nutrient education programs provides a number of tips to program managers on making outreach programs more effective. The results of the study showed that there were a number of important considerations for increasing the recall and implementation of pollution prevention messages. Table 1 provides some tips that appear to work the best at relaying pollution prevention messages and changing pollution-producing behaviors.

Table 1. Tips for creating more effective resident lawn care outreach programs

Tip 1: *Develop a stronger connection between the yard, the street, the storm, and the stream.*	Outreach techniques should continually stress the link between lawn care and the undesirable water quality it helps to create (e.g., algae blooms and sedimentation).
Tip 2: *Form regional media campaigns.*	Since most communities operate on small budgets, they should consider pooling their resources to develop regional media campaigns that can use the outreach techniques that are proven to reach and influence residents. In particular, regional campaigns allow communities to hire the professionals needed to create and deliver a strong message through the media. Also, the campaign approach allows a community to employ a combination of media, such as radio, television, and print, to reach a wider segment of the population. It is important to keep in mind that since no single outreach technique will be recalled by more than 30 percent of the population at large, several different outreach techniques will be needed in an effective media campaign.
Tip 3: *Use television wisely.*	Television is the most influential medium for influencing the public, but careful choices need to be made on the form of television that is used. The CWP survey found that community cable access channels are much less effective than commercial or public television channels. Program managers should consider using cable network channels targeted for specific audiences, and develop thematic shows that capture interest of the home, garden and lawn crowd (e.g., shows along the lines of "Gardening by the Yard"). Well-produced public service announcements on commercial television are also a sensible investment.

Table 1. Tips for creating more effective resident lawn care outreach programs (Continued)

Tip 4: *Keep messages simple and funny.*	Watershed education should not be preachy, complex, or depressing. Indeed, the most effective outreach techniques combine a simple and direct message with a dash of humor.
Tip 5: *Make information packets small, slick, and durable.*	Educators continually struggle about how to impart the detailed information to residents on how to really practice good lawn care behaviors, without losing their interest. One should avoid creating a ponderous and boring handbook. One solution is to create small, colorful and durable packets that contain the key essentials about lawn care behaviors, and direct contact information to get better advice. These packets can be stuck on the refrigerator, the kitchen drawer or the workbench for handy reference when the impulse for better lawn care behavior strikes.
Tip 6: *Understand the demographics of your watershed.*	Knowing the unique demographics of a watershed allows a program manager to determine what outreach techniques are likely to work for that particular area. For example, if some residents speak English as a second language, a certain percentage of outreach materials should be produced in their native language. Similarly, watershed managers should consider more direct channels to send watershed messages to reach particular groups, such as through church leaders or ethnic-specific newspapers and television channels.

Pollution prevention programs may also wish to incorporate a much stronger message that promotes a low- or zero-input lawn. Watershed education programs might strongly advocate no chemical fertilization, reduced turf area, and the use of native plants adapted to the ecoregion (Barth, 1995b). This message provides a balance to the pro-fertilization message that is marketed by the lawn care industry.

Program managers need to incorporate some method for evaluating the effectiveness of their programs at reaching residents. Many programs use "before and after" market surveys to provide information on the level of understanding of residents and the percentage of residents that implement good lawn care practices. These surveys provide insights on what outreach techniques work best for a community and the level of behavior change that can be expected.

Alternative landscaping techniques such as naturescaping and xeriscaping can also be used. *Xeriscaping* is considered to be a viable alternative to the high water requirements of typical landscaping. It is a form of landscaping that conserves water and protects the environment. Xeriscaping does not result in landscaping with cactus and rock gardens. Rather, cool, green landscapes can be used when they are maintained with water-efficient practices. The main benefit of xeriscaping is that it reduces water use (TAMU, 1996). Xeriscaping incorporates seven basic principles that reduce water use (NYDEP, 1997):

- *Planning and design*. Consider drainage, light, and soil conditions; desired maintenance level; which existing plants will remain; plant and color preferences; and budget.

- *Soil improvement.* Mix peat moss or compost into soil before planting to help the soil retain water. Use terraces and retaining walls to reduce water run-off from sloped yards.
- *Appropriate plant selection.* Choose low-water-using flowers, trees, shrubs, and groundcovers. Many of these plants need watering only in the first year.
- *Practical lawns.* Limit the amount of grass area. Plant groundcovers or add hard surface areas like decks, patios, or walkways. If replanting lawns, use drought-tolerant grass seed mixes.
- *Efficient irrigation.* Install drip or trickle irrigation systems, as they use water efficiently.
- *Effective use of mulches.* Use a 3-inch deep layer of mulches such as pine needles or shredded leaves or bark. This keeps soil moist, prevents erosion, and smothers weeds.
- *Appropriate maintenance.* Properly timed fertilizing, weeding, pest control, and pruning will preserve the beauty of the landscape and its water efficiency.

Naturescaping is a way of putting native plants and beneficial wildlife habitat back into your yard or community. It is also a beautiful way to conserve water and energy, reduce pollution of water and soil, and create habitat for wildlife. Native plants are the foundation of naturescaping. The plants that evolved in your region are well adapted to our climate and naturally resistant to local pests and diseases. Once established, natives can often survive on rainwater alone. Naturescaping areas can include replacing some lawn area with a wildflower meadow; hummingbird and butterfly garden, plants and trees selected for seeds, fruit, and nectar; and nesting boxes.

When creating a naturescape, it is important to include four elements: food, water, shelter, and adequate space. When creating a naturescape in your yard or community, keep in mind these steps:

- Visit "wild" places and naturescaped sites and imagine how these landscapes would fit in your yard or community.
- Educate yourself and your community. Learn about native plants and basic design and care concepts. You can attend workshops and read plant and design books.
- When you are ready to develop a site plan, choose a small viewable site. When planning, consider maintenance water, gardening, access to feeders. Know the existing conditions of the area shade/sun, wet/dry, wind patterns, drainage, existing plants and critters. Once you develop a plan and you have gotten any necessary permits, you are ready to gather your material and begin.

A local government can meet with local neighborhood and creek groups to promote community naturescaping, host naturescaping workshops, and establish naturescaping demonstration sites in neighborhoods, and can offer naturescaping assistance to many residential, business, and public projects.

Integrated Pest Management (IPM) is an effective and environmentally sensitive approach to pest management that relies on a combination of common-sense practices. IPM programs use current, comprehensive information on the life cycles of pests and their interaction with the environment. This information, in combination with available pest control methods, is used to manage pest damage by the most economical means, and with the least possible hazard to people, property, and the environment.

The IPM approach can be applied to both agricultural and nonagricultural settings, such as the home, garden, and workplace. IPM takes advantage of all appropriate pest management options, including -- but not limited to -- the judicious use of pesticides. In contrast, *organic* food production applies many of the same concepts as IPM but limits the use of pesticides to those that are produced from natural sources, as opposed to synthetic chemicals.

IPM is not a single pest control method but, rather, a series of pest management evaluations, decisions, and controls. Integrated pest management is a sustainable approach to managing pests by combining biological, cultural, physical, and chemical tools. Municipalities can encourage homeowners to practice IPM and train/encourage municipal maintenance crews to use these techniques for managing public green areas. There are many methods and types of integrated pest management, including the following:

- Mulching can be used to prevent weeds where turf is absent, fencing installed to keep rodents out, and netting used to keep birds and insects away from leaves and fruit.
- Visible insects can be removed by hand (with gloves or tweezers) and placed in soapy water or vegetable oil. Alternatively, insects can be sprayed off the plant with water or in some cases vacuumed off of larger plants.
- Store-bought traps, such as species-specific, pheromone-based traps or colored sticky cards, can be used.
- Sprinkling the ground surface with abrasive diatomaceous earth can prevent infestations by soft-bodied insects and slugs. Slugs also can be trapped in small cups filled with beer that are set in the ground so the slugs can get in easily.
- In cases where microscopic parasites, such as bacteria and fungi, are causing damage to plants, the affected plant material can be removed and disposed of. (Pruning equipment should be disinfected with bleach to prevent spreading the disease organism.)
- Small mammals and birds can be excluded using fences, netting, tree trunk guards.
- Beneficial organisms, such as bats, birds, green lacewings, ladybugs, praying mantis, ground beetles, parasitic nematodes, trichogramma wasps, seedhead weevils, and spiders that prey on detrimental pest species can be promoted.

Limitations

The overriding public desire for green lawns is probably the biggest impediment to limiting pollution from this source. For example, when residents were asked their opinions on more than 30 statements about lawns in a Michigan survey, the most favorable overall response was to the statement "a green, attractive lawn is an important asset in a neighborhood" (De Young, 1997). Nationally, homeowners spend about $27 billion each year to maintain their own yard or to pay someone else to do it (PLCAA, 1999). In terms of labor, a majority of homeowners spend more than an hour a week taking care of the lawn (Aveni, 1994, De Young, 1997). Convincing residents that a nice, green lawn can be achieved without using large amounts of chemicals and fertilizers is difficult when conventional lawn care techniques are often seen as more effective, less time-consuming, and more convenient.

Effectiveness

The effectiveness of pollution prevention programs designed to educate residents on lawn care and landscaping practices has not been well documented to date. However, the need for such programs is evident. Source area monitoring in Marquette, Michigan, found that nitrogen and phosphorus concentrations in residential lawn runoff were 5 to 10 times higher than from any other source area (CWP, 1999). This report confirms earlier Wisconsin research findings that residential lawns yielded the highest phosphorus concentrations of 12 urban pollutant sources examined (Bannerman et al, 1993).

A critical step in crafting an education program is to select the right outreach techniques to send the lawn care message. From the results of a number of market surveys, two outreach techniques have shown some promise in actually changing behavior -- media campaigns and intensive training. Media campaigns typically use a mix of radio, TV, direct mail, and signs to broadcast a general watershed message to a large audience. Intensive training uses workshops, consultation, and guidebooks to send a much more complex message to a smaller and more interested audience. Intensive training requires a more substantial time commitment, ranging from several hours to a few days.

From evaluations of several market surveys, it appears that media campaigns and intensive training can each produce up to a 10- to 20-percent improvement in selected watershed behaviors among their respective target populations. A combination of both outreach techniques is probably needed in most watersheds, as each complements the other. For example, media campaigns cost just a few cents per watershed resident reached, while intensive training can cost several dollars for each resident that is actually influenced. Media campaigns are generally better at increasing awareness and sending messages about negative watershed behaviors. Intensive training, on the other hand, is superior at changing individual practices in the home, lawn, and garden.

Cost Considerations

The cost of creating and maintaining a program that addresses lawn care and landscaping practices and water quality varies depending on the intensity of the effort and what outreach techniques are selected. Media campaigns often require a greater amount of money to create, but are also most likely to reach the largest proportion of the community. Intensive training campaigns may not require as large a creation cost, but often require more staff time. Production costs for materials such as flyers and brochures is often inexpensive ($0.10 to $0.50 per brochure), and soil kits and testing may be provided through a local university to reduce expense. Many cooperative extension offices have already produced materials on lawn care and landscaping techniques to protect water quality, and program managers may save money by utilizing these available resources.

An example of a program that educates residents on better lawn care practices is The Water-Wise Gardener Program of the Prince William County, Virginia, Cooperative Extension service. Through the changes in behavior of more than 700 participants, an estimated aggregate reduction in fertilizer application of 20 tons has been realized in the county in 5 years. The program operates on an average annual budget of approximately $30,000 and requires the yearly time of 1.5 staff persons. Expense is deferred by the use of master gardener volunteers, who act as consultants for volunteer lawns where lawn care practices have been implemented. The program has recently been developed into a regional model that has been applied in several other Virginia counties.

References

Assing, J. 1994. *Survey of public attitudes February and July, 1994.* Russian Hill Associates. Alameda County Urban Runoff Clean Water Program. San Francisco CA. 84 pp.

Aveni, M. 1994. Homeowner survey reveals lawn management practices in Virginia. Technical Note 26. *Watershed Protection Techniques* 1(2):85–86.

Barth, C. 1995a. Nutrients: from the lawn to the stream. *Watershed Protection Techniques* 2(1): 239–246.

Barth, C. 1995b. Toward a low input lawn. *Watershed Protection Techniques* 2(1): 254–264.

Bowers, Keith J. 1994. A Call for the End of Landscaping, *Watershed Protection Techniques*, Vol. 1, No. 3. pp 112–113.

Center for Watershed Protection (CWP). 1999. Diazinon sources in runoff from the San Francisco Bay region. Technical Note 106. *Watershed Protection Techniques* 3(1): 613–616.

Center for Watershed Protection (CWP). 1999. *On Watershed Behavior.* [www.cwp.org].

De Young, R. 1997. *Healthy Lawn and Garden Survey: Data Analysis Report.* Rouge River National Wet Weather Demonstration Project. Oakland County, MI. 40 pp.

Israel, G., S. Pinheiro and G. Knox. 1995. *Environmental Landscape Management Assessing Practices Among Commercial Groups.* University of Florida. Cooperative Extension Service. Bulletin 307. Monticello, FL. 18 pp.

References (Continued).

Minnesota Center for Survey Research (MCSR). 1997. *Lawn Care Survey Results and Technical Report*, Technical Report 97–9. University of Minnesota. Minneapolis, MN. 60 pp.

Morris, W. and D. Traxler. 1996. *Dakota County Subwatersheds: Residential Survey on Lawn Care and Water Quality*. Dakota County, MN, Decision Resources, Ltd.

Natural Resources Defense Council. 1999. *Stormwater Strategies: Community Responses to Runoff Pollution*. Natural Resources Defense Council, Inc, New York, NY.

NYDEP. 1997. *Seven Steps to a Water-Saving Garden*. [http://www.ci.nyc.ny.us/html/dep/html/xeris.html]. Accessed October 1, 2000.

Professional Lawn Care Association of America (PLCAA). 1999. *Profile of lawn care industry*. [http://www.plcaa.org].

Schueler, T. 1995a. Nutrient movement from the lawn to the stream. *Watershed Protection Techniques* 2(1): 239–246.

Schueler, T. 1995b. Urban Pesticides: from the lawn to the stream. *Watershed Protection Techniques* 2(1): 247–253.

Swann, C. 1999. *A Survey of Residential Nutrient Behaviors in the Chesapeake Bay*. Widener-Burrows, Inc. Chesapeake Research Consortium. Center for Watershed Protection. Ellicott City, MD. 112 pp.

Syferd, E. 1995. Water Quality Consortium. *Research Summary Report.* Seattle, WA.

Texas A&M University(TAMU), Texas Agricultural Extension Service. 1996. *Xeriscaping*. [http://aggie-horticulture.tamu.edu/plantanswers/drought/drought1.html]. Accessed October 2000.

Relf, D., and Day, S.D. 1994. *The Virginia Gardener Easy Reference to Sustainable Landscape Management and Water Quality Protection*. Virginia Cooperative Extension Publication 426-612. Virginia Cooperative Extension, Blacksburg, VA.

Virginia Department of Conservation and Recreation. 1999. Personal Communication. Virginia Department of Conservation and Recreation, Richmond, VA.

Pest Control

Pollution Prevention/Good Housekeeping for Municipal Operations

Description

The use of pesticides, such as those pictured here, should be limited to avoid runoff contamination

This management measure involves limiting the impact of pesticides on water quality by educating residents and businesses on alternatives to pesticide use and proper storage and on application techniques. The presence of pesticides in storm water runoff has a direct impact on the health of aquatic organisms and can present a threat to humans through contamination of drinking water supplies. The pesticides of greatest concern are insecticides, such as diazinon and chloropyrifos (CWP, 1999 and Schueler, 1995), which even at very low levels can be harmful to aquatic life. A recent study of urban streams by the U.S. Geological Survey found that some of the more commonly used household and garden insecticides occurred at higher frequencies and concentrations in urban streams than in agricultural streams (USGS, 1999). The study also found that these insecticide concentrations were frequently in excess of USEPA guidelines for protection of aquatic life.

The major source of pesticides to urban streams is home application of products designed to kill insects and weeds in the lawn and garden. It has been estimated that an average acre of a well-maintained urban lawn receives an annual input of 5 to 7 pounds of pesticides (Schueler, 1995). Pesticide pollution prevention programs try to limit adverse impacts of insecticides and herbicides by providing information on alternative pest control techniques other than chemicals or explaining how to determine the correct dosages needed to manage pests. Lawn care and landscaping management programs often include pesticide use management as part of their outreach message.

Applicability

EPA estimates that nearly 70 million pounds of active pesticide ingredients are applied to urban lawns each year. Table 1 compares surveys on residential pesticide use in eleven different areas of the country, broken down by insecticides and herbicides use. It appears that pesticide application rates vary greatly, ranging from a low of 17 percent to a high of 87 percent, but climate is an important factor in determining insecticide and herbicide use.

Table 1. A comparison of eleven surveys of residential insecticide and weedkiller use

Study	Number of Respondents	% Using Insecticides	% Using Herbicides
Chesapeake Bay Swann, 1999	656	21%	–
Maryland, Kroll and Murphy,1994	403	42%	32%
Virginia, Aveni, 1998	100	66%	–
Maryland, Smith, 1994	100	23%	n/a
Minnesota, Morris and Traxler, 1997	981	–	75%
Michigan, De Young, 1997	432	40%	59%
Minnesota, Dindorf, 1992	136	–	76%
Wisconsin, Kroupa, 1995	204	17%	24% **
Florida, Knox et al, 1995	659	83%	–
Texas, NSR, 1998	350	87%	–
California, Scanlin and Cooper, 1997	600	50%	–

Notes: (**) note difference in self-reported herbicide use and those that use a weed and feed product (herbicide combined with fertilizer)

Insecticides appear to be applied more widely in warm weather climates where insect control is a year-round problem (such as Texas, California, and Florida). Anywhere from 50 to 90 percent of residents reported that they had applied insecticides in the last year in warm-weather areas. This can be compared to 20 to 50 percent levels of insecticide use reported in colder regions, where hard winters can help keep insects in check. By contrast, herbicide application rates tend to be higher in cold weather climates to kill the weeds that arrive with the onset of spring (60 to 75 percent in the Michigan, Wisconsin, and Minnesota surveys).

Design Considerations

The use of integrated pest management (IPM) is a popular way for program managers to educate residents and businesses on alternatives to chemical pesticides. IPM reflects a holistic approach to pest control that examines the interrelationship between soil, water, air, nutrients, insects, diseases, landscape design, weeds, animals, weather, and cultural practices to select an appropriate pest management plan. The goal of an IPM program is not to eliminate pests but to

manage them to an acceptable level while avoiding disruptions to the environment. An IPM program incorporates preventative practices in combination with nonchemical and chemical pest controls to minimize the use of pesticides and promote natural control of pest species. Three different nonchemical pest control practices biological (good bugs that eat pests), cultural (handpicking of pests, removal of diseased plants, etc.), and mechanical (zappers, paper collars, etc) are used to limit the need for chemicals. In those instances when pesticides are required, programs seek to have users try less toxic products such as insecticidal soaps. The development of higher tolerance levels among residents for certain weed species is a central concept of IPM programs for reducing herbicide use.

Education on the proper use of pesticides is often included in many lawn care and landscaping management programs. Most often this is in the form of informational brochures or fact sheets on pesticide use around the home or garden. These information packets include tips on identifying pest problems and selecting treatment approaches that reduce environmental impacts; less-toxic pest control products if chemical control is necessary; and the proper mixing, application rates, and cleanup procedures for pesticide use. Program managers can consult cooperative extension programs and university agricultural programs for more information regarding pest control techniques that are more water quality friendly.

Limitations

The public perception that no alternative to pesticide use exists is probably the greatest limitation that program managers will face. Surveys tell us that the public has a reasonably good understanding about the potential environmental dangers of pesticides. Several surveys indicate that residents do understand environmental concerns about pesticides, and consistently rank them as the leading cause of pollution in the neighborhood (Elgin DDB, 1996). Even so, pesticide use still remains high in many urban areas (see Table 1). The time required for homeowners to learn more about alternative pest control techniques may also limit program effectiveness. Many residents prefer the ease of spraying a chemical on their lawns to other pest control techniques they perceive as more time intensive and less reliable. Managers should recognize that IPM programs have their own limitations, including questions about the effectiveness of alternative pest control techniques.

Effectiveness

A national study of the effectiveness of alternative pest control programs at reducing pesticide use and protecting water quality has not yet been performed. Cooperative extension and university agriculture programs across the country have performed studies of the ability of distinct alternative pest control techniques at limiting pesticide use, but a synthesis of these individual studies into a national report has not been performed. However, the need for pesticide control programs is evident from recent studies on the presence of insecticides in storm water. Results of recent sampling of urban streams caused the USGS to conclude that the presence of insecticides in urban streams may be a significant obstacle to restoring urban streams. (USGS, 1999). Table 2 examines eight studies on storm water runoff and insecticide concentrations and provides an example of how insecticides persist even after their use is discontinued.

Additional research done in the San Francisco Bay Region regarding diazinon use further illustrates the need for pest control programs. Results of the study show that harmful diazinon levels can be produced in urban streams from use at only a handful of individual homes in a

given watershed (CWP, 1999). Due to the solubility of diazinon, current storm water and wastewater treatment technologies cannot significantly reduce diazinon levels. The best tool for controlling diazinon in urban watersheds is through source control by educating residents and businesses on pesticide alternatives and safe application.

An example of successful use of IPM is the Grounds Maintenance Program for the City of Eugene, Oregon. This program was started in the early 1980's and includes all the city public parks and recreation areas. The city uses a variety of IPM methods, including water blasting to remove aphids, insecticidal soaps, and limited use of pesticides. The city has also adopted higher tolerance levels for certain weed and pest species that reduces the need to apply pesticides and herbicides. Since the program's inception, pesticide usage by the City of Eugene has dropped bay more than 75 percent (Lehner et. al., 1999). Although no exact cost savings have been calculated from the use of the IPM program, the city turf and grounds supervisor believes the program saves money and has little citizen opposition.

Table 2: Banned or restricted insecticides found in storm water runoff concentrations in µg/l (ppb) (Source: Schueler, 1995)

Study	Chlordane	Lindane	Dieldrin	Other
Baltimore Kroll/Murphy	0.52	0.18	2.44	–
Rhode Island Cohen	Detected	NA	NA	NA
Atlanta Hippe	NA	0.01 (0.048)	NA	–
Atlanta Thomas	Detected	NX	NX	heptachlor
Milwaukee Bannerman	Detected	Detected	Detected	DDT, DDE
Washington MWCOG	0.2	0.2	0.2	Heptachlor
Northern Virginia Dewberry and Davis	ND	Trace	ND	Endrin
Toronto D'Andrea	NA	0.5 to 2	0.1 to 2	–
Toronto D'Andrea	NA	0.5 to 2	0.1 to 2	–
ND=Not Detected, NA=Not Analyzed, NX= Detection reported only if they exceeded water quality standards.				

Cost Considerations

The cost of educating residents on proper pesticide use varies greatly depending on the intensity of the effort. Some cities have begun partnerships that include training of retail employees on IPM techniques, similar to lawn care and landscaping programs. In addition, promotional materials and displays on safer pesticide alternatives are set up. The cost of staff time for training and production of materials must be included in any cost estimate. Since there are currently a

number of good fact sheets on IPM and pesticide use available through cooperative extension programs, managers should consider using this source instead of creating a new one. Another way to save cost would be to utilize master gardener volunteers to help with training, for both residents and store employees.

References

Aveni, M. 1998. *Water-wise gardener program: Summary report.* Unpublished data. Virginia Cooperative Extension. Prince William County, VA.

Bannerman, R. 1994. Unpublished data on diazinon concentrations and toxicity in stormwater ponds. Bureau of Water Management. Wisconsin DNR. Madison, WI.

California Environmental Protection Agency. 1995. *Consumer Factsheet: Urban IPM.* Department of Pesticide Regulation, Sacramento, CA.

Center for Watershed Protection (CWP). 1999. Diazinon sources in runoff from the San Francisco Bay region. Technical Note 106. *Watershed Protection Techniques* 3(1): 613–616.

Cohen, S., S. Nickerson, R. Maxey, A. Dupuy, and J. Senita. 1990. A groundwater monitoring study for pesticides and nitrates associated with golf courses on Cape Cod. *Groundwater Monitoring Review* 5: 166–173.

D'Andrea, M., and D. Maunder. 1994. *Characterization of Urban Nonpoint Source Discharges in Metropolitan Toronto.*

Dewbery and Davis. 1989. *Toxicity of Sediments from BMP Ponds.* Final Report. Prepared for Northern Virginia Planning District Commission. Annandale, VA. 26 pp.

De Young, R. 1997. *Healthy Lawn and Garden Survey: Data Analysis Report.* Rouge River National Wet Weather Demonstration Project. Oakland County, MI. 40 pp.

Dindorf, C. 1992. *Toxic and Hazardous Substances in Urban Runoff.* Hennepin Conservation District. Minnetonka, MN. 98 pp.

Elgin DDB. 1996. *Public Awareness Study: Summary Report.* The Water Quality Consortium. Seattle, WA. 24 pp.

Hippe, D, D. Wangsness, E. Frick, and J. Garret. 1994. *Pesticide Monitoring in the Apalachicola-Chattahoochee-Flint River Basin.* US Geological Survey. National Water Quality Assessment Program. Water Resources Investigation Report 94–118. Atlanta, GA.

Knox, G., A. Fugate, and G. Israel. 1995. *Environmental Landscape Management Use of Practices by Florida Consumers.* University of Florida Cooperative Extension Service. Bulletin 307. Monticello, FL. 26 pp.

Kroll, J., and D. Murphy. 1994b. Pilot monitoring for 14 pesticides in Maryland surface waters. Maryland Dept. of Environment. *Chesapeake Bay Program Technical Report* 93–020. 108 pp.

References (Continued).

Kroupa and Associates. 1995. *Westmorland Lawn Care Survey*. Milwaukee, Wisconsin. 12 pp.

Lehner, P., G. Aponte Clarke, D. Cameron, and A. Frank. 1999. *Stormwater Strategies: Community Responses to Runoff Pollution*. Natural Resources Defense Council, New York, NY.

Metropolitan Washington Council of Governments. 1983. *Urban Runoff in the Washington Metropolitan Area: Final NURP Report*. Department of Environmental Programs. Washington, DC. 222 pp.

Morris, W., and D. Traxler. 1996. *Dakota County Subwatersheds: Residential Survey on Lawn Care and Water Quality*. Dakota County, Minnesota, Decision Resources, Ltd.

National Service Research (NSR). 1998. *Pesticide Usage and Impact Awareness Study: Executive Summary*. City of Forth Worth Water Department. Fort Worth Texas. 44 pp.

Scanlin, J., and A. Cooper. 1997. *Outdoor Use of Diazinon and Other Insecticides: Final Draft*. Alameda County Clean Water Program and Alameda County Flood Control and Water Conservation District. Oakland, CA. 20 pp.

Schueler, T. 1995. Urban pesticides: from the lawn to the stream. Center for Watershed Protection, Ellicott City, MD. *Watershed Protection Techniques* 2(1): 247–253.

Smith, J. 1996. Public survey used to estimate pollutant loads in Maryland. Technical Note 73. *Watershed Protection Techniques* 2(2): 361–363.

Swann, C. 1999. A *Survey of Residential Nutrient Behaviors in the Chesapeake Bay*. Widener-Burrows, Inc. Chesapeake Research Consortium. Center for Watershed Protection. Ellicott City, MD. 112 pp.

Thomas, P., and S. McClelland. 1994. NPDES monitoring Atlanta Georgia Region. In US EPA. 1983. Results of the Nationwide Urban Runoff Project. Final Report. Vol 1. U.S. Environmental Protection Agency, Office of Water, Washington, DC.

United States Geological Survey (USGS). 1999. *The Quality of Our Nation's Waters Nutrients and Pesticides*. U.S. Geological Circular #1225. [http://water.usgs.gov].

Parking Lot and Street Cleaning

Pollution Prevention/Good Housekeeping for Municipal Operations

Description

A street sweeper cleans up pollutants and sediments on the street to reduce the amount of pollutants entering receiving waters

This management measure involves employing pavement cleaning practices such as street sweeping on a regular basis to minimize pollutant export to receiving waters. These cleaning practices are designed to remove from road and parking lot surfaces sediment debris and other pollutants that are a potential source of pollution impacting urban waterways (Bannerman, 1999). Although performance monitoring for the Nationwide Urban Runoff Program (NURP) indicted that street sweeping was not very effective in reducing pollutant loads (USEPA, 1983), recent improvements in street sweeper technology have enhanced the ability of present day machines to pick up the fine grained sediment particles that carry a substantial portion of the storm water pollutant load. Many of today's sweepers can now significantly reduce the amount of street dirt entering streams and rivers, some by significant amounts (Runoff Report, 1998). A debate as to whether this ability to pick up finer particles will improve the overall pollutant removal effectiveness of street sweepers is ongoing, and further research is required to establish the optimal sweeping frequency for pollutant removal and what streets are most appropriate for a sweeping program.

Applicability

Street sweeping is practiced in most urban areas, often as an aesthetic practice to remove sediment buildup and large debris from curb gutters. In colder climates, street sweeping is used during the spring snowmelt to reduce pollutant loads from road salt and to reduce sand export to receiving waters. Seventy percent of cold climate storm water experts recommend street sweeping during the spring snowmelt as a pollution prevention measure (CWP, 1997). The frequency and intensity of rainfall for a region are also key variables in determining how streets need to be swept to obtain a desired removal efficiency. Other factors that affect a street sweeper's ability to reduce nonpoint pollution include the condition of the street, its geographical location, the operator's skill, the presence of parked cars, and the amount of impervious area devoted to rooftop.

Design Considerations

One factor considered most essential to the success of street sweeping as a pollutant removal practice is use of the most sophisticated sweepers available. Innovations in sweeper technology have improved the performance of these machines at removing finer sediment particles, especially for machines that use vacuum-assisted dry sweeping to remove particulate matter. By using the most sophisticated sweepers in areas with the highest pollutant loads, greater reductions in sediment and accompanied pollutants can be realized.

Another important aspect of street sweeping programs is the ability to regulate parking. The ability to impose parking regulations in densely populated areas and on heavily traveled roads is essential.

The frequency and location of street sweeping is another consideration for any program. How often and what roads to sweep are determined by the program budget and the level of pollutant removal the program wishes to achieve. Computer modeling of pollutant removal in the Pacific Northwest suggests that the optimum sweeping frequency appears to be once every week or two (CWP, 1999). More frequent sweeping operations yielded only a small increment in additional removal. The model also suggests that somewhat higher removal could be obtained on residential streets as opposed to more heavily traveled arterial roads.

Sweeping of parking lots is also employed as a nonstructural management practice for industrial sites. This sweeping involves using brooms to remove small quantities of dry chemicals and solids from areas that are exposed to rainfall or storm water runoff. While the effectiveness of this practice at pollutant removal is unknown, the sweeping and proper disposal of materials is a reasonably inexpensive method of pollution prevention that requires no special training or equipment.

Limitations

For street sweeping, the high cost of current sweeper technologies is a large limitation to using this management practice. With costs approaching $200,000 for some of the newer sweeper technologies, storm water managers with limited budgets must consider the high equipment cost together with the uncertainty about pollutant removal efficiency to decide whether a sweeping program is an attractive management option. The potential inability to restrict parking in urban areas may present another limitation. Other possible limitations include the need for sweeper operator training, the inability of current sweeper technology to remove oil and grease, and the lack of solid evidence regarding the expected levels of pollutant removal. Proper disposal of swept materials might also be a limitation.

Maintenance Considerations

Street cleaning programs require a significant investment of capital and a yearly operation and maintenance budget. Sweepers have a useful life of about four years, and proper maintenance can greatly improve sweeping efficiency. Arrangements for disposal of the swept material collected must also be made, as well as accurate tracking of the streets swept and the frequency of sweeping. The operation and maintenance costs for two types of sweepers are included in Table 1.

Effectiveness

Street sweeping programs had largely fallen out of favor as a pollutant removal practice following the 1983 NURP report, but improvements in sweeper technology have caused a recent reevaluation of their effectiveness. New studies show that conventional mechanical broom and vacuum-assisted wet sweepers reduce nonpoint pollution by 5 to 30 percent and nutrient content by 0 to 15 percent. However, newer dry vacuum sweepers can reduce nonpoint pollution by 35 to 80 percent and nutrients by 15 to 40 percent for those areas that can be swept (Runoff Report, 1998).

While actual reductions in storm water pollutants have not yet been established, information on the reductions in finer sediment particles that carry a significant portion of the storm water pollutant load is available. Recent estimates are that the new vacuum assisted dry sweeper might achieve a 50–88 percent overall reduction in the annual sediment loading for a residential street, depending on sweeping frequency (Bannerman, 1999).

A benefit of high-efficiency street sweeping is that by capturing pollutants before they are made soluble by rainwater, the need for structural storm water control measures might be reduced. Structural controls often require costly added measures, such as adding filters to remove some of these pollutants and requiring regular manpower to change-out filters. Street sweepers that can show a significant level of sediment removal efficiency may prove to be more cost-effective than certain structural controls, especially in more urbanized areas with greater areas of pavement.

Cost Considerations

The largest expenditures for street sweeping programs are in staffing and equipment. The capital cost for a conventional street sweeper is between $60,000 and $120,000. Newer technologies might have prices approaching $180,000. The average useful life of a conventional sweeper is about four years, and programs must budget for equipment replacement. Sweeping frequencies will determine equipment life, so programs that sweep more often should expect to have a higher cost of replacement.

If investing in newer technologies, training for operators must be included in operation and maintenance budgets. Costs for public education are small, and mostly deal with the need to obey parking restrictions and litter control. Parking tickets are an effective reminder to obey parking rules, as well as being a source of revenue.

Table 1 gives sweeper cost data for two types of sweepers: mechanical and vacuum-assisted. The table shows that while the purchase price of vacuum-assisted sweepers is significantly higher, the operation and maintenance costs are lower.

Table 1. Estimated costs for two types of street sweepers

Sweeper Type	Life (Years)	Purchase Price ($)	O&M Cost ($/curb mile)	Sources
Mechanical	5	75,000	30	Finley, 1996 SWRPC, 1991
Vacuum-assisted	8	150,000	15	Finley, 1996 Satterfield, 1991

Cost data for two cities in Michigan provide some guidance on the overall cost of a street cleaning program. Table 2 contains a review of the labor, equipment, and material costs for street cleaning for the year 1995 (Ferguson et al., 1997). The average cost for street cleaning was $68/curb mile and approximately 11 curb miles/day were swept.

Table 2. The cost of street cleaning for two cities in Michigan

City	Labor	Equipment	Material and Services	Total
Livonia	$23,840	$85,630	$5,210	$114,680
Plymouth Township	$18,050	$14,550	$280	$32,880

References

Bannerman, R. 1999. Sweeping Water Clean. *American Sweeper Magazine*, Huntsville, AL. Volume 7, Number 1.

Camp Dresser & McKee et al. 1993. *California Storm Water Municipal Best Management Practice Handbook*. Stormwater Quality Task Force, Sacramento, CA.

Caraco, D., and R. Claytor. 1997. *Stormwater BMP Design Supplement for Cold Climates*. Center for Watershed Protection, Ellicott City, MD.

Claytor, R. 1999. New Developments in Street Sweeper Technology. Center for Watershed Protection, Ellicott City, MD. *Watershed Protection Techniques*, Volume 3, Number 1.

Finley, S. 1996. Sweeping Works. *Pavement Maintenance and Reconstruction*. October/November. pp. 16–17

Ferguson et.al. 1997. Cost *Estimating Guidelines: Best Management Practices and Engineered Controls*. Rouge River National Wet Weather Demonstration Project, Wayne County, MI.

A Clean Sweep Now Possible. Runoff Report. The Terrene Institute, Alexandria, VA. Vol. 6 No. 4, July/August 1998.

Satterfield, C. 1996. *Enviro Whirl 1 PM-10 Efficiency Study Removing Reentrained Road Dust*. Lake, CA.

SWRPC. 1991. *Costs of Urban Nonpoint Source Water Pollution Control Measures*. Southeastern Wisconsin Regional Planning Commission. Waukesha, WI.

USEPA. 1992. *Storm Water Management for Industrial Activities: Developing Pollution Prevention Plans and Best Management Practices*. U.S. Environmental Protection Agency, Office of Wastewater Enforcement and Compliance, Washington, DC.

Roadway and Bridge Maintenance

Pollution Prevention/Good Housekeeping for Municipal Operations

Description

This practice involves pollution prevention techniques that reduce or eliminate pollutant loadings from existing road surfaces as part of an operation and maintenance program. Substantial amounts of sediment and pollutants are generated during daily roadway and bridge use and scheduled repair operations, and these pollutant loadings can threaten local water quality by contributing heavy metals, hydrocarbons, sediment, and debris to storm water runoff. Table 1 shows some of the constituents that can be present in highway runoff and their primary sources.

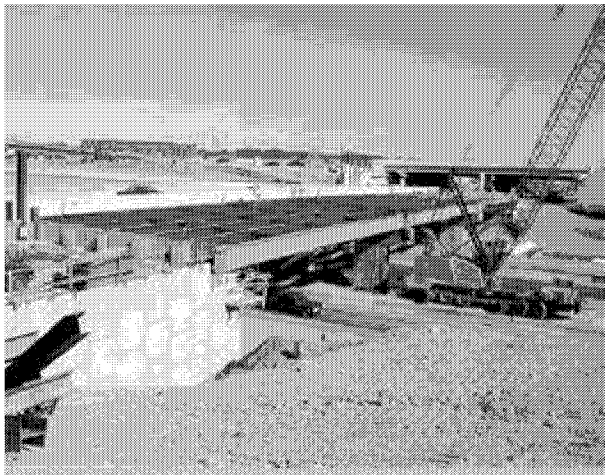

Pollutants generated from road and bridge maintenance can be minimized with good housekeeping practices (Source: VDOT, 2000)

As Table 1 demonstrates, numerous pathways for pollutant deposition on roadways and bridges influence the water quality of storm water runoff. Routine performance of general maintenance activities such as sweeping, vegetation maintenance, and cleaning of runoff control structures can help alleviate the impacts of these pollutants. Modifications in roadway resurfacing practices and application techniques for salt and other deicers can also help reduce pollutant loads to storm water runoff and protect the quality of receiving waters.

Table 1. Highway runoff constituents and their primary sources (Source: USEPA, 1993)

Constituent	Primary Sources
Particulates	Pavement wear, vehicles, atmosphere
Nitrogen, Phosphorus	Atmosphere, roadside fertilizer application
Lead	Tire wear, auto exhaust
Zinc	Tire wear, motor oil, grease
Iron	Auto body rust, steel highway structures, moving engine parts
Copper	Metal plating, brake lining wear, moving engine parts, bearing and bushing wear, fungicides and insecticides
Cadmium	Tire Wear, insecticides

Table 1. Highway runoff constituents and their primary sources (Source: USEPA, 1993) (Continued)

Chromium	Metal plating, moving engine parts, brake lining wear
Nickel	Diesel fuel and gasoline, lubricating oil, metal plating, brake lining wear, asphalt paving
Manganese	Moving engine parts
Cyanide	Anticake compound used to keep deicing salt granular
Sodium, Calcium, Chloride	Deicing salts
Sulphate	Roadway beds, fuel, deicing salts
Petroleum	Spills, leaks or blow-by of motor lubricants, antifreeze and hydraulic fluids, asphalt surface leachate

Applicability

Roadway systems are a large part of the infrastructure of urban areas across the country, and require regular repairs and maintenance due to traffic use and climatic conditions. The level of pollutants found in road and bridge runoff is variable and is determined by a number of factors in addition to traffic volume and climate. Other factors affecting pollutant levels include surrounding land use, the design of the bridge or roadway, the presence of roadside vegetation, the use of insecticides, and the frequency of accidents and spills that can introduce hazardous chemicals. In colder climates, the amount of deicer applied to melt ice and snow can also influence the level of certain pollutants in road runoff and its impacts on local water quality.

Design Considerations

Road and bridge maintenance programs have a number of options for reducing the level of pollutants generated during the maintenance of existing road surfaces. Changes in the methods used for maintaining road surfaces, removing debris and sediment from roadways, and cleaning of runoff control structures can help improve the overall quality of storm water discharges from roads and bridges.

Proper planning for road and bridge resurfacing operations is a simple but effective method to control pollution. Many techniques can be implemented to control the impacts of this maintenance operation. First, paving operations should be performed using concrete, asphalt, or other sealers only in dry weather situations to prevent contamination of runoff. Second, proper staging techniques should be used to reduce the spillage of paving materials during the repair of potholes and worn pavement. These techniques can include covering storm drain inlets and manholes during paving operations; using erosion and sediment control measures to decrease runoff from repair sites; and utilizing pollution prevention materials such as drip pans and absorbent material for all paving machines to limit leaks and spills of paving materials and fluids.

Finally, resurfacing operations could employ porous asphalt for pothole repair and for shoulder areas to reduce the level of storm water runoff from road systems. For more information on permeable road surface materials, see the Porous Pavement fact sheet.

Good cleaning practices can help diminish impacts to storm water runoff. Sweeping and vacuuming of heavily traveled roadways to remove sediment and debris can reduce the amount of pollutants in runoff. Street sweeping as a pollution source control is discussed more extensively in the Parking Lot and Street Cleaning fact sheet. Regular cleaning of runoff control structures such as catch basins can help reduce sediment loads in runoff that will end up in local waterways (see Catch Basins fact sheet).

Proper application of road salt or other deicers also reduces storm water pollution. By routinely calibrating spreaders, a program manager can prevent over-application of deicing materials. In addition to reducing the effects of these materials on the aquatic environment, cost savings may be realized due to reductions in the purchase of deicing materials. Training for transportation employees in proper deicer application techniques, the timing of deicer application, and what type of deicer to apply will also determine the impacts on water quality and aquatic habitat.

Maintenance practices for roadside vegetation also determine the storm water quality of road runoff. Restrictions on the use of herbicides and pesticides on roadside vegetation, and training to ensure that employees understand the proper handling and application of pesticides and other chemicals, can help prevent contamination of runoff. Selection of roadside vegetation with higher salt tolerances will also help to maintain vegetated swales and biofilters that filter out runoff. For more information on vegetated storm water practices, see the Grassed Filter Strips fact sheet.

Bridge runoff may require additional maintenance practices to eliminate storm water runoff impacts. In addition to some of the roadway practices listed above improved, practices in bridge siting and design can help reduce water quality impacts. One technique is to avoid using bridge scupper drains for any new bridges and to routinely clean existing ones to prevent sediment and debris buildup. Scupper drains can cause direct discharges to surface waters and have been found to carry relatively high concentrations of pollutants (CDM, 1993). Program managers should consider endorsing retrofits of scupper drains with catch basins or redirecting water from these drains to vegetated areas to provide treatment. Other techniques such as using suspended tarps, booms, and vacuums to capture pollutants (e.g., paint, solvents, rust, and paint scrapings) generated during bridge maintenance will also help reduce impacts to receiving waters. In addition, using deicers such as glycol, urea, or calcium magnesium acetate (CMA) reduces the corrosion of metal bridge supports that can occur when salt is used.

Limitations

Generally, limitations to instituting pollution prevention practices for road and bridge maintenance involve the cost for additional equipment and training. Since maintenance of roadways and bridges is already required in all communities, staffing is usually in place and alteration of current practices should not require additional staffing or administrative labor.

Limitations may arise in the location of new bridges. The availability and cost of land and other economic and political factors may dictate where the placement of a new bridge will occur. Better design of the bridge to control runoff is required if it is being placed near sensitive waters. The practice of controlling paved areas to limit impervious surface might also be restricted by community regulations of required widths for roadways and shoulders.

Effectiveness

Limited data are available on the actual effectiveness of road and bridge maintenance practices at removing pollutants from storm water runoff. Table 2 examines the effectiveness and cost of some of the operation and maintenance practices recommended for storm water pollution control.

Table 2. Road and bridge maintenance management practices: cost and effectiveness (Source: USEPA, 1993)

	Effectiveness (% Removal)[a]		**Cost**
Maintaining Roadside Vegetation	Sediment Control: 90% average P and N: 40% average COD, Lead, and Zinc: 50% average TSS: 60% average		Natural succession allowed to occur Average: $100/acre/year Range: $50-$200/acre/year
Street Sweeping	Smooth Street Frequent Cleaning: TSS: 20% COD: 5% Lead: 25%	Smooth Street Infrequent Cleaning: TSS: N/A COD: N/A Lead: 5%	Average: $20/curb mile Range: $10–$30/curb mile
Litter Control	N/A		All are accepted as economical practices to control or prevent storm water impacts.
General Maintenance	N/A		
Minimizing Deicer Application	N/A		

[a]P=phosphorus; N=nitrogen; TSS=total suspended solids; COD=chemical oxygen demand

Although data may be limited on cost and effectiveness, preventative maintenance and strategic planning are time-proven and cost-effective methods to limit contamination of storm water runoff. It can be assumed that the management practices recommended will have a positive affect on storm water quality by working to reduce pollutant loads and the quantity of runoff. Protecting and restoring roadside vegetation, removal of debris and sediment from roads and bridges, and directing runoff to vegetated areas are all effective ways to treat storm water runoff. Other practices, such as minimizing deicer application, litter control, and proper handling of fertilizers, pesticides, and other toxic materials, work to control some of the pathways of storm water pollution. Employing good road and bridge maintenance practices is an efficient and low-cost means of eliminating some of the impacts of pollutants associated with road systems on local streams and waterways.

Cost Considerations

The maintenance of local roads and bridges is already a consideration of most community public works or transportation departments. Therefore, the cost of pollutant reducing management practices will involve the training and equipment required to implement these new practices. Cost data for some of the new practices that have been recommended are included in Table 2.

Costs may vary greatly in the type of deicer selected for application. Table 3 includes a comparison of four different deicers and the cost for application. It should be noted that CMA has a higher cost than the other deicers, but that reductions in corrosion to infrastructure, damage to roadside vegetation, and amount of material used may offset the higher cost.

Table 3. The estimated cost of four deicer types (Source: Caraco and Claytor, 1997)

Deicer Type	Material Cost Per Ton	Cost Per Lane Mile Per Season
Sodium Chloride	$20–$40	$6,371–$6,909
Calcium Chloride	$200	$6,977–$7,529
Calcium Magnesium Acetate (CMA)	$650–$675	$12,958–$16,319
CG-90 Surface Saver	$185	$5,931–$6,148

References

Bay Area Stormwater Management Agencies Association (BASMAA). 1995. *Blueprint for a Clean Bay: Best Management Practices to Prevent Stormwater Pollution from Construction-Related Sites*. Bay Area Stormwater Management Agencies Association, Oakland, CA.

Camp Dresser & McKee et al. 1993. *California Storm Water Municipal Best Management Practice Handbook.* Stormwater Quality Task Force, Sacramento, CA.

Caraco, D., and R. Claytor. 1997. *Stormwater BMP Design Supplement for Cold Climates.* Center for Watershed Protection, Ellicott City, MD.

Ohrel, R. 1995. Rating Deicing Agents—Road Salt Stands Firm. *Watershed Protection Techniques* Vol 1, No 4. pp. 217–220.

Ohrel, R. 1995. Choosing Appropriate Vegetation for Salt-Impacted Roadways. *Watershed Protection Techniques* Vol 1, No 4. pp. 221–223.

Virginia Department of Transportation. 2000. *Springfield Interchange Current Construction.* [http://www.springfieldinterchange.com]. Accessed January 2001.

USEPA. 1993. Guidance Specifying Management Measures for Sources of Nonpoint Pollution in Coastal Waters. U.S. Environmental Protection Agency, Office of Water, Washington, DC.

Septic System Controls

Pollution Prevention/Good Housekeeping for Municipal Operations

Description

Septic system source control refers to the use of outreach programs to educate homeowners about the proper operation and maintenance of their septic systems to reduce the likelihood of failure. Septic systems are designed to treat wastewater by separating solids from liquids and then draining the liquid into the ground. Sewage flows into the tank where settling and bacterial decomposition of larger particles takes place, while treated liquid filters into the soil. When system failures occur, untreated wastewater and sewage can be introduced into ground water or nearby streams and water bodies.

Workers test a drain field (Source: Texas A&M University, 1996)

Pollution prevention practices are designed to restrict pollutant and nutrient loads from improperly functioning septic systems from entering local water sources. These loadings occur for a number of reasons, including improper siting, inadequate installation, or system operation failures (see Failing Septic Systems fact sheet). As many as 75 percent of all system failures have been attributed to hydraulic overloading (Jarrett et al., 1985). Failures may also occur due to lapses in the regular inspection and maintenance that are required to ensure proper operation during the design life of the septic system. Homeowners may be unaware of the age of their system and whether preemptive planning is necessary before the system fails.

Applicability

Outreach regarding septic systems controls is applicable for large lot development in rural areas that are not served by sewer. When septic systems are used for wastewater treatment, there is a need for educational outreach and training to avoid system failures for owners of both new and existing systems. Septic system maintenance education is extremely important in coastal areas for shoreline development near shellfish beds and spawning areas, where septic effluent discharges can influence water quality and lead to bed closures and algal blooms. There is also a significant need for educational outreach regarding septic system maintenance near lake shoreline developments, where nitrogen inputs can lead to lake eutrophication.

Implementation

The most effective way to control on-site wastewater problems is through a comprehensive management program. An onsite wastewater management program can reduce water quality degradation and save local governments and homeowners time and money, as well as better tracking of the performance of routine maintenance practices. This comprehensive plan is administered by one agency that has ultimate responsibility for all aspects of wastewater management, including on-site disposal systems. (see Failing Septic Systems fact sheet).

Public outreach and training are vital elements in the control of septic system failure. Many of the problems associated with improper septic system functioning may be attributed to a lack of homeowner knowledge of operation and maintenance of the system. Educational materials for homeowners and training courses for installers and inspectors can reduce the incidence of failure. Education is most effective when used in concert with other source reduction practices, such as phosphate bans and use of low-volume plumbing fixtures. Simple messages that can be conveyed to homeowners to reduce system failures and ensure proper functioning include

- Do not wait until septic system shows sign of failure. Inspect the system annually and have it pumped-out at least once every 3 years.
- Keep records of pumping and maintenance and a map of the location of your system and drainfield.
- Practice water conservation indoors and divert roof drains and surface water away from the system.
- Use caution in disposing materials down the drain. Household chemicals can kill the bacteria that make the system work and nondegradable materials (cigarette butts, etc.) can clog the system.
- Keep heavy equipment and vehicles off your system and drainfield.
- Don't cover your drainfield with impermeable surfaces that can block evaporation and the air needed for effluent treatment.

In addition to the general suggestions above, there are other management measures which can be implemented to help maintain a properly operating system. These measures include the following:

Chemical Additive Restrictions

Organic solvents are often advertised for use as septic system cleaners. Little evidence shows that such cleaners perform any useful functions, and they might instead exterminate the microbes necessary for waste treatment, resulting in increased discharge of pollutants. In addition, the chemicals themselves often contain constituents that are listed with U.S. EPA as priority pollutants. Restrictions on the use of these additives can prevent improper system operation and ground water contamination (USEPA, 1993).

Phosphorus Detergent Restrictions

Conventional septic systems are usually very effective at removing phosphorus (see the Failing Septic Systems fact sheet). However, certain soil conditions combined with proximity to sensitive surface waters can result in phosphorus pollutant loading. If such conditions are sufficiently prevalent within areas of concern, restrictions or bans on the use of detergents containing phosphate can be implemented. Eliminating phosphates from detergent can reduce phosphorus loads to septic systems by 40 to 50 percent (USEPA, 1993). As of October 1993, 17 states had enacted phosphate detergent restrictions or bans (Osmond et al, 1995).

Elimination of Garbage Disposals for Households Served by Septic System

Garbage disposals contribute to the loading of suspended solids, nutrients, and biological oxygen demand (BOD) to septic systems, as well as increasing the buildup of solids in septic tanks. Garbage disposals can double the amount of solids added to a septic tank, creating the need for more frequent pumpouts.

Proper Septic System Maintenance

Depending on soil conditions and other factors, septic systems have a failure rate of 5 to 35 percent. When they fail, septic systems can discharge untreated or partially treated wastewater into groundwater. As a result, it is important to ensure that septic systems are maintained and operating properly. This can be accomplished by homeowners or trained inspectors through regular inspections of onsite systems. During inspections, the holding or septic tank should be checked to determine whether or not pumping is necessary. Additionally, the inspection port should be opened and the baffles checked to ensure that they have not been damaged since the last inspection. The absorption field should also be checked for flooding or sogginess, which are indicators of a clogged system or excessive water use. Finally, the entire area should be checked for odors or damp or soggy areas, which are indicative of a leak in the system.

The holding tank should be pumped regularly, with the frequency depending on the capacity of the tank, the flow of wastewater, and the volume of solids in the tank. First, a tank's capacity might become too small if new high-water-use technologies such as a hot tub or whirlpool are installed, or if more people move into the house than when the system was originally installed. Second, when more people move into a house, the wastewater flow will increase, requiring more frequent pumping. Finally, if the house has a garbage disposal or if the occupation of someone in the household results in their having excessively soiled clothing, the volume of solids entering the tank might be greater than usual and require more frequent pumping. These factors should be accounted for when determining how frequently to pump a septic tank.

Table 2 lists estimates of how frequently septic tanks should be pumped on average, based on the size of the tank and household size (NSFC). These values were calculated assuming there was no garbage disposal, which can increase solids by up to 50 percent. Individuals can determine specifically when the holding tank should be pumped by occasionally checking the depth of solids and the level of scum built up on top of the water in the tank. As this can be an unpleasant chore, it is best to have the tank routinely pumped by a certified contractor approximately every 3 years.

Limitations

As with all pollution prevention measures, public ignorance about the suggested practices may be the biggest limitation to septic system source control. Many residents appear to be either unaware of or unwilling to implement the necessary steps to ensure the proper operation and maintenance of their septic systems. A recent survey of residents in the Chesapeake Bay region found that 50 percent of septic owners had not had their systems inspected within the last 3 years and that 46 percent had not had their system cleaned within the same time frame (Swann, 1999). Twelve percent of residents did not even know where their septic system was located. This finding indicates that residents are not receiving the necessary information on septic system care to prevent or reduce the incidence of failure.

Table 2. Estimated septic tank pumping frequencies in years

Tank Size (gallons)	Household Size (number of people)					
	1	**2**	**3**	**4**	**5**	**6**
500	5.8	2.6	1.3	1.0	0.7	0.4
750	9.1	4.2	2.6	1.8	1.3	1.0
900	11.0	5.2	3.3	2.3	1.7	1.3
1,000	12.4	5.9	3.7	2.6	2.0	1.3
1,250	15.6	7.5	4.8	3.4	2.6	2.0
1,500	18.9	9.1	5.9	4.2	3.3	2.6
1,750	22.1	10.7	6.9	5.0	3.9	3.1
2,000	25.4	12.4	8.0	5.9	4.5	3.7
2,250	28.6	14.0	9.1	6.7	5.2	4.2
2,500	31.9	15.6	10.2	7.5	5.9	4.8

Effectiveness

Failing septic systems have been linked to water quality problems in streams, lakes, shellfish beds, and coastal areas. Improvements in system operation and maintenance should be a strong element in watershed plans for those areas where septic systems are used for wastewater treatment. Public education and outreach regarding septic system operation and maintenance can be assumed to produce some positive effect on water quality, but studies on resident behaviors regarding septic pollution prevention practices are limited. Instead, effectiveness of septic source controls is most often measured in the number of informational packets mailed out or the number of attendees for training workshops.

While this may help to define the demand for information, it gives no indication of whether the operation and maintenance practices presented are implemented. To better determine whether pollution prevention outreach is being effective, residential surveys should be part of any program seeking to educate residents on septic systems and their influence on water quality.

Cost Considerations

The cost of septic system pollution prevention programs can vary greatly, depending on factors such as staff time, outreach components, and the extent of septic use within a region. Table 3 provides some examples of programs from various parts of the country and the expenditures for septic outreach.

Once a program is well established, the cost of creating educational materials and training programs decreases and funding can be redistributed to those outreach techniques that have proven to be the most successful. Programs should be sure to secure some funding for media outreach (especially television), as this often ranks as the most popular information source in surveys of resident preferences.

Table 3. Some examples of cost and staff time for septic outreach programs

Program	Expenditure	Staff time (Full time equivalent)	Components
City of Olympia, Washington	$40,000	0.5	• Flyers/brochures • Training workshops • System monitoring
Thurston County, Washington	$35,000	0.5	• Flyer/brochures • Discount coupons for septic pumping • Training workshops
Minnesota Cooperative Extension	$18,000	0.25	• Publications/videos • Flyers/brochures • Training Workshops/community Visits • Septic owners guide distributed with new permits • Satellite conferences for policy makers • Train the trainers program

References

Maine Department of Environmental Protection. No Date. *Septic Systems: How they work and How to Keep them Working.* Maine DEP, Augusta, ME.

Matuszeski, W. 1997. Notes from Bayside: Even at their best, septic systems are bad for the Bay. *Bay Journal* 7(1).

New Jersey Department of Environmental Protection and Energy. 1992. *Ground Water Protection Practices for Septic Systems*. Trenton, NJ.

NSFC. No Date. *So Now You Own a Septic Tank.* National Small Flows Clearinghouse, West Virginia University, Department of Technology Education, Morgantown, WV.

NSFC. No Date. *The Care and Feeding of Your Septic Tank.* National Small Flows Clearinghouse. West Virginia University, Department of Technology Education, Morgantown, WV.

Ohrel, R. 1995. Dealing with Septic System Impacts. *Watershed Protection Techniques* 2(1): 265-272.

Osmond, D.L., D.E. Line, J.A. Gale, R.W. Gannon, C.B. Knott, K.A. Bartenhagen, M.H. Turner, S.W. Coffey, J. Spooner, J. Wells, J.C. Walker, L.L. Hargrove, M.A. Foster, P.D. Robillard, and D.W. Lehning. 1995. *WATERSHEDS: Water, Soil and Hydro-Environmental Decision Support System*. North Carolina State University Water Quality Group, Raleigh, NC.

Olson, K., D. Gustafson, B. Liukkonen, and V. Cook. 1997. *Septic System Owner's Guide.* Minnesota Extension Service, University of Minnesota, St. Paul, MN.

Swann, C. 1999. *A Survey of Residential Nutrient Behavior in the Chesapeake Bay*. Center for Watershed Protection, Ellicott City, MD.

Texas A&M University. 1996. *Texas A&M-El Paso, UTEP Researchers Use High Tech Methods to Assess Contamination from On-Site Systems.* [http://twri.tamu.edu/twripubs/Insights/v5n2/article-5.html]. Accessed January 2001.

University of Nevada Cooperative Extension. 1992. *Understanding Your Septic System*. Reno, NV.

University of Washington Extension and Soil Conservation Service. 1992. Venturing Beyond the Flush: Septic Systems and Water Quality. *The Water Spot*, December 1992.

Storm Drain System Cleaning

Pollution Prevention/Good Housekeeping for Municipal Operations

Description

Storm drain systems need to be cleaned regularly. Routine cleaning reduces the amount of pollutants, trash, and debris both in the storm drain system and in receiving waters. Clogged drains and storm drain inlets can cause the drains to overflow, leading to increased erosion (Livingston et al., 1997). Benefits of cleaning include increased dissolved oxygen, reduced levels of bacteria, and support of instream habitat. Areas with relatively flat grades or low flows should be given special attention because they rarely achieve high enough flows to flush themselves (Ferguson et al., 1997).

Municipalities can hire professional plumbing services to remove trapped sediment and debris from storm drains with periodical flushing (Source: Drain Patrol, no date)

Applicability

This measure is applicable to all storm drain systems. The same principles can be applied to material and waste handling areas, paved and vegetated areas, waterways, and new development projects (Ferguson et al., 1997).

Limitations

While cleaning is necessary for all storm drain systems, there are limitations (adapted from Ferguson et al., 1997) as follows:

- Cleaning the storm drain by flushing is more successful for pipes smaller than 36 inches in diameter.
- A water source is necessary for cleaning. The wastewater must be collected and treated once flushed through the system.
- Depending on the condition of the wastewater, it may or may not be disposed to sanitary sewer systems.
- The efficiency of storm system flushing decreases when the length of sewer line being cleaned exceeds 700 feet.

Maintenance Considerations

Ferguson et al. (1997) report removal of 55 to 65 percent for nonorganic materials and grits and 65 to 75 percent for organics.

Cost Considerations

The cost of a vactor truck can range from $175,000 to $200,000, and labor rates range from $125 to $175 per hour (Ferguson et al., 1997). Ferguson et al. (1997) also cited costs of $1.00 to $2.00 per foot for storm drain system cleaning.

References

Drain Patrol. No date. *Services*. [www.drainpatrol.com/pages/services.html]. Accessed January 2001.

Ferguson, T., R. Gignac, M. Stoffan, A. Ibrahim, and H. Aldrich. 1997. *Rouge River National Wet Weather Demonstration Project Cost Estimating Guidelines: Best Management Practices and Engineered Controls*. Rouge River National Wet Weather Demonstration Project, Wayne County, MI.

Livingston, E., E. Shaver, and J.J. Skupien. 1997. *Operation, Maintenance, & Management of Stormwater Management Systems*. Watershed Management Institute, Inc. Ingleside, MD

Alternative Discharge Options for Chlorinated Water

Pollution Prevention/Good Housekeeping for Municipal Operations

Description

Chlorinated water discharged to surface waters has an adverse impact on local water quality. Swimming pools are a major source of chlorinated water discharged into sanitary and storm sewer systems. An average swimming pool holds 19,000 gallons of chlorinated water. Pools have high concentrations of chlorine, which is toxic to wildlife and fish.

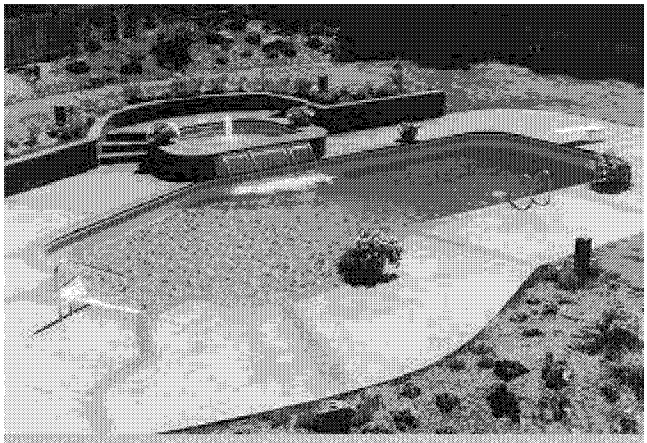

Chlorinated water from swimming pools should not discharged to the storm sewer system or directly into a waterbody (Source: The Pool Guy, 2001)

Applicability

Many pool owners who live in cooler climates drain their swimming pools to reduce maintenance and potential damage from freezing during harsh winters. These individuals should not discharge pool water to the storm sewer system or directly into a waterbody and should investigate alternative discharge options.

Siting and Design Considerations

The Oregon Department of Environmental Quality suggests that

- Pool owners obtain permission from local sanitary sewer operators or municipal treatment plant operators and discharge to the sanitary sewer system.
- Discharge the chlorinated water to land, where it will not drain to local surface waters.
- Dechlorinate the water before draining the pool.

Montgomery County, Maryland's, Department of Environmental Protection (1997) provides the following guidelines to pool owners and operators:

- Community pools must discharge to the sanitary sewer using a surge tank.
- Residential pools must discharge backwash water to the sanitary sewer.
- If the only option for draining pool water is to discharge directly into the environment, water quality must comply with the applicable water quality criteria.
- Pool water must sit for at least 2 days after the addition of chlorine or bromine or until chlorine or bromine levels are below 0.1 mg/l.
- The pH of discharge water must be between 6.5 and 8.5 before it is discharged.
- Algicides such as copper or silver can interrupt normal algal and plant growth and should not be used.

- Total suspended solids must be below 60 mg/l—suspended particles should be allowed to settle out and the water should not appear murky. Settled material should not be discharged with pool water.
- Discharges to the environment should be directed over a land surface so that some level of filtration by soil particles can occur. The above water quality requirements also apply to land-applied water.

Limitations

Enforcement of safe discharge of chlorinated water may be difficult to achieve.

References

MCDEP. 1997. Montgomery County NPDES Municipal Separate Storm Sewer System Annual Report. MS-MO-95-006. Montgomery County Department of Environmental Protection, Rockville, MD.

Oregon Department of Environmental Quality (ODEQ). 1997. *Environmentally Safe Methods for Draining Swimming Pools*. News release. [http://www.deq.state.or.us/news/releases/archived/swimpool.htm]. Last updated October 1, 1997. Accessed June 1, 2001.

The Pool Guy. 2001. *The Pool Guy's Homepage*. [www.geocities.com/Athens/8205/]. Accessed January 2001.

Materials management

Alternative Products

Pollution Prevention/Good Housekeeping for Municipal Operations

Description

Using alternatives to toxic substances drastically reduces their presence in storm water and receiving waters. The most common toxic substances found in the home are cleaners, automotive products, and pesticides. Fertilizers, paints, and fuels are among other common hazardous substances frequently found in ground water because of improper disposal (WEF and ASCE, 1998).

Examples of alternative products include rechargeable batteries, baking soda, olive oil, vegetable oil, a lemon, a toothbrush, and a rag

Applicability

The promotion of safer alternative products should be coupled with other programs designed to reduce the presence of hazardous or toxic materials in homes and storm water runoff. Examples of such programs are hazardous materials collection, good housekeeping or material management practices, oil and automotive waste recycling, and spill response and prevention (WEF and ASCE, 1998).

Examples of commonly used products and safer alternatives are as follows (adapted from Washington State Department of Ecology):

- *Aerosols*. Pump-type or non-aerosol products should be used.
- *Art supplies*. One should purchase water-based paints or inks. They should not contain lead or other toxic materials.
- *Batteries*. Rechargeable batteries are a cost-effective alternative to disposable batteries.
- *Chemical fertilizers*. Composting yard clippings and food scraps is an option. Manure (in measured amounts) is another alternative to chemical fertilizers.
- *Gasoline*. Not driving at all is the best way to reduce gasoline use. Purchasing a super-efficient or electric vehicle is the next best alternative. Carpooling, walking, bicycling, and public transportation are other viable options.
- *Household cleaners and detergents*. Baking soda is an excellent cleanser with mild abrasive power that can be used in lieu of heavy-duty cleansers. A mixture of 1 quart water and 2 tablespoons of vinegar can be used as a window cleaner. Three parts olive oil mixed with one part white vinegar can be used for a wood cleanser. Borax and lemon juice make an excellent toilet cleaner. Many other non- or less-toxic alternatives to harsh cleansers exist. A listing of these alternatives can be found at *www.healthdept.co.pierce.wa.us/sourceprotection/alter.html*.

- *Motor Oil*. Re-refined motor oil should be used. Doing so will spur the market for recycled motor oil and decrease reliance on new oil supplies.
- *Pesticides*. Keeping homes and gardens free from food and breeding areas for insect pests prevents the need for pesticides. Onion, garlic, and marigold plants help keep garden pests at bay.

Implementation

One of the best ways to encourage homeowners to switch to alternatives to potentially harmful products is to educate them (see Proper Disposal of Household Hazardous Wastes fact sheet). Municipalities can compile a list of alternative products and post it on their web site, publish it in a newsletter, include it as an insert in a utility bill, or produce magnets or other household products with a select list of nonhazardous alternatives. Municipalities might choose to include commercially available products that have been shown to be "green" alternatives to harsh chemicals.

Limitations

In some cases, alternative products may not be readily available. In addition, cost can be a limiting factor. For example, until recently, environmentally friendly de-icing materials for roads were significantly more expensive than traditional salt (Babcock 1998). Effectiveness of alternatives may be an issue.

The biggest impediment to instituting widespread use of alternative products is public awareness. Municipal staff must convince people to change old habits or to try new products.

Effectiveness

The use of alternative products prevents their hazardous waste counterparts from being disposed of improperly and contaminating storm water.

Cost Considerations

The majority of the cost for this BMP is composed of staff hours. An alternative products campaign should be instituted in conjunction with other public awareness programs; therefore, municipalities should not experience significant cost increases.

References

Babcock, Charles R. 1998, April 27. Slick Hill Work by De-Icer Entrepreneur. *Washington Post*, A15.

Tacoma-Pierce County Health Department. 2001. *Household Hazardous Wastes: Less Toxic Alternatives for Cleaning*. Tacoma-Pierce County Health Department, Tacoma, WA. [http://www.healthdept.co.pierce.wa.us/sourceprotection/alter.html]. Last updated February 26, 2001. Accessed June 1, 2001.

Washington State Department of Ecology. *Turning the Tide on Toxics in the Home: A Guide to Safer Alternatives and Proper Disposal of Hazardous Household Products*.

Water Environment Federation (WEF)and the American Society of Civil Engineers (ASCE). 1998. *Urban Runoff Quality Management*. WEF Manual of Practice No. 23 and ASCE Manual and Report on Engineering Practice No. 87. WEF Water Quality and Ecology Subcommittee of the Technical Practice Committee and The Urban Water Resources Research Council of the American Society of Civil Engineers, Alexandria and Reston, VA.

Hazardous Materials Storage

Pollution Prevention/Good Housekeeping for Municipal Operations

Description

Failure to properly store hazardous materials dramatically increases the probability that they will end up in local waterways. Many people have hazardous chemicals stored throughout their homes, especially in garages and storage sheds. Practices such as covering hazardous materials or even storing them properly, can have dramatic impacts.

Signs on hazardous material storage containers indicate the dangers associated with each substance

Applicability

Hazardous material storage is relevant to both urban and rural settings and all geographic regions. The effects of hazardous material leakage may be more pronounced in areas with heavier rainfall, due to the greater volume of runoff.

Siting and Design Considerations

EPA (1992) has outlined some management considerations for hazardous materials. They are as follows:

- Ensuring sufficient aisle space to provide access for inspections and to improve the ease of material transport.
- Storing materials well away from high-traffic areas to reduce the likelihood of accidents that might cause spills or damage to drums, bags, or containers.
- Stacking containers in accordance with the manufacturers' directions to avoid damaging the container or the product itself.
- Storing containers on pallets or equivalent structures. This facilitates inspection for leaks and prevents the containers from coming into contact with wet floors, which can cause corrosion. This consideration also reduces the incidence of damage by pests (insects, rodents, etc.).
- Delegating the responsibility for management of hazardous materials to personnel trained and experienced in hazardous substance management.

Covering hazardous materials and areas where such materials are handled reduces potential contact with storm water and wind. Storage areas, outdoor material deposits, loading and unloading areas, and raw materials should all be covered or enclosed. Priority should be given to locations of the most hazardous substances (USEPA 1992).

Residents waiting to dispose of their household hazardous waste should store it properly until their hazardous waste collection day (Kopel,1998). One storage technique requires a plastic container with a lid (e.g., a 5-gallon bucket). The container should be filled halfway with (unused) kitty litter. The hazardous substance in its own original container should be put into the kitty litter-filled plastic bucket. The bucket lid should be fastened, and the contained marked clearly, kept far away from children, and anyone else who might ingest it. Corrosion will be reduced if the container is stored on a shelf, rather than on a concrete or dirt floor.

Limitations

The lifespan of the cover or structure must be taken into account, depending on the hazardous nature of the stored materials. Tarpaulins and plastic sheets may not last in certain types of climatic conditions. If a roof or other structure is required, the lifespan will increase. Any storage facility must meet local fire and building codes (Ferguson, et al. 1997).

Maintenance Considerations

Maintenance of hazardous material storage areas consists mostly of inspection and employee training (Ferguson, et al. 1997). Storage spaces and containers should be routinely inspected for leaks, signs of cracks or deterioration, or any other signs of release.

Effectiveness

Improved storage of hazardous materials is effective at reducing contamination of storm water runoff and receiving waters if proper storage and maintenance techniques are used.

Cost Considerations

Estimates of costs for storing and covering materials vary depending on the substance and type of operation. Ferguson et al. (1997) estimated the costs of a pre-fabricated building at \$6 to \$11 per ft^2, and the cost of a 6-inch thick concrete slab at \$3.50 to \$5.00 per ft^2. All hazardous materials should be protected from exposure to storm water regardless of the expense. To offset the cost of covering or enclosing hazardous materials, consider changing procurement, inventory, and disposal practices to minimize the amount of materials stored onsite.

References

Ferguson, T., R. Gigac, M. Stoffan, A. Ibrahim, and H. Aldrich. 1997. *Rouge River National Wet Weather Demonstration Project*. Wayne County, MI.

Kopel, D. 1998. *Household Hazardous Waste*. Independence Institute, Golden CO. [i2i.org/SuptDocs/Enviro/enhhw.htm] accessed on 10/5/99.

USEPA. 1992. *Storm Water Management for Industrial Activities*. U.S. Environmental Protection Agency, Office of Water, Washington, D.C.

Road Salt Application and Storage

Pollution Prevention/Good Housekeeping for Municipal Operations

Description

The application and storage of deicing materials, most commonly salts such as sodium chloride, can lead to water quality problems for surrounding areas (Koppelman et al., 1984). Salts, gravel, sand, and other materials are applied to highways and roads to reduce the amount of ice during winter storm events. Salts lower the melting point of ice, allowing roadways to stay free of ice buildup during cold winters. Sand and gravel increase traction on the road, making travel safer.

During storage, road salt should be covered to prevent salt from lumping together or being lost with storm water runoff

Applicability

This practice is applicable to areas that receive snowfall in winter months and require deicing materials. Municipalities in these areas must ensure proper storage and application for equipment and materials.

Siting and Design Considerations

Many of the problems associated with contamination of local waterways stem from the improper storage of deicing materials (Koppelman et al., 1984). Salts are very soluble when they come into contact with storm water. They can migrate into ground water used for public water supplies and also contaminate surface waters.

More information about road deicing materials can be found at the American Association of State Highway and Transportation Officials web page at *www.transportation.org/aashto/home.nsf/FrontPage*.

Limitations

Road salt is the least expensive material for deicing operations; however, once the full social costs are taken into account, alternative products and better management and application of salts become increasingly attractive options.

Maintenance Considerations

Covering stored road salts may be costly; however, the benefits are greater than the perceived costs. Storing road salts correctly prevents the salt from lumping together, which makes it easier to load and apply. In addition, covering salt storage piles reduces salt loss from storm water runoff and potential contamination to streams, aquifers, and estuarine areas. Salt storage piles should be located outside the 100-year floodplain for further protection against surface water contamination.

During road salt application, certain best management practices can produce significant environmental benefits. The amount of road salt applied should be regulated to prevent oversalting of motorways and increasing runoff concentrations. The amount of salt applied should be varied to reflect site-specific characteristics, such as road width and design, traffic concentration, and proximity to surface waters. Calibration devices for spreaders in trucks aid maintenance workers in the proper application of road salts. Alternative materials, such as sand or gravel, should be used in especially sensitive areas.

References

American Association of State Highway and Transportation Officials. 2000. *AASHTO: Transportation Center of Excellence.* [www.transportation.org/aashto/home.nsf/FrontPage]. Accessed April 10, 2001.

USEPA. 1995. *Planning Considerations for Roads, Highways and Bridges*. U.S. Environmental Protection Agency, Office of Water, Washington, DC. [www.epa.gov/OWOW/NPS/education/planroad.html].

Koppelman, L.E., E. Tanenbaum, and C. Swick. 1984. *Nonpoint Source Management Handbook.* Long Island Regional Planning Board, Hauppauge, NY.

Spill Response and Prevention

Pollution Prevention/Good Housekeeping for Municipal Operations

Description

Spill response and prevention plans should clearly state measures to stop the source of a spill, contain the spill, clean up the spill, dispose of contaminated materials, and train personnel to prevent and control future spills.

A person works to prevent a spill from entering a storm sewer (DAWG, 2000)

Applicability

Spill prevention and control plans are applicable to construction sites where hazardous wastes are stored or used. Hazardous wastes include pesticides, paints, cleaners, petroleum products, fertilizers, and solvents.

Siting and Design Considerations

Identify potential spill or source areas, such as loading and unloading, storage, and processing areas, places where dust or particulate matter is generated, and areas designated for waste disposal. Also, spill potential should be evaluated for stationary facilities, including manufacturing areas, warehouses, service stations, parking lots, and access roads.

Material handling procedures and storage requirements should be defined and actions taken to reduce spill potential and impacts on storm water quality. This can be achieved by

- Recycling, reclaiming, or reusing process materials, thereby reducing the amount of process materials that are brought into the facility
- Installing leak detection devices, overflow controls, and diversion berms
- Disconnecting any drains from processing areas that lead to the storm sewer
- Performing preventative maintenance on storm tanks, valves, pumps, pipes, and other equipment
- Using material transfer procedures or filling procedures for tanks and other equipment that minimize spills
- Substituting less- or non-toxic materials for toxic materials.

Provide documentation of spill response equipment and procedures to be used, ensuring that procedures are clear and concise. Give step-by-step instructions for the response to spills at a particular facility. This spill response plan can be presented as a procedural handbook or a sign.

The spill response plan should

- Identify individuals responsible for implementing the plan
- Define safety measures to be taken with each kind of waste
- Specify how to notify appropriate authorities, such as police and fire departments, hospitals, or publicly-owned treatment works for assistance
- State procedures for containing, diverting, isolating, and cleaning up the spill
- Describe spill response equipment to be used, including safety and cleanup equipment.

Education is essential for reducing spills. By informing people of actions they can take to reduce spill potential, spills will be reduced and/or prevented. Some municipalities have set up 1-800 numbers for citizens to call in the event of spills. This is helpful for ensuring that spills are cleaned up in a safe, proper, and timely manner.

Limitations

A spill prevention and control plan must be well planned and clearly defined so that the likelihood of accidental spills can be reduced and any spills that do occur can be dealt with quickly and effectively. Training might be necessary to ensure that all workers are knowledgeable enough to follow procedures. Equipment and materials for cleanup must be readily accessible and clearly marked for workers to be able to follow procedures.

Maintenance Considerations

Update the spill prevention and control plan to accommodate any changes in the site or procedures. Regularly inspect areas where spills might occur to ensure that procedures are posted and cleanup equipment is readily available.

Effectiveness

A spill prevention and control plan can be highly effective at reducing the risk of surface and ground water contamination. However, the plan's effectiveness is enhanced by worker training, availability of materials and equipment for cleanup, and extra time spent by management to ensure that procedures are followed.

Cost Considerations

Spill prevention and control plans are inexpensive to implement. However, extra time is needed to properly handle and dispose of spills, which results in increased labor costs.

References

DAWG. 2000. *Flexible SpillBerm For Quick Spill Containment.* http://www.dawginc.com/cgi-bin/public/director.cgi?CODE=9791556921446&LINK=/products/prod_16.htm. Accessed January 2001.

USEPA. 1992. *Storm Water Management for Construction Activities: Developing Pollution Prevention Plans and Best Management Practices.* EPA 832-R-92-005. U.S. Environmental Protection Agency, Office of Water, Washington, DC.

USEPA. 1992. *Storm Water Management for Industrial Activities: Developing Pollution Prevention Plans and Best Management Practices.* EPA 832-R-92-006. U.S. Environmental Protection Agency, Office of Water, Washington, DC.

Used Oil Recycling

Pollution Prevention/Good Housekeeping for Municipal Operations

Description

Used motor oil is a hazardous waste because it contains heavy metals picked up from the engine during use. Fortunately, it is recyclable because it becomes dirty from use, rather than actually wearing out. However, as motor oil is toxic to humans, wildlife, and plants, it should be disposed of at a local recycling or disposal facility. Before disposal, used motor oil should be stored in a plastic or metal container with a secure lid, rather than dumped in a landfill or down the drain. Containers that previously stored household chemicals, such as bleach, gasoline, paint, or solvents should not be used. Used motor oil should also never be mixed with other substances such as antifreeze, pesticides, or paint stripper.

Used oil can be disposed of at a waste collection facility, where it will be collected and later sent to a recycling facility

Used motor oil is recycled in a number of different ways. It can be *reprocessed* into fuel for heating and cooling homes. Reprocessing is the most common method of recycling used oil in the United States. Approximately 750 million gallons of used oil are reprocessed every year and marketed to asphalt plants, steel mills, boilers, pulp and paper mills, cement/lime kilns, and a number of other places. Motor oil can also be burned in furnaces for heat or in power plants to generate electricity for homes, businesses, or schools. It can also be blended for marine fuels, mixed with asphalts for paving, or be used in industrial burners. Used motor oil can also be used in specially designed municipal garages, space heaters, and automotive bays. Finally, used motor oil can be re-refined into lubricating oils that meet the same standards as virgin/new oil. All of these methods of recycling help to conserve valuable energy resources.

When establishing oil recycling programs, municipalities should provide the public with the proper informational resources. Programs should encourage the public to contact local service stations, municipal governments, the county government office, or the local environmental or health departments, if they are unsure where to safely dispose of their oil. The public can also call 1-800-RECYCLE or contact Earth's 911 at *www.1800cleanup.org/* for more information. Finally, state government contacts, who might be able to provide information about oil recycling, can be obtained by the public at *www.noraoil.com/Contact/contact.html*.

Municipalities also need to address oil filter recycling in their recycling programs. Programs should encourage the public to check with local collection facilities to determine whether oil filters are recycled locally. The Filter Manufacturers Council, which was established in 1971 to monitor regulatory and technological developments that affect the oil industry, can also be used as a resource for the public. The Council operates a hotline (1-800-99-FILTER) and a web site (*www.filtercouncil.org/*) to provide information about state regulations and companies that transport, recycle, and process used oil filters. If oil filters are not recycled locally, empty filters should be wrapped in newspaper and disposed of with regular household waste. Oil filters must always be drained of oil, whether recycling or disposing of the filter. The public should also check with trash collectors to determine if their state permits disposal of oil filters in landfills.

Applicability

Motorists that have their oil changed can be classified as a do-it-yourselfer or a do-it-for-me. Do-it-yourselfers change their own oil because they want to save money, they enjoy it, or they take pride in the quality of their own workmanship. According to a recent survey, more than 30 percent of motorists change their own oil. Between 43 and 62 million gallons of used oil were collected and recycled by do-it-yourselfers in 1997 (API, 2000). Therefore, it is important that do-it-yourselfers recycle their used oil. Do-it-for-mes have their oil changed at places such as service stations or quick lubes; they should be sure to check if their mechanic recycles motor oil.

To make recycling motor oil more convenient for the do-it-yourselfers, oil recycling programs should be located throughout all communities. Although oil recycling programs are appropriate in any community, urban areas are in particular need of programs, as more motor oil is used in these areas to maintain a larger number of vehicles. Therefore, oil recycling programs should more heavily target urban areas and provide a greater number of facilities for recycling oil in these areas.

Implementation

Oil recycling programs can be implemented easily throughout the country. Two types of programs currently in use are drop-off locations and curbside collection. Drop-off locations include service stations, recycling centers, auto parts retail stores, quick lubes, and landfills. These locations are effective because they are familiar, convenient, permanent, and well located. Additionally, sites that are permanent allow for effective publicity for recycling programs. Curbside collection programs allow consumers to put their oil out on the curb for collection, as they already do with their other recycling and trash. While this program is more convenient for the user, it requires a hauler to come and collect the oil. Oil recycling programs that use drop-off locations for collection are implemented by local governments, state governments, service stations, quick lubes, auto parts retailers, oil processors, or any combination of the above. Curbside collection programs are implemented by municipal or private waste haulers, municipal or private recycling haulers, or a combination of any of the above.

Local Recycling Programs. Many states, cities, and communities have developed their own recycling programs. For example, the California Integrated Waste Management Board sponsors a used oil recycling program that develops and promotes alternatives to illegal oil disposal. This is accomplished through a statewide network of collection opportunities and outreach efforts that publicize and encourage used oil recycling.

The program provides useful information for the public, including collection locations, certification information, proposed regulations, used oil facts, and a number of other resources. More information about this program can be found at *www.ciwmb.ca.gov/usedoil/Default.htm*. Other cities with used oil programs are King County, Washington; Kansas City, Missouri; Clark County, Ohio; and New Carollton, Maryland. All of these programs can be used as models for other communities to develop their own programs.

National Recycling Programs. In 1991, the American Petroleum Institute (API) established a used oil collection and recycling program. This program works to educate the public about collecting and recycling used oil, making oil collection more convenient, and ensuring that this valuable resource is handled appropriately. Information about API's Used Motor Oil Program is available at *www.recycleoil.org*. API has also developed model legislation, based on Florida's program, to encourage collection and recycling of used oil. Florida's legislation specifically requires states to create a special fund to help cities and towns establish used oil collection facilities. Additionally, it emphasizes the importance of educating the public about oil recycling. Guidance for developing collection programs, in the form of API's model legislation as well as guidebooks and publications, can be found at *www.recycleoil.org/legislative.htm*.

Benefits

Recycling used motor oil is beneficial to the environment, the public health, and the economy. If oil is improperly disposed of in landfills, ditches, or waterways or dumped on the ground or down storm sewers, it can migrate into surface and ground water. It takes only one gallon of oil to contaminate one million gallons of drinking water (USEPA, 2000). This same oil can also seriously harm aquatic plants and animals. Submerged vegetation is especially affected by oil because the oil blocks sunlight from entering the water and hinders photosynthesis. As motor oil causes 40 percent of the pollution in America's waterways (Mississippi DEQ), water pollution could dramatically decrease if that same oil was recycled.

It is also beneficial to recycle motor oil because one gallon of re-refined oil produces 2.5 quarts of lubricating oil, while 42 gallons of crude oil are necessary to produce this same amount. It also takes three times as much energy used to refine crude oil to lubricating oil than it does to re-refine used motor oil. If the 180 million gallons of recoverable motor oil that are thrown away each year were recycled, this would produce enough energy to power 360,000 homes annually. Finally, if the 1.3 billion gallons of oil wasted each year by the United States were re-refined, it would save 1.3 million barrels of oil a day (Mississippi DEQ).

Recycling used motor oil is also beneficial in protecting public health. As oil circulates through a car's engine, it collects rust, dirt, metal particles, and a variety of contaminants. Engine heat can also break down oil additives, producing acids and a number of other substances. Exhaust gases and antifreeze can also leak into oil when the engine is in use. When any of these substances mix with oil, the toxicity of oil is greatly increased. Then, if oil is disposed of improperly and enters the water or air, public health can be seriously threatened.

Recycling used motor oil is also beneficial to the economy. Oil is a valuable resource that can be re-refined and reused in combustion engines. As oil is a non-renewable resource, it will become increasingly more difficult to find new reserves in the future. Therefore, recycling will provide time to develop alternative fuels and lessen dependence on foreign oil suppliers.

Limitations

One limitation to recycling oil is the possibility of contamination during collection. If oil is mixed with other substances or if storage containers have residues of other substances, this can contaminate oil and make it a hazardous waste. In these cases, collection facilities are responsible for disposing of this hazardous waste and abiding by appropriate rules. Another limitation is educating the public. While oil recycling programs can be effective, it is often difficult to effectively educate the public and convince them of the importance of recycling oil. This limitation can be addressed if municipalities include recycling information in utility bill inserts, newspaper ads, and mailings. A last limitation is that some might find it inconvenient to take their oil to a recycling facility. People may not have time to drive their oil to a facility or the facility may be difficult to find. When this happens, people are more likely to dispose of their oil improperly.

Effectiveness

According to a 1998 survey, 30 percent of motorists change their oil themselves. Of those people, 12 to 15 percent report that they improperly dispose of their oil. While most people claim that they put the oil in the trash, 3 to 5 percent say that they dispose of their oil in a storm drain system. Based on this survey, more than half of do-it-yourselfers improperly dispose of used motor oil. A 1994 survey reports that of the 28 percent who are do-it yourselfers, 17 percent report improper disposal. These statistics can be improved through better advertisement of recycling facilities and by making recycling more convenient for the public.

Costs

Costs for used motor oil recycling programs vary depending on whether a community has already established similar types of recycling programs. Major costs associated with oil recycling programs include advertisement costs and oil collection costs. While service stations and collection facilities often allow the public to drop off their oil free of charge, these facilities must pay a recovery service to collect and dispose of their accumulated oil. One such recovery service, US Filter, charges an annual fee of $179 for unlimited waste oil removal, or a $79 fee for one-time oil removal, from service stations, small garage owners, and other types of collection facilities. Costs for programs also vary, depending on whether oil is collected by curbside pickup or at drop-off facilities. As fees will vary, check with a local recovery service for more specific information about oil collection fees.

References

API. 2000. *Used Motor Oil Collection and Recycling: Benefits of Recycling*. American Petroleum Institute. [www.recycleoil.org/benefits_of_recycling.htm]. Accessed July 2000.

API. 2000. *Used Motor Oil Collection and Recycling: Overview of Drop-off and Curbside Used Oil Collection Programs*. American Petroleum Institute. [www.recycleoil.org/usedoil_overview.htm]. Accessed July 2000.

API. 2000. *Used Motor Oil Collection and Recycling: Starting a Collection Program*. American Petroleum Institute. [www.recycleoil.org/legislative.htm]. Accessed July 2000.

CIWMB. 2000. *Used Oil Recycling Program*. California Integrated Waste Management Board. [www.ciwmb.ca.gov/usedoil/Default.htm]. Last updated April 25, 2000. Accessed July 2000.

References (Continued).

FMC. 1998. *How to Recycle Your Filters*. Filter Manufacturers Council. [www.filtercouncil.org/index.html]. Accessed July 2000.

Gressel, A. *Technologies and Methods Available for Recycling Used Oils*. National Oil Recyclers Association. [http://www.noraoil.com/educationalresources/Tech/tech.html]. Accessed June 1, 2001.

Mississippi DEQ. No date. *Proper Disposal of Motor Oil*. Mississippi Department of Environmental Qaulity. Pollution Prevention Program, Jackson, MS.

Nebraska Cooperative Extension. 1997. *Handling Wastes: Used Oil and Antifreeze*. Nebraska Cooperative Extension NF94-196. [www.ianr.unl.edu/pubs/wastemgt/nf196.htm]. Accessed July 2000.

NORA. 2000. *Where Can I Take My Used Oil*? National Oil Recyclers Association. [www.noraoil.com/Contact/contact.html]. Accessed July 2000.

NORA. 2000. *Why Recycle*? National Oil Recyclers Association. [http://www.noraoil.com/educationalresources/educationalresources.html]. Accessed June 1, 2001.

Schueler, T., and C. Swann. 2000. *Understanding Watershed Behavior*. Watershed Protection Techniques 3(3): 671–679.

USEPA. 1994. *Collecting Used Oil for Recycling/Reuse: Tips for Consumers Who Change Their Own Motor Oil and Oil Filters*. EPA 530-F-94-008. U.S. Environmental Protection Agency, Office of Solid Waste, Washington, DC.

USEPA. 1996. *Managing Used Oil: Advice for Small Businesses*. EPA530-F-96-004. U.S. Environmental Protection Agency, Office of Solid Waste. [www.epa.gov/epaoswer/hazwaste/usedoil/usedoil.htm]. Accessed July 2000.

USEPA. 2000. *Used Oil Management Program*. U.S. Environmental Protection Agency, Office of Solid Waste. [www.epa.gov/epaoswer/hazwaste/usedoil/index.htm]. Last updated July 12, 2000. Accessed July 2000.

Washington State Department of Ecology. 1991. *Automotive Waste and the Do-It-Yourselfer: How to Reduce, Recycle and Dispose of Automotive Wasters Properly and Avoid Toxic Releases.* Publication #91-BR-12. Washington State Department of Ecology, Olympia, WA.

Materials Management

Pollution Prevention/Good Housekeeping for Municipal Operations

Description

Responsibly managing common chemicals, such as fertilizers, solvents, paints, cleaners, and automotive products, can significantly reduce polluted runoff (WEF and ASCE, 1998). Such products must be handled properly in all stages of their useful lives. Materials management entails the selection of the individual product, the correct use and storage of the product, and the responsible disposal of associated waste(s).

Applicability

In many cases, industries can implement simple housekeeping practices in order to manage materials more effectively. Proper management reduces the likelihood of accidental spills or releases of hazardous materials during storm events. In addition, health and safety conditions at the facility will improve.

Some simple practices for managing materials are improving maintenance of industrial machinery, establishing material storage and inventory controls, improving routine cleaning and inspection of facilities where materials are stored or processed, maintaining organized workplaces, and educating employees about the benefits of the above practices (USEPA, 1992).

Maintenance Considerations

Maintenance associated with materials management should be designed to minimize the amounts of materials used and the wastes generated by industrial processes. Procedures for operation and maintenance can easily be integrated into an industry's management plan. Simple processes, such as routine cleaning of work spaces, proper collection and disposal of wastes, maintenance of machinery, regular inspections of equipment and facilities, and training employees to respond to spills or leaks, have significant effects on reducing storm water runoff.

Another consideration is regular material inventories. Such inventories reduce the occurrence of overstocking hazardous materials, increase knowledge about what hazardous materials are present and how they are stored, and provide documentation of proper handling of hazardous materials. An inventory of hazardous materials present at a particular site consists of three major steps (USEPA, 1992):

- Identify all hazardous and nonhazardous substances present in a facility. This can be accomplished by reviewing all purchase orders for the facility and walking through the facility itself. Compile a list of all chemicals present in a facility and obtain a Material Safety Data Sheet (MSDS) for each one.
- Label all containers with the name of the chemical, unit number, expiration date, handling instructions, and health or environmental hazards. Much of this information will be found on the MSDS. Often, insufficient labeling leads to improper handling or disposal of hazardous substances.
- Make special note on the inventory of hazardous chemicals that require special handling, storage, or disposal.

Cost Considerations

The major costs of these BMPs can be attributed to additional labor. Depending on the extent of the program, varying amounts of staff hours will be required for the necessary education of municipal employees, local businesses, and the public. In addition, posters and bulletin boards that encourage the proper management of materials should be displayed throughout the facility.

References

WEF and the ASCE. 1998. *Urban Runoff Quality Management*. WEF Manual of Practice No. 23 and ASCE Manual and Report on Engineering Practice No. 87. Water Environment Federation, Technical Practice Committee, Water Quality and Ecology Subcommittee, Alexandria, VA, and American Society of Civil Engineers, Urban Water Resources Research Council, Reston, VA.

USEPA. 1992. *Storm Water Management for Industrial Activities*. U.S. Environmental Protection Agency, Office of Water, Washington, DC.

Sodding

Construction Site Storm Water Runoff Control

Description

Sodding is a permanent erosion control practice that involves laying a continuous cover of grass sod on exposed soils. In addition to stabilizing soils, sodding can reduce the velocity of storm water runoff. Sodding can provide immediate vegetative cover for critical areas and stabilize areas that cannot be vegetated by seed. It also can stabilize channels or swales that convey concentrated flows and can reduce flow velocities.

Grass sod is laid on exposed soil to stabilize the soil and to reduce the velocity of storm water runoff (Source: Landscape USA, no date)

Applicability

Sodding is appropriate for any graded or cleared area that might erode, requiring immediate vegetative cover. Locations particularly well-suited to sod stabilization are:

- Residential or commercial lawns and golf courses where prompt use and aesthetics are important
- Steeply-sloped areas
- Waterways and channels carrying intermittent flow
- Areas around drop inlets that require stabilization.

Siting and Design Considerations

Sodding eliminates the need for seeding and mulching and produces more reliable results with less maintenance. Sod can be laid during times of the year when seeded grasses are likely to fail. The sod must be watered frequently within the first few weeks of installation.

The type of sod selected should be composed of plants adapted to site conditions. Sod composition should reflect environmental conditions as well as the function of the area where the sod will be laid. The sod should be of known genetic origin and be free of noxious weeds, diseases, and insects. The sod should be machine cut at a uniform soil thickness of 15 to 25 mm at the time of establishment (this does not include top growth or thatch). Soil preparation and additions of lime and fertilizer may be needed; soils should be tested to determine if amendments are needed. Sod should be laid in strips perpendicular to the direction of waterflow and staggered in a brick-like pattern. The corners and middle of each strip should be stapled firmly. Jute or plastic netting may be pegged over the sod for further protection against washout during establishment. Areas to be sodded should be cleared of trash, debris, roots, branches, stones and clods larger than 2 inches in diameter. Sod should be harvested, delivered, and installed within a period of 36 hours. Sod not transplanted within this period should be inspected and approved prior to its installation.

Limitations

Compared to seed, sod is more expensive and more difficult to obtain, transport, and store. Care must be taken to prepare the soil and provide adequate moisture before, during, and after installation to ensure successful establishment. If sod is laid on poorly prepared soil or unsuitable surface, the grass will die quickly because it is unable to root. Sod that is not adequately irrigated after installation may cause root dieback because grass does not root rapidly and is subject to drying out.

Maintenance Considerations

Watering is very important to maintain adequate moisture in the root zone and to prevent dormancy, especially within the first few weeks of installation, until it is fully rooted. Mowing should not result in the removal of more than one-third of the shoot. Grass height should be maintained between 2 and 3 inches. After the first growing season, sod might require additional fertilization or liming. Permanent, fine turf areas require yearly maintenance fertilization. Warm-season grass should be fertilized in late spring to early summer, and cool-season grass, in late winter and again in early fall.

Effectiveness

Sod has been shown to remove up to 99 percent of total suspended solids in runoff. It is therefore a highly effective management practice for erosion and sediment control, but its trapping efficiency is highly variable depending on hydrologic, hydraulic, vegetation, and sediment characteristics.

Cost Considerations

Average construction costs of sod average $0.20 per square foot and range from $0.10 to $1.10 per square foot; maintenance costs are approximately 5 percent of installation costs (USEPA, 1993).

References

FHWA. 1995. *Best Management Practices for Erosion and Sediment Control*. FHWA-SLP-94-005. Federal Highway Administration, Sterling, VA.

Landscape USA. No date. *Installing Sod for an Instant Lawn*. [www.landscapeusa.com/tips/turf.htm]. Accessed January 2001.

Smolen, M.D., D.W. Miller, L.C. Wyall, J. Lichthardt, and A.L. Lanier. 1988. *Erosion and Sediment Control Planning and Design Manual*. North Carolina Sedimentation Control Commission, North Carolina Department of Environment, Health, and Natural Resources, and Division of Land Resources Land Quality Section, Raleigh, NC.

USEPA. 1993. *Guidance Specifying Management Measures for Sources of Nonpoint Pollution in Coastal Waters*. EPA 840-B-92-002. U.S. Environmental Protection Agency, Office of Water, Washington, DC.

USEPA. 1992. Storm Water Management for Industrial Activities: Developing Pollution Prevention Plans and Best Management Practices. U.S. Environmental Protection Agency, Office of Water, Washington, DC.

Spill Prevention and Control Plan

Construction Site Storm Water Runoff Control

Description

Spill prevention and control plans should clearly state measures to stop the source of a spill, contain the spill, clean up the spill, dispose of contaminated materials, and train personnel to prevent and control future spills.

Absorbent snakes can be used to protect storm drains from spills (Spill911, no date)

Applicability

Spill prevention and control plans are applicable to construction sites where hazardous wastes are stored or used. Hazardous wastes include pesticides, paints, cleaners, petroleum products, fertilizers, and solvents.

Siting and Design Considerations

Identify potential spill or source areas, such as loading and unloading, storage, and processing areas, places where dust or particulate matter is generated, and areas designated for waste disposal. Also, spill potential should be evaluated for stationary facilities, including manufacturing areas, warehouses, service stations, parking lots, and access roads.

Define material handling procedures and storage requirements, and take actions to reduce spill potential and impacts on storm water quality. This can be achieved by

- Recycling, reclaiming, or reusing process materials and thereby reducing the amount of process materials that are brought into the facility
- Installing leak detection devices, overflow controls, and diversion berms
- Disconnecting any drains from processing areas that lead to the storm sewer
- Performing preventative maintenance on storm tanks, valves, pumps, pipes, and other equipment
- Using material transfer procedures or filling procedures for tanks and other equipment that minimize spills
- Substituting less or non-toxic materials for toxic materials.

Provide documentation of spill response equipment and procedures to be used, ensuring that procedures are clear and concise. Give step-by-step instructions for the response to spills at a particular facility. This spill response plan can be presented as a procedural handbook or a sign. The spill response plan should

- Identify individuals responsible for implementing the plan
- Define safety measures to be taken with each kind of waste
- Specify how to notify appropriate authorities, such as police and fire departments, hospitals, or publicly owned treatment works for assistance
- State procedures for containing, diverting, isolating, and cleaning up the spill
- Describe spill response equipment to be used, including safety and cleanup equipment.

Limitations

A spill prevention and control plan must be well planned and clearly defined so that the likelihood of accidental spills can be reduced and any spills that do occur can be dealt with quickly and effectively. Training might be necessary to ensure that all workers are knowledgeable enough to follow procedures. Equipment and materials for cleanup must be readily accessible and clearly marked for workers to be able to follow procedures.

Maintenance Considerations

Update the spill prevention and control plan to accommodate any changes in the site or procedures. Regularly inspect areas where spills might occur to ensure that procedures are posted and cleanup equipment is readily available.

Effectiveness

A spill prevention and control plan can be highly effective at reducing the risk of surface and ground water contamination. However, the plan's effectiveness is enhanced by worker training, availability of materials and equipment for cleanup, and extra time spent by management to ensure that procedures are followed.

Cost Considerations

Spill prevention and control plans are inexpensive to implement. However, extra time is needed to properly handle and dispose of spills, which results in increased labor costs.

References

Spill911. No date. *Spill Containment: Oil and Sediment Curbguard.* [www.spill911.com/acb1/showdetl.cfm?&DID=61&Product_ID =982&CATID=5]. Accessed January 2001.

USEPA. 1992. *Storm Water Management for Construction Activities: Developing Pollution Prevention Plans and Best Management Practices.* EPA 832-R-92-005. U.S. Environmental Protection Agency, Office of Water, Washington, DC.

USEPA. 1992. Storm Water Management for Industrial Activities: Developing Pollution Prevention Plans and Best Management Practices. EPA 832-R-92-006. U.S. Environmental Protection Agency, Office of Water, Washington, DC.