RESIDENTIAL PATIO B-8

Development Services
Building Division
1635 Faraday Avenue
760-602-2719
www.carlsbadca.gov

Patio covers are one story, roofed structures not more than 12 feet above grade and used for outdoor recreational purposes. A building permit is required for all *attached* residential patio covers. *Detached* residential patio covers that are 120 square feet of roof area or less, do not require a permit. *All patio covers*, of any size, need to comply with the Zoning Ordinance, including building setbacks, structure separation requirements and lot coverage. This hand out describes what plans are necessary to secure a patio cover permit. To assist you, there is a sample of a plot plan, span tables for joists, and beams, and a footing schedule for foundation requirements. There are also connection details to use for typical connections. You may use this handout in lieu of a separate design when the patio cover is attached to the house on one complete side. *If you design the patio cover yourself, or your patio cover is either free-standing or outside the span table limits in this handout, please provide a foundation plan, framing details, and other details and elevations to show the extent of the proposed work. A lateral analysis may be required for free-standing patio covers.*

If you use the attached tables and plans, please submit the following:

1. Two Identical Site Plans showing:

a) Property lines with dimensions.
b) Proposed roof area of the patio cover.
c) Distances from posts to property lines.
d) All existing structures on the property.
e) Indicate the dimensions of the patio cover and the total roofed area.
f) Any easements on the property.
g) Show slopes or topography of the lot.
h) Indicate percentage of lot coverage.

2. A Building Permit Application with the following:

a) Name of the property owner.
b) Home Phone Number
c) Site address, assessor's parcel number, lot number, subdivision name or number.
d) Contractor's name, State License Number and City Business License Number; or an Owner-Builder Declaration Form (Available at the Building Division Counter).
e) Copy of Worker's Compensation Certificate
f) Signature of Applicant

If you are applying for a building permit in the Coastal Zone, you may need a Coastal Development Permit or an exemption. Contact the Planning Division for details. A Coastal Zone map is part of this handout. If you are applying for a building permit in a subdivision with a homeowner's association, you should secure architectural review prior to proceeding with the project. The City does not enforce or specifically review provisions of homeowners' association CC&R's. HOA requirements may be different than City requirements. If your home is part of a Planned Unit Development or a condominium, please see text of this handout.

TYPICAL R-1 PLOT PLAN

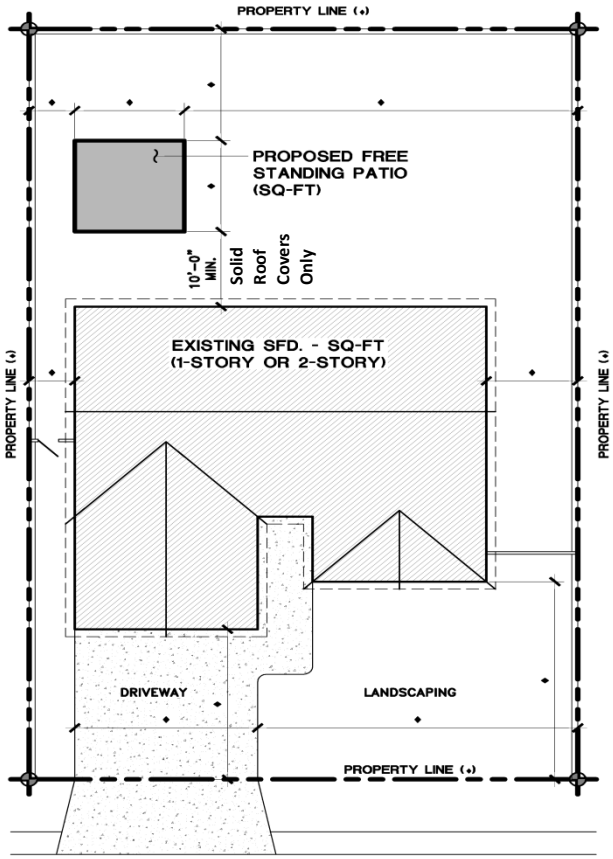

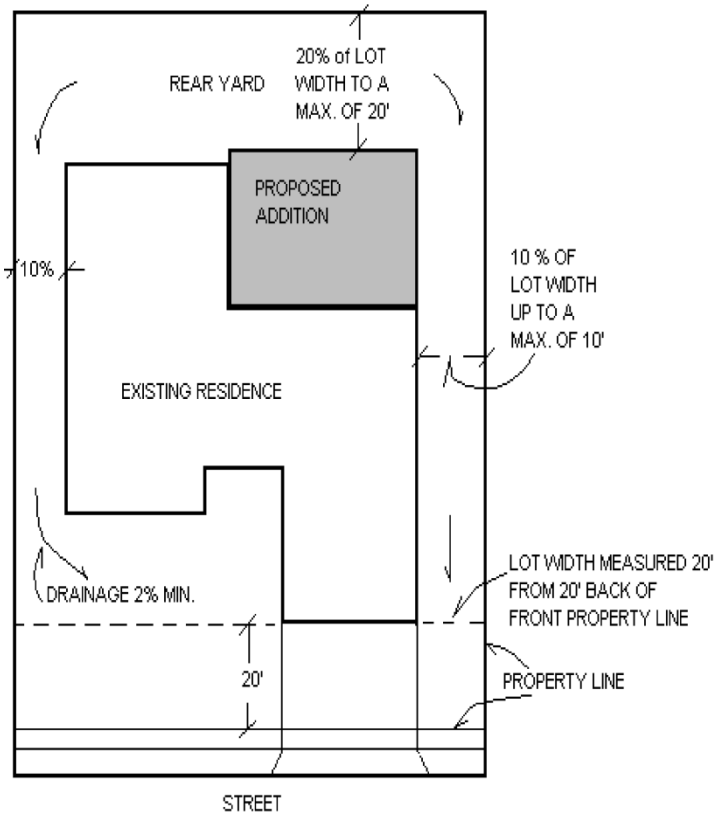

Setbacks shown are for R-1 parcels. **Front Yard** = 20' from the front property line. **Interior side yard** = 10% of lot width up to a maximum of 10'. (Min. 5'). **Street side yard** = 10'. **Rear yard** – 20% of lot width up to a maximum of 20' (Min. 10').

Maximum lot coverage = 40%. Include solid roof patios, attached or detached in the calculation. Contact the Planning Division (760-602-4610) for information on corner lots, lots with unusual configurations, lots within Planned Communities, accessory structures and building heights.

Solid Roof Patios – If roofing to be applied is TILE use the next, larger span/spacing on the following tables.

Minimum Square Footing Sizes (inches)[1,2]

Post Spacing	Rafter Span (in feet)							
	6	8	10	12	14	16	18	20
4	12	12	12	12	12	12	12	12
6	12	12	12	12	12	12	12	14
8	12	12	12	12	12	14	14	14
10	12	12	12	14	14	14	16	16
12	12	12	14	14	16	16	18	18
14	12	12	14	16	16	18	18	20
16	12	14	14	16	18	18	20	20
18	12	14	16	18	18	20	20	22
20	14	14	16	18	20	20	22	24

1. Assumes 1,000 psf soil bearing capacity

2. The minimum depth for all footings is 12 inches into natural grade

Minimum Rafter Sizes

Rafter Span	Rafter Spacing - Center to Center (in inches)			
	12" (5/16" ply-wood sheathing)	**16"** (1/2" ply-wood sheathing)	**24"** (1/2" ply-wood sheathing)	**32"** (5/8" ply-wood sheathing)
6	2 x 4	2 x 4	2 x 4	2 x 4
7	2 x 4	2 x 4	2 x 4	2 x 4
8	2 x 4	2 x 4	2 x 6	2 x 6
9	2 x 4	2 x 6	2 x 6	2 x 6
10	2 x 6	2 x 6	2 x 6	2 x 6
11	2 x 6	2 x 6	2 x 6	2 x 8
12	2 x 6	2 x 6	2 x 6	2 x 8
13	2 x 6	2 x 6	2 x 8	2 x 8
14	2 x 6	2 x 6	2 x 8	2 x 8
15	2 x 6	2 x 8	2 x 8	2 x 10
16	2 x 8	2 x 8	2 x 8	2 x 10
17	2 x 8	2 x 8	2 x 10	2 x 10
18	2 x 8	2 x 8	2 x 10	2 x 10
19	2 x 8	2 x 10	2 x 10	2 x 12
20	2 x 8	2 x 10	2 x 10	2 x 12

Minimum Beam Sizes

Post Spacing	Rafter Span (in feet)								
	4	**6**	**8**	**10**	**12**	**14**	**16**	**18**	**20**
4	4 x 4	4 x 4	4 x 4	4 x 4	4 x 4	4 x 4	4 x 4	4 x 4	4 x 4
6	4 x 4	4 x 4	4 x 4	4 x 4	4 x 4	4 x 4	4 x 4	4 x 4	4 x 6
8	4 x 4	4 x 4	4 x 6	4 x 6	4 x 6	4 x 6	4 x 6	4 x 6	4 x 6
10	4 x 4	4 x 6	4 x 6	4 x 6	4 x 6	4 x 6	4 x 8	4 x 8	4 x 8
12	4 x 6	4 x 6	4 x 8	4 x 8	4 x 8	4 x 8 6 x 8	4 x 8 6 x 8	4 x 8 6 x 8	4 x 10 6 x 8
14	4 x 6	4 x 8	4 x 8	4 x 8	4 x 8 6 x 8	4 x 10 6 x 8	4 x 10 6 x 10	4 x 10 6 x 10	4 x 10 6 x 10
16	4 x 8	4 x 8	4 x 8 6 x 8	4 x 10 6 x 8	4 x 10 6 x 8	4 x 10 6 x 10	4 x 12 6 x 10	4 x 12 6 x 10	4 x 14 6 x 10
18	4 x 8	4 x 8 6 x 8	4 x 10 6 x 8	4 x 10 6 x 8	4 x 10 6 x 10	4 x 12 6 x 10	4 x 12 6 x 10	4 x 14 6 x 12	4 x 14 6 x 12
20	4 x 8 6 x 8	4 x 10 6 x 8	4 x 10 6 x 10	4 x 12 6 x 10	4 x 12 6 x 10	4 x 14 6 x 12	4 x 14 6 x 12	6 x 12	6 x 14

Figure 2 / Typical Patio

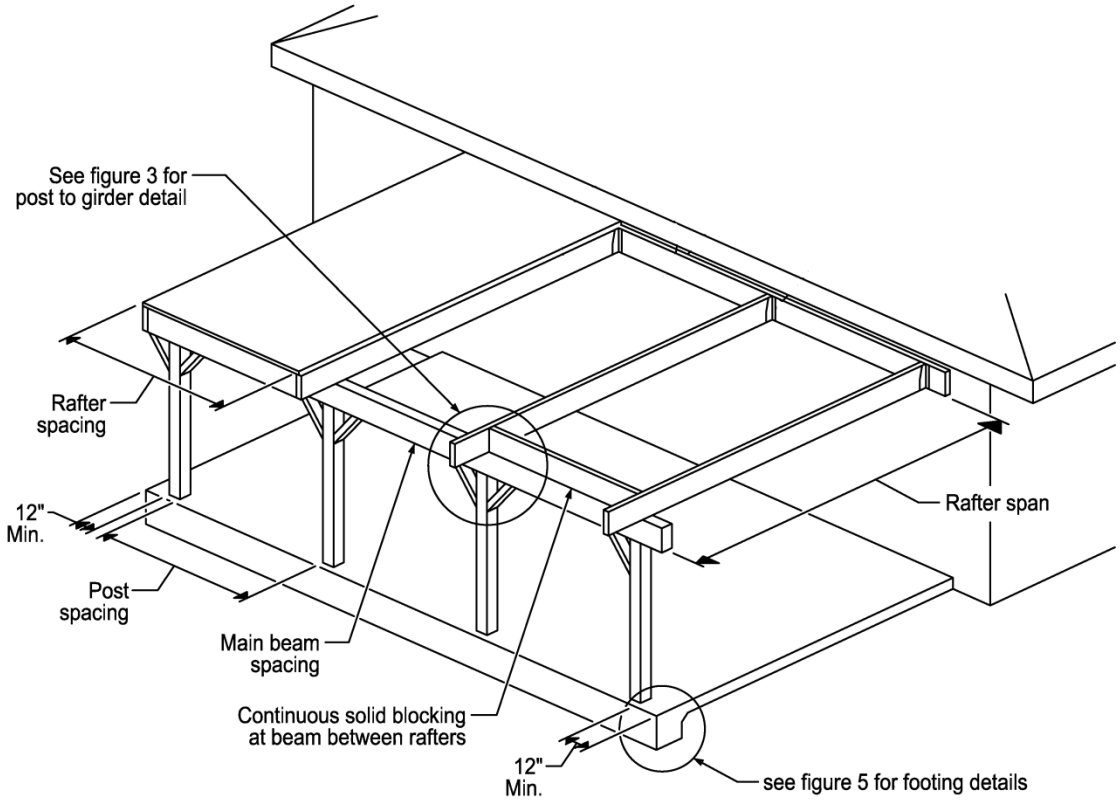

Figure 3 / Post-to-Girder Connection

Case 1 / Connection, Interior Condition **Case 2 / Interior Condition**

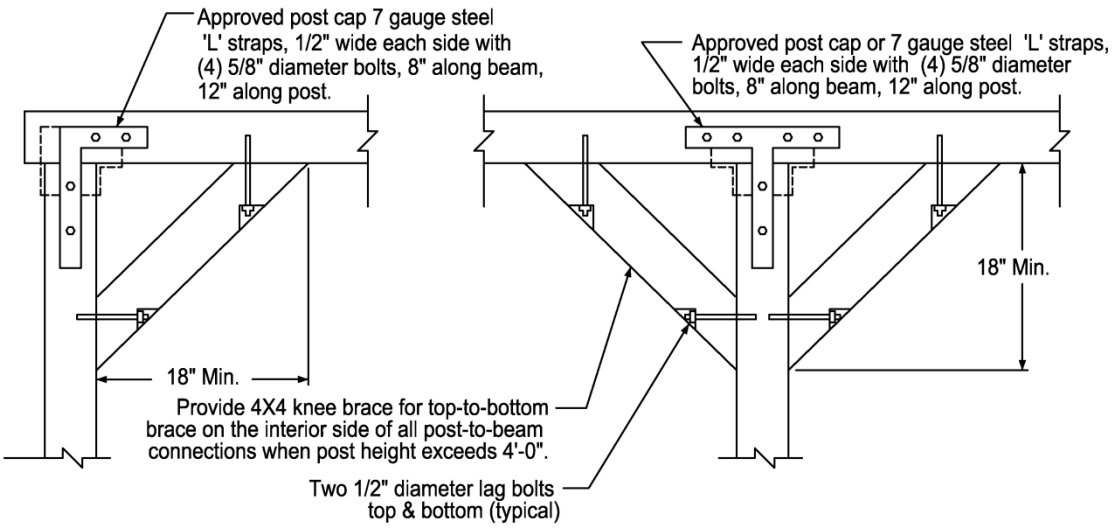

Figure 4/ Section View of Patio

A / Attached Patio

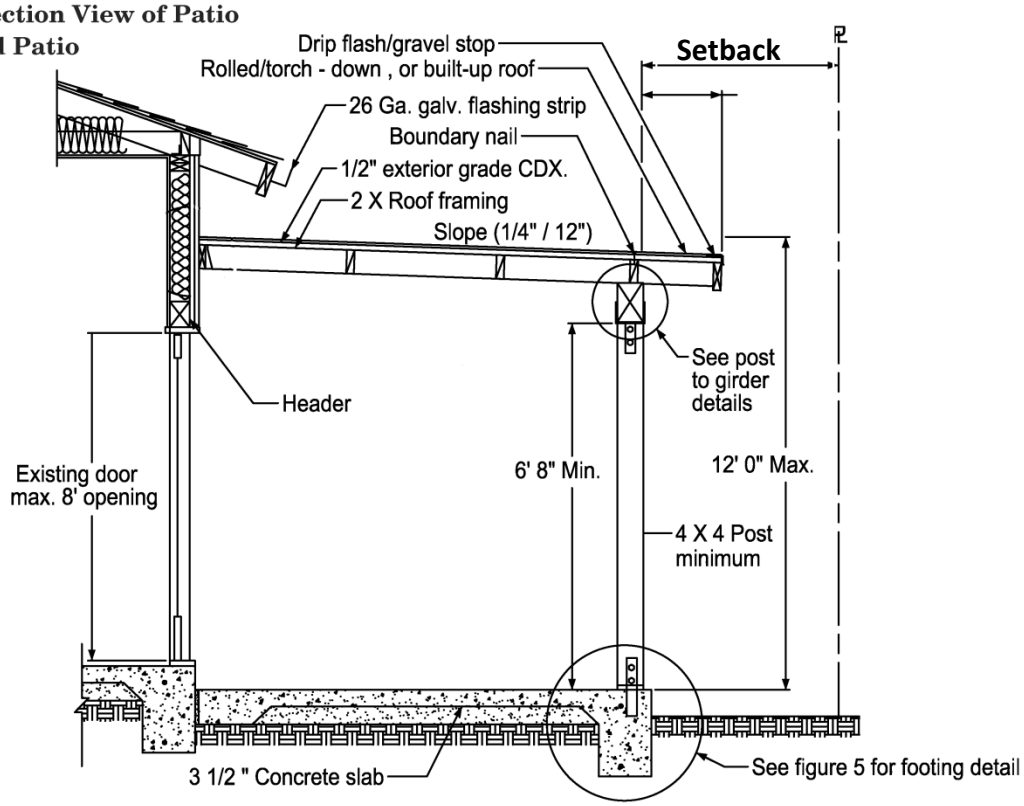

B / Detached Patio

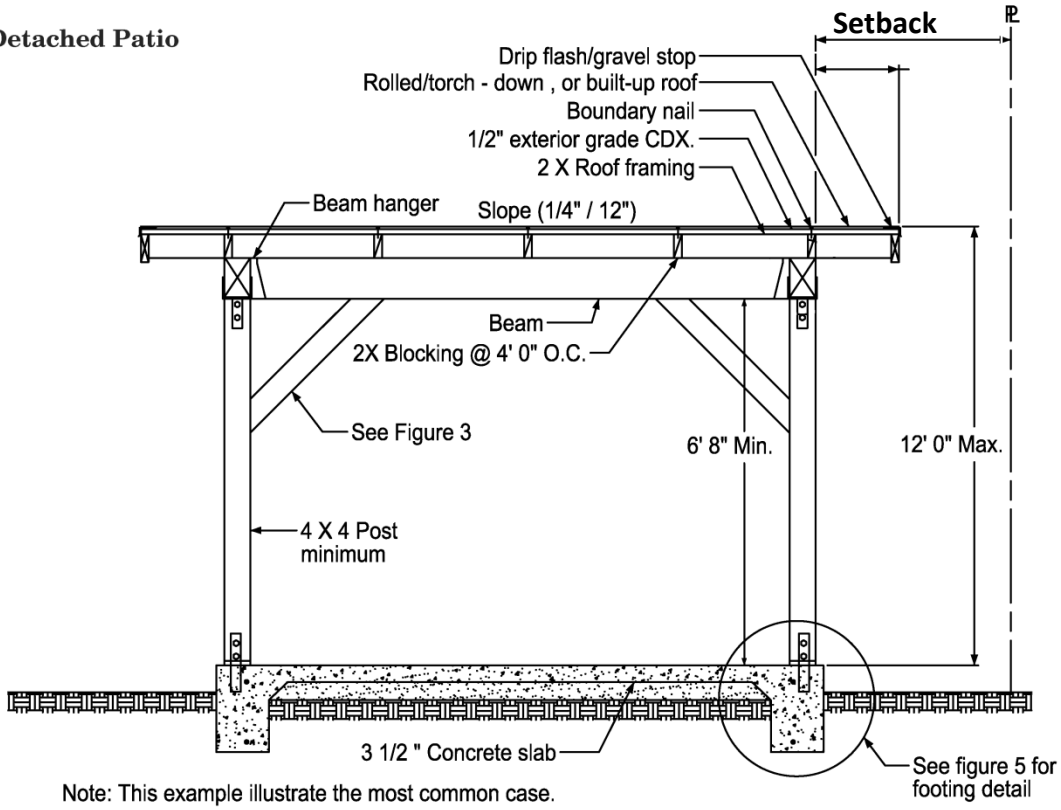

Note: This example illustrate the most common case.

Figure 5 / Typical Footing Details

Case 1 / Pier Footing

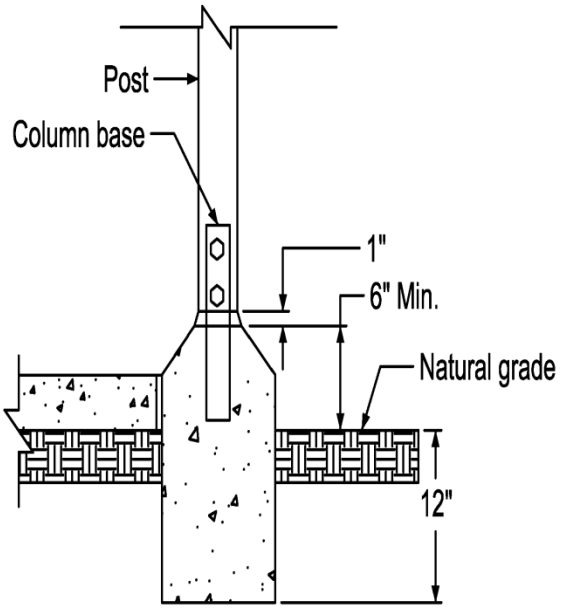

Case 2 / Continuous Footing

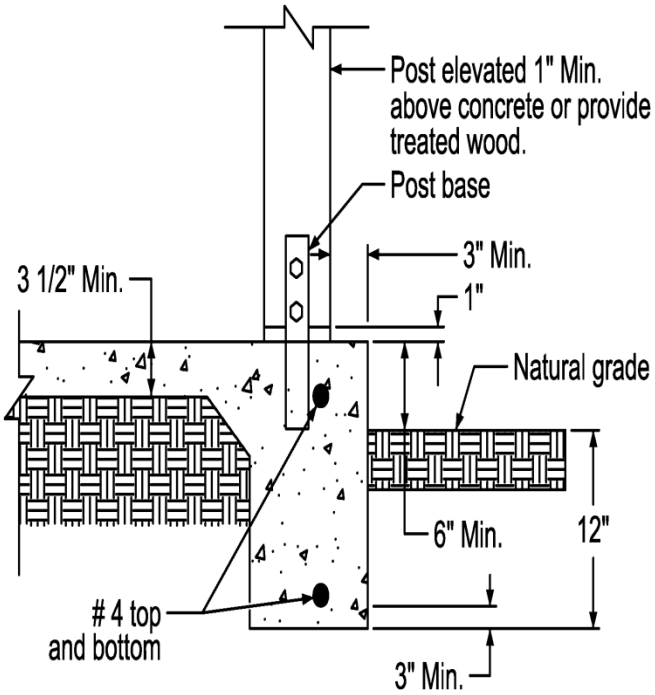

Case 3 / Slab Footing

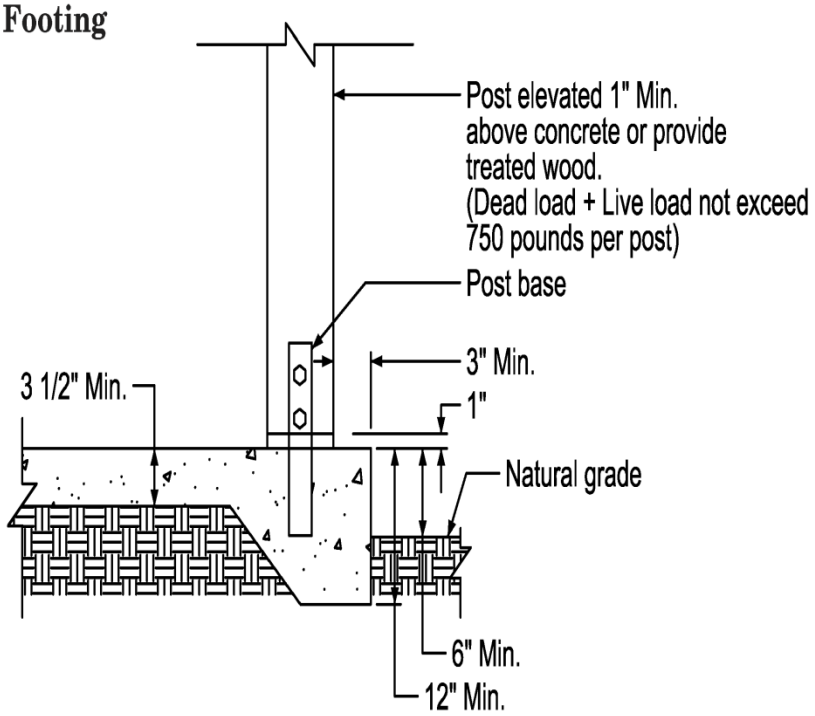

PATIO COVER CONSTRUCTION SPECIFICATIONS

1. Concrete

All concrete for footings must be a minimum of 2,000 psi.

2. Lumber

Lumber must be Douglas Fir-larch No.2 or Better. Lumber must be grade marked. All posts must be a minimum of 4x4 and may be required to be protected from decay and termites if within 8” of finish grade.

3. Connections

Post anchorage shall be accomplished with a standard manufactured post base installed per the manufacturer’s instructions. Footings are required when the post supports a load exceeding 750 pounds. For lesser loads, a 3 ½” slab on grade section may be substituted for required footings.

When the house is used to support one end of the patio cover, the main beam may be replaced on the side attached to the house by a ledger. The ledger shall be the same size as the rafters and fastened to the structural frame of the house by ½” x 5” lag screws spaced at 32” on center for rafters up to a 10’ span. Lag screws must be spaced at 16” on center for rafters between 10’1” and 20’. Rafters may not be solely supported by the existing rafter tails or facia of the house.

4. Patio Enclosures

Patios may be enclosed as long as the following criteria is followed:

a) Enclosure walls shall be permitted to be of any configuration, provided the open or glazed area of the longer wall and one additional wall is equal to at least 65 percent of the area below a minimum of 6 feet 8 inches (2032mm) of each wall, measured from the floor. Openings shall be permitted to be enclosed with (1) insect screening, (2) *approved* translucent or transparent plastic not more than 0.125 inch (3.2 mm) in thickness, (3) glass conforming to the provisions of Section R308, or (4) any combination of the foregoing.

b) Patio covers shall be used only for recreational, outdoor living purposes and not as carports, garages, storage rooms or habitable rooms.

c) Exterior openings required for light and ventilation shall be permitted to open into a patio structure conforming to Section AH101, provided that the patio structure shall be unenclosed if such openings are serving as emergency egress or rescue openings from sleeping rooms. Where such exterior openings serve as an exit from the *dwelling unit*, the patio structure, unless unenclosed, shall be provided with exits conforming to the provisions of Section R310 of this code.

5. Tables

The above span and footing tables make the following assumptions:

a) Roof live load is 10 psf
b) Roof dead load is 7 psf
c) All lumber is Douglas fir-larch No.2 or better;
d) Repetitive member use
e) All posts are 4x4 minimum
f) Soil bearing pressure is 1000 psf minimum

6. Electrical

All electrical work in a patio cover or enclosure shall be weather tight as for exterior installations.

7. Inspections

a) Normally two inspections of a patio cover are required:
b) When footings have been excavated but before concrete has been placed, (note: photographs of footings are not an acceptable substitute for an inspection of required footings).
c) When all structural framing is completed. If solid roof sheathing is installed over the framing, a roof nailing inspection is required prior to placing the roof covering.
d) Note: The project is not legally complete until the inspector of record signs the space on the job record card as final.
e) The job record card and approved plans must be available for all inspections. The job record card and approved plans should then be retained by the owner as a record of the approved construction.

8. Patio covers in PUD's and Condominium projects

Please call the Planning Division (760-602-4610) for site specific information.